AN 01-245FCA-4

Illustrated Parts Breakdown

NAVY MODEL

F3H-1N

AIRPLANES

PUBLISHED UNDER AUTHORITY OF THE SECRETARY OF THE AIR FORCE AND THE CHIEF OF THE BUREAU OF AERONAUTICS

15 September 1954

Reproduction for non-military use of the information or illustrations contained in this publication is not permitted without specific approval of the issuing service (BuAer or AMC). The policy for use of Classified Publications is established for the Air Force in AFR 205-1 and for the Navy in Navy Regulations, Article 1509.

LIST OF REVISED PAGES ISSUED

INSERT LATEST REVISED PAGES. DESTROY SUPERSEDED PAGES.

NOTE: The portion of the text affected by the current revision is indicated by a vertical line in the outer margins of the page.

* The asterisk indicates pages revised, added or deleted by the current revision.

BuAer

ADDITIONAL COPIES OF THIS PUBLICATION MAY BE OBTAINED AS FOLLOWS:

USAF ACTIVITIES.—In accordance with Technical Order No. 00-5-2.
NAVY ACTIVITIES.—Submit request to nearest supply point listed below, using form NavAer-140; NASD, Philadelphia, Pa.; NAS, Alameda, Calif.; NAS, Jacksonville, Fla.; NAS, Norfolk, Va.; NAS, San Diego, Calif.; NAS, Seattle, Wash.; ASD, NSC, Guam.
For listing of available material and details of distribution see Naval Aeronautics Publications Index NavAer 00-500.

TABLE OF CONTENTS

Section	Page Number
I INTRODUCTION	1
Master "Usable On" Code	
Manufacturers Code Symbols	
F3H-1N Airplane General Assembly	
II GROUP ASSEMBLY PARTS LIST	15
OUTER WING GROUP	16
Outer Wing Installation	16
Outer Wing Aileron Installation	20
Outer Structural Wing Assembly	22
Outer Wing Leading Edge Assembly	28
Outer Wing Slat Forward and Aft Carriage Assemblies	32
Outer Wing Leading Edge Slat Assembly (Sheet 1 of 2)	34
Outer Wing Leading Edge Slat Assembly (Sheet 2 of 2)	35
Outer Wing Slat Controls Installation	40
Wing Slat Screw Jack Assembly	42
Outer Wing Surface Controls Installation	44
Outer Wing Hydraulic Installation	48
Wing Fold Actuator Assembly	50
Outer Wing Wiring Installation	52
INNER WING GROUP	54
Inner Wing Panel Installation	54
Inner Wing Assembly	60
Trailing Edge Flap Installation	62
Inner Wing Leading Edge Slat Assembly (Sheet 1 of 2)	64
Inner Wing Leading Edge Slat Assembly (Sheet 2 of 2)	65
Inner Structural Wing Assembly (Sheet 1 of 3)	68
Inner Structural Wing Assembly (Sheet 2 of 3)	70
Inner Structural Wing Assembly (Sheet 3 of 3)	72
Inner Wing Fold Seal Assembly	78
Inner Wing Leading Edge Assembly	80
Inner Wing Slat Forward and Aft Carriage Assemblies	86
Inner Wing Trailing Edge Assembly	88
Pin Pull Mechanism and Wing Fold Warning Flag Installations	92
Wing Fold Pin Pull Cylinder Assembly	95
Inner Wing Slat Controls Installation	96
Inner Wing Surface Controls Installation	98
Inner Wing Hydraulic Installation (Leading Edge)	102
Inner Wing Hydraulic Installation (Center and Aft Area) (Sheet 1 of 2)	104
Inner Wing Hydraulic Installation (Center and Aft Area) (Sheet 2 of 2)	105
Main Landing Gear Actuating, and Up Lock Actuating Cylinder Assemblies	112
Main Landing Gear Door Actuating Cylinder Assembly	114
Wing Flap Actuator Assembly	115
Main Landing Gear Up Latch Assembly	116
Wing Flap Position Transmitter Installation	119
Inner Wing Wiring Installation	120
Inner Wing Fuel System Installation	122
Inner Wing Fuel Tanks Installation	126
TAIL GROUP	130
Horizontal Stabilator Installation	130
Horizontal Stabilator Installation	134
Fin Installation	136
Rudder Installation	140
REMOVABLE NOSE GROUP	142
Removable Nose Assembly	142
Removable Nose Radar Equipment Installation	144
Structural Removable Nose Assembly	148
FORWARD FUSELAGE GROUP	150
Forward Fuselage Installation	150
Forward Structural Fuselage Assembly	152
Forward Fuselage Left Side Panel Assembly (Sheet 1 of 2)	156
Forward Fuselage Left Side Panel Assembly (Sheet 2 of 2)	160
Forward Fuselage Right Side Panel Assembly (Sheet 1 of 2)	166
Forward Fuselage Right Side Panel Assembly (Sheet 2 of 2)	170
Gun Compartment Door Assembly	174
Formation Light Door Assembly	177
Radar Computer Bay and Equipment Compartment Access Door Assemblies	178
Windshield Assembly	182
Cockpit Access Step Installation	184
Canopy Assembly	186
Canopy Emergency Controls Installation	190
Forward Fuselage Surface Controls Installation	196
Control Stick Installation	202
Rudder and Brake Pedal Assembly	204
Aileron Feel System Spring Cartridge Assembly	207
Forward Fuselage Auxiliary Controls Installation	208
Fuselage Wing Slat Controls Installation	210

Section — Page Number

Forward Fuselage Engine Controls Installation. 214
Canopy Mechanism Pneumatic Installation. 216
MK 12 Gun Pneumatic Installation (Gun Ready, Gun Buffer, Gun Charge and Gun Bay Vent Door) 218
MK 12 Gun Pneumatic Installation (Gun Feeder) 222
Forward Fuselage Heat and Ventilating System Equipment Installation 226
Refrigeration and Flow Control Unit Assembly 229
Oxygen System Installation 230
Pitot and Static System Installation. 232
Forward Fuselage Hydraulic and Emergency Air Installation (Canted Fuselage Station 88 to Fuselage Station 160) 236
Forward Fuselage Hydraulic and Emergency Air Installation (Fuselage Station 160 to Fuselage Station 232). 240
Forward Fuselage Hydraulic and Emergency Air Installation (Forward Side of Bulkhead, Fuselage Station 232.0). 244
Gun Camera Installation 246
Cockpit Furnishings Installation 248
Left Hand Console Equipment Installation . 252
Engine Power Quadrant Installation 254
Left Hand Console Sub Instrument Panel Assembly 257
Engine Control Inboard Panel Assembly . . 258
Engine Control Outboard Panel Assembly . 259
Right Hand Console Equipment Installation (Sheet 1 of 2) 260
Right Hand Console Equipment Installation (Sheet 2 of 2) 261
Right Hand Console Sub-Instrument Panel Assembly 264
Main Instrument Panel Assembly. 266
Sub-Instrument Panel Assembly 272
Radar and Gun Sight Installation 274
Circuit Breaker Panels and Cover Assemblies 278
Landing Gear Control Installation 280
Canopy Emergency Handle and Arresting Gear Control Assemblies 284
Pilot's Ejection Seat Installation 286
Pilot's Ejection Seat Assembly. 290
Ejection Seat Electrical Installation 292
Ejection Seat Canopy Pre-Ejection and Inertia Reel Controls Installations 294
Ejection Seat Frame Assembly. 296
Ejection Seat Headrest Assembly. 300
Cockpit Oxygen, Anti-Blackout, Pitot, Static and Turn and Bank Installations . . 302
Cockpit Heat and Ventilation Equipment Installation. 304
Forward Fuselage Electrical Equipment Installation. 308
Forward Fuselage Battery Installation. . . 312
Left and Right Equipment Compartment Fuse, Circuit Breaker, and Relay Panel Assemblies 314
AN/ARN-6 Radio Equipment Installation. . 316

Section — Page Number

Forward Shelf Electrical Equipment Installations 320
Aft Shelf Electrical Equipment Installations 322
Forward Fuselage Wiring Equipment Installation (Sheet 1 of 2) 326
Forward Fuselage Wiring Equipment Installation (Sheet 2 of 2) 327
Forward Fuselage Wire Bundle Assemblies (Sheet 1 of 2). 330
Forward Fuselage Wire Bundle Assemblies (Sheet 2 of 2). 331
Forward Fuselage Forward Wire Bundle Assemblies 334
Forward Fuselage Aft Wire Bundle Assemblies 338
Forward Fuselage Electrical Installation Details. 342

CENTER FUSELAGE GROUP. 346
Center Section Fuselage Assembly. 346
Center Structural Fuselage Assembly . . . 350
Center Fuselage Left Side Panel Assembly (Sheet 1 of 2) 352
Center Fuselage Left Side Panel Assembly (Sheet 2 of 2) 354
Center Fuselage Right Side Panel Assembly (Sheet 1 of 2) 360
Center Fuselage Right Side Panel Assembly (Sheet 2 of 2) 362
Engine Auxiliary Air Door Assembly and Actuator Installation 366
Electrical Equipment and Hydraulic Lines Access Door Assemblies. 368
Hydraulic Compartment and Engine Upper Access Door Assemblies. 372
Engine Lower Access and Ram Air Pump Door Assemblies 374
Forward and Center Fuel Cell Access Door Assemblies 376
Center Fuselage Auxiliary Controls Installation. 380
Center Fuselage Surface Controls Installation. 382
Center Fuselage Engine Controls Installation. 386
Fuselage Fuel and Vent System Installation. 388
Forward Fuel Tank Installation. 390
Center Fuel Tank Installation (Sheet 1 of 2). 394
Center Fuel Tank Installation (Sheet 2 of 2). 395
Aft Fuel Tank Installation. 400
Engine Accessory Compartment Fuel System Installation 404
Engine Drains Installation 408
Engine Forward Mount Installation. 410
Accessory Cooling Installation 412
Engine Starter Air Duct Installation 414
Engine Air Inlet Duct Assembly 416
Electro Pump Hydraulic Installation 418
Ram Air Pump Hydraulic Installation . . . 420

Section	Page Number
Center Fuselage Hydraulic and Air Installation (Fuselage Station 232.4 to Fuselage Station 277.3) (Sheet 1 of 2)	424
Center Fuselage Hydraulic and Air Installation (Fuselage Station 232.4 to Fuselage Station 277.3) (Sheet 2 of 2)	426
Center Fuselage Hydraulic Installation (Engine Accessories Compartment, Upper and Left Side) (Sheet 1 of 2)	428
Center Fuselage Hydraulic Installation (Engine Accessories Compartment, Upper and Left Side) (Sheet 2 of 2)	430
Center Fuselage Hydraulic Installation (Engine Accessories Compartment, Lower Right Side) (Sheet 1 of 3)	436
Center Fuselage Hydraulic Installation (Engine Accessories Compartment, Lower Right Side) (Sheet 2 of 3)	438
Center Fuselage Hydraulic Installation (Engine Accessories Compartment, Lower Right Side) (Sheet 3 of 3)	440
Center Fuselage Hydraulic Installation (Fuselage Station 313.04 to Fuselage Station 434.00)	442
Hydraulic System Filter, Utility and Power Reservoir Assemblies	444
Center Fuselage Pneumatic Installation (Engine Accessories Compartment) (Sheet 1 of 2)	448
Center Fuselage Pneumatic Installation (Engine Accessories Compartment) (Sheet 2 of 2)	450
Center Fuselage Electrical Equipment Installation	454
Center Fuselage Electrical Wiring Installation (Sheet 1 of 2)	458
Center Fuselage Electrical Wiring Installation (Sheet 2 of 2)	460
AFT FUSELAGE GROUP	462
Aft Fuselage Installation	462
Aft Structural Fuselage Assembly	466
Aft Fuselage Upper Aft Structural Panel Assembly	468
Aft Fuselage Lower Structural Panel Assembly	472
Tail Cone Installation	475
Blast Cone Assembly	476
Tail Skid Installation	478
Speed Brake Installation	480
Aft Fuselage Stabilator and Rudder Controls Installation (Sheet 1 of 2)	482
Aft Fuselage Stabilator and Rudder Controls Installation (Sheet 2 of 2)	483
Stabilator Feel System Installation	490
Stabilator Feel System Spring Cartridge Assemblies	494
Stabilator Feel System Bellows Assembly	496
Stabilator Feel System Balance Assembly	498
Stabilator Viscous Damper Assembly	500
Feel System Viscous Damper Assemblies	502
Rudder Actuator Assembly	503
Rudder Feel System Installation	504
Rudder Feel System Spring Cartridge Assembly	506
Arresting Gear and Arresting Gear Latch Installations	508
Arresting Gear Shock Absorbing Cylinder Assembly	510
Aft Fuselage Hydraulic Installation (Fuselage Station 434.0 to Fuselage Station 498.0) (Sheet 1 of 2)	512
Aft Fuselage Hydraulic Installation (Fuselage Station 434.0 to Fuselage Station 498.0) (Sheet 2 of 2)	514
Aft Fuselage Hydraulic Installation (Aft of Fuselage Station 498.0)	518
Aft Fuselage Wiring Installation	520
Fuel Dump Tank Installation	522
Fuel Dump Tank Installation	523
Aft Fuselage Fuel Vent System Installation	524
Engine Aft Mount Installation	526
ARMAMENT GROUP	528
Armament Installation	528
Gun Installation	530
Ammunition Box Elevator Assembly and Hoist Installation	534
Ammunition Elevator Winch and Torque Tube Assemblies	538
Ammunition Box Assemblies	540
Ammunition Box Clutch Assemblies	542
Gun Heater Hose Installation	543
Gun Compartment Vent Installation	544
MK 12 MOD 0 20 MM Guns and Front and Rear Mount Assemblies	546
General Purpose Pylon Installation	550
General Stores Aft Pylon Nose Assembly	552
General Stores Aft Pylon Tail Assembly	554
General Stores Aft Pylon Center Section Assembly	556
ALIGHTING GEAR GROUP	560
Main Landing Gear Installation (Sheet 1 of 2)	560
Main Landing Gear Installation (Sheet 2 of 2)	561
Main Landing Gear Strut Assembly	566
Main Landing Gear Oleo Assembly	568
Main Landing Gear Brake Lines Installation	572
Main Landing Gear Strut and Fork Door Assemblies	574
Main Landing Gear Inboard and Drag Brace Door Mechanism Assemblies	578
Nose Landing Gear Installation	582
Nose Landing Gear Strut Assembly (Sheet 1 of 2)	584
Nose Landing Gear Strut Assembly (Sheet 2 of 2)	585
Nose Landing Gear Actuating Cylinder Assembly	589
Nose Landing Gear Shimmy Damper Assembly	590
Nose Landing Gear Door Assembly	592

Section	Page Number
Nose Landing Gear Drag Brace Link Assembly	594
POWER PLANT GROUP	596
Power Plant Installation (Equipment) and Quick Engine Change Assembly	596
Engine Piping Installation (Sheet 1 of 2)	598
Engine Piping Installation (Sheet 2 of 2)	600
Engine Fire Detection System	604
Engine Electrical Installation	606
Engine Mounts Installation	608
SPECIAL EQUIPMENT GROUP	612
Pilot's and Ventral Armor Plate Kits	612
SYSTEMS INDEX	616
Surface Controls System Index (Sheet 1 of 2)	616
Surface Controls System Index (Sheet 2 of 2)	617
Radio and Radar Systems Index (Sheet 1 of 2)	618
Radio and Radar Systems Index (Sheet 2 of 2)	619
Electrical System Index (Sheet 1 of 2)	620
Electrical System Index (Sheet 2 of 2)	621
High Pressure Air System Index (Sheet 1 of 2)	622
High Pressure Air System Index (Sheet 2 of 2)	623
Cockpit Heat, Vent and Pressurization Systems Index (Sheet 1 of 2)	624
Cockpit Heat, Vent and Pressurization Systems Index (Sheet 2 of 2)	625
Hydraulic System Index (Sheet 1 of 2)	626
Hydraulic System Index (Sheet 2 of 2)	627
Fuel System Index (Sheet 1 of 2)	628
Fuel System Index (Sheet 2 of 2)	629
Oxygen and Pitot and Static Systems Index	630
Auxiliary Controls and Engine Controls Systems Index	631
III NUMERICAL INDEX	
Numerical List of Special Tools and Equipment	634
Numerical Index - Contractor's Parts	635
Numerical Index - Standard and Vendor Parts	

SECTION I INTRODUCTION

1-1. GENERAL

This Illustrated Parts Breakdown is applicable to the Navy Model F3H-1N All-Weather Fighter Airplane manufactured by the McDonnell Aircraft Corporation, St. Louis, Missouri. This manual contains listings and illustrations of assemblies and details that are considered to be replacement parts for line maintenance, overhaul and repair, and is to be used as an aid in the procurement, requisitioning, storing, issuing and identification of new or reclaimed parts. The manual also shows which of the F3H-1N parts will be usable on the F3H-2N aircraft when they are delivered. However, information covering parts which can be used only on F3H-2N aircraft is not included in this issue, but will be added by later revisions to this manual, as will changes affecting F3H-1N parts. The general arrangement of the manual consists of:

Table of Contents
Section I - Introduction
Section II - Group Assembly Parts List
Section III - Numerical Index

1-2. TABLE OF CONTENTS

The Table of Contents at the front of the catalog lists the major groups and systems which make up the airplane and also shows the installations, assemblies, etc., which make up these groups and/or systems.

1-3. SECTION I - INTRODUCTION

1-4. PURPOSE

The Introduction serves two purposes; first, it explains the system used to number or identify the drawings and parts which make up the F3H series Airplanes and second, it explains the arrangement of parts information within Sections II and III of the catalog and how the catalog can best be used to provide desired information. The introduction also contains such general information as:

1. The Master "Usable On" code which has been established to relate parts usage to the various blocks of airplanes, portions of blocks or individual airplanes.

2. The name, address and code symbol of each manufacturer supplying parts used in the airplane.

3. An F3H-1N General Assembly Illustration showing the breakdown of the airplane into its major groups or components.

Note

A careful reading of this introduction NOW and reference to it in the future will greatly aid the user of this catalog in quickly obtaining correct parts information.

1-5. DRAWING AND PART NUMBERS

1-6. CONTRACTOR'S NUMBERING SYSTEM. Each part used on the airplane, whether a separate detail or an assembly, is represented by an engineering drawing which carries the same number as the part.

The system used to number these drawings has been so arranged that the various digits of the drawing number tie the part to a particular model, major component and system or group within a major component. The McDonnell numbering system for engineering drawings is as follows:

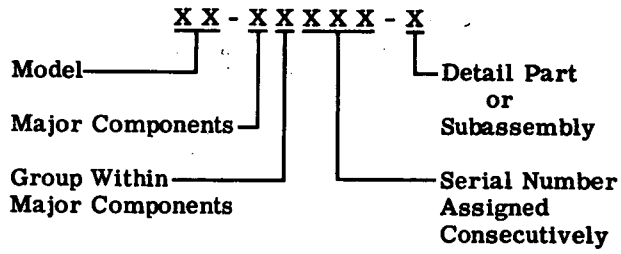

1-7. F3H MODEL AND DRAWING NUMBERS. The model number for the F3H series airplane is 25 and will precede the first dash. Numbers used to identify the major components, and groups within these components, have been assigned as follows:

11000 to 19999 - WING GROUP
21000 to 29999 - EMPENNAGE GROUP
30000 to 39999 - FUSELAGE GROUP
40000 to 49999 - LANDING GEAR GROUP
50000 to 53000 - POWER PLANT GROUP
54000 to 89000 - FIXED EQUIPMENT GROUP

SUB-GROUPS (FIXED EQUIPMENT)

54000 to 54999 - Engine Controls
56000 to 56999 - Engine Cooling
57000 to 57999 - Engine Lubrication
58000 to 58999 - Engine Fuel
59000 to 59999 - Engine Induction
60000 to 60999 - Instruments
61000 to 68999 - Surface Controls
69000 to 69999 - Hydraulic
70000 to 71999 - Armament
72000 to 72999 - Pneumatic
73000 to 73999 - External Stores
74000 to 79999 - Electrical
80000 to 85999 - Furnishings and Equipment
86000 to 86999 - Photographic
87000 to 87999 - Radio & Radar
91000 to 91999 - Special Stores
92000 to 92999 - In-flight Refueling

Many of the detail parts and subassemblies within a major component or group are not sufficiently complex to require a separate engineering drawing. However, for purposes of planning, manufacturing, differentiation between right and left, indication of various configurations of a basic part, etc., dash numbers are added to the basic part number.

1-8. OTHER MODEL AND DRAWING NUMBERS. A limited number of parts which were designed for other aircraft manufactured by McDonnell have been used on the F3H-1N. When such is the case, these parts retain their original part number and may be recognized by their model designation as follows:

Part No.	Model
4-XXXXX-X	FH-1
15-XXXXX-X	F2H-1, -2, -2B, -2N, -2P
19-XXXXX-X	XF3H-1
20-XXXXX-X	F101-A
23-XXXXX-X	F2H-3, -4

1-9. SECTION II - GROUP ASSEMBLY PARTS LIST

1-10. ARRANGEMENT

Section II is divided into the MAIN GROUPS OF THE AIRPLANE, SPECIAL EQUIPMENT, and the ILLUSTRATED SYSTEMS INDEX. This section is the main body of the book. Such information as part number, name, order of assembly, number of parts required per assembly, those airplanes on which a part can be used, etc., is given in this section. Exploded illustrations are provided to aid in the identification and location of parts. The individual parts which make up the complete airplane are not all assembled at one time. Instead, they are made into subassemblies, assemblies and installations and these units are then combined to make major groups. These major groups are in turn assembled to make the complete airplane. The order in which a complete airplane may be disassembled into these groups, assemblies, subassemblies, and detail parts is known as "assembly breakdown order."

1-11. AIRPLANE GROUP BREAKDOWN

The groups of the airplane are arranged in Section II in the following order:

Outer Wing Group
Inner Wing Group
Removable Nose Group
Forward Fuselage Group
Center Fuselage Group
Aft Fuselage Group
Armament Group
Alighting Gear Group
Power Plant Group

As shown in the Table of Contents, each of these main groups of the airplane is further divided into the various installations and assemblies which comprise the group. The parts information for each main group and/or its installations and assemblies is presented in the form of a list of parts or "breakdown" and an accompanying illustration indexed to this breakdown. The first such breakdown in any main group usually serves as an index for the other breakdowns in the group. Each breakdown is arranged with the complete installation or assembly at the head of the list, and with the remaining parts which comprise the breakdown following in disassembly order wherever possible.

1-12. BREAKDOWN FORM. The breakdown or parts list for each component, installation, or assembly is arranged in columnar form to give the following information:

FIGURE AND INDEX NUMBER
PART NUMBER
DESCRIPTION
UNITS PER ASSEMBLY
USABLE ON CODE

1-13. FIGURE AND INDEX NUMBER COLUMN. This column is the first column on the left and contains the figure number of the illustration on which the location and appearance of the parts indexed may be determined. Each index number shown in this column identifies a part shown on the illustration. Index numbers are assigned to all spares and other normally replaceable items. Assemblies considered to be non-repairable at line maintenance level and which would have to be ordered from a higher repair level are also indexed. Installations and non-procurable assemblies for which a separate breakdown has been provided are indexed for cross-reference purposes only.

1-14. PART NUMBER COLUMN.

1-15. PART NUMBER. This column contains the number assigned to each part as explained in paragraph 1-5.

1-16. SPECIAL CONDITIONS. When a part must be used in matched pairs, is affected by an Aircraft Service Change, is interchangeable only under certain conditions, or is affected by some other condition relating to usability, a symbol will be placed after the part number. This symbol relates to a footnote at the bottom of the page which describes the special condition.

1-17. QUICK-ENGINE-CHANGE ASSEMBLY. Part numbers followed by the symbol "Q" in the power plant breakdown of Section II indicate the components comprising the Quick-Engine-Change Assembly. For Navy procurement purposes, the Quick-Engine-Change Assembly less the engine, and engine accessories is equivalent to the Quick-Engine-Change Kit.

1-18. PARTS DESCRIPTION COLUMN.

1-19. GENERAL. The Parts Description Column gives the complete name of the part, shows by an indent system of numbered columns the assembly relationship of each part with respect to other parts in the breakdown and gives pertinent information with respect to superseding parts, altered parts, publications giving additional information on vendor items, manufacturers' code symbols, etc.

1-20. NOMENCLATURE. The nomenclature given for each part agrees with the title of the Contractor's draw-

ing which represents the part except when the part is used in more than one system or component. When such is the case, the nomenclature has been changed to best relate the part to its actual use.

1-21. INDENT OF NOMENCLATURE. Numbered columns at the left side of the Parts Description Column are provided to show, by indent of the part name, how the various parts build up into subassemblies, assemblies, etc., to make the complete assembly or installation listed in the first column at the head of the breakdown. Since all detail parts, subassemblies, and etc., are not stocked as spares, it may be necessary to replace such a part by replacing its next higher assembly. When such is the case, the next higher assembly of a known part may be determined by noting the first item appearing one column to the left and above the known part. In the same manner, when an assembly is not stocked and must be made up from its component parts, these parts will be found one column to the right and directly below the known assembly. Remember, that any assembly whether it be large or small, or whether it be made up of many or few component parts will always have these component parts listed below and one column to the right. Also remember that any parts or assemblies appearing in the same indent must be used together to make up the next higher assembly appearing above and one column to the left and can never be used as components of each other. The only exception to this breakdown order will be found in the case of attaching parts, which are listed immediately following and in the same column as the part which they attach. They are easily identified by the caption "Attaching Parts". When it is desired to determine the next higher assembly for any item appearing in column one of the breakdown, refer to the figure given in parentheses after the item nomenclature. Reference figure numbers following assemblies or subassemblies in the breakdown indicate that it has been impracticable to illustrate the complete subassembly on the illustration for the breakdown, and that a separate illustration and parts listing has been provided by the reference figure.

1-22. SPECIAL DESCRIPTIVE INFORMATION. Following the nomenclature of each part in the Parts Description Column, additional information which is applicable is given for superseding parts, altered parts, alternate parts, applicable government publications, and manufacturers' code symbols as follows:

a. SUPERSEDING PARTS

Notes containing information concerning future procurement of superseding parts, and complete interchangeability of superseded and superseding parts are included in the description column immediately following the nomenclature of the part. The note for a superseded part that is limited in use and is to be replaced by a superseding parts reads "for future procurement use xx-xxxxx". The note for the superseding part for this item will read "use for future procurement to replace xx-xxxxx". The code given in the "usable on" column will be limited for the superseded item and the code shown for the superseding item will show the total usability of both parts. If the parts are completely interchangeable, the note for the superseded part reads "alternate for xx-xxxxx", and for the superseding part the note reads "use for future procurement to replace xx-xxxxx". The usable on code will be the same for both items.

b. ALTERED PARTS

When a part assigned a Contractors' part number has been made by altering a vendor part or standard part, a note giving the design manufacturers' name and part number or the standard part number will follow the name of the part.

c. ALTERNATE VENDOR PARTS

Alternate standard and vendor parts are described when two or more of such parts may be used for the particular purpose and location noted.

d. REFERENCE PUBLICATIONS

When existing government publications, as listed in the Navy Publications Index, apply to a part, the publication number will be given following the part nomenclature.

e. MANUFACTURERS' CODE SYMBOLS

Nomenclature of all vendor parts will be followed by the design manufacturer's code symbol in parentheses. The complete list of manufacturers' code symbols is given in Paragraph 1-52.

1-23. UNITS PER ASSEMBLY COLUMN. This column lists the quantity of units required per next assembly. The letters AR indicate the quantity to be "As Required."

1-24. "USABLE ON" CODE COLUMN. This column indicates by code all aircraft, as covered by this publication, on which a part is usable. See page 7 of this introduction for the Master "Usable On" Code for the BuAer serial numbers assigned to the aircraft covered by this publication.

Note

Absence of coding indicates that the part is usable in relation to a particular assembly or installation on all aircraft covered by this publication.

For other usability of a part in different locations, see the cross reference in the Numerical Index. See next higher assembly for usability of simple hardware. When interchangeable assemblies have components that are not interchangeable, the usability of these components depends on the assembly found in the aircraft. Therefore, the usability of these components is indicated by showing the next assembly part number on which they are usable in this column.

1-25. BREAKDOWN ILLUSTRATIONS. An illustration of each assembly, subassembly and installation, exploded or cut away as necessary to show detailed parts, is provided for the parts listed in the Group Assembly Parts List. Where redesigned assemblies differ sufficiently to require a new view, this view is illustrated with a dashed (---) relation line to the original configuration. Where necessary a small airplane sketch appears on the illustration on which the item illustrated is located with a solid black area. The gray area indicates the main airplane group of which the illustrated item forms a part. Except where directional arrows are used the parts illustrated face in the same direction as the small airplane sketch or general view.

1-26. SPECIAL EQUIPMENT GROUP

1-27. DESCRIPTION. This portion of Section II is divided into various kits of Special Equipment which are not portions of the basic airplane but which may be installed to permit the airplane to accomplish special missions. Items of equipment necessary for inflight refueling, shock strut extension, special armament configurations, etc., are covered in this portion of Section II.

1-28. BREAKDOWN FORM. The breakdown form for the kits is the same as that provided for the various groups of the airplane with a parts list and indexed illustration being provided for each kit or item of special equipment. The first illustration and parts list in Special Equipment Group serves as an index to the various kits and items of special equipment provided.

1-29. SYSTEM INDEX ILLUSTRATIONS

1-30. PURPOSE. Since, as was previously explained, the airplane is broken down into major components and groups from the standpoint of assembly or disassembly, reference to any individual group breakdown will not show a complete operating or functional system. For this reason, system index illustrations are provided at the end of Section II to show the location and arrangement of each complete operating system in the airplane.

1-31. USAGE. Each system index drawing shows by index number the major units, piping, linkages, mechanisms, cables, wiring, etc., which make up the system. The index numbers are referenced to the figures in Section II which will give the complete detailed breakdown of the particular item. Thus, when a part may be known by name or general location in the airplane, reference to the system index drawing will, although it may not show the exact details of the desired part, give reference to the figure or figures which do give the detailed information for the desired part and its closely related components.

1-32. SECTION III - NUMERAL INDEX

1-33. ARRANGEMENT

Section III is divided into three numerical parts lists or indexes as follows:

a. Numerical list of special tool and equipment.
b. Numerical index of Contractor's parts.
c. Numerical index of standard and vendors' parts.

1-34. NUMERICAL LIST OF SPECIAL TOOLS AND EQUIPMENT

This list gives those special tools and ground handling equipment which have been designed by the Contractor for use on F3H series aircraft. Such information as stock number, part number, description, source code, "usable on code", and microfilm index number is given, as applicable for each tool or item of ground handling equipment.

1-35. NUMERICAL INDEX OF CONTRACTORS PARTS

This index arranged in numerical order, provides, for each Contractor's part, such information as stock number, part number, source code, figure and index number, quantity per aircraft, and microfilm index number as applicable.

1-36. PART NUMBER COLUMN. This column contains all Contractor's parts used on, and all production drawing numbers applicable to the aircraft covered by this publication.

Note

The addition of the Aviation Supply Office prefix to a Contractor's part number forms the stock number and indicates that the part has been procured as a spare. For example: R82MDA-XX-XXXXX-X

1-37. SOURCE CODE COLUMN.

1-38. GENERAL. The source codes in this column are assigned by joint action of the Aviation Supply Office and Bureau of Aeronautics Representative in accordance with BuAer Instruction NAVAER 00.22 dated 18 March 1953. New parts listed without source code will be coded on revision. The meaning of each source code is explained in the following paragraphs.

1-39. CODE "P" - PARTS UNDER INVENTORY STOCK CONTROL.

a. Code "P" is applied to parts on which usage is anticipated or known. Code "P" parts may be requisitioned and installed by any maintenance level unless followed by the letter "D" (Depot or O&R) which restricts requisition and replacement to Overhaul & Repair Department or Depot level only. Restricted service manufacture is considered practicable but only after an attempt has been made to procure from supply sources.

b. Code "P1" is applied to parts which are very difficult, impractical, or uneconomical to

manufacture. Code "P1" parts may be requisitioned and installed by any maintenance level, unless followed by the letter "D" (Depot or O&R) which restricts requisition and replacement to Overhaul & Repair Department or Depot level only.

1-40. CODE "M" - MANUFACTURE, PARTS NOT PROCURED.

a. Code "M" is applied to parts which are within the capabilities of any activity to manufacture. Procurement is not justified in view of no anticipated or relatively low usage, or storage and installation factor of these parts. Needs are to be met by local manufacture as required.

b. Code "M1" is applied to parts which can be manufactured only by utilizing the capabilities of the Overhaul & Repair Department or Depot. Procurement is not justified in view of no anticipated or relatively low usage and installation factors. The needs of all activities are to be met through local manufacture or requisitioned from the nearest designated overhaul activity.

1-41. CODE "A" - ASSEMBLE, ASSEMBLY NOT PROCURED.

a. Code "A" is applied to assemblies made up of two or more parts, at least one of which is purchased and carries an individual part number and description and which may be assembled by any maintenance level.

b. Code "A1" is applied to assemblies made up of two or more parts, at least one of which is purchased and carries an individual part number and description and which may be assembled only by activities having Overhaul and Repair Department or Depot Facilities.

1-42. CODE "X" - PARTS CONSIDERED IMPRACTICABLE FOR MANUFACTURE OR PROCUREMENT.

a. Code "X" is applied to main structural members or similar parts which, if required, would suggest extensive aircraft repair. The need of a part, or parts, coded "X" (wing spars, center section structure) should normally result in a recommendation to retire the aircraft from service.

b. Code "X1" is applied to parts for which procurement of the next larger assembly source coded "P1" is justified; e.g., an integral detail part, such as welded segments inseparable from its assembly, a part machined in a matched set, or a part of an assembly which, if required, would suggest extensive reconditioning of each assembly.

c. Code "X2" is applied to parts which are not procured for stock but may be acquired for use through salvage. Activities requiring such parts shall attempt to obtain from salvage; if not obtainable from salvage, such parts shall be requisitioned through normal supply channels with supporting justification. Repeated requests shall justify a change in code to "P1".

1-43. CODE "*" - PARTS NOT PROCURED, MANUFACTURED OR STOCKED.

a. Code "*" is applied to installation drawings, diagrams, instruction sheets, field service drawing numbers, obsolete parts which cannot be procured or manufactured.

1-44. FIGURE AND INDEX NUMBER COLUMN. This column gives the figure and index number of the illustration on which the part listed may be found. For parts which have not been assigned index numbers, only the figure number appears in this column.

1-45. QUANTITY PER AIRCRAFT COLUMN. This column gives the total quantity of each part per aircraft.

1-46. NUMERICAL INDEX OF STANDARD AND VENDOR PARTS

This index, arranged in numerical order, provides such information as part number, stock number, figure and index number, and quantity per aircraft for each standard or vendor part.

1-47. PART NUMBER COLUMN. This column lists all standard and vendor parts used on the aircraft covered by the manual. The use of letters and numbers together required a special numerical arrangement for uniformity of listing and to find part numbers quickly. Part number arrangement begins at the extreme left position and continues, one position at a time, until all parts are arranged. The order of precedence for the extreme left (first) position is as follows:

Letters A through Z
Numerals 0 through 9

The order of precedence for the second and succeeding positions is as follows:

Space (blank column)
Dash (-)
Letters A through Z, then
Numerals 0 through 9

Note

Alphabetic (letter) o's are listed as numerical zeros.

1-48. STOCK NUMBER COLUMN. This column contains the equivalent number for the standard and vendor parts as stocked by the Aviation Supply Office.

1-49. FIGURE AND INDEX NUMBER COLUMN. This column gives the figure and index number of the illustration or illustrations on which the part listed may be found. However, for Government and Contractor's standard parts, only the figure and index number of the first illustration on which the part appears is listed.

1-50. QUANTITY PER AIRCRAFT COLUMN. This column gives the total quantity of each part per aircraft.

HOW TO USE THE PARTS CATALOG

IF YOU *Don't* KNOW THE PART NUMBER . . .

Do This

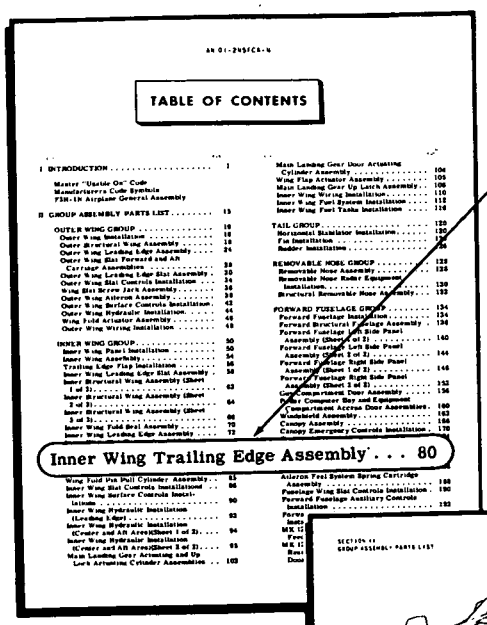

1. Determine in which of the major groups; Wing Tail, Fuselage etc., the part is located. Then turn to the table of Contents. Under each of the major group headings will be found a list of all illustrations comprising that group. From this list select the illustration most likely to contain the desired part; or Consult one of the Complete System Installation Drawings which appear as the last pages of Section II. These illustrations show complete functional systems (Fuel, Hydraulic, Electrical, etc.), and serve as a visual index to the equipment throughout the catalog.

2. Refer to the page number indicated and find desired part on illustration.

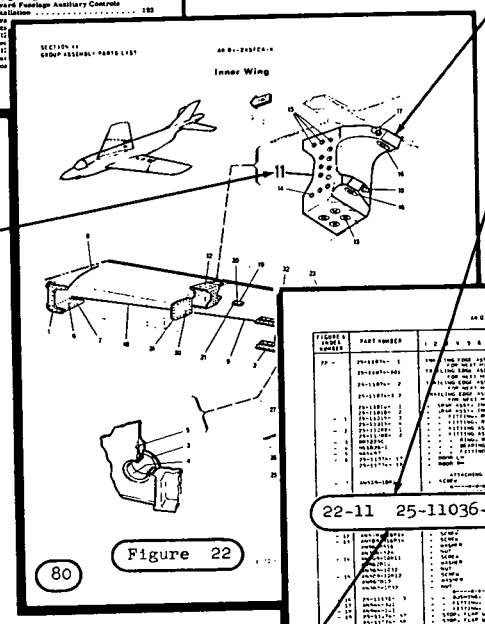

3. Note the Figure Number of the illustration and the Index Number of the part. Refer to the corresponding Figure-Index Number on the Assembly List page for Part Number, Nomenclature, etc.

3. If illustration of part is desired - refer to same Figure and Index Number on accompanying illustration.

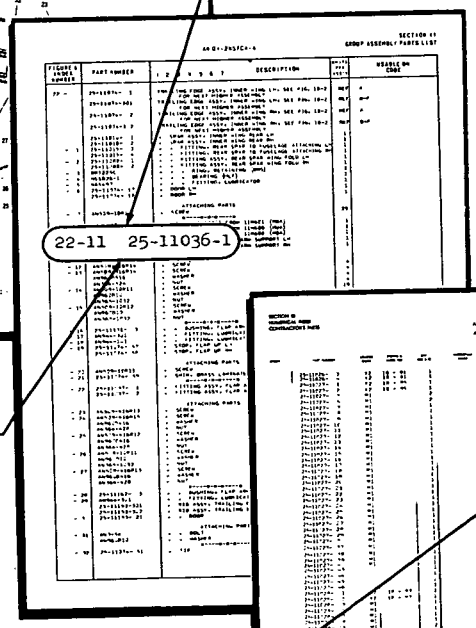

2. Turn to Figure and Index Number indicated to obtain desired information.

IF YOU *Do* KNOW THE PART NUMBER . . .

Do This

1. Find the Part Number in the Numerical Parts List. Note the Figure and Index Number where the part is called out in Group Assembly Parts List.

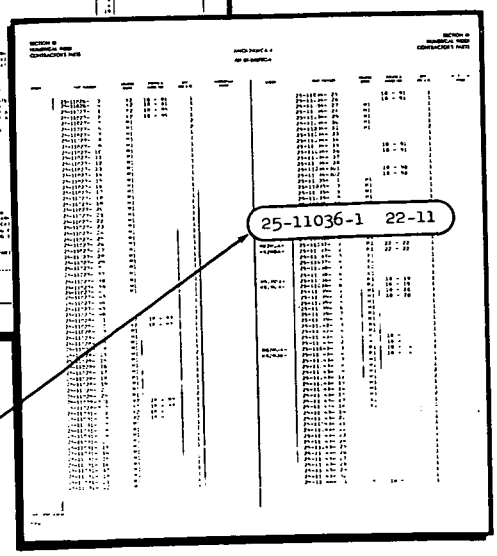

MASTER "USABLE ON" CODE

(See Paragraph 1-24)

1-51. The serial number codes assigned to the F3H-1N and F3H-2N airplanes have been separated below into the Contractor's production blocks. Each block is represented by a letter code to include all serial numbers of that production block. Each block further breaks down into individual unit codes for coding changes within a block. The Contractor's production sequence number (MAC No.) is included as added information.

The following are examples of code usage:
a-b indicates part to be usable on F3H-1N Serial Numbers 133489 thru 133518
a-c20 indicates part to be usable on F3H-1N Serial Numbers 133489 thru 133538

NOTE:
Absence of code indicates part to be usable on all Serial Numbers covered by this publication.

F3H-1N

BLOCK CODE	UNIT CODE	SERIAL NUMBER	MAC NO.
A Block 1	1	133489	1
	2	133490	2
	3	133491	3
	4	133492	4
	5	133493	5
	6	133494	6
	7	133495	7
	8	133496	8
	9	133497	9
	10	133498	10
B Block 2	1	133499	11
	2	133500	12
	3	133501	13
	4	133502	14
	5	133503	15
	6	133504	16
	7	133505	17
	8	133506	18
	9	133507	19
	10	133508	20
	11	133509	21
	12	133510	22
	13	133511	23
	14	133512	24
	15	133513	25
	16	133514	26
	17	133515	27
	18	133516	28
	19	133517	29
	20	133518	30

F3H-1N

BLOCK CODE	UNIT CODE	SERIAL NUMBER	MAC NO.
C Block 3	1	133523	35
	2	133524	36
	3	133525	37
	4	133526	38
	5	133527	39
	6	133528	40
	7	133529	41
	8	133530	42
	9	133531	43
	10	133532	44
	11	133533	45
	12	133534	46
	13	133535	47
	14	133536	48
	15	133537	49
	16	133538	50
	17	133539	51
	18	133540	52
	19	133541	53
	20	133542	54
	21	133543	55
	22	133544	56
	23	133545	57
	24	133546	58
	25	133547	59
	26	133548	60

F3H-2N

BLOCK CODE	UNIT CODE	SERIAL NUMBER	MAC NO.
D Block 4	1	133549	61
	2	133550	62
	3	133551	63
	4	133552	64
	5	133553	65
	6	133554	66
	7	133555	67
	8	133556	68
	9	133557	69
	10	133559	71
	11	133560	72
	12	133561	73
	13	133562	74
	14	133563	75
	15	133564	76
	16	133565	77
	17	133566	78
	18	133567	79
	19	133568	80
	20	133569	81
	21	133570	82
	22	133571	83
	23	133572	84
	24	133573	85
	25	133574	86
	26	133575	87
	27	133576	88
	28	133577	89
	29	133578	90

F3H-2N

BLOCK CODE	UNIT CODE	SERIAL NUMBER	MAC NO.
E Block 5	1	133579	91
	2	133580	92
	3	133581	93
	4	133582	94
	5	133583	95
	6	133584	96
	7	133585	97
	8	133586	98
	9	133587	99
	10	133588	100
	11	133589	101
	12	133590	102
	13	133591	103
	14	133592	104
	15	133593	105
	16	133594	106
	17	133595	107
	18	133596	108
	19	133597	109
	20	133598	110
	21	133599	111
	22	133600	112
	23	133601	113
	24	133602	114
	25	133603	115
	26	133604	116
	27	133605	117
	28	133606	118
	29	133607	119
	30	133608	120

F3H-2N

BLOCK CODE	UNIT CODE	SERIAL NUMBER	MAC NO.
F Block 6	1	133609	121
	2	133610	122
	3	133611	123
	4	133612	124
	5	133613	125
	6	133614	126
	7	133615	127
	8	133616	128
	9	133617	129
	10	133618	130
	11	133619	131
	12	133620	132
	13	133621	133
	14	133622	134
	15	133623	135
	16	133624	136
	17	133625	137
	18	133626	138
	19	133627	139
	20	133628	140
	21	133629	141
	22	133630	142
	23	133631	143
	24	133632	144
	25	133633	145
	26	133634	146
	27	133635	147
	28	133636	148
	29	133637	149
	30	133638	150

1-52 The following Manufacturer's Code Symbols are used throughout this Illustrated Parts Breakdown. The code symbols used are as shown in the Navy Code of Manufactured Names, Section 0003, of the Aviation Supply Office Catalog of Navy Material.

AAAD - Aetna Steel Products Corp., Bridgeport, Connecticut

AADC - Auto Valve Inc., Dayton, Ohio

ACA - American Chain & Cable Co., Detroit, Mich., Bridgeport, Conn., or Monessen, Pa.

AEDS - Accessory Products Co., Whittier, California

AF - Heli-Coil Corp., Danbury, Conn.

AIR - Airesearch Mfg. Co., Los Angeles, Calif.

AITR - Airtron Inc., Linden, N. J.

AL - Alemite Div., Stewart Warner Corp., Chicago, Illinois

AMP - American Phenolic Corp., Chicago, Illinois

AMRO - Aero-Marine Products Co., West Los Angeles, Calif.

AP - Adel Division, General Metals Corporation, Burbank, California

APD - Aeroproducts Division, General Motors Corporation, Dayton, Ohio

APX - Apex Machine & Tool Co., The Dayton, Ohio

AQ - Aeroquip Corporation, Jackson, Michigan

ARBN - Airborne Accessories Corp., Hillside, New Jersey

ARN - Arens Controls Inc., Evanston, Illinois

ARP - Aircraft-Marine Products Inc., Harrisburg, Pennsylvania

AS - Aero Supply Mfg. Co., Inc., Corry, Pennsylvania

ASE - American Seating Company, Grand Rapids, Michigan

ATI - Atlantic India Rubber Works Inc., Chicago, Illinois

AVDE - Aviation Development Inc., Burbank, California

AVEN - Aviation Engineering Corp., Ozone Park, New York

AVIC - Avico Inc., Portsmouth, R. I.

AXD - Amplex Mfg., The Sub Chrysler Corp., Detroit, Mich.

BB - Bound Brook Oil-Less Bearing Co., Bound Brook, New Jersey

BC - Breeze Corporations Inc., Newark, New Jersey

BE - Burndy Engineering Co., Inc., New York, New York

BHE - Birtcher Corporation, North Los Angeles, California

BLC - Barry Corp., The Watertown, Mass.

BPD - Bendix Products Division, Bendix Aviation Corporation, South Bend, Indiana

BUR - Burklyn Co., Los Angeles, Calif.

BUS - Bussmann Mfg. Co., St. Louis, Mo.

CDE - Consolidated Diesel Electric Corp., Stamford, Connecticut

CDM - Canfield Mfg. Co., Grand Haven, Mich.

CED - Cannon Electric Co., Los Angeles, Calif. & East Haven, Conn.

CFM - Camfield Mfg. Co., Grand Haven, Mich.

CH - Chandler-Evans Div., Niles-Bement-Pond Co., West Hartford, Conn.

CNL - Cornelius Co., The Minneapolis, Minn.

COID - Co-operative Industries Inc., Chester, New Jersey

CPPI - Canton Plastic Products Inc., Canton, Ohio

CRPI - California Rubber Products Inc., Hawthorne, California

CTAD - Curtis Automotive Devices Inc., Dayton, Ohio

CUT - Cutler-Hammer Inc., Milwaukee, Wisconsin

DAGE - Dage Electric Co., Beach Grove, Ind.

DARL - Darling, R. E.
Bethesda, Md.

DC - Davison Chemical Corp., The
Baltimore, Maryland

DL - Dill Mfg. Co., The
Cleveland, Ohio

DLC - Dialight Corp.,
Brooklyn, N. Y.

DNKA - Dunbar-Kapple Inc.,
Geneva, Illinois

DZ - Dzus Fastener Co., Inc.,
Babylon, New York

EABN - Electro-Snap Switch & Mfg. Co.,
Camden, New Jersey

EC - Eclipse Aviation Div.,
Bendix Aviation Corp.,
Teterboro, N. J.

ECD - Elco Company
Succ by Electric Boat Co.,
General Dynamics Corp.,
Groton, Conn.

ECP - Eclipse-Pioneer Division,
Bendix Aviation Corp.,
Teterboro, New Jersey

ELE - Electrol Inc.,
Kingston, N. Y.

EN - Elastic Stop Nut Corp. of
America,
Union, New Jersey

ESSX - Essex Mfg. Co.,
St. Louis, Mo.

EXS - Exhibit Supply Co.,
Chicago, Illinois

FAF - Fafnir Bearing Co.,
New Britain, Conn.

FAKB - Flexonics Corp.,
Maywood, Ill.

FBG - Foote Bros. Gear & Mach. Corp.,
Chicago, Illinois

FLRE - Flight Refueling Co., Inc.,
Danbury, Conn.

FN - Firestone Tire & Rubber Co.,
Akron, Ohio

GCO - General Controls Co.,
Glendale, California

GE - General Electric Co.,
Schenectady, New York

GEMI - General Electric Co.,
Meter & Instrument Div.,
West Lynn, Mass.

GMC - Grimes Mfg. Co.,
Urbana, Ohio

GN - Guardian Electric Mfg. Co.,
Chicago, Ill.

GOS - Goshen Rubber Co., Inc.,
Goshen, Indiana

GPC - Gladden Products,
Glendale, California

GPPI - Gar Precision Parts Inc.,
Stamford, Connecticut

GVP - Groov-Pin Corp.,
Ridgefield, N. J.

GY - Goodyear Tire & Rubber Co., Inc.,
Goodyear Aircraft Corp.,
Akron, Ohio

HBDI - Harley Buckle Div.,
Sembodja Corp.,
New York, N. Y.

HEC - Heim Co., The
Fairfield, Conn.

HIS - Hi-Shear Rivet Tool Co., The
Hermosa Beach, Calif.

HKM - Huck Mfg. Co.,
Detroit, Mich.

HLF - Halfco Products Co.,
Los Angeles, Calif.

HRML - Huntington Rubber Mills,
Portland, Oregon

HS - Hamilton Standard Propeller Div.,
United Aircraft Corp.,
East Hartford, Conn.

HST - Hartford Steel Ball Co.,
Hartford, Conn.

HUG - Hughes Aircraft Co.,
Culver City, Calif.

HWL - Hartwell Aviation Supply Co.,
Los Angeles, California

HYRM - Hydraulic Research & Mfg. Co.,
Burbank, California

JAPC - James-Pond-Clark
Pasadena, California

JH - Jack & Heintz Precision
Industries Inc.,
Cleveland, Ohio

JM - Johns-Manville Corp.,
New York, N. Y.

JOMI - Joy Mfg. Co.,
Electrical Connector Div.,
St. Louis, Missouri

KPRD - Koppers Co., Inc.,
Metal Products Div.,
Piston Ring Dept.,
Baltimore, Md.

KY - Kenyon Instrument Co., Inc., Huntington Station, N. Y.

LA - Lear Inc., Grand Rapids, Mich.

LMW - Liberty Mirror Div., Libbey-Owens-Ford Glass Co., Brackenridge, Pa.

LO - Lord Mfg. Co., Erie, Pennsylvania

LR - Leach Relay Co., Los Angeles, Calif.

LTF - Littelfuse Inc., Des Plaines, Ill.

MAGH - Marotta Engineering Co., Boonton, New Jersey

MAL - Mallory, P. R. & Co., Inc., Indianapolis, Indiana

MAR - Marman Products Co., Inglewood, Calif.

MCS - Micro Switch Div., Minneapolis Honeywell Regulator Co., Freeport, Illinois

MCV - M C Mfg. Co., Lake Orion, Mich.

MDA - McDonnell Aircraft Corp., St. Louis, Missouri

MIM - Minnesota Mining & Mfg. Co., St. Paul, Minn.

MKL - Monadnock Mills San Leandro, Calif.

MVEM - Mar Vista Engineering Co., Los Angeles, Calif.

NEUS - Neuschotz Engineering Co., Los Angeles, Calif.

NGE - Nigg Engineering Co., Covina, California

NUCA - National Utilities Corp., Pasadena, California

NYB - New York Air Brake Co., New York, N. Y.

OM - Ohmite Mfg. Co., Chicago, Illinois

PA - Parker Appliance Co., The Cleveland, Ohio

PC - Pacific Airmotive Corp., Burbank, Calif.

PCO - Pacific Coast Engineering Co., Alameda, California

PO - Pollak Mfg. Co., Arlington, N. J.

PUP - Purolator Products Inc., Rahway, New Jersey

RAY - Raytheon Mfg. Co., Waltham, Mass.

RBC - Roller Bearing Co. of America Trenton, New Jersey

RF - Resistoflex Corp., Belleville, New Jersey

RHS - Hetherington Inc. Sharon Hill, Pa.

RMS - Ramsey Corp., St. Louis, Mo.

RO - Lear-Romec Div., Lear Inc., Elyria, Ohio

ROSN - Rosan Inc., South Gate, Calif.

RYY - Roylin Inc., Glendale, Calif.

SA - Simmonds Aerocessories Inc., New York, New York

SAIE - Standard Armament Inc., Los Angeles, Calif.

SBCI - Smith Bearing Co., Inc., The Orange, New Jersey

SEAE - Seaboard Electric Co., New York, N. Y.

SELB - Selb Mfg. Co., Maplewood, Mo.

SEPD - Seaman Products Div., of Seaman Paper Co. Inc., Chicago, Illinois

SFW - Stewart, F. W. Mfg. Co., Chicago, Ill.

SH - Shakeproof Inc., Div. Illinois Tool Works Chicago, Ill.

SHA - Shafer Bearing Co., Chicago, Illinois

SHWS - Shamban W. S. & Co., Culver City, Calif.

SLP - Steel Products Engineering Co., Springfield, Ohio

SLZ - Specialties Inc., Syosset, N. Y.

SPS - Standard Pressed Steel Co., Jenkintown, Pa.

SPTD - Spencer Thermostat Div., Metals & Controls Corp., Attleboro, Mass.

SQ - Square D Co., Detroit, Mich. & New York, N. Y.

STM - Stimpson, Edwin B. Co., Brooklyn, New York

SWIN - Switchcraft Inc., Chicago, Ill.

SWPC - South West Products Co., Pasadena, Calif.

TIN - Tinnerman Products Inc., Cleveland, Ohio

TOM - Thomas & Betts Co., Elizabeth, N. J.

TOR - Torrington Co., The Torrington, Conn.

TP - Thompson Products Inc., Bell Calif., & Cleveland, Ohio

TRA - Trane Co., The La Crosse, Wis.

TRPR - Transco Products Los Angeles, Calif.

TTM - Torrington Mfg. Co., Torrington, Conn.

USR - U. S. Rubber Co., New York, N. Y.

VCH - Vapor Heating Corp., Chicago, Illinois

VI - Vickers Inc., Detroit, Mich., & St. Louis, Mo.

WAEC - Waterman Engineering Co., Evanston, Illinois

WAH - Weston Hydraulics Ltd., Los Angeles, Calif.

WD - White, S. S. Dental Mfg. Co., The Philadelphia, Pennsylvania

WFC - Waugh Equipment Co., New York, N. Y.

WFRC - Wolfe Franklin C. Co., The Beverly Hills, Calif.

WH - Weatherhead Co., The Cleveland, Ohio

WIG - Wiggins, E. B. Oil Tool Co., Los Angeles, Calif.

WK - Walter Kidde & Co., Inc., Belleville, N. J.

WMAC - Wemac Co., Inglewood, Calif.

WTR - Whittaker William R. Co., Ltd., Los Angeles, California

WX - Westinghouse Elec. Corp., Cleveland, Ohio, Buffalo, N. Y., Pittsburgh, Pa. & Washington, D. C.

YARD - Yardney Laboratories Inc., New York, N. Y.

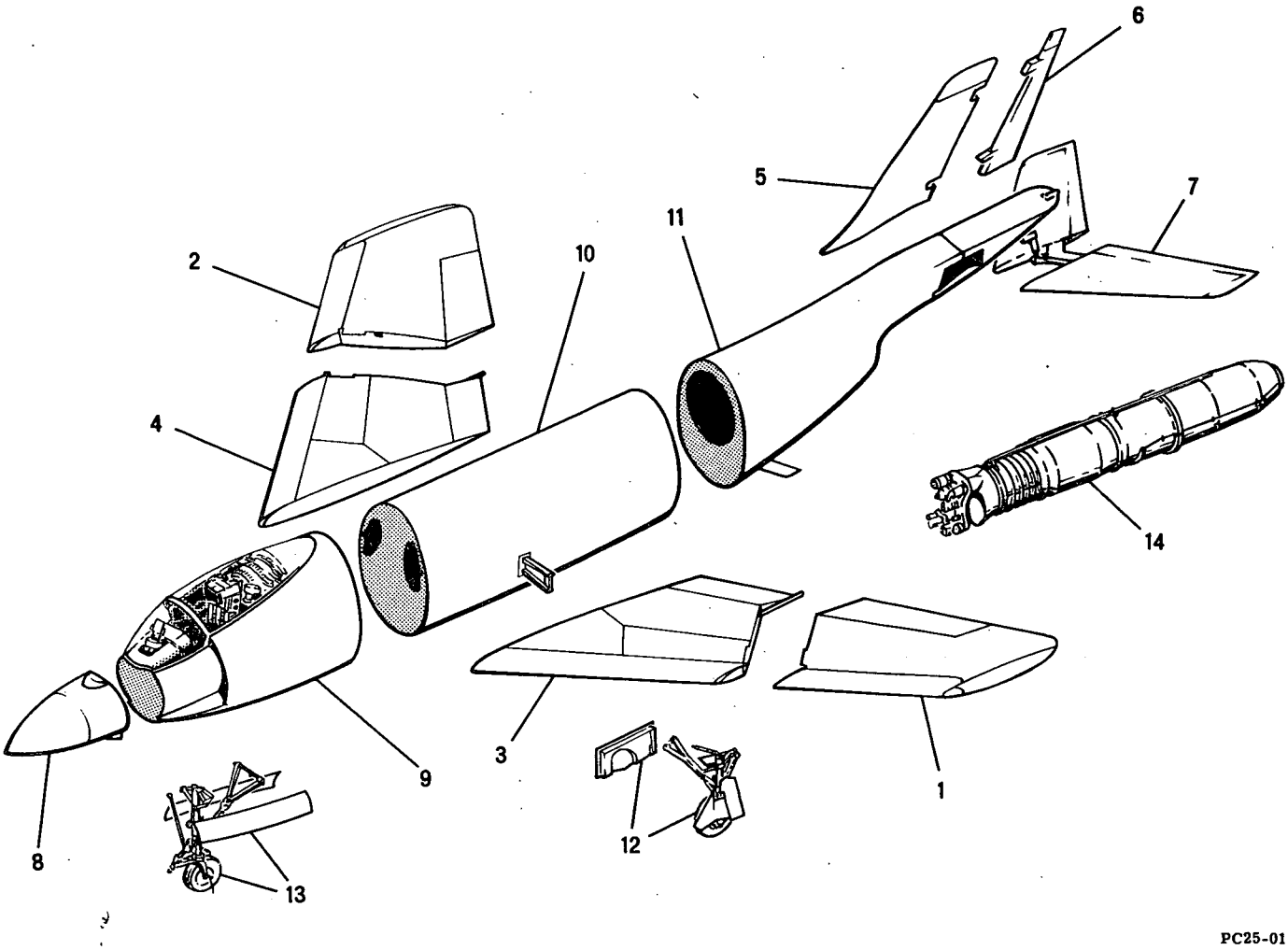

Figure 1 - F3H-1 Airplane General Assembly

FIGURE & INDEX NO.	PART NUMBER	NOMENCLATURE	FIGURE NUMBER
1-	25-00001	General Assembly, F3H-1 Airplane	
-1	25-15000-1	Wing Installation, Outer LH	2
-2	25-15000-2	Wing Installation, Outer RH	2
-3	25-11000-1	Panel Installation, Inner Wing, LH	14
-4	25-11000-2	Panel Installation, Inner Wing, RH	14
-5	25-23000-303	Fin Installation	39
-6	25-24000-1	Rudder Installation	40
-7	25-21000-301	Stabilator Installation, Horizontal	37
	25-21000-303	Stabilator Installation, Horizontal	38
-8	25-30010-1	Nose Assembly, Removable	41
	25-30010-301	Nose Assembly, Removable	41
	25-30010-305	Nose Assembly, Removable	41
-9	25-31000-1	Fuselage Installation, Forward	44
	25-31000-301	Fuselage Installation, Forward	44
	25-31000-303	Fuselage Installation, Forward	44
-10	25-32001-1	Fuselage Assembly, Center Section	106
	25-32001-301	Fuselage Assembly, Center Section	106
	25-32001-307	Fuselage Assembly, Center Section	106
	25-50001-3	Mount Installation, Engine Forward	124
	25-50001-303	Mount Installation, Engine Forward	124
	25-59000-301	Duct Assembly, Engine Air Inlet LH	127
	25-59000-302	Duct Assembly, Engine Air Inlet RH	127
-11	25-33000-1	Fuselage Installation, Aft	138
	25-33000-303	Fuselage Installation, Aft	138
	25-61236-1	System Installation, Rudder Feel	154
	25-71000-1	Armament Installation	165
-12	25-41000-1	Gear Installation, Main Landing LH	178
	25-41000-301	Gear Installation, Main Landing LH	178
	25-41000-2	Gear Installation, Main Landing RH	178
	25-41000-302	Gear Installation, Main Landing RH	178
-13	25-45000-1	Gear Installation, Nose Landing	184
	25-45000-301	Gear Installation, Nose Landing	184
-14	25-50006-1	Power Plant Installation & Quick Engine Change Assy.	190
	25-90005	Special Equipment Index	

SECTION II

GROUP ASSEMBLY PARTS LIST

Outer Wing

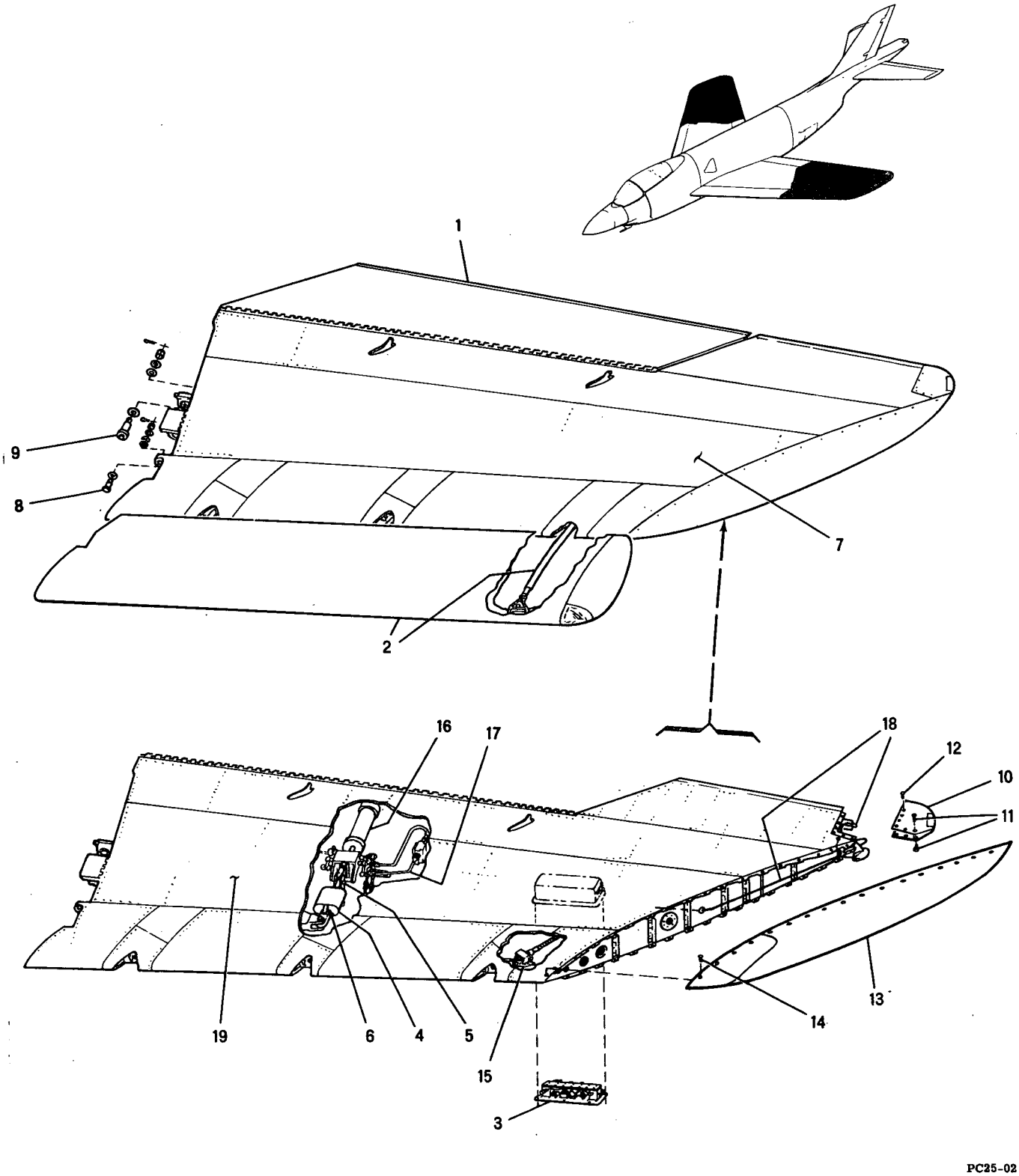

Figure 2 -- Outer Wing Installation

FIGURE & INDEX NUMBER	PART NUMBER	1 2 3 4 5 6 7 DESCRIPTION	UNITS PER ASS'Y	USABLE ON CODE
2 -	25-15000- 1	WING INSTALLATION, OUTER LH, SEE FIG. 1-1 FOR NEXT HIGHER ASSY	1	
	25-15000- 2	WING INSTALLATION, OUTER RH, SEE FIG. 1-2 FOR NEXT HIGHER ASSY	1	
- 1	25-17000- 1	. AILERON INSTALLATION, OUTER WING LH, SEE FIG. 3	1	
	25-17000- 2	. AILERON INSTALLATION, OUTER WING RH, SEE FIG. 3	1	
- 2	25-19500-301	. SLAT ASSEMBLY, OUTER WING LEADING EDGE LH, SEE FIG. 7	1	
	25-19500-302	. SLAT ASSEMBLY, OUTER WING LEADING EDGE RH, SEE FIG. 7	1	
- 3	RT160/APN22	. TRANSMITTER/RECEIVER, GFP, LEFT SIDE ONLY	1	
	25-61400- 3	. SERVO INSTL, OUTER WING SURFACE CONTROLS LH	1	
	25-61400- 4	. SERVO INSTL, OUTER WING SURFACE CONTROLS RH	1	
- 4	R88S0210-015	. . UNIT, SERVO, GFP	1	
		ATTACHING PARTS		
- 5	NAS464-4A16	. . BOLT	1	
	AN960D416L	. . WASHER	1	
	AN960D416	. . WASHER	1	
	AN364-428	. . NUT	1	
- 6	NAS464-4A19	. . BOLT	1	
	AN960D416	. . WASHER	2	
	AN364-428	. . NUT	1	
		¤----¤-¤-¤----¤		
- 7	25-15001- 1	. WING ASSY, OUTER LH	1	
	25-15001- 2	. WING ASSY, OUTER RH	1	
		ATTACHING PARTS		
- 8	25-11098- 3	. BOLT, FRONT SPAR UPPER HINGE	1	
	NAS143-16C	. WASHER	1	
	4M36-04015	. WASHER (MDA)	3	
	AN320-8	. NUT	1	
	AN380-3-5	. PIN, COTTER	1	
- 9	25-11123- 5	. BOLT, MAIN SPAR UPPER WING HINGE	1	
	25-15118- 3	. WASHER, MAIN SPAR HINGE BOLT	1	
	4M36-07006	. WASHER (MDA)	1	
	4M36-07005	. WASHER (MDA)	1	
	AN320-14	. NUT	1	
	AN380-4-8	. PIN, COTTER	1	
		¤----¤-¤-¤----¤		
- 10	25-15055- 17	. . COVER ASSY, AFT WING TIP & FORMATION LIGHT, LEFT SIDE	1	A1-A6
	25-15055-301	. . COVER ASSY, AFT WING TIP & FORMATION LIGHT, LEFT SIDE	1	A7-F
	25-15055- 19	. . COVER ASSY, AFT WING TIP & FORMATION LIGHT, RIGHT SIDE	1	A1-A6
	25-15055-303	. . COVER ASSY, AFT WING TIP & FORMATION LIGHT, RIGHT SIDE	1	A7-F
		ATTACHING PARTS		
- 11	AN509-416R12	. . SCREW	2	
- 12	AN509-10R11	. . SCREW	10	
		¤----¤-¤-¤----¤		
- 13	25-15047-301	. . TIP ASSEMBLY, OUTER WING LH	1	
	25-15047-302	. . TIP ASSEMBLY, OUTER WING RH	1	
		ATTACHING PARTS		
- 14	AN509-10R11	. . SCREW	34	
		¤----¤-¤-¤----¤		
- 15	25-67303- 1	. . CONTROLS INSTALLATION, OUTER WING SLAT LH, SEE FIG. 8	1	
	25-67303- 2	. . CONTROLS INSTALLATION, OUTER WING SLAT RH, SEE FIG. 8	1	
- 16	25-61400- 1	. . CONTROLS INSTL, OUTER WING SURFACE LH, SEE FIG. 10	1	
	25-61400- 2	. . CONTROLS INSTL, OUTER WING SURFACE RH, SEE FIG. 10	1	
- 17	25-69007- 1	. . HYDRAULIC INSTALLATION, OUTER WING LH, SEE FIG. 11	1	A
	25-69007-301	. . HYDRAULIC INSTALLATION, OUTER WING LH, SEE FIG. 11	1	B-F
	25-69007- 2	. . HYDRAULIC INSTALLATION, OUTER WING RH, SEE FIG. 11	1	A
	25-69007-302	. . HYDRAULIC INSTALLATION, OUTER WING RH, SEE FIG. 11	1	B-F
- 18	25-74000- 1	. . WIRING INSTALLATION, OUTER WING LH, SEE FIG. 13	1	

FIGURE & INDEX NUMBER	PART NUMBER	1 2 3 4 5 6 7 DESCRIPTION	UNITS PER ASS'Y	USABLE ON CODE
2 -	25-74000- 2	• • WIRING INSTALLATION, OUTER WING RH, SEE FIG. 13	1	
- 19	25-15002- 1	• • WING ASSEMBLY, OUTER STRUCTURAL LH, SEE FIG. 4	1	
	25-15002- 2	• • WING ASSEMBLY, OUTER STRUCTURAL RH, SEE FIG. 4	1	

FIGURE & INDEX NUMBER	PART NUMBER	1 2 3 4 5 6 7 DESCRIPTION	UNITS PER ASS'Y	USABLE ON CODE
3 -	25-17000- 1	AILERON INSTL, OUTER WING LH, SEE FIG. 2-1 FOR NEXT HIGHER ASSY	REF	
	25-17000- 2	AILERON INSTL, OUTER WING RH, SEE FIG. 2-1 FOR NEXT HIGHER ASSY	REF	
- 1	25-17001-301	• AILERON ASSEMBLY, OUTER WING LH	1	
	25-17001-302	• AILERON ASSEMBLY, OUTER WING RH	1	
		ATTACHING PARTS		
- 2	AN253-4-5707	• PIN, HINGE	1	
- 3	AN253-4-3829	• PIN, HINGE	1	
		¤----¤-¤-¤----¤		
- 4	25-17048- 3	• • CAP, AILERON HINGE LH	1	
	25-17048- 4	• • CAP, AILERON HINGE RH	1	
		ATTACHING PARTS		
- 5	AN509-10R10	• • SCREW	3	
	AN960D10L	• • WASHER	3	
	AN365-1032	• • NUT	3	
		¤----¤-¤-¤----¤		
- 6	25-17006- 1	• • WEIGHT ASSEMBLY, AILERON INBOARD BALANCE LH	1	
	25-17006- 2	• • WEIGHT ASSEMBLY, AILERON INBOARD BALANCE RH	1	
		ATTACHING PARTS		
	AN4-25A	• • BOLT	1	
	AN960D416L	• • WASHER	1	
	AN960D416	• • WASHER	2	
	AN365-428	• • NUT	1	
		¤----¤-¤-¤----¤		
- 7	25-17005- 1	• • WEIGHT ASSY, AILERON OUTBOARD BALANCE LH	1	
	25-17005- 2	• • WEIGHT ASSY, AILERON OUTBOARD BALANCE RH	1	
		ATTACHING PARTS		
	AN4-24A	• • BOLT	1	
	AN960D416	• • WASHER	3	
	AN365-428	• • NUT	1	
		¤----¤-¤-¤----¤		
	25-17002-301	• • AILERON ASSEMBLY, STRUCTURAL LH	1	
	25-17002-302	• • AILERON ASSEMBLY, STRUCTURAL RH	1	
	25-17002- 37	• • • HINGE ASSY LH	1	
	25-17002- 38	• • • HINGE ASSY RH	1	
- 8	25-17003- 7	• • • • HINGE, AILERON LH	1	
	25-17003- 8	• • • • HINGE, AILERON RH	1	
- 9	25-17051- 1	• • • DOOR ASSY, AIL. BALANCE WT BOLT ACCESS	4	
		ATTACHING PARTS		
	AN509-10R8	• • • SCREW	4	
		¤----¤-¤-¤----¤		
- 10	25-17002- 47	• • • DOOR, INBOARD BALANCE WEIGHT ACCESS LH	1	
	25-17002- 48	• • • DOOR, INBOARD BALANCE WEIGHT ACCESS RH	1	
		ATTACHING PARTS		
- 11	AN509-10R8	• • • SCREW	4	
		¤----¤-¤-¤----¤		
- 12	25-17007- 1	• • • FITTING ASSY, AILERON INBOARD BALANCE WEIGHT LH	1	
	25-17007- 2	• • • FITTING ASSY, AILERON INBOARD BALANCE WEIGHT RH	1	
- 13	25-17002- 57	• • • DOOR, OUTBOARD BALANCE WEIGHT ACCESS LH	1	
	25-17002- 58	• • • DOOR, OUTBOARD BALANCE WEIGHT ACCESS RH	1	
		ATTACHING PARTS		
- 14	AN509-10R8	• • • SCREW	4	
		¤----¤-¤-¤----¤		
- 15	25-17008- 1	• • • FITTING ASSY, AILERON OUTBOARD BALANCE WEIGHT LH	1	
	25-17008- 2	• • • FITTING ASSY, AILERON OUTBOARD BALANCE WEIGHT RH	1	
- 16	25-17037- 7	• • • FITTING, AILERON DRIVE LH	1	
	25-17037- 8	• • • FITTING, AILERON DRIVE RH	1	
		ATTACHING PARTS		
- 17	25-17011- 3	• • • BOLT, AIL. DR FITTING CENTER ATTACHING	4	
	AN960D816	• • • WASHER	8	
	AN364-820	• • • NUT	4	
	AN8-12A	• • • BOLT, FWD & AFT	8	
	AN960D816L	• • • WASHER	8	
	AN960D816	• • • WASHER	8	
	AN365-820	• • • NUT	8	
		¤----¤-¤-¤----¤		

Outer Wing

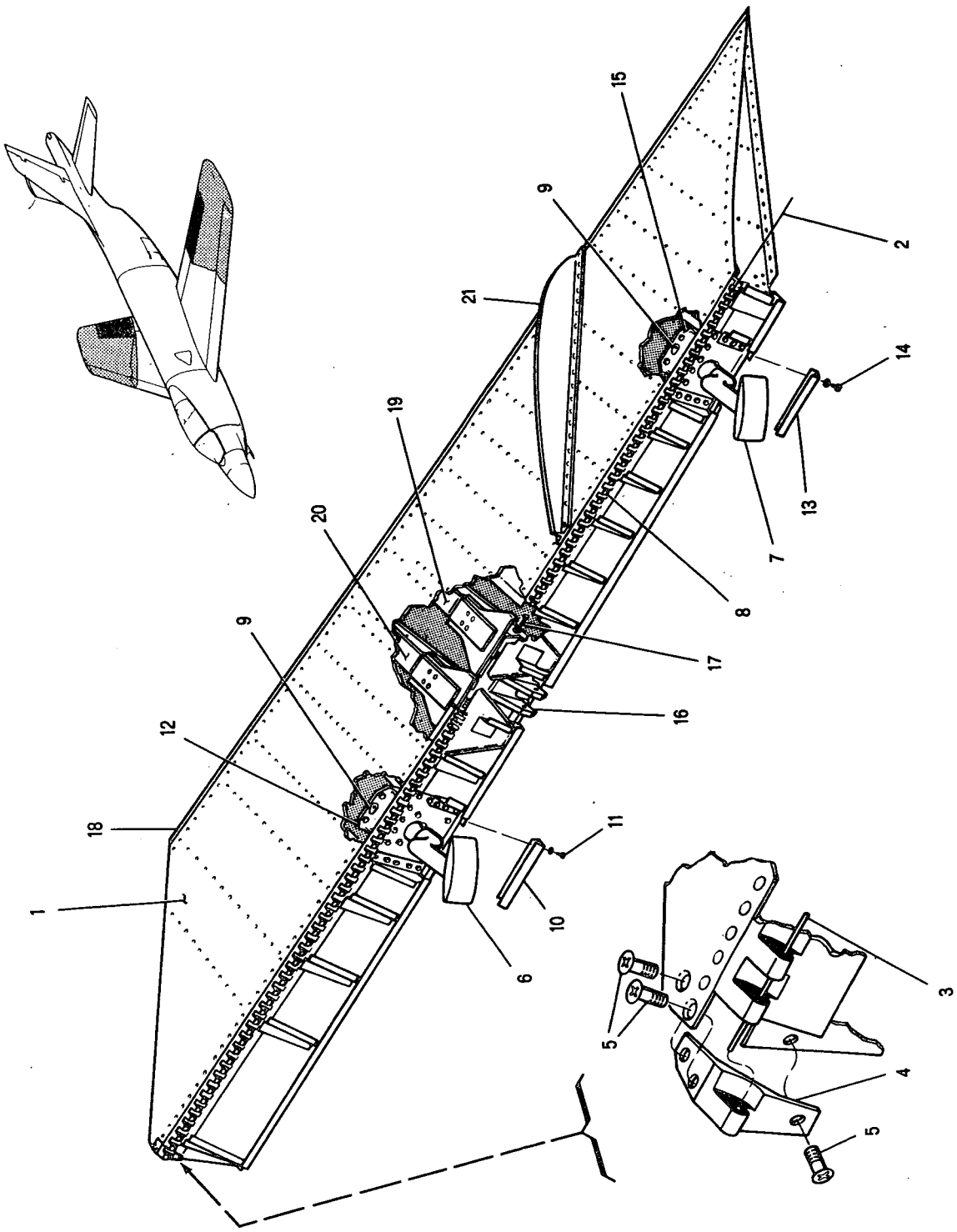

PC25-05

Figure 3 -- Outer Wing Aileron Installation

FIGURE & INDEX NUMBER	PART NUMBER	1 2 3 4 5 6 7 DESCRIPTION	UNITS PER ASS'Y	USABLE ON CODE
3 - 18	25-17002-127	• • • EXTRUSION, TRAILING EDGE LH	1	
	25-17002-128	• • • EXTRUSION, TRAILING EDGE RH	1	
- 19	25-17004-301	• • • RIB ASSEMBLY, AILERON DRIVE OUTBOARD LH	1	
	25-17004-302	• • • RIB ASSEMBLY, AILERON DRIVE OUTBOARD RH	1	
- 20	25-17035-301	• • • RIB ASSEMBLY, AILERON DRIVE INBOARD LH	1	
	25-17035-302	• • • RIB ASSEMBLY, AILERON DRIVE INBOARD RH	1	
- 21	25-17050- 3	• • • PLATE, AILERON STALL LH	1	
	25-17050- 4	• • • PLATE, AILERON STALL RH	1	

Outer Wing

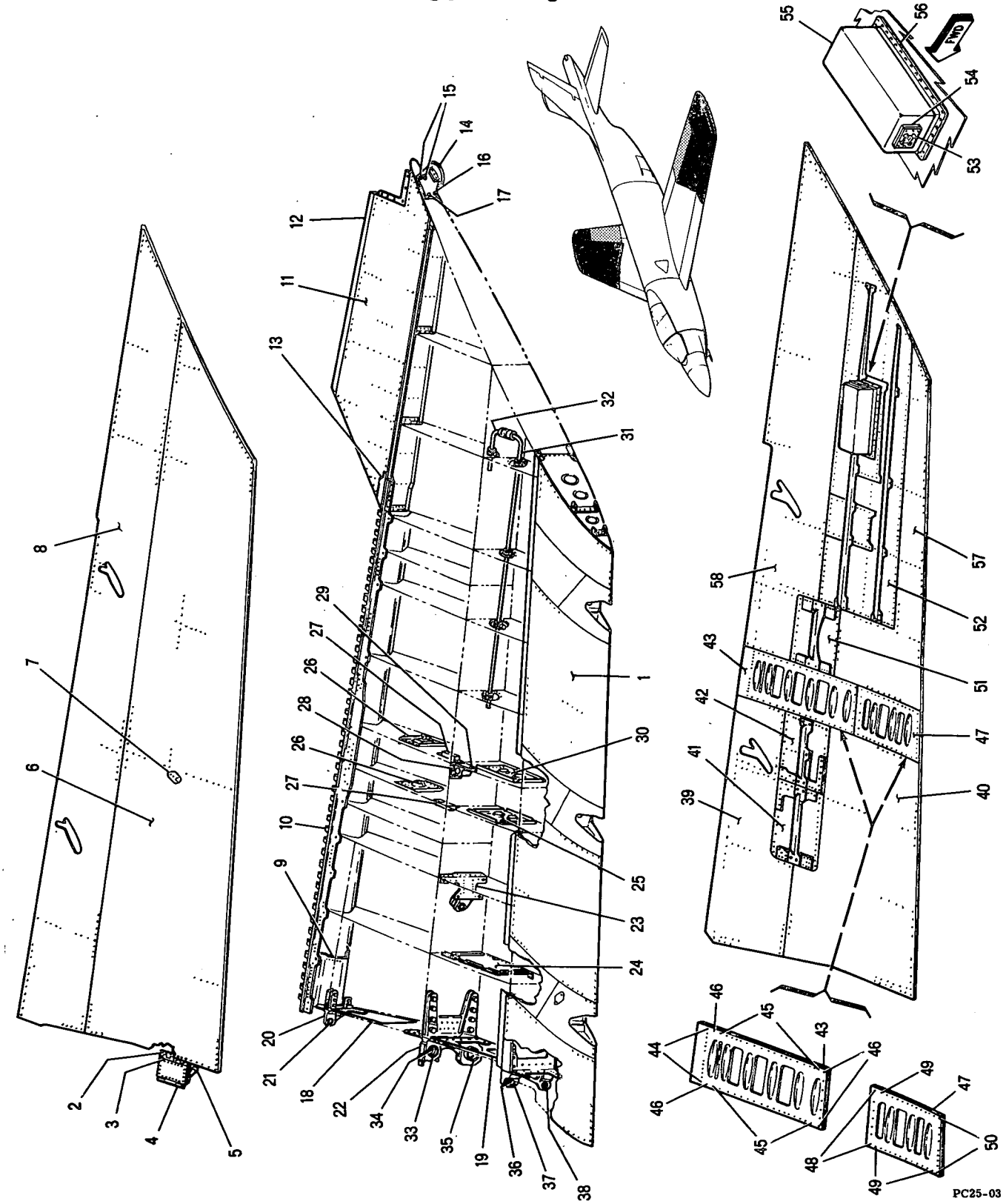

Figure 4 -- Outer Structural Wing Assembly

FIGURE & INDEX NUMBER	PART NUMBER	1 2 3 4 5 6 7 DESCRIPTION	UNITS PER ASS'Y	USABLE ON CODE
4 -	25-15002- 1	WING ASSY, OUTER STRUCTURAL LH, SEE FIG. 2-19 FOR NEXT HIGHER ASSY	REF	
	25-15002- 2	WING ASSY, OUTER STRUCTURAL RH, SEE FIG. 2-19 FOR NEXT HIGHER ASSY	REF	
- 1	25-15040- 1	. LEADING EDGE ASSY, OUTER WING LH, SEE FIG. 5	1	
	25-15040- 3	. LEADING EDGE ASSY, OUTER WING RH, SEE FIG. 5	1	
	25-15052- 1	. SEAL ASSY, WING FOLD OUTER LH	1	
	25-15052- 2	. SEAL ASSY, WING FOLD OUTER RH	1	
- 2	25-15052- 9	. . HINGE, HALF, ALTERED FROM 9M57HY4A790 (MDA)	1	
- 3	25-15052- 7	. . HINGE, HALF, ALTERED FROM 9M57HY4A790 (MDA)	1	
	AN253-2-778	. . PIN, HINGE	1	
- 4	9M55-1A731	. . STRIP, SEALING (MDA)	1	
	AN165-32RL	. . EYE, TURNBUCKLE	2	
- 5	AN155-32L	. . BARREL, TURNBUCKLE	2	
	AN165-32LL	. . EYE, TURNBUCKLE	2	
	25-15111- 1	. SKIN ASSY, OUTER WING UPPER FORWARD LH	1	
	25-15111- 2	. SKIN ASSY, OUTER WING UPPER FORWARD RH	1	
- 6	25-15111- 3	. . SKIN LH, MAKE FROM 25-15088-7 TAPERED SHEET STOCK	1	
	25-15111- 4	. . SKIN RH, MAKE FROM 25-15088-7 TAPERED SHEET STOCK	1	
- 7	25-15112- 1	. DOOR ASSY, OUTER WING HOIST FITTING ACCESS	1	
	25-15112- 5	. . SPRING	1	
	3F7-170-4	. . STUD (MKL) USE WITH 99797P.130 RECEPTACLE (MKL)	1	
	295018	. . WASHER, SPLIT (MKL)	1	
	99799	. . PIN, CROSS (MKL)	1	
	25-15114- 1	. SKIN ASSY, OUTER WING UPPER AFT LH	1	
	25-15114- 2	. SKIN ASSY, OUTER WING UPPER AFT RH	1	
- 8	25-15114- 3	. . SKIN LH, MAKE FROM 25-15104-5 TAPERED SHEET STOCK	1	
	25-15114- 4	. . SKIN RH, MAKE FROM 25-15104-5 TAPERED SHEET STOCK	1	
	25-15005- 1	. SPAR ASSY, OUTER WING REAR INBOARD LH	1	
	25-15005- 2	. SPAR ASSY, OUTER WING REAR INBOARD RH	1	
- 9	25-15005- 17	. . DOOR LH	1	
	25-15005- 18	. . DOOR RH	1	
		ATTACHING PARTS		
	NAS229-10	. . SCREW, INBD & OUTBD	16	
	NAS229-15	. . SCREW, UPPER & LOWER	19	
	NAS229-12	. . SCREW, TOP CENTER	2	
		¤----¤-¤-¤----¤		
- 10	25-15036- 3	. . HINGE, OUTER WING AILERON LH	1	
	25-15036- 4	. . HINGE, OUTER WING AILERON RH	1	
- 11	25-15037- 1	. TRAILING EDGE ASSY, OUTER WING LH	1	
	25-15037- 2	. TRAILING EDGE ASSY, OUTER WING RH	1	
- 12	25-15070- 3	. . TRAILING EDGE, OUTER WING EXTRUDED	1	
- 13	25-15037- 33	. . DOOR LH	1	
	25-15037- 34	. . DOOR RH	1	
		ATTACHING PARTS		
	AN509-10R13	. . SCREW	4	
		¤----¤-¤-¤----¤		
	25-15016- 1	. RIB ASSY, WING STATION 204.00 TIP LH	1	
	25-15016- 2	. RIB ASSY, WING STATION 204.00 TIP RH	1	
- 14	25-15048- 1	. . SKID ASSY, WING TIP LH	1	
	25-15048- 2	. . SKID ASSY, WING TIP RH	1	
		ATTACHING PARTS		
- 15	AN4-12A	. . BOLT	2	
	AN960D416L	. . WASHER	2	
	AN960D416	. . WASHER	2	
	AN365-428	. . NUT	2	
- 16	AN4-11A	. . BOLT	1	
	AN960D416L	. . WASHER	1	
	AN960D416	. . WASHER	1	
	AN365-428	. . NUT	1	
- 17	AN4-11A	. . BOLT	1	
	AN960D416L	. . WASHER	1	
	AN960D416	. . WASHER	2	
	AN365-428	. . NUT	1	
		¤----¤-¤-¤----¤		
	25-15012- 1	. RIB ASSY, OUTER WING FOLD LH	1	
	25-15012- 2	. RIB ASSY, OUTER WING FOLD RH	1	
- 18	25-15012- 21	. . DOOR LH	1	
	25-15012- 22	. . DOOR RH	1	
		ATTACHING PARTS		
	AN3-6A	. . BOLT	31	
	AN960D10	. . WASHER	31	
		¤----¤-¤-¤----¤		

FIGURE & INDEX NUMBER	PART NUMBER	1 2 3 4 5 6 7 DESCRIPTION	UNITS PER ASS'Y	USABLE ON CODE
4 - 19	25-15012- 3	• • DOOR ASSY LH	1	
	25-15012- 4	• • DOOR ASSY RH	1	
		ATTACHING PARTS		
	AN4-7A	• • BOLT	19	
	AN960D416	• • WASHER	38	
	AN4-7A	• • BOLT	26	
	AN960D416	• • WASHER	26	
	AN509-416R20	• • SCREW	2	
		¤----¤-¤-¤----¤		
	25-15098- 1	• • • SUPPORT ASSY, AILERON CONTROL WING FOLD BELL CRANK LH	1	
	25-15098- 2	• • • SUPPORT ASSY, AILERON CONTROL WING FOLD BELL CRANK RH	1	
	25-15110- 1	• BEAM ASSY, AFT WING FOLD FITTING SUPPORT LH	1	
	25-15110- 2	• BEAM ASSY, AFT WING FOLD FITTING SUPPORT RH	1	
- 20	25-15079- 3	• • FITTING, AFT WING FOLD LH	1	
	25-15079- 4	• • FITTING, AFT WING FOLD RH	1	
- 21	25-15045- 5	• BUSHING, AFT WING FOLD FITTING	1	
	25-15004- 1	• SPAR ASSY, OUTER WING MAIN LH	1	
	25-15004- 2	• SPAR ASSY, OUTER WING MAIN RH	1	
- 22	25-15010- 1	• • FITTING ASSY, OUTER WING MAIN SPAR HINGE LH	1	
	25-15010- 2	• • FITTING ASSY, OUTER WING MAIN SPAR HINGE RH	1	
	MS15001-4	• • • FITTING, LUB	1	
- 23	25-15056- 1	• • FITTING ASSY, WING FOLD ACTUATOR OUTBOARD ATTACHMENT LH	1	
	25-15056- 2	• • FITTING ASSY, WING FOLD ACTUATOR OUTBOARD ATTACHMENT RH	1	
	4M34-8-53	• • • BUSHING (MDA)	2	
	25-15064- 1	• RIB ASSY, WING STATION 124.95 MAIN SPAR FWD LH	1	
	25-15064- 2	• RIB ASSY, WING STATION 124.95 MAIN SPAR FWD RH	1	
- 24	25-15064- 37	• • DOOR ASSY LH	1	
	25-15064- 38	• • DOOR ASSY RH	1	
		ATTACHING PARTS		
	AN3-5A	• • BOLT	19	
	AN960D10	• • WASHER	19	
	AN509-416R13	• • SCREW, LOWER	11	
		¤----¤-¤-¤----¤		
	25-15060- 1	• RIB ASSY, WING STATION 144.86 FWD LH	1	
	25-15060- 2	• RIB ASSY, WING STATION 144.86 FWD RH	1	
- 25	25-15060- 5	• • DOOR LH	1	
	25-15060- 6	• • DOOR RH	1	
		ATTACHING PARTS		
	AN3-5A	• • BOLT	30	
	AN960D10	• • WASHER	30	
		¤----¤-¤-¤----¤		
	25-15061- 1	• RIB ASSY, WING STATION 144.86 AFT LH	1	
	25-15061- 2	• RIB ASSY, WING STATION 144.86 AFT RH	1	
	25-15059- 1	• RIB ASSY, WING STATION 150.42 AFT LH	1	
	25-15059- 2	• RIB ASSY, WING STATION 150.42 AFT RH	1	
- 26	25-61401- 1	• • SUPPORT ASSY, AILERON POWER CYLINDER	1	
		ATTACHING PARTS		
	AN174-7A	• • BOLT	8	
	AN960D416L	• • WASHER	8	
	AN960D416	• • WASHER	16	
	AN365-428	• • NUT	8	
	AN174-6A	• • BOLT	4	
	AN960D416L	• • WASHER	4	
	AN960D416	• • WASHER	8	
	AN365-428	• • NUT	4	
		¤----¤-¤-¤----¤		
	BSR20004G-C	• • • BEARING (SWPC)	1	
	NAS497	• • • FITTING, LUBRICATOR	1	
	NAS428H4-10	• • • BOLT	1	
	AN316-4R	• • • NUT	1	
	AN960D416	• • • WASHER	1	
	1191-4CNX1/4	• • • INSERT (AF)	1	
	25-61401- 3	• • • SUPPORT	1	
	25-61417- 3	• • • PLATE, BEARING RETAINER	1	
		ATTACHING PARTS		
	AN3-21A	• • • BOLT	4	
	AN960D10	• • • WASHER	4	
	AN364-1032	• • • NUT	4	
		¤----¤-¤-¤----¤		
- 27	25-15031- 1	• • BRACKET ASSY, AILERON HYDRAULIC SWIVEL SUPPORT	1	

FIGURE & INDEX NUMBER	PART NUMBER	1 2 3 4 5 6 7 DESCRIPTION	UNITS PER ASS'Y	USABLE ON CODE
4 -		ATTACHING PARTS		
	AN3-4A	• • BOLT	7	
	AN960D10L	• • WASHER	7	
		¤----¤-¤-¤----¤		
- 28	25-15046- 1	• FITTING ASSY, OUTER WING HOIST LH	1	
	25-15046- 2	• FITTING ASSY, OUTER WING HOIST RH	1	
		ATTACHING PARTS		
	AN3-6A	• BOLT	5	
	AN960D10L	• WASHER	5	
	AN960D10	• WASHER	5	
	AN364-1032	• NUT	5	
- 29	AN4-7A	• BOLT	1	
	AN960D416L	• WASHER	1	
	AN960D416	• WASHER	2	
	AN364-428	• NUT	1	
		¤----¤-¤-¤----¤		
	1191-12CNX1-1/8	• • INSERT (AF)	1	
	25-15058- 1	• RIB ASSY, WING STATION 150.42 FORWARD LH	1	
	25-15058- 2	• RIB ASSY, WING STATION 150.42 FORWARD RH	1	
- 30	25-15058- 5	• • DOOR LH	1	
	25-15058- 6	• • DOOR RH	1	
		ATTACHING PARTS		
	AN3-5A	• • BOLT	25	
	AN960D10	• • WASHER	25	
		¤----¤-¤-¤----¤		
	25-74052- 3	• CONDUIT INSTL, OUTER WING, LEFT SIDE ONLY	1	
	AN3058-16	• • COUPLING	1	
	AN3066-16	• • NUT, LOCK	1	
	AN3054-16	• • NUT	2	
	AN3053-16	• • FERRULE	2	
	25-76102- 3	• • LINER, POLYETHYLENE CONDUIT	4	
- 31	25-74052- 7	• • CONDUIT	1	
- 32	25-74052- 9	• • CONDUIT	1	
- 33	25-15069- 5	• BUSHING, OUTER WING MAIN SPAR UPPER WING HINGE	1	
- 34	25-15057- 3	• BUSHING, OUTER WING MAIN SPAR UPPER WING HINGE	1	
- 35	25-11121- 5	• BUSHING, OUTER WING MAIN SPAR LOWER WING HINGE	1	
- 36	25-15069- 3	• BUSHING, OUTER WING FRONT SPAR UPPER WING HINGE	1	
- 37	25-15039- 3	• BUSHING, OUTER WING FRONT SPAR UPPER WING HINGE	1	
- 38	25-11100- 5	• BUSHING, FRONT SPAR HINGE FITTING FLANGED	1	
- 39	25-15002- 75	• SKIN, LOWER LH, MAKE FROM 25-15035-23 TAPERED SKIN BLANK	1	
	25-15002- 76	• SKIN, LOWER RH, MAKE FROM 25-15035-24 TAPERED SKIN BLANK	1	
- 40	25-15002- 73	• SKIN, LOWER LH, MAKE FROM 25-15028-15 TAPERED SKIN BLANK	1	
	25-15002- 74	• SKIN, LOWER RH, MAKE FROM 25-15028-16 TAPERED SKIN BLANK	1	
	25-15067- 1	• DOOR ASSY, WING FOLD ACTUATOR ACCESS LH	1	
	25-15067- 2	• DOOR ASSY, WING FOLD ACTUATOR ACCESS RH	1	
- 41	25-15067- 3	• • DOOR ASSY, INBD LH	1	
	25-15067- 4	• • DOOR ASSY, INBD RH	1	
		ATTACHING PARTS		
	AN509-416R14	• • SCREW	36	
	AN509-616R16	• • SCREW	4	
		¤----¤-¤-¤----¤		
- 42	25-15067- 5	• • DOOR ASSY, OUTBD LH	1	
	25-15067- 6	• • DOOR ASSY, OUTBD RH	1	
		ATTACHING PARTS		
	AN509-416R14	• • SCREW	38	
	AN509-616R16	• • SCREW	4	
		¤----¤-¤-¤----¤		
	25-15030- 1	• DOOR ASSY, AILERON ACTUATOR ACCESS LH	1	
	25-15030- 2	• DOOR ASSY, AILERON ACTUATOR ACCESS RH	1	
- 43	25-15030- 3	• • DOOR ASSY, AFT LH	1	
	25-15030- 4	• • DOOR ASSY, AFT RH	1	
		ATTACHING PARTS		
- 44	AN509-10R11	• • SCREW	12	
- 45	AN509-616R15	• • SCREW	35	
- 46	AN509-516R16	• • SCREW	9	
		¤----¤-¤-¤----¤		
- 47	25-15030- 5	• • DOOR ASSY, FWD LH	1	
	25-15030- 6	• • DOOR ASSY, FWD RH	1	

FIGURE & INDEX NUMBER	PART NUMBER	1 2 3 4 5 6 7 DESCRIPTION	UNITS PER ASS'Y	USABLE ON CODE
4 -		ATTACHING PARTS		
- 48	AN509-516R16	• • SCREW	7	
- 49	AN509-616R15	• • SCREW	24	
- 50	AN509-416R14	• • SCREW	9	
		¤----¤-¤-¤-----¤		
	25-15032- 1	• DOOR ASSY, AILERON TRUNNION ACCESS OUTBD LH	1	
	25-15032- 2	• DOOR ASSY, AILERON TRUNNION ACCESS OUTBD RH	1	
- 51	25-15032- 3	• • DOOR ASSY LH	1	
	25-15032- 4	• • DOOR ASSY RH	1	
		ATTACHING PARTS		
	AN509-416R14	• • SCREW	31	
	AN509-616R15	• • SCREW	4	
		¤----¤-¤-¤-----¤		
	25-15033- 1	• PANEL ASSY, OUTER WING LOWER OUTBD SKIN LH	1	
	25-15033- 2	• PANEL ASSY, OUTER WING LOWER OUTBD SKIN RH	1	
- 52	25-15033-101	• • SKIN ASSY, LOWER OUTBD LH	1	
	25-15033-102	• • SKIN ASSY, LOWER OUTBD RH	1	
		ATTACHING PARTS		
	AN509-416R13	• • SCREW, LEFT SIDE	73	
	AN509-416R13	• • SCREW, RIGHT SIDE	65	
	AN509-10R10	• • SCREW, LEFT SIDE	183	
	AN509-10R10	• • SCREW, RIGHT SIDE	193	
		¤----¤-¤-¤-----¤		
	25-15033- 3	• • • SKIN LH, MAKE FROM 25-15034-9 TAPERED SKIN BLANK	1	
	25-15033- 4	• • • SKIN RH, MAKE FROM 25-15034-10 TAPERED SKIN BLANK	1	
	25-74057- 1	• • • HOUSING ASSY, AN/APN22 RECEIVER TRANSMITTER, LEFT SIDE ONLY	1	A-B
	25-74057-301	• • • HOUSING ASSY, AN/APN22 RECEIVER TRANSMITTER, LEFT SIDE ONLY	1	C-F
- 53	25-74058- 1	• • • • PLATE ASSY, AN/APN22 RECEIVER TRANSMITTER HOUSING	1	A-B
	25-74061- 3	• • • • PLATE, AN/APN22 RECEIVER TRANSMITTER HOUSING	1	C-F
- 54	25-74059- 3	• • • • SPACER, AN/APN22 RECEIVER TRANSMITTER HOUSING	1	A-B
- 55	CY1409/APN22	• • • • HOUSING, AN/APN22 RECEIVER TRANSMITTER, GFP	1	
- 56	25-74060- 3	• • • • GASKET, AN/APN22 RECEIVER TRANSMITTER HOUSING	1	C-F
- 57	25-15002- 81	• SKIN, LOWER LH, MAKE FROM 25-15034-5 TAPERED SKIN BLANK	1	
	25-15002- 82	• SKIN, LOWER RH, MAKE FROM 25-15034-6 TAPERED SKIN BLANK	1	
- 58	25-15002- 79	• SKIN, LOWER LH, MAKE FROM 25-15038-3 TAPERED SHEET STOCK	1	
	25-15002- 80	• SKIN, LOWER RH, MAKE FROM 25-15038-3 TAPERED SHEET STOCK	1	

FIGURE & INDEX NUMBER	PART NUMBER	1 2 3 4 5 6 7 DESCRIPTION	UNITS PER ASS'Y	USABLE ON CODE
5 -	25-15040- 1	LEADING EDGE ASSY, OUTER WING LH, SEE FIG. 4-1 FOR NEXT HIGHER ASSEMBLY	REF	
	25-15040- 3	LEADING EDGE ASSY, OUTER WING RH, SEE FIG. 4-1 FOR NEXT HIGHER ASSEMBLY	REF	
- 1	25-15040- 5	• LEADING EDGE ASSY, INBOARD LEFT SIDE	1	
	25-15040- 7	• LEADING EDGE ASSY, INBOARD RIGHT SIDE	1	
	25-15102- 1	• SUPPORT ASSY, HYDRAULIC CROSS OVER & FWD SEAL LEFT SIDE	1	A
	25-15102-301	• SUPPORT ASSY, HYDRAULIC CROSS OVER & FWD SEAL LEFT SIDE	1	B-F
	25-15102- 3	• SUPPORT ASSY, HYDRAULIC CROSS OVER & FWD SEAL RIGHT SIDE	1	A
	25-15102-303	• SUPPORT ASSY, HYDRAULIC CROSS OVER & FWD SEAL RIGHT SIDE	1	B-F
- 2	25-15102- 47	• • DOOR LH	1	
	25-15102- 48	• • DOOR RH	1	
		ATTACHING PARTS		
	AN3-6A	• • BOLT	9	
	AN960D10	• • WASHER	9	
		¤----¤-¤-¤----¤		
- 3	25-15102- 49	• • SEAL, SELECTED FROM 9M55A (MDA)	1	
	25-15115- 1	• DOOR ASSY, ARMAMENT SAFETY OVERRIDE SWITCH ACCESS, LEFT SIDE ONLY	1	
		ATTACHING PARTS		
	AN509-10R10	• SCREW	2	
	AN960D10	• WASHER	4	
	AN365-1032	• NUT	2	
		¤----¤-¤-¤----¤		
- 4	98265-1-.140	• • STUD (MKL) USE WITH 99947P.130 RECEPTACLE (MKL)	1	
	99836	• • PIN, CROSS (MKL) USE WITH INDEX 4	1	
- 5	25-15115- 5	• • HINGE, HALF, ALTERED FROM GOVERNMENT STANDARD PART NO. MS20001PH4-250	1	
- 6	25-15115- 9	• • HINGE, HALF, ALTERED FROM GOVERNMENT STANDARD PART NO. MS20001PH4-250	1	
	AN253-2-250	• • PIN, HINGE	1	
	25-89062- 3	• • NAMEPLATE, ARMAMENT SAFETY DISABLING SWITCH INSTRUCTION	1	
- 7	25-15040- 13	• DOOR ASSY, LOWER LH	1	
	25-15040- 14	• DOOR ASSY, LOWER RH	1	
		ATTACHING PARTS		
	AN509-10R11	• SCREW	23	
	AN509-416R13	• SCREW	5	
		¤----¤-¤-¤----¤		
	25-15042- 1	• SUPPORT ASSY, INBOARD SLAT TRACK LH	1	A
	25-15042-301	• SUPPORT ASSY, INBOARD SLAT TRACK LH	1	B-F
	25-15042- 2	• SUPPORT ASSY, INBOARD SLAT TRACK RH	1	A
	25-15042-302	• SUPPORT ASSY, INBOARD SLAT TRACK RH	1	B-F
- 8	25-15042- 5	• • DOOR ASSEMBLY LH	1	A
	25-15042-147	• • DOOR ASSEMBLY LH	1	B-F
	25-15042- 6	• • DOOR ASSEMBLY RH	1	A
	25-15042-148	• • DOOR ASSEMBLY RH	1	B-F
		ATTACHING PARTS		
	AN509-416R13	• • SCREW	4	
	AN509-10R11	• • SCREW	40	
		¤----¤-¤-¤----¤		
- 9	25-15042-107	• • • SEAL, SELECTED FROM 9M79B (MDA)	1	
- 10	25-15042-109	• • • SEAL LH, SELECTED FROM 9M79B (MDA)	1	
	25-15042-110	• • • SEAL RH, SELECTED FROM 9M79B (MDA)	1	
- 11	25-15042-105	• • • SEAL, SELECTED FROM 9M79B (MDA)	1	
- 12	25-15042-103	• • • SEAL LH, SELECTED FROM 9M79B (MDA)	1	
	25-15042-104	• • • SEAL RH, SELECTED FROM 9M79B (MDA)	1	
- 13	25-15042- 3	• • DOOR ASSEMBLY LH	1	
	25-15042- 4	• • DOOR ASSEMBLY RH	1	
		ATTACHING PARTS		
	AN509-416R13	• • SCREW	11	
	AN509-10R11	• • SCREW	18	
		¤----¤-¤-¤----¤		
- 14	25-19506- 3	• • CARRIAGE ASSY, OUTER WING SLAT TRACK AFT ROLLER LH, SEE FIG. 6	1	
	25-19506- 4	• • CARRIAGE ASSY, OUTER WING SLAT TRACK AFT ROLLER RH, SEE FIG. 6	1	

Outer Wing

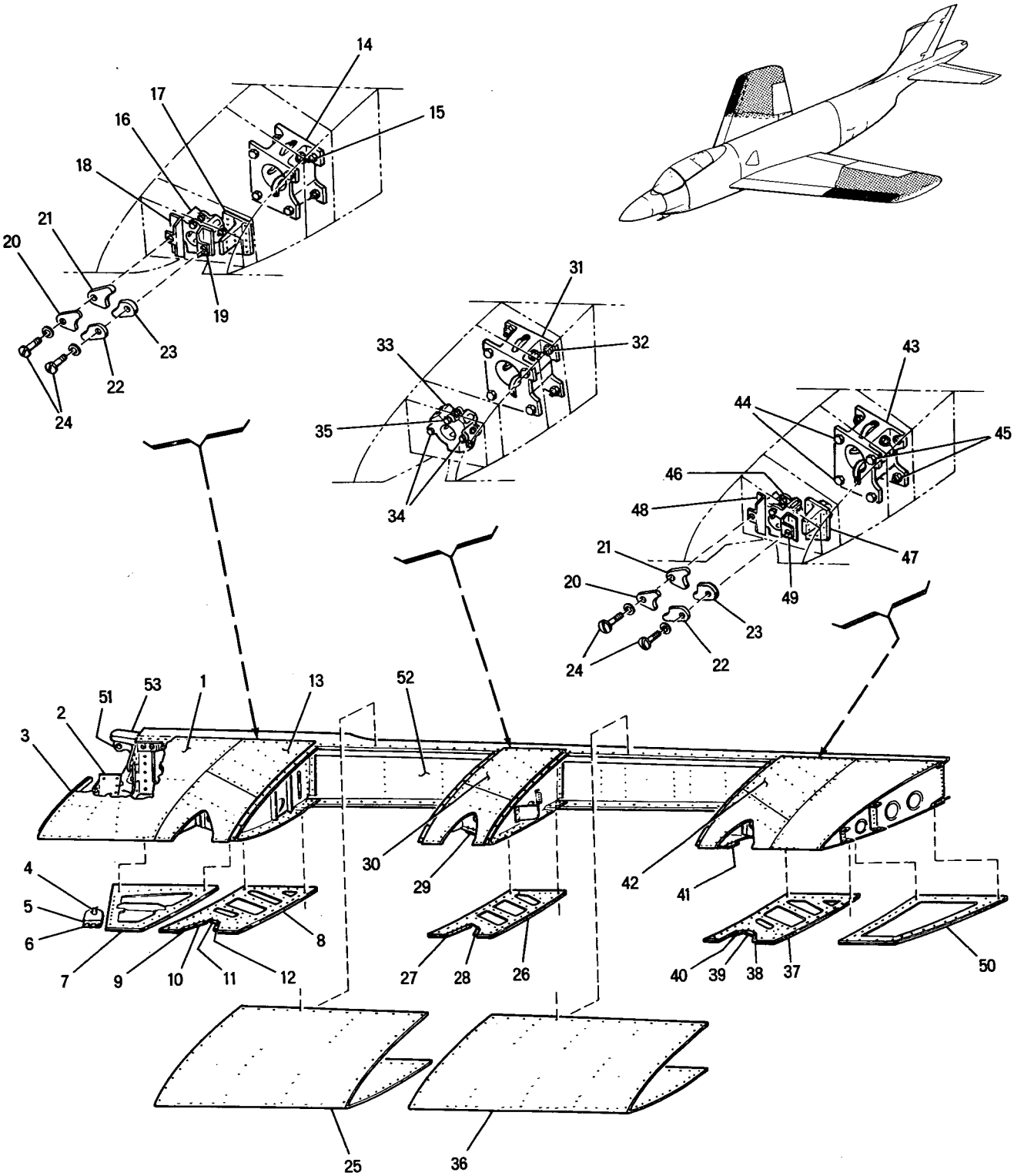

Figure 5 -- Outer Wing Leading Edge Assembly

FIGURE & INDEX NUMBER	PART NUMBER	1 2 3 4 5 6 7 DESCRIPTION	UNITS PER ASS'Y	USABLE ON CODE
5 -		ATTACHING PARTS		
- 15	AN3-5A	• • BOLT, OUTBOARD	4	
	AN960D10L	• • WASHER	4	
	AN960D10	• • WASHER	8	
	AN365-1032	• • NUT	4	
	AN3-5A	• • BOLT, INBOARD	4	
	AN960D10L	• • WASHER	4	
	AN960D10	• • WASHER	4	
	AN365-1032	• • NUT	4	
		¤----¤-¤-¤----¤		
- 16	25-19505- 1	• • CARRIAGE ASSY, OUTER WING SLAT TRACK FWD ROLLER, SEE FIG. 6	1	
		ATTACHING PARTS		
	AN4-10A	• • BOLT, FWD	2	
	AN960D416L	• • WASHER	2	
	AN960D416	• • WASHER	4	
	AN365-428	• • NUT	2	
	AN4-6A	• • BOLT, AFT INBOARD	1	
	AN960D416L	• • WASHER	1	
	AN960D416	• • WASHER	2	
	AN365-428	• • NUT	1	
	AN24-44A	• • BOLT, CENTER	1	
	AN960D416	• • WASHER	2	
	AN364-428	• • NUT	1	
	AN4-7A	• • BOLT, AFT OUTBOARD	1	
	AN960D416L	• • WASHER	1	
	AN960D416	• • WASHER	1	
	AN365-428	• • NUT	1	
		¤----¤-¤-¤----¤		
- 17	25-19519- 5	• • FITTING, OUTER WING SLAT ACTUATOR SUP. LH	1	
	25-19519- 6	• • FITTING, OUTER WING SLAT ACTUATOR SUP. RH	1	
- 18	25-15123- 5	• • BUMPER ASSY, OUTER WING SLAT UPSTOP INBD LH	1	
	25-15123- 6	• • BUMPER ASSY, OUTER WING SLAT UPSTOP INBD RH	1	
- 19	25-15122- 5	• • BUMPER ASSY, OUTER WING SLAT UPSTOP OUTBD LH	1	
	25-15122- 6	• • BUMPER ASSY, OUTER WING SLAT UPSTOP OUTBD RH	1	
- 20	25-11196- 5	• SHIM, LEADING EDGE WING SLAT INBD UPSTOP	2	
- 21	25-11196- 3	• SHIM, LEADING EDGE WING SLAT INBD UPSTOP	2	
- 22	25-11195- 5	• SHIM, LEADING EDGE WING SLAT OUTBD UPSTOP	2	
- 23	25-11195- 3	• SHIM, LEADING EDGE WING SLAT OUTBD UPSTOP	2	
		ATTACHING PARTS		
- 24	NAS229-11	• SCREW	4	
	AN960D10L	• WASHER	4	
		¤----¤-¤-¤----¤		
- 25	25-15040- 9	• LEADING EDGE ASSY LH	1	
	25-15040- 10	• LEADING EDGE ASSY RH	1	
		ATTACHING PARTS		
	AN509-10R11	• SCREW	53	
	AN509-416R13	• SCREW	11	
		¤----¤-¤-¤----¤		
	25-15113- 1	• SUPPORT ASSY, OUTER WING INTERMEDIATE SLAT TRACK LH	1	A
	25-15113-301	• SUPPORT ASSY, OUTER WING INTERMEDIATE SLAT TRACK LH	1	B-F
	25-15113- 2	• SUPPORT ASSY, OUTER WING INTERMEDIATE SLAT TRACK RH	1	A
	25-15113-302	• SUPPORT ASSY, OUTER WING INTERMEDIATE SLAT TRACK RH	1	B-F
- 26	25-15113- 3	• • DOOR ASSY LH	1	A
	25-15113- 95	• • DOOR ASSY LH	1	B-F
	25-15113- 4	• • DOOR ASSY RH	1	A
	25-15113- 96	• • DOOR ASSY RH	1	B-F
		ATTACHING PARTS		
	AN509-10R11	• • SCREW	33	
	AN509-416R13	• • SCREW	4	
		¤----¤-¤-¤----¤		
- 27	25-15113- 25	• • • SEAL LH, SELECTED FROM 9M79B (MDA)	1	
	25-15113- 26	• • • SEAL RH, SELECTED FROM 9M79B (MDA)	1	
- 28	25-15113- 23	• • • SEAL LH, SELECTED FROM 9M79B (MDA)	1	
	25-15113- 24	• • • SEAL RH, SELECTED FROM 9M79B (MDA)	1	
- 29	25-15113- 79	• • SEAL	1	
- 30	25-15113- 5	• • DOOR ASSEMBLY LH	1	
	25-15113- 6	• • DOOR ASSEMBLY RH	1	

FIGURE & INDEX NUMBER	PART NUMBER	1 2 3 4 5 6 7 DESCRIPTION	UNITS PER ASS'Y	USABLE ON CODE
5 -		ATTACHING PARTS		
	AN509-10R11	• • SCREW	22	
	AN509-416R13	• • SCREW	6	
		¤----¤-¤-¤----¤		
- 31	25-19506- 1	• • CARRIAGE ASSY, OUTER WING SLAT TRACK AFT ROLLER LH, SEE FIG. 6	1	
	25-19506- 2	• • CARRIAGE ASSY, OUTER WING SLAT TRACK AFT ROLLER RH, SEE FIG. 6	1	
		ATTACHING PARTS		
- 32	AN3-5A	• • BOLT	8	
	AN960D10L	• • WASHER	8	
	AN960D10	• • WASHER	16	
	AN365-1032	• • NUT	8	
		¤----¤-¤-¤----¤		
- 33	25-19505- 1	• • CARRIAGE ASSY, OUTER WING SLAT TRACK FWD ROLLER, SEE FIG. 6	1	
		ATTACHING PARTS		
- 34	AN4-6A	• • BOLT	4	
	AN960D416L	• • WASHER	4	
	AN960D416	• • WASHER	8	
	AN365-428	• • NUT	4	
- 35	AN24-44A	• • BOLT	1	
	AN960D416	• • WASHER	2	
	AN364-428	• • NUT	1	
		¤----¤-¤-¤----¤		
- 36	25-15040- 11	• LEADING EDGE ASSY LH	1	
	25-15040- 12	• LEADING EDGE ASSY RH	1	
		ATTACHING PARTS		
	AN509-10R11	• SCREW	60	
	AN509-10R7	• SCREW	2	
	AN509-416R13	• SCREW	10	
		¤----¤-¤-¤----¤		
	25-15043- 1	• SUPPORT ASSY, OUTBOARD SLAT TRACK LH	1	A
	25-15043-301	• SUPPORT ASSY, OUTBOARD SLAT TRACK LH	1	B-F
	25-15043- 2	• SUPPORT ASSY, OUTBOARD SLAT TRACK RH	1	A
	25-15043-302	• SUPPORT ASSY, OUTBOARD SLAT TRACK RH	1	B-F
- 37	25-15043- 5	• • DOOR ASSY LH	1	A
	25-15043-111	• • DOOR ASSY LH	1	B-F
	25-15043- 6	• • DOOR ASSY RH	1	A
	25-15043-112	• • DOOR ASSY RH	1	B-F
		ATTACHING PARTS		
	AN509-10R11	• • SCREW	39	
	AN509-416R13	• • SCREW	4	
		¤----¤-¤-¤----¤		
- 38	25-15043- 85	• • • SEAL LH, SELECTED FROM 9M79B (MDA)	1	
	25-15043- 86	• • • SEAL RH, SELECTED FROM 9M79B (MDA)	1	
- 39	25-15043- 29	• • • SEAL, SELECTED FROM 9M79B (MDA)	1	
- 40	25-15043- 83	• • • SEAL LH, SELECTED FROM 9M79B (MDA)	1	
	25-15043- 84	• • • SEAL RH, SELECTED FROM 9M79B (MDA)	1	
- 41	25-15043- 27	• • SEAL, SELECTED FROM 9M79B (MDA)	1	
- 42	25-15043- 3	• • DOOR ASSEMBLY LH	1	
	25-15043- 4	• • DOOR ASSEMBLY RH	1	
		ATTACHING PARTS		
	AN509-10R11	• • SCREW	26	
	AN509-416R13	• • SCREW	7	
		¤----¤-¤-¤----¤		
- 43	25-19506- 3	• • CARRIAGE ASSY, OUTER WING SLAT TRACK AFT ROLLER LH, SEE FIG. 6	1	
	25-19506- 4	• • CARRIAGE ASSY, OUTER WING SLAT TRACK AFT ROLLER RH, SEE FIG. 6	1	
		ATTACHING PARTS		
- 44	AN3-5A	• • BOLT, INBOARD	4	
	AN960D10L	• • WASHER	4	
	AN960D10	• • WASHER	8	
	AN365-1032	• • WASHER	4	
- 45	AN3-5A	• • BOLT, OUTBOARD	4	
	AN960D10L	• • WASHER	4	
	AN960D10	• • WASHER	4	
	AN365-1032	• • NUT	4	
		¤----¤-¤-¤----¤		
- 46	25-19505- 1	• • CARRIAGE ASSY, OUTER WING SLAT TRACK FWD ROLLER, SEE FIG. 6	1	

FIGURE & INDEX NUMBER	PART NUMBER	1 2 3 4 5 6 7 DESCRIPTION	UNITS PER ASS'Y	USABLE ON CODE
5 -		ATTACHING PARTS		
	AN4-10A	• • BOLT, FWD	2	
	AN960D416L	• • WASHER	2	
	AN960D416	• • WASHER	4	
	AN365-428	• • NUT	2	
	AN24-44A	• • BOLT, CENTER	1	
	AN960D416	• • WASHER	2	
	AN364-428	• • NUT	1	
	AN4-7A	• • BOLT, AFT OUTBOARD	1	
	AN960D416L	• • WASHER	1	
	AN960D416	• • WASHER	1	
	AN365-428	• • NUT	1	
	AN4-6A	• • BOLT, AFT INBOARD	1	
	AN960D416L	• • WASHER	1	
	AN960D416	• • WASHER	2	
	AN365-428	• • NUT	1	
		¤----¤-¤-¤----¤		
- 47	25-19519- 3	• • FITTING, OUTER WING SLAT ACTUATOR SUP, LH	1	
	25-19519- 4	• • FITTING, OUTER WING SLAT ACTUATOR SUP, RH	1	
- 48	25-15123- 3	• • BUMPER ASSY, OUTER WING SLAT UPSTOP INBD LH	1	
	25-15123- 4	• • BUMPER ASSY, OUTER WING SLAT UPSTOP INBD RH	1	
- 49	25-15122- 3	• • BUMPER ASSY, OUTER WING SLAT UPSTOP OUTBD LH	1	
	25-15122- 4	• • BUMPER ASSY, OUTER WING SLAT UPSTOP OUTBD RH	1	
- 50	25-15040- 15	• DOOR ASSY, LOWER LH	1	
	25-15040- 16	• DOOR ASSY, LOWER RH	1	
		ATTACHING PARTS		
	AN509-10R13	• SCREW	25	
	AN509-416R13	• SCREW	6	
		¤----¤-¤-¤----¤		
	25-15003- 1	• SPAR ASSY, OUTER WING FRONT LH	1	A
	25-15003-301	• SPAR ASSY, OUTER WING FRONT LH	1	B-F
	25-15003- 2	• SPAR ASSY, OUTER WING FRONT RH	1	A
	25-15003-302	• SPAR ASSY, OUTER WING FRONT RH	1	B-F
- 51	25-15011- 1	• • FITTING ASSY, OUTER WING FRONT SPAR HINGE LH	1	
	25-15011- 2	• • FITTING ASSY, OUTER WING FRONT SPAR HINGE RH	1	
	NAS497	• • • FITTING, LUBRICATOR	1	
- 52	25-15003- 3	• • WEB	1	
- 53	25-15140- 3	• SPACER, OUTER WING LEADING EDGE LH	1	
	25-15140- 4	• SPACER, OUTER WING LEADING EDGE RH	1	

Outer Wing

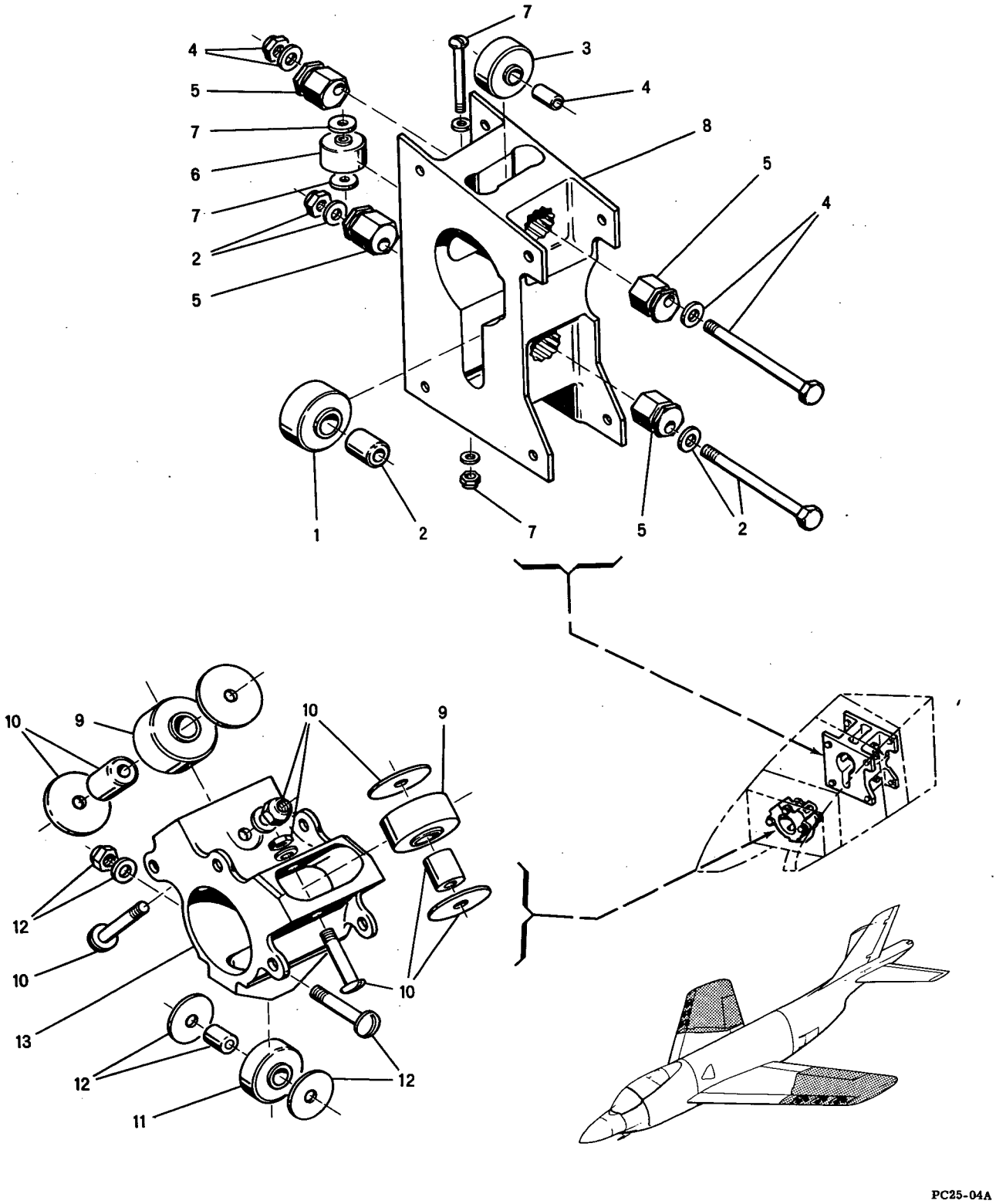

Figure 6 - Outer Wing Slat Forward and Aft Carriage Assemblies

FIGURE & INDEX NUMBER	PART NUMBER	1 2 3 4 5 6 7 DESCRIPTION	UNITS PER ASS'Y	USABLE ON CODE
6 -	25-19506- 1	CARRIAGE ASSEMBLY, OUTER WING SLAT TRACK AFT ROLLER LH, SEE FIG. 5-31 FOR NEXT HIGHER ASSEMBLY	REF	
	25-19506- 3	CARRIAGE ASSEMBLY, OUTER WING SLAT TRACK AFT ROLLER LH, SEE FIG. 5-14 & 5-43 FOR NEXT HIGHER ASSEMBLY	REF	
	25-19506- 2	CARRIAGE ASSEMBLY, OUTER WING SLAT TRACK AFT ROLLER RH, SEE FIG. 5-31 FOR NEXT HIGHER ASSEMBLY	REF	
	25-19506- 4	CARRIAGE ASSEMBLY, OUTER WING SLAT TRACK AFT ROLLER RH, SEE FIG. 5-14 & 5-43 FOR NEXT HIGHER ASSEMBLY	REF	
- 1	8NBF1021	• ROLLER (RBC)	1	
		ATTACHING PARTS		
- 2	AN4-26A	• BOLT	1	
	AN960D416	• WASHER	2	
	25-19013- 5	• BUSHING, SLAT TRACK ROLLER	1	
	AN364-428	• NUT	1	
		¤----¤-¤-¤----¤		
- 3	6NBF817	• ROLLER (RBC)	1	
		ATTACHING PARTS		
- 4	AN4-26A	• BOLT	1	
	AN960D416	• WASHER	2	
	25-19013- 3	• BUSHING, SLAT TRACK ROLLER	1	
	AN364-428	• NUT	1	
		¤----¤-¤-¤----¤		
- 5	25-19511- 3	• BUSHING, SLAT TRACK AFT ROLLER ECCENTRIC	4	
- 6	AN207DP3	• BEARING	1	
		ATTACHING PARTS		
- 7	AN23-24A	• BOLT	1	
	AN960D10	• WASHER	4	
	AN364-1032	• NUT	1	
		¤----¤-¤-¤----¤		
- 8	25-19502- 3	• FRAME, OUTER WING SLAT CARRIAGE LH	1	25-19506-1
	25-19502- 5	• FRAME, OUTER WING SLAT CARRIAGE LH	1	25-19506-3
	25-19502- 4	• FRAME, OUTER WING SLAT CARRIAGE RH	1	25-19506-2
	25-19502- 6	• FRAME, OUTER WING SLAT CARRIAGE RH	1	25-19506-4
	25-19505- 1	CARRIAGE ASSEMBLY, OUTER WING SLAT TRACK FORWARD ROLLER, SEE FIG. 5-16, 5-33 & 5-46 FOR NEXT HIGHER ASSEMBLY	REF	
- 9	8NBF1021	• ROLLER (RBC)	2	
		ATTACHING PARTS		
- 10	AN24-21A	• BOLT	2	
	25-19013- 5	• BUSHING, SLAT TRACK ROLLER	2	
	4M36-02027	• WASHER (MDA)	AR	
	AN960-416	• WASHER	2	
	AN364-428	• NUT	2	
		¤----¤-¤-¤----¤		
- 11	6NBF817	• ROLLER (RBC)	1	
		ATTACHING PARTS		
- 12	AN24-18A	• BOLT	1	
	25-19013- 3	• BUSHING, SLAT TRACK ROLLER	1	
	4M36-02025	• WASHER (MDA)	AR	
	AN960-416	• WASHER	1	
	AN364-428	• NUT	1	
		¤----¤-¤-¤----¤		
- 13	25-19504- 3	• CARRIAGE, OUTER WING SLAT TRACK FORWARD ROLLER	1	

Outer Wing

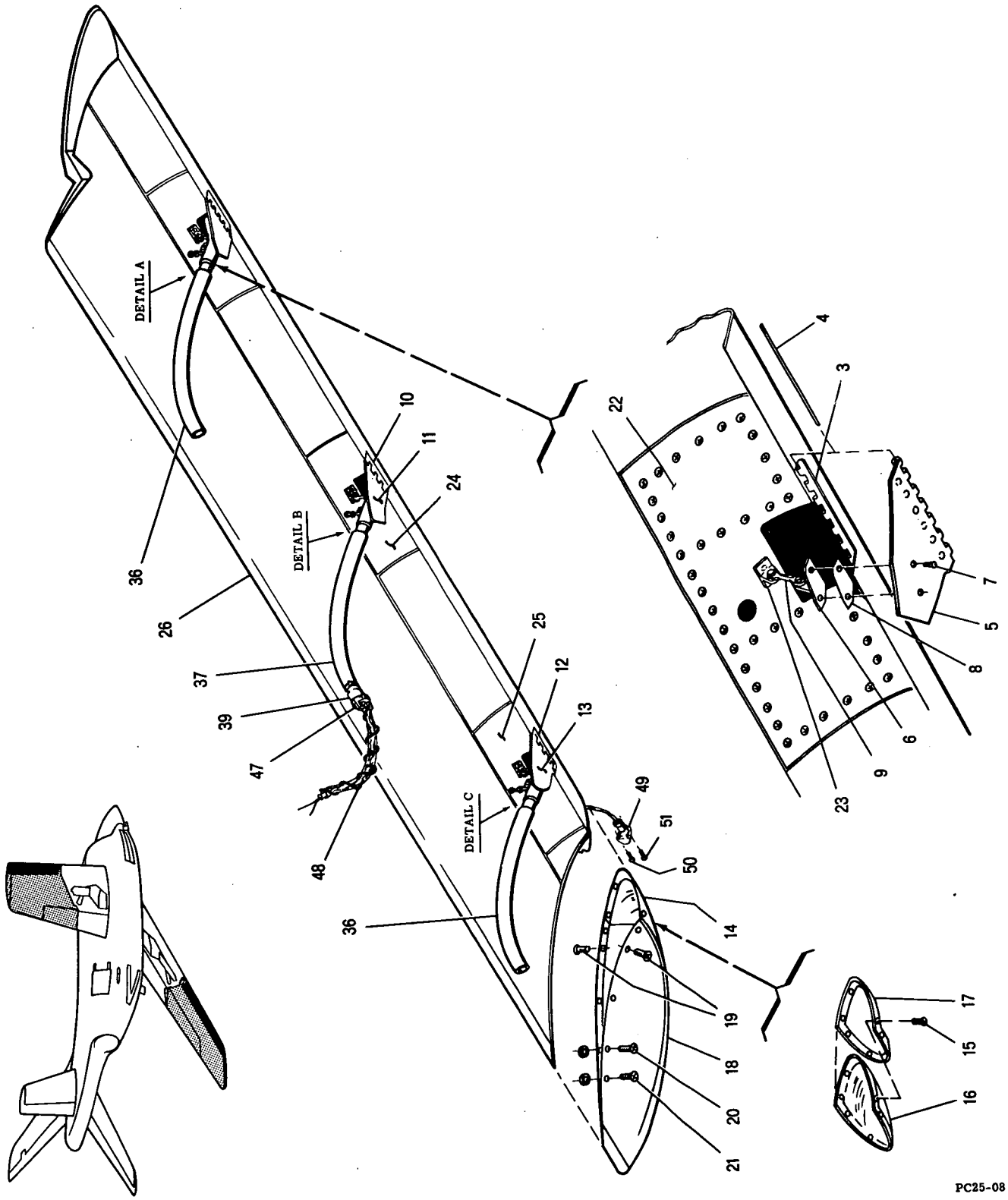

Figure 7 -- Outer Wing Leading Edge Slat Assembly (Sheet 1 of 2)

Outer Wing

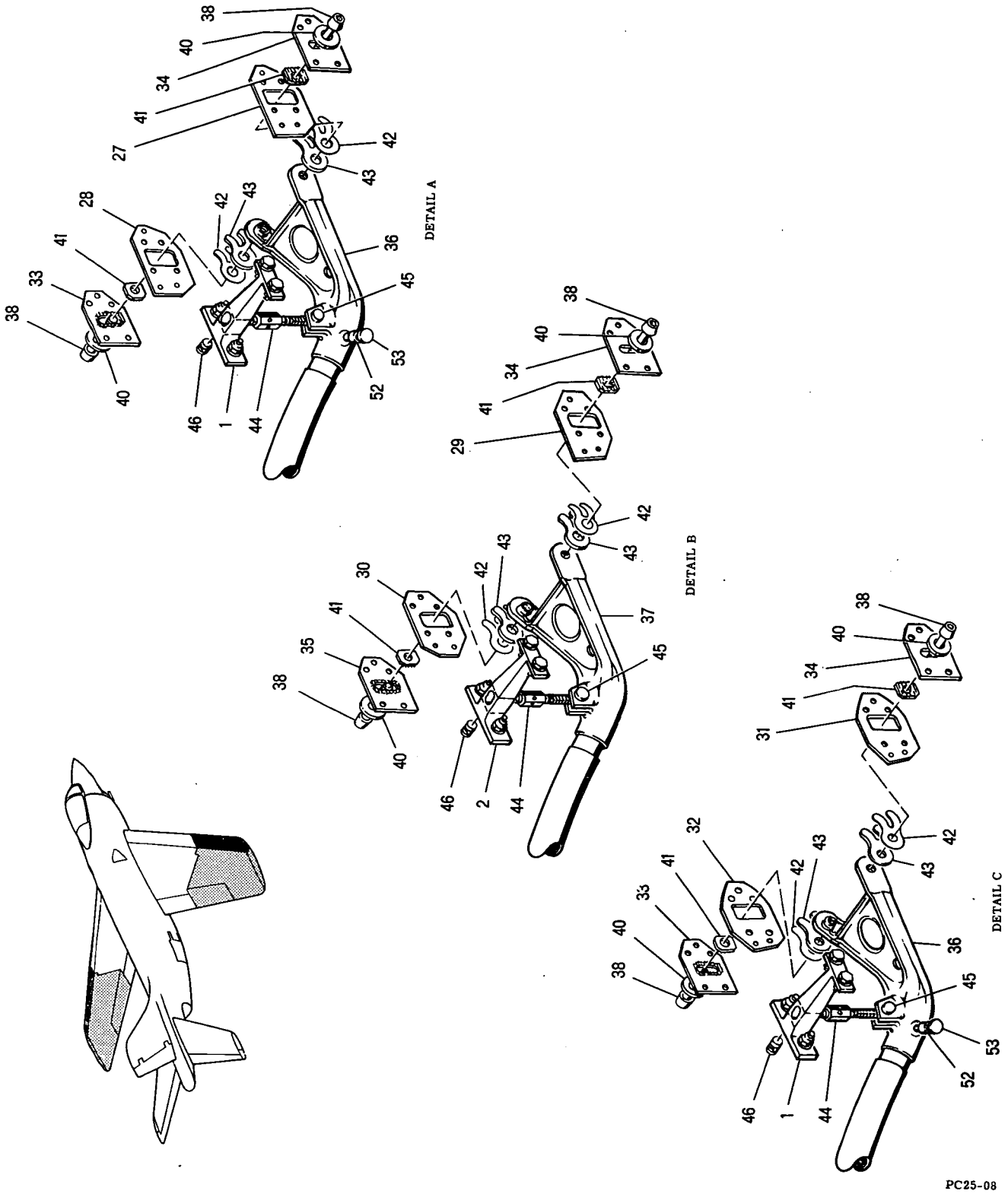

Figure 7 -- Outer Wing Leading Edge Slat Assembly (Sheet 2 of 2)

FIGURE & INDEX NUMBER	PART NUMBER	1 2 3 4 5 6 7 DESCRIPTION	UNITS PER ASS'Y	USABLE ON CODE
7 -	25-19500-301	SLAT ASSEMBLY, OUTER WING LEADING EDGE LH, SEE FIG. 2-2 FOR NEXT HIGHER ASSEMBLY	REF	
	25-19500-302	SLAT ASSEMBLY, OUTER WING LEADING EDGE RH, SEE FIG. 2-2 FOR NEXT HIGHER ASSEMBLY	REF	
	25-19501-301	. SLAT ASSEMBLY, OUTER WING LE STRUCTURAL LH	1	
	25-19501-302	. SLAT ASSEMBLY, OUTER WING LE STRUCTURAL RH	1	
- 1	25-19507- 1	. . FITTING ASSY, SLAT TRACK AFT ATTACHMENT LH, INBD & OUTBD	2	
	25-19507- 2	. . FITTING ASSY, SLAT TRACK AFT ATTACHMENT RH, INBD & OUTBD	2	
- 2	25-19507- 5	. . FITTING ASSY, SLAT TRACK AFT ATTACHMENT LH, CENTER	1	
	25-19507- 6	. . FITTING ASSY, SLAT TRACK AFT ATTACHMENT RH, CENTER	1	
- 3	25-19501-171	. . HINGE, HALF LH, ALTERED FROM GOVERNMENT STANDARD PART NO. MS20001PH6-594	1	
	25-19501-172	. . HINGE, HALF RH, ALTERED FROM GOVERNMENT STANDARD PART NO. MS20001PH6-594	1	
- 4	AN253-2-582	. . PIN, HINGE	1	
- 5	25-19501-163	. . TAB ASSY, INBD LH	1	
	25-19501-164	. . TAB ASSY, INBD RH	1	
	25-19501-173	. . . HINGE, HALF LH, ALTERED FROM GOVERNMENT STANDARD PART NO. MS20001PH6-594	1	
	25-19501-174	. . . HINGE, HALF RH, ALTERED FROM GOVERNMENT STANDARD PART NO. MS20001PH6-594	1	
- 6	25-19525- 5	. . CLIP, SLAT TRACK CLOSURE TAB LOWER LH	3	
	25-19525- 6	. . CLIP, SLAT TRACK CLOSURE TAB LOWER RH	3	
		ATTACHING PARTS		
- 7	AN509-10R11	. . SCREW	6	
	AN960D10	. . WASHER	12	
	AN365-1032	. . NUT	6	
		¤----¤-¤-¤----¤		
- 8	25-19527- 5	. . SHIM, SLAT TRACK CLOSURE TAB	3	
- 9	25-19524- 7	. . LINK, SLAT TRACK CLOSURE INBD TAB SUPPORT	1	
		ATTACHING PARTS		
	AN3-6A	. . BOLT	2	
	AN960D10L	. . WASHER	2	
	AN960D10	. . WASHER	4	
	AN365-1032	. . NUT	2	
		¤----¤-¤-¤----¤		
	25-19524- 5	. . LINK, SLAT TRACK CLOSURE CENTER TAB SUPPORT	1	
		ATTACHING PARTS		
	AN3-6A	. . BOLT	2	
	AN960D10L	. . WASHER	2	
	AN960D10	. . WASHER	4	
	AN365-1032	. . NUT	2	
		¤----¤-¤-¤----¤		
	25-19524- 3	. . LINK, SLAT TRACK CLOSURE OUTBD TAB SUPPORT	1	
		ATTACHING PARTS		
	AN3-6A	. . BOLT	2	
	AN960D10L	. . WASHER	2	
	AN960D10	. . WASHER	4	
	AN365-1032	. . NUT	2	
		¤----¤-¤-¤----¤		
- 10	25-19501- 29	. . HINGE, HALF LH, ALTERED FROM GOVERNMENT STANDARD PART NO. MS20001PY6-503	1	
	25-19501- 30	. . HINGE, HALF RH, ALTERED FROM GOVERNMENT STANDARD PART NO. MS20001PY6-503	1	
	AN253-2-488	. . PIN, HINGE	1	
- 11	25-19501-133	. . TAB ASSEMBLY, CENTER LH	1	
	25-19501-134	. . TAB ASSEMBLY, CENTER RH	1	
	25-19501- 31	. . . HINGE, HALF LH, ALTERED FROM GOVERNMENT STANDARD PART NO. MS20001PX6-503	1	
	25-19501- 32	. . . HINGE, HALF RH, ALTERED FROM GOVERNMENT STANDARD PART NO. MS20001PX6-503	1	
- 12	25-19501-167	. . HINGE, HALF LH, ALTERED FROM GOVERNMENT STANDARD PART NO. MS20001PX6-620	1	
	25-19501-168	. . HINGE, HALF RH, ALTERED FROM GOVERNMENT STANDARD PART NO. MS20001PX6-620	1	
	AN253-2-608	. . PIN, HINGE	1	
- 13	25-19501-165	. . TAB ASSY, OUTBD LH	1	
	25-19501-166	. . TAB ASSY, OUTBD RH	1	
	25-19501-169	. . . HINGE, HALF LH, ALTERED FROM GOVERNMENT STANDARD PART NO. MS20001PY6-620	1	
	25-19501-170	. . . HINGE, HALF RH, ALTERED FROM GOVERNMENT STANDARD PART NO. MS20001PY6-620	1	

FIGURE & INDEX NUMBER	PART NUMBER	1 2 3 4 5 6 7 DESCRIPTION	UNITS PER ASS'Y	USABLE ON CODE
7 - 14	25-15091- 1	• • COVER ASSY, WING TIP POSITION LIGHT LH	1	
	25-15091- 2	• • COVER ASSY, WING TIP POSITION LIGHT RH	1	
		ATTACHING PARTS		
- 15	AN509-10R11	• • SCREW	7	
		¤----¤-¤-¤----¤		
- 16	25-15091- 3	• • • COVER	1	
- 17	25-15091- 7	• • • RETAINER LH	1	
	25-15091- 8	• • • RETAINER RH	1	
- 18	25-19520-301	• • TIP ASSEMBLY, OUTER WING SLAT LH	1	
	25-19520-302	• • TIP ASSEMBLY, OUTER WING SLAT RH	1	
		ATTACHING PARTS		
- 19	AN509-10R11	• • SCREW	9	
- 20	AN509-10R9	• • SCREW	1	
	22-1650-02	• • NUT (EN)	1	
- 21	AN509-10R6	• • SCREW	1	
	22-1650-02	• • NUT (EN)	1	
		¤----¤-¤-¤----¤		
- 22	25-19501- 7	• • DOOR ASSY, INBD LH	1	
	25-19501- 8	• • DOOR ASSY, INBD RH	1	
		ATTACHING PARTS		
	AN509-10R11	• • SCREW	47	
		¤----¤-¤-¤----¤		
- 23	25-19526- 3	• • • CLIP, SLAT TRACK CLOSURE TAB, UPPER	1	
		ATTACHING PARTS		
	AN509-10R10	• • • SCREW	2	
	AN960D10	• • • WASHER	2	
	AN365-1032	• • • NUT	2	
		¤----¤-¤-¤----¤		
- 24	25-19501- 9	• • DOOR ASSEMBLY, CENTER LH	1	
	25-19501- 10	• • DOOR ASSEMBLY, CENTER RH	1	
		ATTACHING PARTS		
	AN509-10R11	• • SCREW	45	
		¤----¤-¤-¤----¤		
	25-19526- 3	• • • CLIP, SLAT TRACK CLOSURE TAB, UPPER	1	
		ATTACHING PARTS		
	AN509-10R10	• • • SCREW	2	
	AN960D10	• • • WASHER	2	
	AN365-1032	• • • NUT	2	
		¤----¤-¤-¤----¤		
- 25	25-19501- 11	• • DOOR ASSEMBLY OUTBOARD LH	1	
	25-19501- 12	• • DOOR ASSEMBLY OUTBOARD RH	1	
		ATTACHING PARTS		
	AN509-10R11	• • SCREW	45	
		¤----¤-¤-¤----¤		
	25-19526- 3	• • • CLIP, SLAT TRACK CLOSURE TAB, UPPER	1	
		ATTACHING PARTS		
	AN509-10R10	• • • SCREW	2	
	AN960D10	• • • WASHER	2	
	AN365-1032	• • • NUT	2	
		¤----¤-¤-¤----¤		
- 26	25-19515- 3	• • TRAILING EDGE, SLAT LH	1	
	25-19515- 4	• • TRAILING EDGE, SLAT RH	1	
	25-74053- 1	• • CONDUIT INSTALLATION, OUTER WING SLAT LH	1	
	25-74053- 2	• • CONDUIT INSTALLATION, OUTER WING SLAT RH	1	
	25-74053- 3	• • • CONDUIT	1	
	25-76102- 9	• • • LINER, POLYETHYLENE CONDUIT	2	
- 27	25-19541- 3	• • DOUBLER, OUTER WING SLAT TRACK INBOARD LH	1	
	25-19541- 4	• • DOUBLER, OUTER WING SLAT TRACK INBOARD RH	1	
- 28	25-19541- 5	• • DOUBLER, OUTER WING SLAT TRACK OUTBOARD LH	1	
	25-19541- 6	• • DOUBLER, OUTER WING SLAT TRACK OUTBOARD RH	1	
- 29	25-19541- 7	• • DOUBLER, OUTER WING SLAT TRACK INBOARD LH	1	
	25-19541- 8	• • DOUBLER, OUTER WING SLAT TRACK INBOARD RH	1	
- 30	25-19541- 9	• • DOUBLER, OUTER WING SLAT TRACK OUTBOARD LH	1	
	25-19541- 10	• • DOUBLER, OUTER WING SLAT TRACK OUTBOARD RH	1	
- 31	25-19541- 11	• • DOUBLER, OUTER WING SLAT TRACK INBOARD LEFT WING, OUTBOARD RIGHT WING	1	
- 32	25-19541- 12	• • DOUBLER, OUTER WING SLAT TRACK OUTBOARD LEFT WING, INBOARD RIGHT WING	1	
- 33	25-19536- 3	• • PLATE, OUTER WING SLAT ADJUSTMENT INBD LH	2	
	25-19536- 3	• • PLATE, OUTER WING SLAT ADJUSTMENT OUTBD RH	3	
- 34	25-19536- 4	• • PLATE, OUTER WING SLAT ADJUSTMENT INBD LH	3	
	25-19536- 4	• • PLATE, OUTER WING SLAT ADJUSTMENT OUTBD RH	2	

FIGURE & INDEX NUMBER	PART NUMBER	1 2 3 4 5 6 7 DESCRIPTION	UNITS PER ASS'Y	USABLE ON CODE
7 - 35	25-19539- 3	• • PLATE, OUTER WING SLAT ADJUSTMENT LH	1	
	25-19539- 4	• • PLATE, OUTER WING SLAT ADJUSTMENT RH	1	
- 36	25-19004-301	• TRACK ASSEMBLY, SLAT LH, INBOARD & OUTBOARD	2	
	25-19004-302	• TRACK ASSEMBLY, SLAT RH, INBOARD & OUTBOARD	2	
- 37	25-19004-303	• TRACK ASSEMBLY, SLAT LH, CENTER	1	
	25-19004-304	• TRACK ASSEMBLY, SLAT RH, CENTER	1	
		ATTACHING PARTS		
- 38	NAS146-23	• BOLT	6	
		¤----¤-¤-¤----¤		
	25-19004- 27	• • TRACK ASSEMBLY, SLAT LH, CENTER	1	
	25-19004- 28	• • TRACK ASSEMBLY, SLAT RH, CENTER	1	
- 39	25-19528- 3	• • • FITTING, WIRE BUNDLE ADAPTER, CENTER TRACK	1	
- 40	25-19044- 3	• WASHER, WING SLAT SPECIAL	6	
- 41	25-19537- 3	• BUSHING, OUTER WING SLAT POSITIONING	6	
- 42	25-19540- 3	• SHIM, OUTER WING SLAT	6	
- 43	25-19540- 5	• RETAINER, OUTER WING SLAT	6	
- 44	25-19523- 3	• TURNBUCKLE, OUTER WING SLAT ADJUSTMENT, INBD	1	
	25-19523- 5	• TURNBUCKLE, OUTER WING SLAT ADJUSTMENT, CENTER	1	
	25-19523- 7	• TURNBUCKLE, OUTER WING SLAT ADJUSTMENT, OUTBD	1	
- 45	25-19014- 7	• TRUNNION, SLAT TRACK AFT, LOWER ATTACHMENT	3	
- 46	25-19014- 5	• TRUNNION, SLAT TRACK AFT, UPPER ATTACHMENT	3	
	25-74001- 1	• ELECTRICAL INSTALLATION, OUTER WING SLAT LH	1	
	25-74001- 2	• ELECTRICAL INSTALLATION, OUTER WING SLAT RH	1	
- 47	AN3057-6A	• • ADAPTER	1	
- 48	25-74051- 3	• • SPRING, SLAT LEAD-IN EXTENSION	1	
	25-79000-213	• • BUNDLE ASSEMBLY, LEFT SIDE	1	
	25-79000-211	• • BUNDLE ASSEMBLY, RIGHT SIDE	1	
- 49	AN3032-3	• • • LIGHT ASSY, WING POSITION, RED, LEFT SIDE	1	
	AN3032-4	• • • LIGHT ASSY, WING POSITION, GREEN, RIGHT SIDE	1	
- 50	AN507-440R24	• • SCREW	2	
- 51	AN515-4R24	• • SCREW	1	
- 52	25-19027- 3	• UPSTOP, LEADING EDGE SLAT	4	
		ATTACHING PARTS		
- 53	AN396-73	• PIN, FLAT HEAD	2	
	AN381-3-16	• PIN, COTTER	2	
		¤----¤-¤-¤----¤		

FIGURE & INDEX NUMBER	PART NUMBER	1 2 3 4 5 6 7 DESCRIPTION	UNITS PER ASS'Y	USABLE ON CODE
8 -	25-67303- 1	CONTROLS INSTALLATION, OUTER WING SLAT LH, SEE FIG. 2-15 FOR NEXT HIGHER ASSEMBLY	REF	
	25-67303- 2	CONTROLS INSTALLATION, OUTER WING SLAT RH, SEE FIG. 2-15 FOR NEXT HIGHER ASSEMBLY	REF	
- 1	25-67304- 4	• SCREW JACK ASSEMBLY, WING SLAT, LEFT SIDE, SEE FIG. 9	2	
	25-67304- 3	• SCREW JACK ASSEMBLY, WING SLAT, RIGHT SIDE, SEE FIG. 9	2	
		ATTACHING PARTS		
- 2	AN6-17A	• BOLT	2	
	AN960D616L	• WASHER	2	
	NAS77A6-21	• BUSHING	2	
	AN960D616	• WASHER	4	
	AN365-624	• NUT	2	
		¤----¤-¤-¤----¤		
	25-67328- 5	• SPLINE ASSEMBLY, SLAT TORQUE SHAFT	1	
- 3	AN23-18A	• • BOLT	2	
	AN960D10L	• • WASHER	2	
	AN960D10	• • WASHER	2	
	AN365-1032	• • NUT	2	
- 4	AN3-11A	• • BOLT	3	
	AN960D10	• • WASHER	3	
- 5	AN435F4-20	• • RIVET	1	
- 6	25-67357- 3	• • PIN, SLAT TORQUE SHAFT UNIVERSAL	1	
- 7	25-67356- 3	• • BUSHING, SLAT TORQUE SHAFT UNIVERSAL	2	
- 8	25-67352- 3	• • EXTERNAL SPLINE, SLAT TORQUE SHAFT UNIV	1	
- 9	25-67355- 3	• • BLOCK, SLAT TORQUE SHAFT UNIVERSAL	1	
- 10	25-67353- 3	• • UNIVERSAL, SLAT TORQUE SHAFT HALF	1	
- 11	25-67327- 3	• • SUPPORT, SLAT TORQUE SHAFT BEARING	1	
- 12	AN200KS8	• • BEARING	1	
- 13	25-67354- 3	• • BUSHING, SLAT TORQUE SHAFT	1	
- 14	25-67321- 39	• TUBE, WING SLAT TORQUE, 10.00 IN. LONG	1	
- 15	25-67325- 3	• CONNECTOR, WING SLAT TORQUE TUBE	2	
		ATTACHING PARTS		
- 16	AN23-19A	• BOLT	6	
	AN960D10	• WASHER	6	
	AN364-1032	• NUT	6	
		¤----¤-¤-¤----¤		
- 17	25-67358- 3	• EXTENSION, SLAT TORQUE SHAFT CONNECTOR	1	
		ATTACHING PARTS		
	AN23-19A	• BOLT	2	
	AN960D10	• WASHER	2	
	AN364-1032	• NUT	2	
		¤----¤-¤-¤----¤		
- 18	25-67330- 3	• JOINT, WING SLAT UNIVERSAL, ALTERED FROM UJ364 (APX)	2	
- 19	25-67332- 1	• FORK ASSY, SLAT SCREW JACK CONNECTOR, CONSISTS OF A MATCHED PAIR & MUST BE REPLACED AS A SET	2	
		ATTACHING PARTS		
- 20	4M36-03003	• WASHER (MDA)	2	
- 21	AN320-6	• NUT	2	
- 22	AN380-3-3	• PIN, COTTER	2	
		¤----¤-¤-¤----¤		
- 23	25-67318- 5	• NUT, SLAT SCREW JACK	2	
- 24	25-67334- 3	• BUSHING, SLAT SCREW JACK CONNECTOR	2	
- 25	25-67335- 3	• BUSHING, SLAT SCREW JACK CONNECTOR FLANGED	2	
- 26	25-67339- 3	• SCREW, SLAT SCREW JACK CONNECTOR	2	
- 27	25-67333- 1	• HOUSING ASSEMBLY, SLAT SCREW JACK CONNECTOR LH	2	
	25-67333- 2	• HOUSING ASSEMBLY, SLAT SCREW JACK CONNECTOR RH	2	
	BNL1L524	• • NUT, BASKET (PCO)	1	
	25-67336- 3	• • SPACER, SLAT SCREW JACK CONNECTOR	1	
- 28	25-67321- 35	• TUBE, WING SLAT TORQUE, 31.00 IN. LONG	1	
- 29	25-67331- 5	• JOINT, WING SLAT BULKHEAD UNIV, ALTERED FROM 01-0052 (AS)	1	
		ATTACHING PARTS		
- 30	AN3-4A	• BOLT	3	
	AN960D10L	• WASHER	3	
		¤----¤-¤-¤----¤		
- 31	25-67324- 3	• SLEEVE, WING SLAT TORQUE TUBE	2	
		ATTACHING PARTS		
- 32	AN23-19A	• BOLT	8	
	AN960D10	• WASHER	8	
	AN364-1032	• NUT	8	
		¤----¤-¤-¤----¤		

Outer Wing

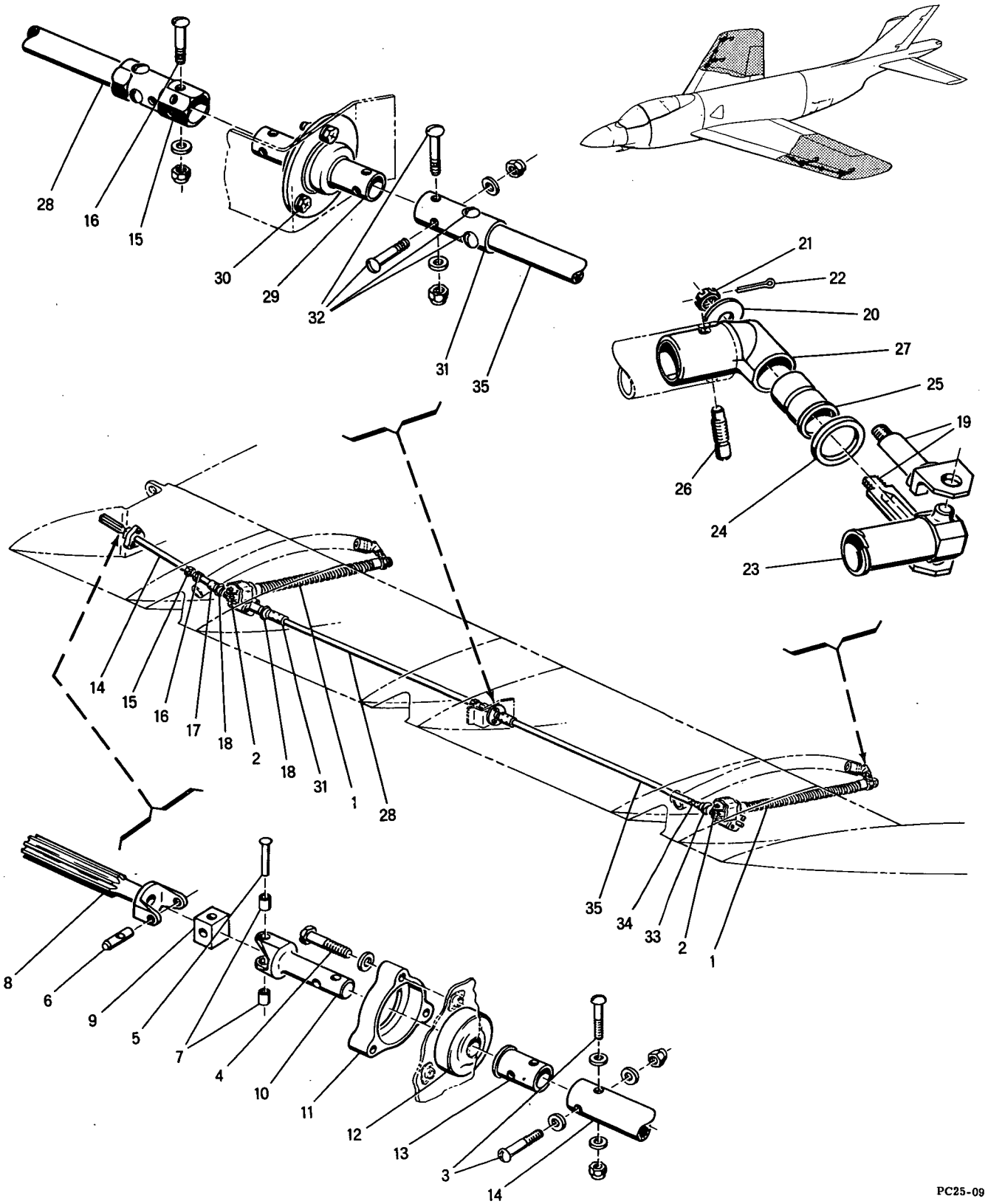

Figure 8 -- Outer Wing Slat Controls Installation

FIGURE & INDEX NUMBER	PART NUMBER	1 2 3 4 5 6 7 DESCRIPTION	UNITS PER ASS'Y	USABLE ON CODE
8 -	25-67343- 1	• TUBE ASSY, OUTER WING SLAT TORQUE	1	
- 33	25-67330- 3	• • JOINT, WING SLAT UNIVERSAL, ALTERED FROM UJ364 (APX)	1	
- 34	25-67344- 3	• • PLUG, SLAT TORQUE TUBE UNIVERSAL JOINT	1	
- 35	25-67321- 19	• • TUBE, WING SLAT TORQUE, 29.35 IN. LONG	1	

Outer Wing

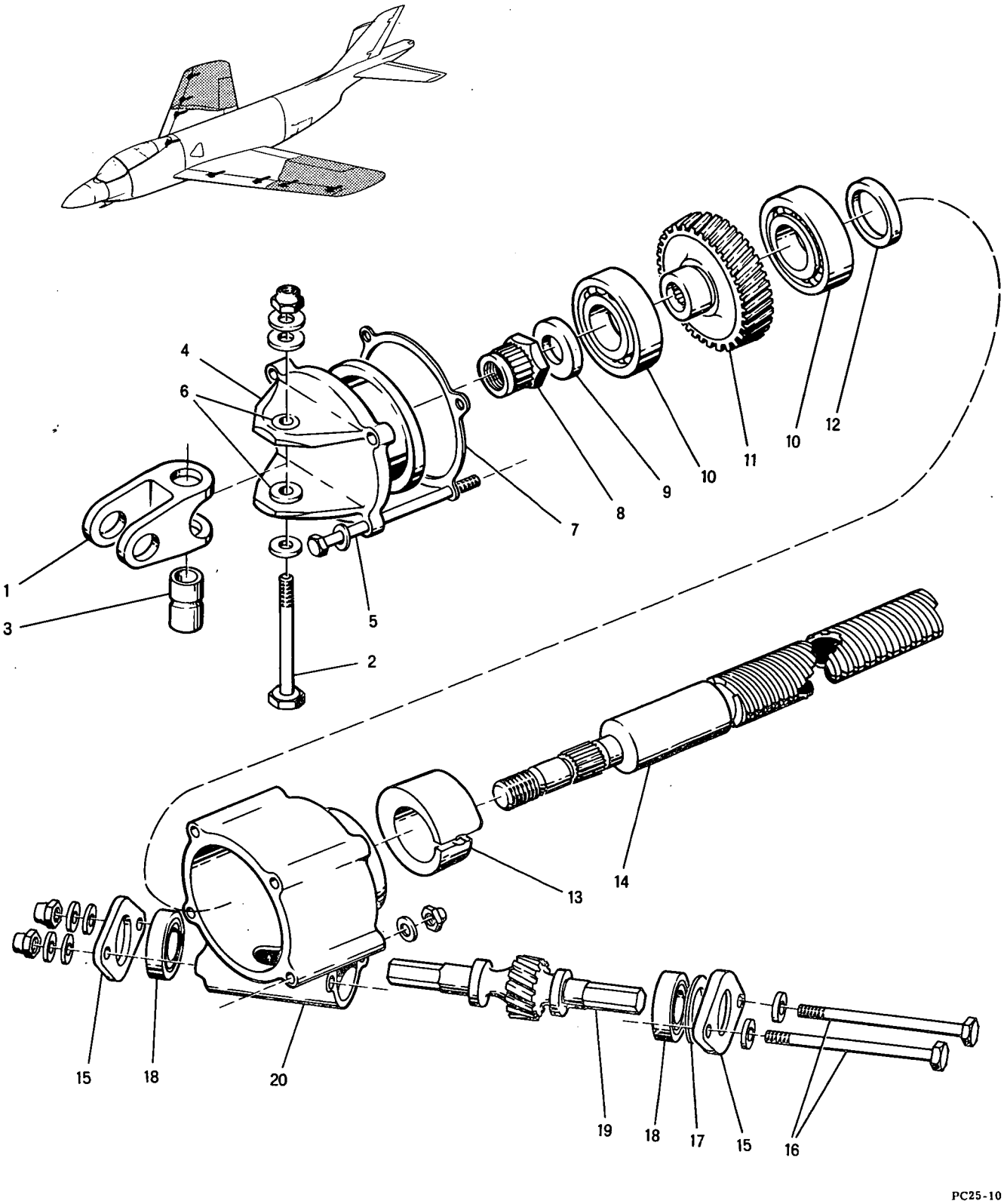

Figure 9 -- Wing Slat Screw Jack Assembly

FIGURE & INDEX NUMBER	PART NUMBER	1 2 3 4 5 6 7 DESCRIPTION	UNITS PER ASS'Y	USABLE ON CODE
9 -	25-67304- 4	SCREW JACK ASSEMBLY, WING SLAT, LEFT SIDE, SEE FIG. 8-1 & 25-7 FOR NEXT HIGHER ASSY	REF	
	25-67304- 3	SCREW JACK ASSEMBLY, WING SLAT, RIGHT SIDE, SEE FIG. 8-1 & 25-7 FOR NEXT HIGHER ASSY	REF	
- 1	25-67317- 3	• FITTING, SLAT SCREW JACK UNIVERSAL	1	
		ATTACHING PARTS		
- 2	AN4-21A	• BOLT	1	
	AN960D416	• WASHER	3	
	AN365-428	• NUT	1	
		¤----¤-¤-¤----¤		
- 3	NAS72-4-102	• BUSHING	1	
- 4	25-67314- 5	• PLATE ASSEMBLY, SLAT SCREW JACK SUPPORT	1	
		ATTACHING PARTS		
- 5	AN3-22A	• BOLT	4	
	AN960D10	• WASHER	8	
	AN365-1032	• NUT	4	
		¤----¤-¤-¤----¤		
- 6	4M34-4-14	• • BUSHING (MDA)	2	
- 7	25-67338- 3	• SHIM, SLAT SCREW JACK	1	
- 8	EB080	• NUT (EN)	1	
- 9	25-67365- 3	• WASHER, SLAT JACK GEAR BOX	1	
- 10	AN201KP12A	• BEARING	2	
- 11	25-67312- 4	• GEAR, SLAT SCREW JACK RH	1	
	25-67312- 3	• GEAR, SLAT SCREW JACK LH	1	
- 12	25-67316- 3	• SPACER RING, WING SLAT ACTUATOR	1	
- 13	25-67315- 3	• RING, SLAT SCREW JACK SPLIT FRICTION	1	
- 14	25-67308- 1	• SHAFT ASSEMBLY, SLAT SCREW JACK	1	
- 15	25-67313- 5	• PLATE, PINION BEARING RETAINER	2	
		ATTACHING PARTS		
- 16	AN3-31A	• BOLT	2	
	AN960-10L	• WASHER	2	
	AN960-10	• WASHER	4	
	AN365-1032	• NUT	2	
		¤----¤-¤-¤----¤		
- 17	25-67366- 3	• SHIM, SLAT SCREW JACK PINION	1	
- 18	AN201KP8A	• BEARING	2	
- 19	25-67309- 6	• PINION, SLAT SCREW JACK RH	1	
	25-67309- 5	• PINION, SLAT SCREW JACK LH	1	
- 20	25-67307- 6	• HOUSING, SLAT SCREW JACK RH	1	
	25-67307- 5	• HOUSING, SLAT SCREW JACK LH	1	

Outer Wing

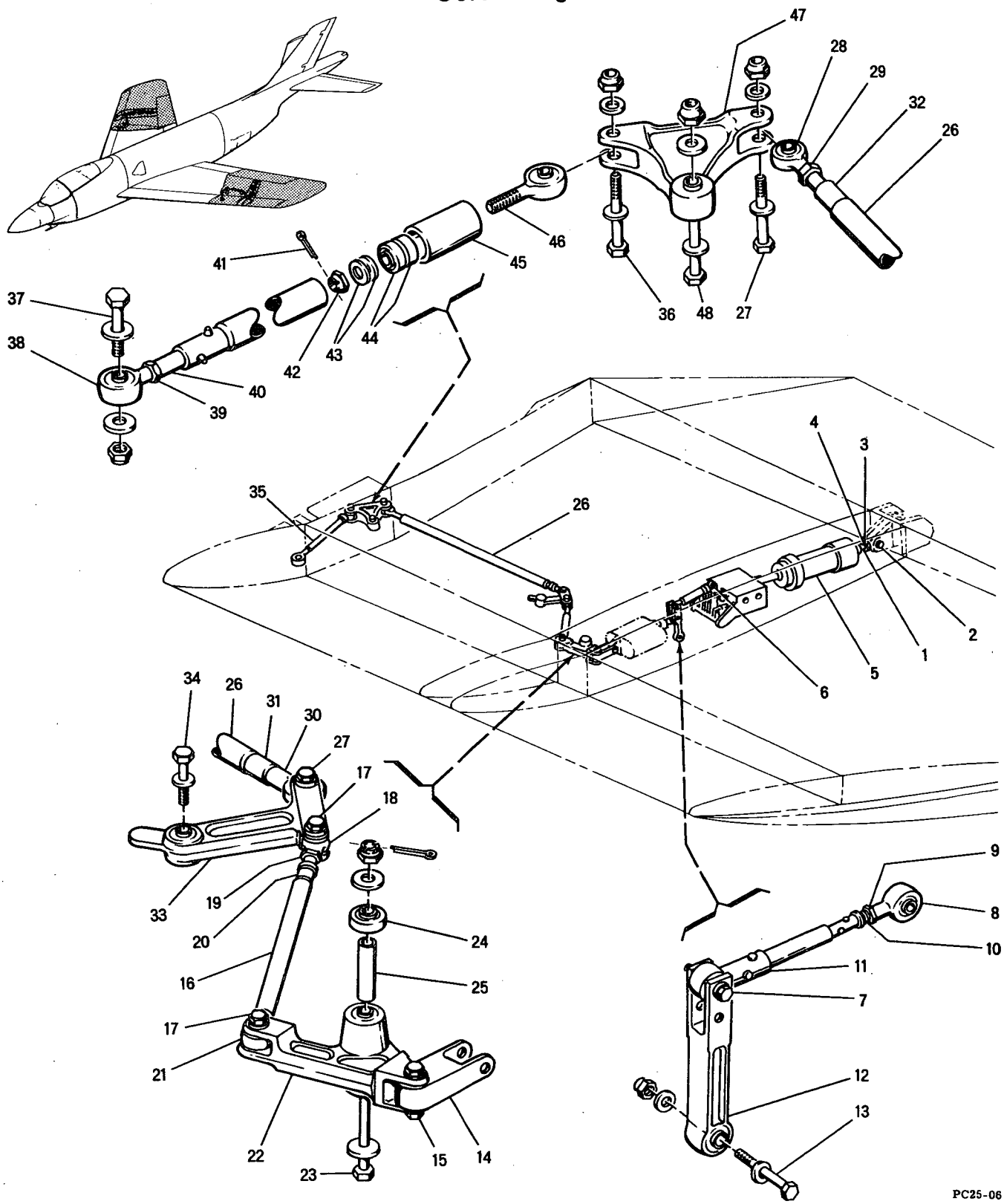

Figure 10 -- Outer Wing Surface Controls Installation

FIGURE & INDEX NUMBER	PART NUMBER	1 2 3 4 5 6 7 DESCRIPTION	UNITS PER ASS'Y	USABLE ON CODE
10 -	25-61400- 1	CONTROLS INSTALLATION, OUTER WING SURFACE LH, SEE FIG. 2-16 FOR NEXT HIGHER ASSEMBLY	REF	
	25-61400- 2	CONTROLS INSTALLATION, OUTER WING SURFACE RH, SEE FIG. 2-16 FOR NEXT HIGHER ASSEMBLY	REF	
- 1	25-61451- 1	. ROD END ASSEMBLY, AILERON POWER CYLINDER	1	
		ATTACHING PARTS		
- 2	NAS464P16A34	. BOLT	1	
	AN960D1616L	. WASHER	1	
	AN960D1616	. WASHER	1	
	4M36-10008	. WASHER (MDA)	AR	
	4M36-10007	. WASHER (MDA)	1	
	AN364-1614	. NUT	1	
		¤----¤-¤-¤----¤		
	BLN16003G-C	. . BEARING (SWPC)	1	
	NAS516-1	. . FITTING, LUB	2	
- 3	25-61453- 3	. NUT, AILERON POWER CYLINDER JAM	1	
- 4	25-61452- 3	. WASHER, AILERON POWER CYLINDER ROD END LOCKING	1	
- 5	12680	. CYLINDER, POWER CONTROL (WAH) MCDONNELL SPEC 25-69037-5	1	
		ATTACHING PARTS		
- 6	NAS464-4A17	. BOLT	1	
	AN960D416	. WASHER	2	
	AN364-428	. NUT	1	
		¤----¤-¤-¤----¤		
	25-61037- 67	. ROD ASSEMBLY, CONTROL	1	
		ATTACHING PARTS		
- 7	NAS464-4A16	. BOLT	1	
	AN960D416L	. WASHER	1	
	AN960D416	. WASHER	1	
	AN364-428	. NUT	1	
		¤----¤-¤-¤----¤		
- 8	RE4F5	. . BEARING, ROD END (FAF)	1	
- 9	AN316-5R	. . NUT	1	
	25-61037-167	. . ROD ASSEMBLY	1	
- 10	AN490HT15P	. . . ROD END, THREADED	1	
- 11	19-61075- 5	. . . BEARING, RUDDER AUTO PILOT PUSH-PULL, ALTERED FROM RE4H6 (FAF)	1	
- 12	25-61253- 3	. IDLER ASSEMBLY, AILERON CONTROL	1	
		ATTACHING PARTS		
- 13	NAS464-4A17	. BOLT	1	
	AN960D416	. WASHER	2	
	AN364-428	. NUT	1	
		¤----¤-¤-¤----¤		
	DW4	. . BEARING (FAF)	1	
- 14	25-61402- 1	. UNIVERSAL ASSEMBLY, AILERON CONTROL	1	
		ATTACHING PARTS		
- 15	NAS464-4A19	. BOLT	1	
	AN960D416L	. WASHER	1	
	AN960D416	. WASHER	1	
	AN364-428	. NUT	1	
		¤----¤-¤-¤----¤		
	DW4	. . BEARING (FAF)	1	
- 16	25-61037- 81	. ROD ASSEMBLY, CONTROL	1	
		ATTACHING PARTS		
- 17	NAS464-4A14	. BOLT	2	
	AN960D416L	. WASHER	2	
	AN960D416	. WASHER	2	
	AN364-428	. NUT	2	
		¤----¤-¤-¤----¤		
- 18	RE4F5	. . BEARING, ROD END (FAF)	1	
- 19	AN316-5R	. . NUT	1	
	25-61037-181	. . ROD ASSEMBLY	1	
- 20	AN490HT15P	. . . ROD END, THREADED	1	
- 21	19-61075- 5	. . . BEARING, RUDDER AUTO PILOT PUSH-PULL, ALTERED FROM RE4H6 (FAF)	1	
- 22	25-61415- 1	. BELL CRANK ASSEMBLY, AILERON CONTROL LH	1	
	25-61415- 2	. BELL CRANK ASSEMBLY, AILERON CONTROL RH	1	
		ATTACHING PARTS		
- 23	NAS464-4-47	. BOLT	1	
	AN960D416	. WASHER	2	
	AN320-4	. NUT	1	
	AN380-2-4	. PIN, COTTER	1	
		¤----¤-¤-¤----¤		

FIGURE & INDEX NUMBER	PART NUMBER	1 2 3 4 5 6 7 DESCRIPTION	UNITS PER ASS'Y	USABLE ON CODE
10 - 24	AN201KP4A	• • BEARING	2	
- 25	NAS43DD4-130	• • SPACER	1	
- 26	25-61037- 79	• ROD ASSEMBLY, CONTROL	1	
		ATTACHING PARTS		
- 27	NAS464-4A14	• BOLT	2	
	AN960D416L	• WASHER	2	
	AN960D416	• WASHER	2	
	AN364-428	• NUT	2	
		¤----¤-¤-¤----¤		
- 28	RE4M6	• • BEARING, ROD END (FAF)	1	
- 29	AN316-6R	• • NUT	1	
	25-61037-179	• • ROD ASSEMBLY	1	
- 30	RE4H6	• • • BEARING, ROD END (FAF)	1	
- 31	25-61070- 3	• • • ADAPTER, ROD END	1	
- 32	25-61073- 3	• • • ADAPTER, ADJUSTABLE ROD END	1	
- 33	25-61416- 1	• BELL CRANK ASSEMBLY, AILERON CONTROL	1	
		ATTACHING PARTS		
- 34	AN174-14A	• BOLT	1	
	AN960D416	• WASHER	1	
		¤----¤-¤-¤----¤		
	DW4	• • BEARING (FAF)	1	
- 35	25-61403- 1	• ROD ASSEMBLY, AILERON CONTROL	1	
		ATTACHING PARTS		
- 36	NAS464-4A16	• BOLT	1	
	AN960D416L	• WASHER	1	
	AN960D416	• WASHER	1	
	AN364-428	• NUT	1	
- 37	NAS464-4A14	• BOLT, SEE FIG. 26-10	REF	
	AN960D416L	• WASHER	REF	
	AN960D416	• WASHER	REF	
	AN364-428	• NUT	REF	
		¤----¤-¤-¤----¤		
- 38	25-61266- 3	• • BEARING, SPECIAL ROD END, ALTERED FROM RE4M6 (FAF)	1	
- 39	AN316-6R	• • NUT	1	
- 40	25-61066- 3	• • ADAPTER, ADJUSTABLE ROD END	1	
- 41	AN380-2-3	• • PIN, COTTER	1	
- 42	AN310-4	• • NUT	1	
- 43	AN960-416	• • WASHER	2	
- 44	AN201KP6A	• • BEARING	2	
- 45	25-61405- 3	• • COLLAR, WING FOLD ROD	1	
- 46	25-61404- 1	• • ROD END ASSEMBLY, WING FOLD	1	
	AN206DSP4	• • • BEARING	1	
- 47	25-61407- 1	• BELL CRANK ASSEMBLY, AILERON CONTROL	1	
		ATTACHING PARTS		
- 48	NAS464-4A20	• BOLT	1	
	AN960D416L	• WASHER	1	
	AN960D416	• WASHER	1	
	AN364-428	• NUT	1	
		¤----¤-¤-¤----¤		
	DW4	• • BEARING (FAF)	1	

FIGURE & INDEX NUMBER	PART NUMBER	1 2 3 4 5 6 7 DESCRIPTION	UNITS PER ASS'Y	USABLE ON CODE
11 -	25-69007- 1	HYDRAULIC INSTL, OUTER WING LH, SEE FIG. 2-17 FOR NEXT HIGHER ASSY	REF	A
	25-69007-301	HYDRAULIC INSTL, OUTER WING LH, SEE FIG. 2-17 FOR NEXT HIGHER ASSY	REF	B-F
	25-69007- 2	HYDRAULIC INSTL, OUTER WING RH, SEE FIG. 2-17 FOR NEXT HIGHER ASSY	REF	A
	25-69007-302	HYDRAULIC INSTL, OUTER WING RH, SEE FIG. 2-17 FOR NEXT HIGHER ASSY	REF	B-F
- 1	25-69165- 1	• ACTUATOR ASSEMBLY, WING FOLD, SEE FIG. 12	1	
		ATTACHING PARTS		
- 2	NAS464-8A32	• BOLT	1	
	AN960-816L	• WASHER	1	
	AN960-816	• WASHER	2	
	4M36-04005	• WASHER (MDA)	4	
	AN364-820	• NUT	1	
- 3	NAS464-8A34	• BOLT	1	
	AN960-816	• WASHER	2	
	4M36-04005	• WASHER (MDA)	4	
	AN364-820	• NUT	1	
		¤----¤-¤-¤----¤		
- 4	AN320-8	• NUT	4	
- 5	AN960-1016	• WASHER	8	
- 6	AN931-8-13	• GROMMET	4	
- 7	25-69338-301	• SWIVEL ASSEMBLY, HYDRAULIC AILERON ACTUATOR	4	
- 8	AN380-3-5	• • PIN, COTTER	2	
- 9	AN320-8	• • NUT	2	
- 10	AN960-1016L	• • WASHER	7	
- 11	25-69334- 1	• • PIN ASSEMBLY, HYDRAULIC SWIVEL DUAL	1	
- 12	AN316-8R	• • NUT	1	
- 13	25-69336- 5	• • BOLT, HYD SWIVEL	1	
- 14	25-69337- 3	• • BOLT, HYD SWIVEL	1	
- 15	6144-12	• • RING, BACK UP (SHWS)	8	
- 16	AN6227B12	• • PACKING, O RING	8	
- 17	25-69083- 1	• • LINK ASSEMBLY, HYDRAULIC SWIVEL	2	
- 18	AN6290-8	• GASKET	4	
- 19	25-69388- 3	• TUBE ASSY, UTILITY RETURN LINE LEFT SIDE	1	
	25-69388- 5	• TUBE ASSY, UTILITY RETURN LINE RIGHT SIDE	1	
- 20	MS21907D6	• ELBOW	1	
	AN960D916	• WASHER, USE WITH INDEX 20	1	
	AN924-6D	• NUT, USE WITH INDEX 20	1	
- 21	25-69388- 7	• TUBE ASSY, UTILITY RETURN LINE LEFT SIDE	1	A
	25-69388- 67	• TUBE ASSY, UTILITY RETURN LINE LEFT SIDE	1	B-F
	25-69388- 9	• TUBE ASSY, UTILITY RETURN LINE RIGHT SIDE	1	A
	25-69388- 69	• TUBE ASSY, UTILITY RETURN LINE RIGHT SIDE	1	B-F
- 22	MS21903D6	• UNION	2	
	AN924-6D	• NUT, USE WITH INDEX 22	2	
- 23	25-69388- 11	• TUBE ASSY, UTILITY RETURN LINE LEFT SIDE	1	
	25-69388- 13	• TUBE ASSY, UTILITY RETURN LINE RIGHT SIDE	1	
- 24	25-69388- 15	• TUBE ASSY, UTILITY RETURN LINE LEFT SIDE	1	
	25-69388- 17	• TUBE ASSY, UTILITY RETURN LINE RIGHT SIDE	1	
- 25	MS21915D8-6	• BUSHING	1	
	AN6290-8	• GASKET, USE WITH INDEX 25	1	
- 26	25-69388- 47	• TUBE ASSY, UTILITY PRESSURE LINE LEFT SIDE	1	
	25-69388- 49	• TUBE ASSY, UTILITY PRESSURE LINE RIGHT SIDE	1	
- 27	MS21902D8	• UNION	3	
	AN6290-8	• GASKET, USE WITH INDEX 27	3	
- 28	MS28720-8	• FILTER, HYDRAULIC	2	
		ATTACHING PARTS		
	AN4-26A	• BOLT	4	
	AN960D416	• WASHER	4	
		¤----¤-¤-¤----¤		
- 29	25-69388- 43	• TUBE ASSY, UTILITY PRESSURE LINE LEFT SIDE	1	
	25-69388- 45	• TUBE ASSY, UTILITY PRESSURE LINE RIGHT SIDE	1	
- 30	MS21907D8	• ELBOW	2	
	AN960D1216	• WASHER, USE WITH INDEX 30	1	
	AN924-8D	• NUT, USE WITH INDEX 30	2	
- 31	25-69388- 39	• TUBE ASSY, UTILITY PRESSURE LINE LEFT SIDE	1	
	25-69388- 41	• TUBE ASSY, UTILITY PRESSURE LINE RIGHT SIDE	1	
- 32	MS21903D8	• UNION	1	
	AN924-8	• NUT, USE WITH INDEX 32	1	
- 33	25-69388- 35	• TUBE ASSY, UTILITY PRESSURE LINE LEFT SIDE	1	A
	25-69388- 71	• TUBE ASSY, UTILITY PRESSURE LINE LEFT SIDE	1	B-F
	25-69388- 37	• TUBE ASSY, UTILITY PRESSURE LINE RIGHT SIDE	1	A
	25-69388- 73	• TUBE ASSY, UTILITY PRESSURE LINE RIGHT SIDE	1	B-F
- 34	25-69388- 31	• TUBE ASSY, UTILITY PRESSURE LINE LEFT SIDE	1	
	25-69388- 33	• TUBE ASSY, UTILITY PRESSURE LINE RIGHT SIDE	1	
- 35	MS21916D8-6	• REDUCER	2	

Outer Wing

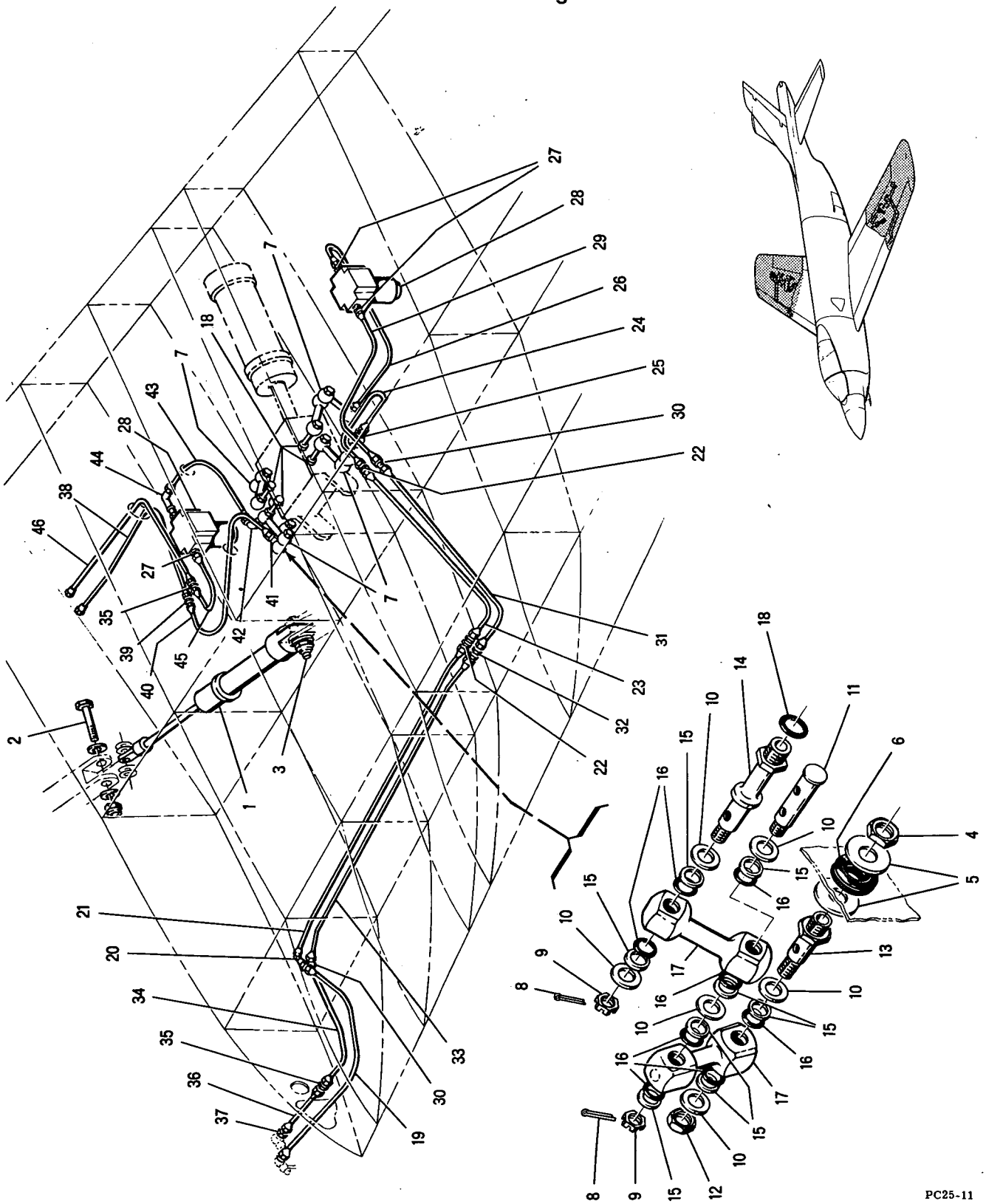

Figure 11 - Outer Wing Hydraulic Installation

FIGURE & INDEX NUMBER	PART NUMBER	1 2 3 4 5 6 7 DESCRIPTION	UNITS PER ASS'Y	USABLE ON CODE
11 - 36	25-69388- 27	• TUBE ASSY, UTILITY PRESSURE LINE LEFT SIDE	1	
	25-69388- 29	• TUBE ASSY, UTILITY PRESSURE LINE RIGHT SIDE	1	
- 37	AN924-6D	• NUT	1	
- 38	25-69388- 23	• TUBE ASSY, POWER CONTROL RETURN LINE LEFT SIDE	1	
	25-69388- 25	• TUBE ASSY, POWER CONTROL RETURN LINE RIGHT SIDE	1	
- 39	MS21902D6	• UNION	1	
- 40	25-69388- 63	• TUBE ASSY, POWER CONTROL RETURN LINE LEFT SIDE	1	
	25-69388- 65	• TUBE ASSY, POWER CONTROL RETURN LINE RIGHT SIDE	1	
- 41	AN939D8	• ELBOW	1	
	AN6290-8	• GASKET, USE WITH INDEX 41	2	
	MS21916D8-6	• REDUCER, USE WITH INDEX 41	1	
- 42	AN939D8	• ELBOW	1	
	MS21902D8	• UNION, USE WITH INDEX 42	1	
	AN6290-8	• GASKET, USE WITH INDEX 42	2	
- 43	25-69388- 51	• TUBE ASSY, POWER CONTROL PRESS. LINE LEFT SIDE	1	
	25-69388- 53	• TUBE ASSY, POWER CONTROL PRESS. LINE RIGHT SIDE	1	
- 44	MS21908D8	• ELBOW	1	
	AN6289D8	• NUT, USE WITH INDEX 44	1	
	AN6290-8	• GASKET, USE WITH INDEX 44	1	
	AN6291-8	• RING, BACK UP, USE WITH INDEX 44	1	
- 45	25-69388- 55	• TUBE ASSY, POWER CONTROL PRESS. LINE LEFT SIDE	1	
	25-69388- 57	• TUBE ASSY, POWER CONTROL PRESS. LINE RIGHT SIDE	1	
- 46	25-69388- 59	• TUBE ASSY, POWER CONTROL PRESS. LINE LEFT SIDE	1	
	25-69388- 61	• TUBE ASSY, POWER CONTROL PRESS. LINE RIGHT SIDE	1	

Outer Wing

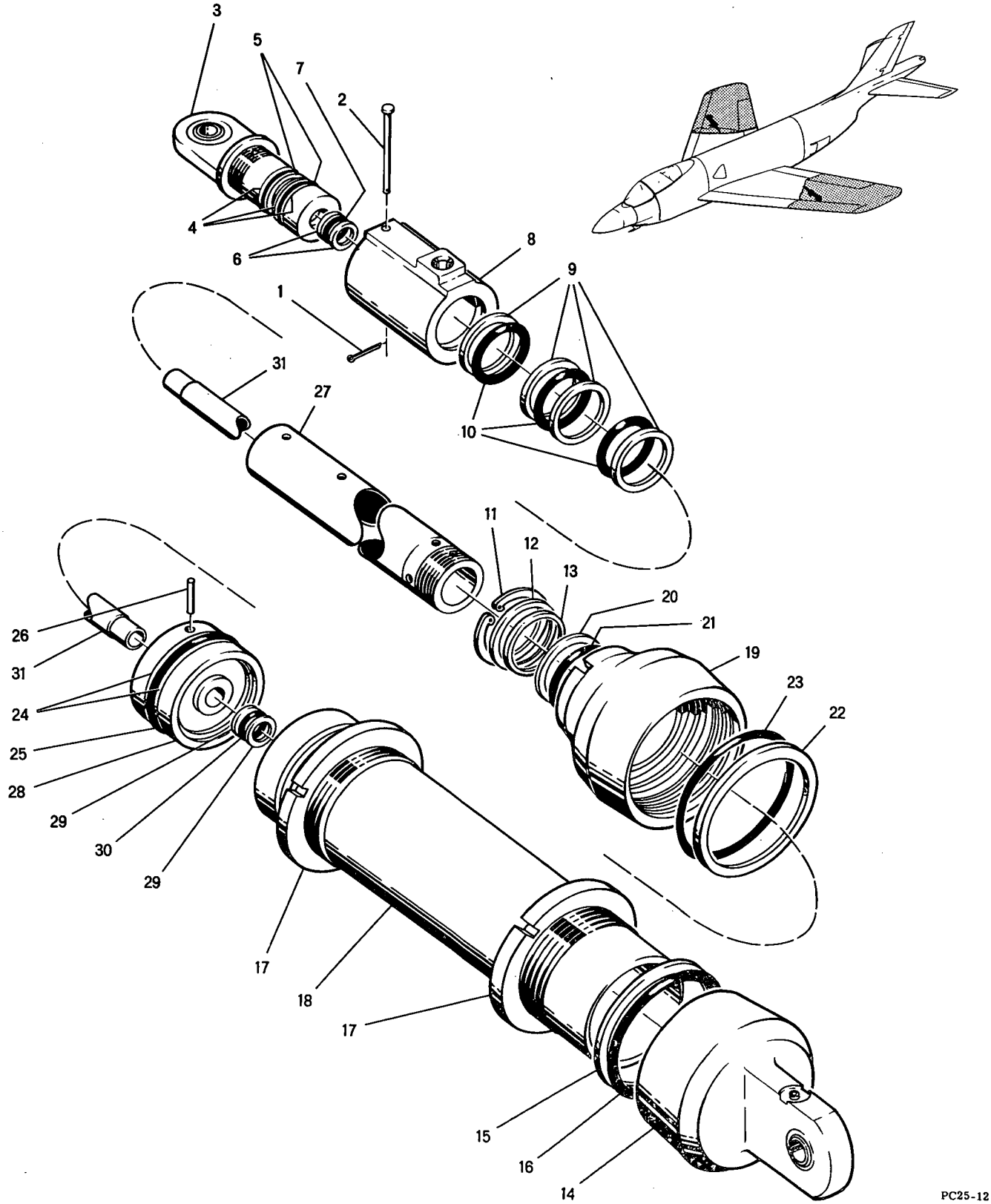

Figure 12 - Wing Fold Actuator Assembly

FIGURE & INDEX NUMBER	PART NUMBER	1 2 3 4 5 6 7 DESCRIPTION	UNITS PER ASS'Y	USABLE ON CODE
12 -	25-69165- 1	ACTUATOR ASSY, WING FOLD, SEE FIG. 11-1 FOR NEXT HIGHER ASSEMBLY	REF	
- 1	AN381-2-5	• PIN, COTTER	1	
- 2	AN392-61	• PIN, FLAT HEAD	1	
- 3	25-69161- 1	• ROD END ASSY, WING FOLD ACTUATOR	1	
	BSR8000G-C	• • BEARING (SWPC)	1	
	NAS497	• • FITTING, LUB	1	
- 4	AN6246-13	• RING, BACK UP	3	
- 5	AN6227B13	• PACKING, O RING	2	
- 6	AN6246-9	• RING, BACK UP	2	
- 7	AN6227B9	• PACKING, O RING	1	
- 8	25-69162- 3	• ADAPTER, WING FOLD ACTUATOR PORTING	1	
- 9	AN6246-23	• RING, BACK UP	4	
- 10	AN6227B23	• PACKING, O RING	3	
- 11	NAS50-175	• RING, INTERNAL RETAINER	1	
- 12	4M36-13005	• WASHER (MDA)	1	
- 13	AN6231A13	• SCRAPER	1	
- 14	25-69151- 1	• CAP ASSY, WING FOLD ACTUATOR ANTI ROD END	1	
	NAS497	• • FITTING, LUB	1	
	BSR8000G-C	• • BEARING (SWPC)	1	
- 15	AN6244-10	• RING, BACK UP	1	
- 16	AN6230B10	• GASKET, O RING	1	
- 17	25-69152- 3	• NUT, WING FOLD ACTUATOR LOCK	2	
- 18	25-69153- 3	• BARREL, WING FOLD ACTUATOR	1	
- 19	25-69154- 3	• CAP, WING FOLD ACTUATOR ROD END	1	
- 20	6144-23	• RING, BACK UP (SHWS)	1	
- 21	AN6227B23	• PACKING, O RING	1	
- 22	AN6244-10	• RING, BACK UP	1	
- 23	AN6230B10	• GASKET, O RING	1	
- 24	6144-32	• RING, BACK UP (SHWS)	2	
- 25	AN6227B32	• PACKING, O RING	1	
- 26	52-022-094-0625	• PIN, ROLL (EN)	1	
- 27	25-69156- 3	• ROD, WING FOLD ACTUATOR PISTON	1	
- 28	25-69155- 3	• PISTON, WING FOLD ACTUATOR	1	
- 29	AN6246-9	• RING, BACK UP	2	
- 30	AN6227B9	• PACKING, O RING	1	
- 31	25-69163- 3	• TUBE, WING FOLD ACTUATOR PORTING ADAPTER	1	

Outer Wing

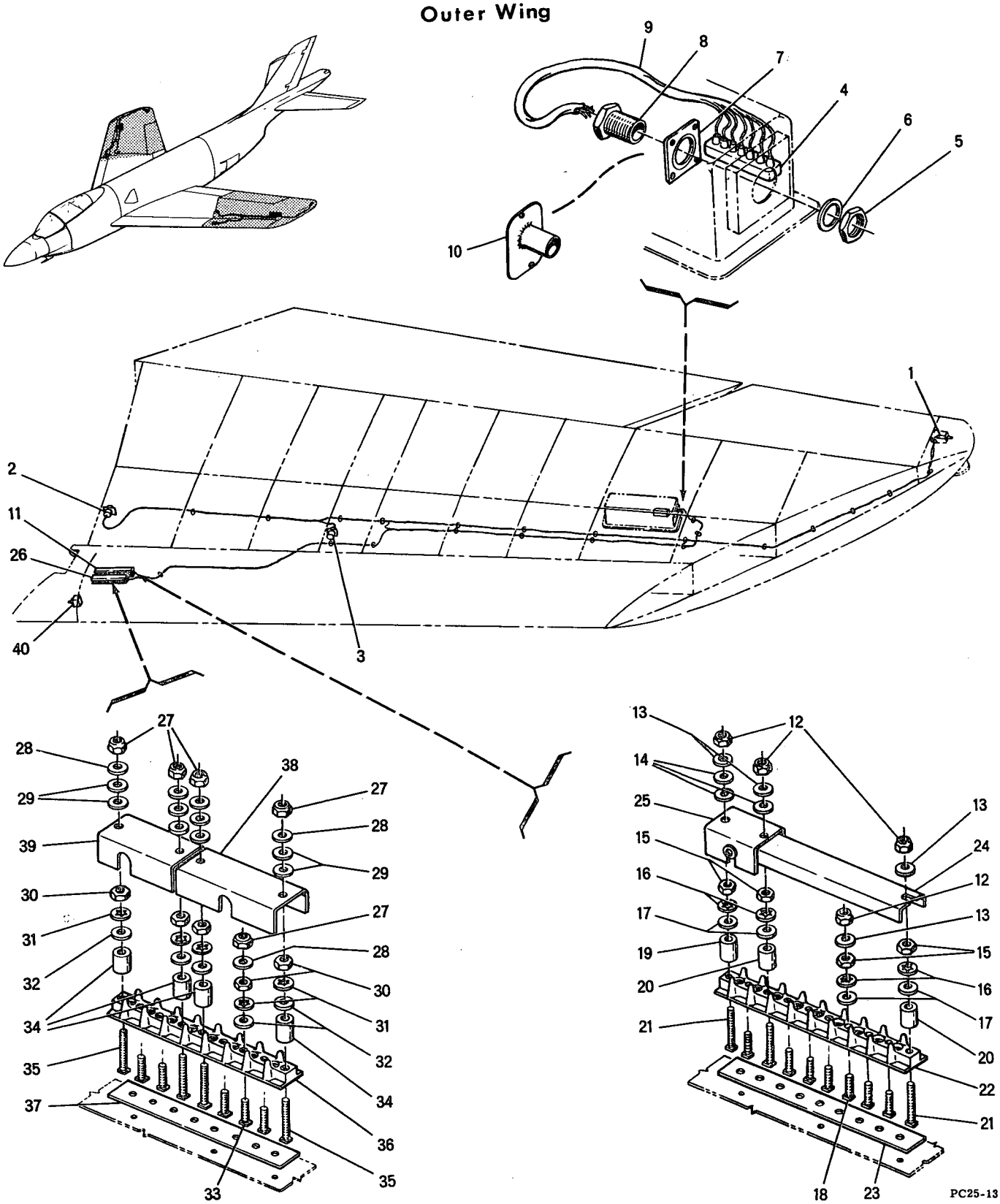

Figure 13 -- Outer Wing Wiring Installation

FIGURE & INDEX NUMBER	PART NUMBER	1 2 3 4 5 6 7 DESCRIPTION	UNITS PER ASS'Y	USABLE ON CODE
13 -	25-74000- 1	WIRING INSTL, OUTER WING LH, SEE FIG. 2-18 FOR NEXT HIGHER ASSY	REF	
	25-74000- 2	WIRING INSTL, OUTER WING RH, SEE FIG. 2-18 FOR NEXT HIGHER ASSY	REF	
	25-79000-207	• BUNDLE ASSEMBLY, WIRE, LEFT SIDE	1	
	25-79000-209	• BUNDLE ASSEMBLY, WIRE, RIGHT SIDE	1	
- 1	AN3035-2	• • LIGHT ASSEMBLY	1	
	25-79000-203	• BUNDLE ASSEMBLY, WIRE, LEFT SIDE	1	
	25-79000-165	• BUNDLE ASSEMBLY, WIRE, RIGHT SIDE	1	
- 2	AN3100M22-14P	• • RECEPTACLE	1	
	25-79000-A279	• BUNDLE ASSEMBLY, WIRE, LEFT SIDE	1	
	25-79000-A281	• BUNDLE ASSEMBLY, WIRE, RIGHT SIDE	1	
- 3	AN3100-22-14S	• • RECEPTACLE	1	
	25-79000-205	• BUNDLE ASSEMBLY, WIRE, LEFT SIDE ONLY	1	A-B
	25-79000-A205	• BUNDLE ASSEMBLY, WIRE, LEFT SIDE ONLY	1	C-F
- 4	S276-1232P2	• • RECEPTACLE (RAY) GFP, FURNISHED WITH RT160/APN22	1	
	25-74056- 1	• • FEED THRU ASSY, RT160/APN22 HOUSING	1	A-B
- 5	AN3066-8	• • • NUT	1	
- 6	4M36-07008	• • • WASHER (MDA) ALTERNATE 4M36-07003 (MDA)	1	
- 7	25-74056- 3	• • • PLATE	1	A-B
- 8	5M13-8	• • • BUSHING (MDA)	1	
- 9	S1789-1177P1	• • CABLE, SPECIAL AN/APN22 (RAY) 12 FEET LONG	1	
- 10	25-74062- 1	• • BUSHING ASSY, AN/APN22 R/T HOUSING	1	C-F
- 11	25-74054- 3	• PANEL ASSY, TERMINAL	1	
- 12	AN364-1032	• • NUT	10	
- 13	AN961-10	• • WASHER	10	
- 14	AN960D10L	• • WASHER	3	
- 15	AN345-10	• • NUT	10	
- 16	AN936A10	• • WASHER, LOCK	10	
- 17	AN960-10	• • WASHER	10	
- 18	AN3432-10-13	• • STUD, ELECTRICAL TERMINAL BLOCK	7	
- 19	NAS42DD6-39	• • SPACER	1	
- 20	NAS42DD6-36	• • SPACER	2	
- 21	AN3432-10-22	• • STUD, ELECTRICAL TERMINAL BLOCK	3	
- 22	5M14-10-10	• • PANEL, CONNECTOR (MDA)	1	
- 23	AN3437-2-11	• • STRIP, INSULATING	1	
- 24	5M8-10-6	• COVER, PANEL ASSY (MDA)	1	
- 25	25-74055- 3	• SHIELD, TERMINAL PANEL COVER	1	
- 26	25-74054- 1	• PANEL ASSY, TERMINAL	1	
- 27	AN364-1032	• • NUT	9	
- 28	AN961-10	• • WASHER	9	
- 29	AN960D10L	• • WASHER	8	
- 30	AN345-10	• • NUT	9	
- 31	AN936A10	• • WASHER	9	
- 32	AN960-10	• • WASHER	9	
- 33	AN3432-10-13	• • STUD, ELECTRICAL TERMINAL BLOCK	5	
- 34	NAS42DD6-39	• • SPACER	4	
- 35	AN3432-10-22	• • STUD, ELECTRICAL TERMINAL BLOCK	4	
- 36	5M14-10-9	• • PANEL, CONNECTOR (MDA)	1	
- 37	AN3437-2-10	• • STRIP, INSULATING	1	
- 38	25-74055- 7	• SHIELD, TERMINAL PANEL COVER	1	
- 39	25-74055- 5	• SHIELD, TERMINAL PANEL COVER	1	
- 40	AN3021-8	• SWITCH, ARMAMENT SAFETY DISABLING, LEFT SIDE ONLY	1	

Inner Wing

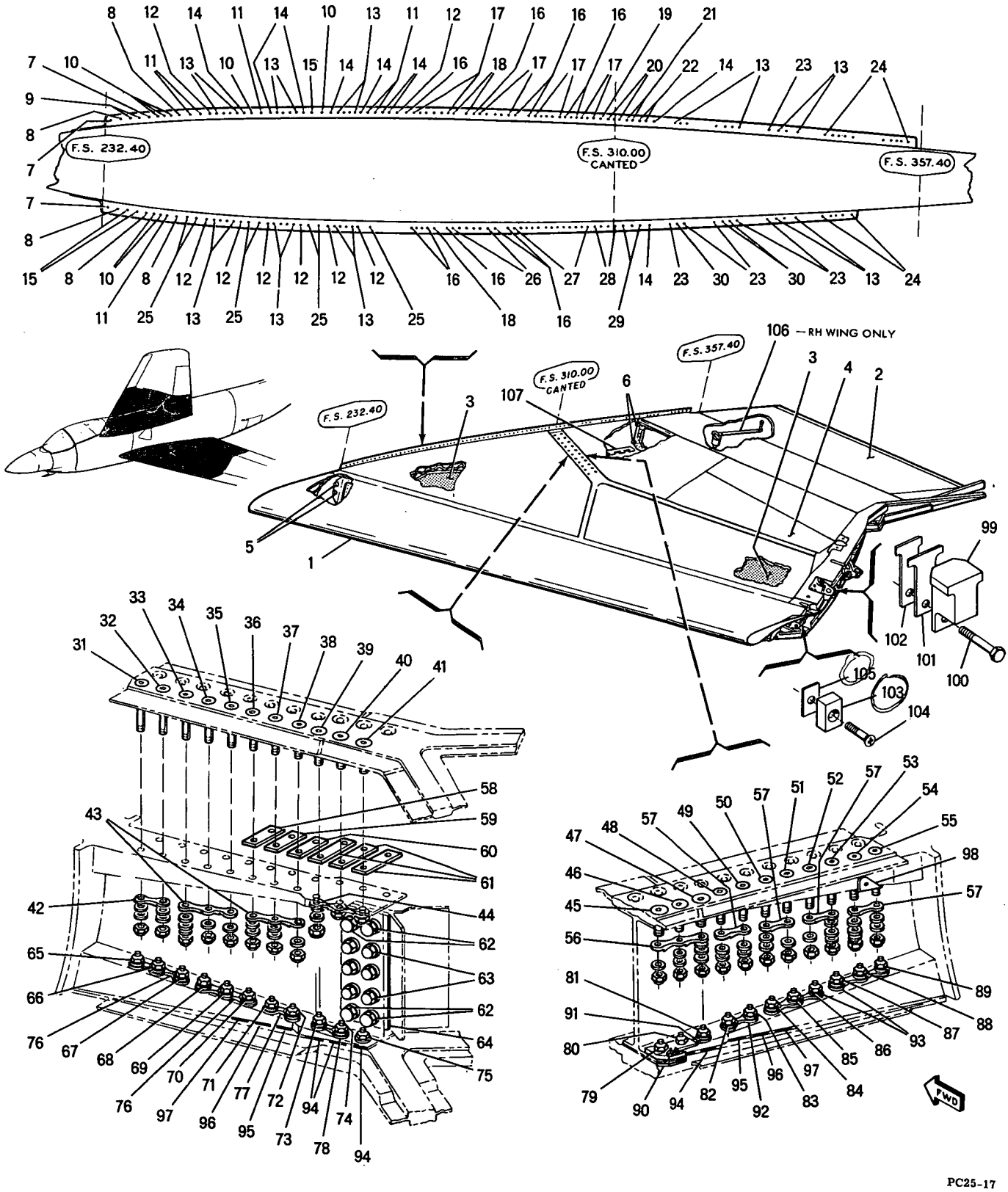

Figure 14 -- Inner Wing Panel Installation

FIGURE & INDEX NUMBER	PART NUMBER	1 2 3 4 5 6 7 DESCRIPTION	UNITS PER ASS'Y	USABLE ON CODE
14 -	25-11000- 1	PANEL INSTL, INNER WING LH, SEE FIG. 1-3 FOR NEXT HIGHER ASSEMBLY	1	
	25-11000- 2	PANEL INSTL, INNER WING RH, SEE FIG. 1-4 FOR NEXT HIGHER ASSEMBLY	1	
- 1	25-19001-301	• SLAT ASSEMBLY, INNER WING LEADING EDGE LH, SEE FIG. 17	1	
	25-19001-302	• SLAT ASSEMBLY, INNER WING LEADING EDGE RH, SEE FIG. 17	1	
- 2	25-18000- 1	• FLAP INSTL, TRAILING EDGE LH, SEE FIG. 16	1	
	25-18000- 2	• FLAP INSTL, TRAILING EDGE RH, SEE FIG. 16	1	
- 3	25-58009- 1	• TANKS INSTL, INNER WING FUEL LH, SEE FIG. 36	1	A
	25-58009-301	• TANKS INSTL, INNER WING FUEL LH, SEE FIG. 36	1	B-C
	25-58009- 2	• TANKS INSTL, INNER WING FUEL RH, SEE FIG. 36	1	A
	25-58009-302	• TANKS INSTL, INNER WING FUEL RH, SEE FIG. 36	1	B-C
- 4	25-11001- 1	• WING ASSY, INNER LH, SEE FIG. 15	1	
	25-11001- 2	• WING ASSY, INNER RH, SEE FIG. 15	1	
		ATTACHING PARTS		
- 5	NAS156-67	• BOLT	2	
	NAS143-16C	• WASHER	2	
	4M36-10002	• WASHER (MDA)	2	
	NAS143-16	• WASHER	AR	
	EB164	• NUT (EN)	2	
- 6	NAS150-38	• BOLT	2	
	NAS143-10C	• WASHER	2	
	4M36-05002	• WASHER (MDA)	2	
	AN960D1016	• WASHER	AR	
	EB108	• NUT (EN)	2	
- 7	AN509-516R18	• SCREW	3	
- 8	AN509-516R19	• SCREW	5	
- 9	AN509-516R20	• SCREW	2	
- 10	AN509-516R16	• SCREW	7	
- 11	AN509-516R17	• SCREW	6	
- 12	AN509-416R15	• SCREW	8	
- 13	AN509-416R13	• SCREW	37	
- 14	AN509-416R14	• SCREW	9	
- 15	AN509-516R15	• SCREW	3	
- 16	AN509-416R14	• SCREW	14	
	AN960D416	• WASHER	28	
	AN365-428	• NUT	14	
- 17	AN509-416R13	• SCREW	19	
	AN960D416	• WASHER	38	
	AN365-428	• NUT	19	
- 18	AN509-416R15	• SCREW	3	
	AN960D416	• WASHER	6	
	AN365-428	• NUT	3	
- 19	AN509-416R25	• SCREW	1	
	AN960D416	• WASHER	3	
	AN365-428	• NUT	1	
- 20	AN509-416R22	• SCREW	3	
	AN960D416	• WASHER	6	
	AN365-428	• NUT	3	
- 21	AN509-416R22	• SCREW	2	
- 22	AN509-416R24	• SCREW	2	
- 23	AN509-416R12	• SCREW	6	
- 24	AN509-10R12	• SCREW	15	
- 25	AN509-516R14	• SCREW	7	
- 26	AN509-416R13	• SCREW	6	
	AN960D416	• WASHER	6	
	AN960D416L	• WASHER	6	
	AN365-428	• NUT	6	
- 27	AN509-416R12	• SCREW	13	
	AN960D416	• WASHER	13	
	AN960D416L	• WASHER	13	
	AN365-428	• NUT	13	
- 28	AN509-416R20	• SCREW	4	
	AN960D416	• WASHER	8	
	AN365-428	• NUT	4	
- 29	AN509-416R20	• SCREW	3	
- 30	AN509-416R11	• SCREW	3	
- 31	3M24SA41	• BOLT (MDA)	1	
	AN960D816	• WASHER	1	
	AN960D816L	• WASHER	1	
	AN365-820	• NUT	1	
- 32	3M24SA37	• BOLT (MDA)	1	
	AN960D816	• WASHER	1	
	AN960D816L	• WASHER	1	
	AN365-820	• NUT	1	
- 33	3M24SA36	• BOLT (MDA)	1	
	AN960D816	• WASHER	2	
	AN960D816L	• WASHER	1	
	AN365-820	• NUT	1	

FIGURE & INDEX NUMBER	PART NUMBER	1 2 3 4 5 6 7 DESCRIPTION	UNITS PER ASS'Y	USABLE ON CODE
14 -		ATTACHING PARTS (CONT)		
- 34	3M24SA34	• BOLT (MDA)	1	
	AN960D816	• WASHER	1	
	AN365-820	• NUT	1	
- 35	3M24SA32	• BOLT (MDA)	1	
	AN960D816	• WASHER	1	
	AN365-820	• NUT	1	
- 36	3M24SA31	• BOLT (MDA)	1	
	AN960D816	• WASHER	2	
	AN365-820	• NUT	1	
- 37	3M24SA27	• BOLT (MDA)	1	
	AN960D816	• WASHER	2	
	AN365-820	• NUT	1	
- 38	3M24SA25	• BOLT (MDA)	1	
	AN960D816	• WASHER	1	
	AN365-820	• NUT	1	
- 39	3M25SA25	• BOLT (MDA)	1	
	AN960D916	• WASHER	2	
	AN365-918	• NUT	1	
- 40	3M25SA23	• BOLT (MDA)	1	
	AN960D916	• WASHER	2	
	AN365-918	• NUT	1	
- 41	3M25SA20	• BOLT (MDA)	1	
	AN960D916	• WASHER	2	
	AN365-918	• NUT	1	
- 42	25-32169- 5	• WASHER, WING CARRY THRU TAPERED STRIP	1	
- 43	25-32169- 3	• WASHER, WING CARRY THRU TAPERED STRIP	2	
- 44	25-32174- 3	• WASHER, WING CARRY THRU TAPERED STRIP	1	
- 45	3M25SA17	• BOLT (MDA)	1	
	AN960D916	• WASHER	1	
	AN365-918	• NUT	1	
- 46	3M25SA21	• BOLT (MDA)	1	
	AN960D916	• WASHER	2	
	AN365-918	• NUT	1	
- 47	3M25SA23	• BOLT (MDA)	1	
	AN960D916	• WASHER	2	
	AN960D916L	• WASHER	1	
	AN365-918	• NUT	1	
- 48	3M24SA24	• BOLT (MDA)	1	
	AN960D816	• WASHER	1	
	AN960D816L	• WASHER	1	
	AN365-820	• NUT	1	
- 49	3M24SA26	• BOLT (MDA)	1	
	AN960D816	• WASHER	2	
	AN365-820	• NUT	1	
- 50	3M24SA32	• BOLT (MDA)	1	
	AN960D816	• WASHER	2	
	AN365-820	• NUT	1	
- 51	3M24SA33	• BOLT (MDA)	1	
	AN960D816	• WASHER	1	
	AN365-820	• NUT	1	
- 52	3M24SA33	• BOLT (MDA)	1	
	AN960D816	• WASHER	2	
	AN365-820	• NUT	1	
- 53	3M24SA35	• BOLT (MDA)	1	
	AN960D816	• WASHER	2	
	AN960D816L	• WASHER	1	
	AN365-820	• NUT	1	
- 54	3M24SA37	• BOLT (MDA)	1	
	AN960D816	• WASHER	3	
	AN365-820	• NUT	1	
- 55	3M24SA40	• BOLT (MDA)	1	
	AN960D816	• WASHER	1	
	AN960D816L	• WASHER	1	
	AN365-820	• NUT	1	
- 56	25-32174- 3	• WASHER, WING CARRY THRU TAPERED STRIP	1	
- 57	25-32169- 5	• WASHER, WING CARRY THRU TAPERED STRIP	4	
- 58	25-11206- 5	• SHIM, WING TO FUSELAGE CARRY THRU ATTACHMENT	AR	
- 59	25-11206- 7	• SHIM, WING TO FUSELAGE CARRY THRU ATTACHMENT	AR	
- 60	25-11206- 9	• SHIM, WING TO FUSELAGE CARRY THRU ATTACHMENT	AR	
- 61	25-11206- 11	• SHIM, WING TO FUSELAGE CARRY THRU ATTACHMENT	AR	
- 62	NAS150-39	• BOLT	4	
	NAS143-10C	• WASHER	4	
	AN960D1016	• WASHER	AR	
	AN365-1018	• NUT	4	
- 63	NAS149-38	• BOLT	6	
	NAS143-9C	• WASHER	6	
	AN960D916	• WASHER	AR	
	AN365-918	• NUT	6	
- 64	25-11180- 3	• SHIM, WING TO FUSELAGE SPLICE	2	

FIGURE & INDEX NUMBER	PART NUMBER	1 2 3 4 5 6 7 DESCRIPTION	UNITS PER ASS'Y	USABLE ON CODE
14 -		ATTACHING PARTS (CONT)		
- 65	3M24SA43	• BOLT (MDA)	1	
	AN960D816	• WASHER	1	
	AN960D816L	• WASHER	1	
	AN365-820	• NUT	1	
- 66	3M24SA42	• BOLT (MDA)	1	
	AN960D816	• WASHER	2	
	AN960D816L	• WASHER	1	
	AN365-820	• NUT	1	
- 67	3M24SA40	• BOLT (MDA)	1	
	AN960D816L	• WASHER	1	
	AN960D816	• WASHER	1	
	AN365-820	• NUT	1	
- 68	3M24SA37	• BOLT (MDA)	1	
	AN960D816	• WASHER	2	
	AN960D816L	• WASHER	1	
	AN365-820	• NUT	1	
- 69	3M24SA36	• BOLT (MDA)	1	
	AN960D816	• WASHER	3	
	AN365-820	• NUT	1	
- 70	3M24SA34	• BOLT (MDA)	1	
	AN960D816	• WASHER	2	
	AN960D816L	• WASHER	1	
	AN365-820	• NUT	1	
- 71	3M24SA33	• BOLT (MDA)	1	
	AN960D816	• WASHER	1	
	AN365-820	• NUT	1	
- 72	3M24SA31	• BOLT (MDA)	1	
	AN960D816	• WASHER	2	
	AN365-820	• NUT	1	
- 73	3M25SA30	• BOLT (MDA)	1	
	AN960D916	• WASHER	3	
	AN365-918	• NUT	1	
- 74	3M25SA26	• BOLT (MDA)	1	
	AN960D916	• WASHER	2	
	AN365-918	• NUT	1	
- 75	3M25SA24	• BOLT (MDA)	1	
	AN960D916	• WASHER	1	
	AN960D916L	• WASHER	1	
	AN365-918	• NUT	1	
- 76	25-32169- 3	• WASHER, WING CARRY THRU TAPERED STRIP	2	
- 77	25-32169- 5	• WASHER, WING CARRY THRU TAPERED STRIP	1	
- 78	25-32174- 5	• WASHER, WING CARRY THRU TAPERED STRIP	1	
- 79	3M25SA26	• BOLT (MDA)	1	
	AN960D916	• WASHER	3	
	AN365-918	• NUT	1	
- 80	3M25SA26	• BOLT (MDA)	1	
	AN960D916	• WASHER	3	
	AN365-918	• NUT	1	
- 81	3M25SA27	• BOLT (MDA)	1	
	AN960D916	• WASHER	2	
	AN960D916L	• WASHER	1	
	AN365-918	• NUT	1	
- 82	3M24SA31	• BOLT (MDA)	1	
	AN960D816	• WASHER	3	
	AN365-820	• NUT	1	
- 83	3M24SA32	• BOLT (MDA)	1	
	AN960D816	• WASHER	2	
	AN960D816L	• WASHER	1	
	AN365-820	• NUT	1	
- 84	3M24SA33	• BOLT (MDA)	1	
	AN960D816	• WASHER	1	
	AN960D816L	• WASHER	1	
	AN365-820	• NUT	1	
- 85	3M24SA35	• BOLT (MDA)	1	
	AN960D816	• WASHER	3	
	AN365-820	• NUT	1	
- 86	3M24SA36	• BOLT (MDA)	1	
	AN960D816	• WASHER	2	
	AN365-820	• NUT	1	
- 87	3M24SA40	• BOLT (MDA)	1	
	AN960D816	• WASHER	3	
	AN365-820	• NUT	1	
- 88	3M24SA41	• BOLT (MDA)	1	
	AN960D816	• WASHER	2	
	AN960D816L	• WASHER	1	
	AN365-820	• NUT	1	

FIGURE & INDEX NUMBER	PART NUMBER	1 2 3 4 5 6 7 DESCRIPTION	UNITS PER ASS'Y	USABLE ON CODE
14 -		ATTACHING PARTS (CONT)		
- 89	3M245A41	• BOLT (MDA)	1	
	AN960D816	• WASHER	1	
	AN365-820	• NUT	1	
- 90	25-11119- 1	• SILL ASSEMBLY, MAIN LG FORK DOOR FORWARD LH	1	
	25-11119- 2	• SILL ASSEMBLY, MAIN LG FORK DOOR FORWARD RH	1	
	AN509-10R15	• • SCREW	2	
	AN960D10	• • WASHER	4	
	AN364-1032	• • NUT	2	
	25-11119- 9	• • PLATE	1	
	25-11119- 5	• • SHIM	AR	
	25-11119- 7	• • SHIM	AR	
- 91	25-32174- 7	• WASHER, WING CARRY THRU TAPERED STRIP	1	
- 92	25-32169- 5	• WASHER, WING CARRY THRU TAPERED STRIP	1	
- 93	25-32169- 3	• WASHER, WING CARRY THRU TAPERED STRIP	2	
- 94	25-11206- 11	• SHIM, WING TO FUSELAGE CARRY THRU ATTACHMENT	AR	
- 95	25-11206- 9	• SHIM, WING TO FUSELAGE CARRY THRU ATTACHMENT	AR	
- 96	25-11206- 7	• SHIM, WING TO FUSELAGE CARRY THRU ATTACHMENT	AR	
- 97	25-11206- 5	• SHIM, WING TO FUSELAGE CARRY THRU ATTACHMENT	AR	
		¤----¤-¤-¤----¤		
- 98	25-75062- 1	• BRACKET ASSY, WIRE BUNDLE SUPPORT LH	1	
	25-75062- 2	• BRACKET ASSY, WIRE BUNDLE SUPPORT RH	1	
- 99	25-11134- 3	• STOP, INNER WING MAIN SPAR HINGE LH	1	
	25-11134- 4	• STOP, INNER WING MAIN SPAR HINGE RH	1	
		ATTACHING PARTS		
-100	NAS428-3-16	• BOLT	1	
-101	25-11135- 5	• SHIM, INNER WING MAIN SPAR HINGE STOP	1	
-102	25-11135- 3	• SHIM, INNER WING MAIN SPAR HINGE STOP	1	
		¤----¤-¤-¤----¤		
-103	25-11178- 3	• STOP, INNER WING FRONT SPAR	1	
		ATTACHING PARTS		
-104	AN509-416R24	• SCREW	1	
-105	25-11179- 3	• SHIM, INNER WING FRONT SPAR STOP	1	
	1452-048	• NUT (EN)	1	
		¤----¤-¤-¤----¤		
-106	25-75068- 1	• TRANSMITTER INSTL, WING FLAP POSITION RIGHT WING ONLY, SEE FIG. 33	1	
-107	25-42201- 1	• HINGE ASSY, MAIN LG INBOARD DOOR LH	1	
	25-42201- 2	• HINGE ASSY, MAIN LG INBOARD DOOR RH	1	
	25-42201- 17	• • SHIM, FWD	AR	
	25-42201- 3	• • HINGE, HALF LH FWD	1	
	25-42201- 4	• • HINGE, HALF RH FWD	1	
	25-42201- 13	• • SHIM, AFT	AR	
	25-42201- 5	• • HINGE, HALF LH AFT	1	
	25-42201- 6	• • HINGE, HALF RH AFT	1	

FIGURE & INDEX NUMBER	PART NUMBER	1 2 3 4 5 6 7 DESCRIPTION	UNITS PER ASS'Y	USABLE ON CODE
15 -	25-11001- 1	WING ASSEMBLY, INNER LH, SEE FIG. 14-4 FOR NEXT HIGHER ASSEMBLY	REF	
	25-11001- 2	WING ASSEMBLY, INNER RH, SEE FIG. 14-4 FOR NEXT HIGHER ASSEMBLY	REF	
- 1	25-69006- 1	• HYDRAULIC INSTL, INNER WING LH, SEE FIG. 27 & 28	1	
	25-69006- 2	• HYDRAULIC INSTL, INNER WING RH, SEE FIG. 27 & 28	1	
	25-11001- 3	• WING ASSY, INNER LH	1	
	25-11001- 4	• WING ASSY, INNER RH	1	
- 2	25-11002- 1	• • WING ASSY, INNER STRUCTURAL LH, SEE FIG. 18	1	
	25-11002- 2	• • WING ASSY, INNER STRUCTURAL RH, SEE FIG. 18	1	
- 3	25-58009- 3	• • SYSTEM INSTL, INNER WING FUEL LH, SEE FIG. 35	1	A
	25-58009-303	• • SYSTEM INSTL, INNER WING FUEL LH, SEE FIG. 35	1	B-C
	25-58009- 4	• • SYSTEM INSTL, INNER WING FUEL RH, SEE FIG. 35	1	A
	25-58009-304	• • SYSTEM INSTL, INNER WING FUEL RH, SEE FIG. 35	1	B-C
- 4	25-69006- 3	• • HYDRAULIC INSTL, INNER WING LH, SEE FIG. 27 & 28	1	A-B
	25-69006- 5	• • HYDRAULIC INSTL, INNER WING LH, SEE FIG. 27 & 28	1	C-F
	25-69006- 4	• • HYDRAULIC INSTL, INNER WING RH, SEE FIG. 27 & 28	1	A-B
	25-69006- 6	• • HYDRAULIC INSTL, INNER WING RH, SEE FIG. 27 & 28	1	C-F
- 5	25-67302- 1	• • CONTROLS INSTL, INNER WING SLAT LH, SEE FIG. 25	1	
	25-67302- 2	• • CONTROLS INSTL, INNER WING SLAT RH, SEE FIG. 25	1	
- 6	25-61250- 1	• • CONTROLS INSTL, INNER WING SURFACE LH, SEE FIG. 26	1	
	25-61250- 2	• • CONTROLS INSTL, INNER WING SURFACE RH, SEE FIG. 26	1	
- 7	25-75000- 1	• • WIRING INSTL, INNER WING LH, SEE FIG. 34	1	A-B
	25-75000-301	• • WIRING INSTL, INNER WING LH, SEE FIG. 34	1	C-F
	25-75000- 2	• • WIRING INSTL, INNER WING RH, SEE FIG. 34	1	A-B
	25-75000-302	• • WIRING INSTL, INNER WING RH, SEE FIG. 34	1	C-F
- 8	25-14500- 1	• • MECHANISM INSTL, PIN PULL LH, SEE FIG. 23	1	
	25-14500- 2	• • MECHANISM INSTL, PIN PULL RH, SEE FIG. 23	1	
- 9	25-14550-303	• • FLAG INSTL, WING FOLD WARNING LH, SEE FIG. 23	1	
	25-14550-304	• • FLAG INSTL, WING FOLD WARNING RH, SEE FIG. 23	1	
- 10	25-42250- 1	• • LATCH ASSY, MAIN LG UP LH, SEE FIG. 32	1	
	25-42250- 2	• • LATCH ASSY, MAIN LG UP RH, SEE FIG. 32	1	
	25-75050- 1	• • POWER SUPPLY INSTL, EXTERNAL, RIGHT WING ONLY	1	
- 11	25-75057- 3	• • • BUS BAR, D-C EXTERNAL POWER RECEPTACLE	1	
		ATTACHING PARTS		
- 12	AN6-7A	• • • BOLT	1	
	AN960D616	• • • WASHER	2	
	AN961-616	• • • WASHER	1	
	AN364-624	• • • NUT	1	
		¤----¤-¤-¤----¤		
- 13	25-75052- 3	• • • BRACE, D-C EXTERNAL POWER RECEPTACLE	2	
		ATTACHING PARTS		
- 14	NAS229-10	• • • SCREW	2	
	AN960D10	• • • WASHER	4	
	AN364-1032	• • • NUT	2	
- 15	NAS229-18	• • • SCREW	4	
	AN960D10	• • • WASHER	8	
	AN364-1032	• • • NUT	4	
		¤----¤-¤-¤----¤		
	25-75050- 3	• • • RECEPTACLE ASSY	1	
- 16	25-75054- 3	• • • • EXTENSION, D-C POWER RECEPTACLE	1	
- 17	AN2552-3A	• • • • RECEPTACLE, D-C EXTERNAL POWER	1	
- 18	25-75051- 3	• • • COVER, A-C EXTERNAL POWER RECEPTACLE	1	
		ATTACHING PARTS		
- 19	NAS229-34	• • • SCREW	2	
	AN960D10	• • • WASHER	4	
	AN364-1032	• • • NUT	2	
		¤----¤-¤-¤----¤		

Inner Wing

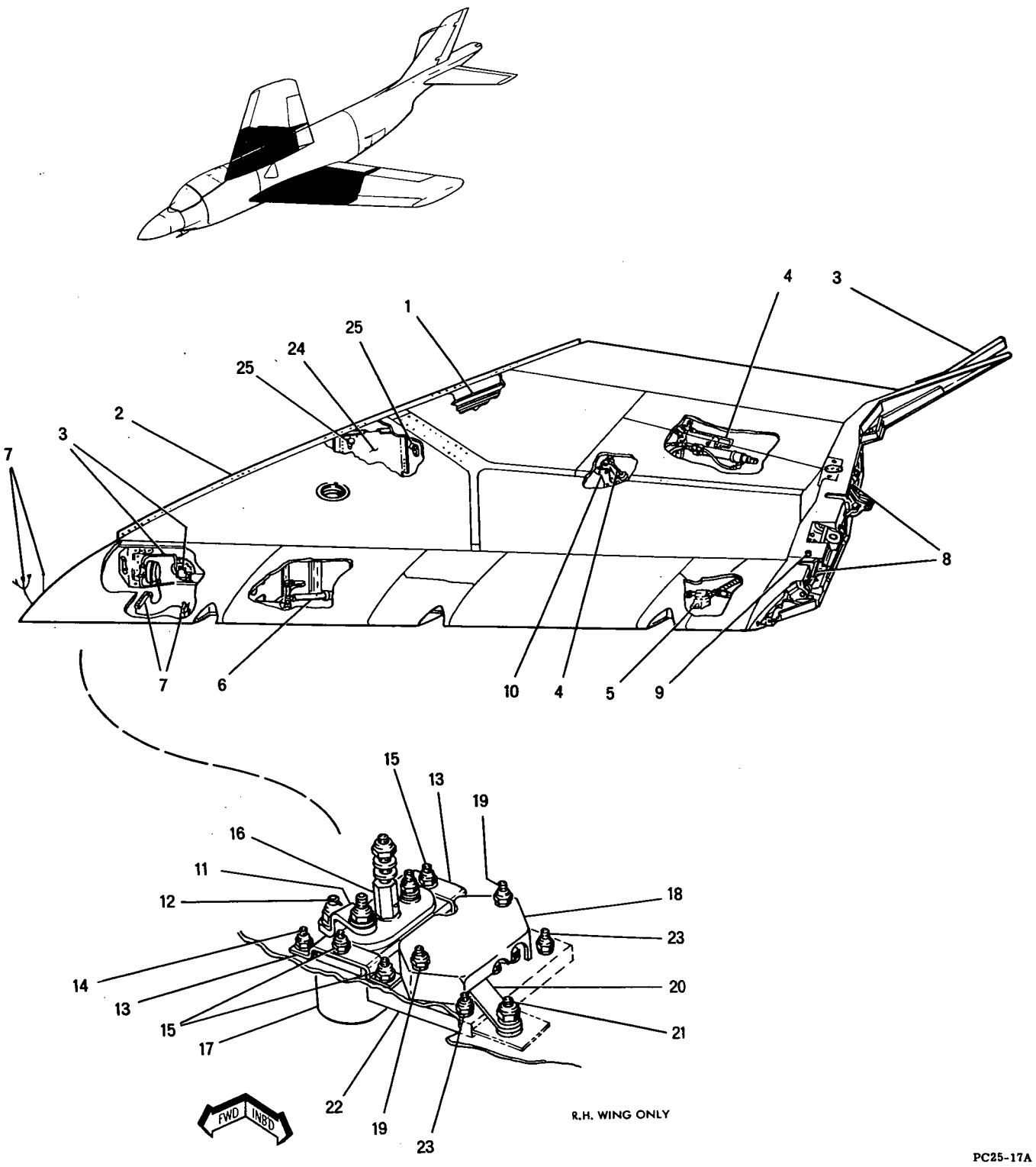

Figure 15 -- Inner Wing Assembly

FIGURE & INDEX NUMBER	PART NUMBER	1 2 3 4 5 6 7 DESCRIPTION	UNITS PER ASS'Y	USABLE ON CODE
15 - 20	25-75058- 3	• • • BUS BAR, A-C EXTERNAL POWER RECEPTACLE	1	
		ATTACHING PARTS		
- 21	AN6-7A	• • • BOLT	1	
	AN960D616	• • • WASHER	2	
	AN961-616	• • • WASHER	1	
	AN364-624	• • • NUT	1	
- 22	AN3114-1B	• • • RECEPTACLE, A-C EXTERNAL POWER	1	
		ATTACHING PARTS		
- 23	NAS229-17	• • • SCREW	2	
	AN960D10	• • • WASHER	4	
	AN364-1032	• • • NUT	2	
	25-11149- 89	• SUPPORT ASSY, TANK LH	1	
	25-11149- 90	• SUPPORT ASSY, TANK RH	1	
- 24	25-11149- 37	• • WEB, REMOVABLE LH	1	
	25-11149- 38	• • WEB, REMOVABLE RH	1	
		ATTACHING PARTS		
	NAS229-9	• • SCREW	40	
	AN960D10L	• • WASHER	40	
- 25	25-58181- 3	• • CLIP, WING TANK SUPPORT	3	

Inner Wing

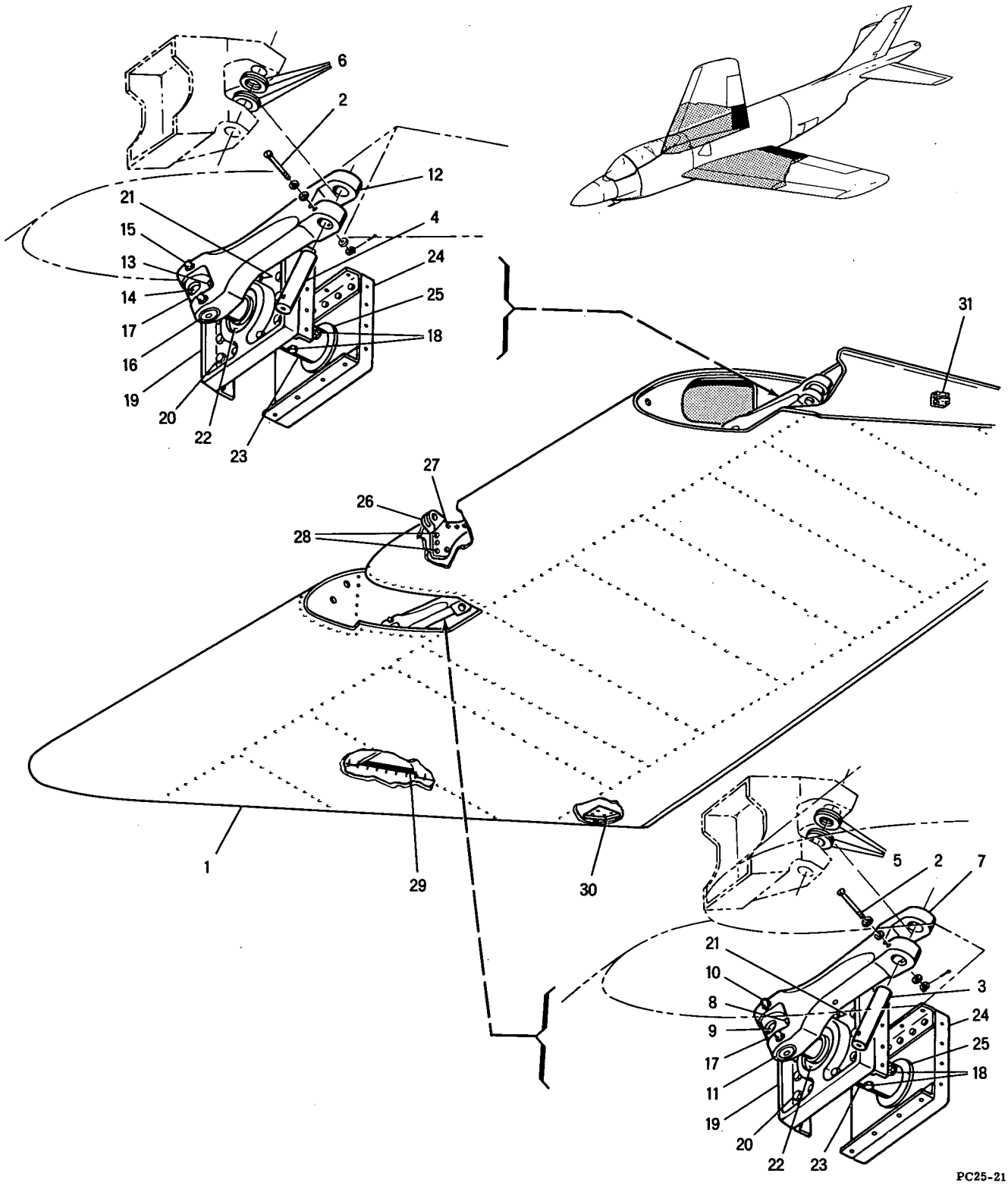

Figure 16 - Trailing Edge Flap Installation

FIGURE & INDEX NUMBER	PART NUMBER	1 2 3 4 5 6 7 DESCRIPTION	UNITS PER ASS'Y	USABLE ON CODE
16 -	25-18000- 1	FLAP INSTL, TRAILING EDGE LH, SEE FIG. 14-2 FOR NEXT HIGHER ASSY	REF	
	25-18000- 2	FLAP INSTL, TRAILING EDGE RH, SEE FIG. 14-2 FOR NEXT HIGHER ASSY	REF	
- 1	25-18002-301	• FLAP ASSY, STRUCT LH	1	
	25-18002-302	• FLAP ASSY, STRUCT LR	1	
		ATTACHING PARTS		
- 2	AN23-31	• BOLT	2	
	AN960D10L	• WASHER	6	
	AN320-3	• NUT	2	
	AN380-2-3	• PIN, COTTER	2	
- 3	25-18060- 5	• PIN, INBOARD FLAP ARM	1	
- 4	25-18061- 5	• PIN, OUTBD FLAP ARM	1	
- 5	4M36-06004	• WASHER (MDA) INBOARD	AR	
- 6	4M36-05016	• WASHER (MDA) OUTBOARD	AR	
		¤----¤-¤-¤----¤		
- 7	25-18004- 1	• • ARM ASSEMBLY, FLAP INBOARD LH	1	
	25-18004- 2	• • ARM ASSEMBLY, FLAP INBOARD RH	1	
		ATTACHING PARTS		
- 8	AN3-16A	• • BOLT	1	
	AN960-10L	• • WASHER	2	
	AN960D10L	• • WASHER	1	
	AN365-1032	• • NUT	1	
- 9	25-18006- 3	• • PIN, FLAP HINGE	1	
	AN960-1216L	• • WASHER	2	
	4M36-06004	• • WASHER (MDA)	AR	
		¤----¤-¤-¤----¤		
- 10	AN944-201	• • • FITTING, LUB	2	
- 11	25-18054- 3	• • • BUSHING, FLAP ARM AND FITTING	2	
- 12	25-18005- 1	• • ARM ASSEMBLY, FLAP OUTBOARD LH	1	
	25-18005- 2	• • ARM ASSEMBLY, FLAP OUTBOARD RH	1	
		ATTACHING PARTS		
- 13	AN3-16A	• • BOLT	1	
	AN960-10L	• • WASHER	2	
	AN960D10L	• • WASHER	1	
	AN365-1032	• • NUT	1	
- 14	25-18006- 3	• • PIN, FLAP HINGE	1	
	AN960-1216L	• • WASHER	2	
	4M36-06004	• • WASHER (MDA)	AR	
		¤----¤-¤-¤----¤		
- 15	AN944-201	• • • FITTING, LUB	2	
- 16	25-18054- 3	• • • BUSHING, FLAP ARM AND FITTING	2	
- 17	25-18014- 3	• • LINK, FLAP ARM TO FLAP	2	
		ATTACHING PARTS		
- 18	AN4-15A	• • BOLT	4	
	AN960-416L	• • WASHER	4	
	AN960-416	• • WASHER	4	
	AN365-428	• • NUT	4	
		¤----¤-¤-¤----¤		
- 19	25-18013- 5	• • FITTING ASSEMBLY, FLAP LINK SUPPORT FWD	2	
		ATTACHING PARTS		
- 20	AN3-7A	• • BOLT	12	
	AN960D10	• • WASHER	12	
- 21	AN3-5A	• • BOLT	8	
	AN960D10	• • WASHER	8	
		¤----¤-¤-¤----¤		
- 22	AN201KP16A	• • • BEARING	1	
- 23	25-18039- 3	• • SLEEVE, FLAP LINK SUPPORT	2	
- 24	25-18013- 1	• • FITTING ASSEMBLY, FLAP LINK SUPPORT AFT	2	
- 25	AN201KP16A	• • • BEARING	1	
	25-18034- 3	• • RIB ASSY, FLAP LH	1	
	25-18034- 4	• • RIB ASSY, FLAP RH	1	
- 26	25-18040- 5	• • • FITTING, FLAP ACTUATOR LH	1	
	25-18040- 6	• • • FITTING, FLAP ACTUATOR RH	1	
		ATTACHING PARTS		
- 27	AN3-5A	• • • BOLT	4	
	AN960D10L	• • • WASHER	4	
	AN960D10	• • • WASHER	4	
	AN365-1032	• • • NUT	4	
- 28	AN4-7A	• • • BOLT	3	
	AN960D416	• • • WASHER	6	
	AN365-428	• • • NUT	3	
		¤----¤-¤-¤----¤		
- 29	25-18002- 15	• • SEAL, SELECTED FROM 9M79B (MDA)	1	
- 30	25-18055- 5	• • STOP, FLAP INBD LH	1	
	25-18055- 6	• • STOP, FLAP INBD RH	1	
	25-18017- 3	• • RIB ASSY, FLAP OUTBOARD CLOSURE LH	1	
	25-18017- 4	• • RIB ASSY, FLAP OUTBOARD CLOSURE RH	1	
- 31	25-18052- 3	• • • STOP, FLAP OUTBOARD	1	

Inner Wing

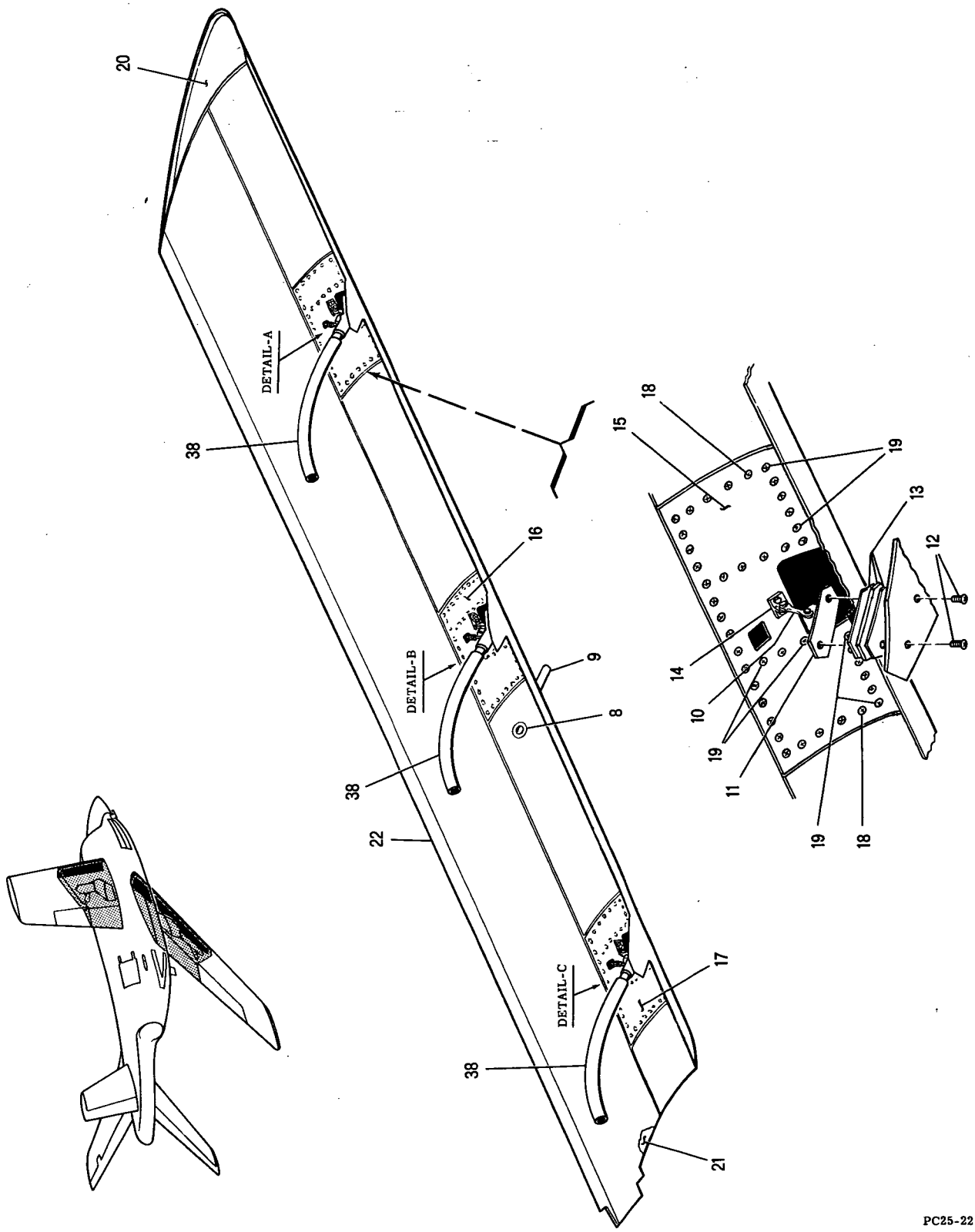

Figure 17 -- Inner Wing Leading Edge Slat Assembly (Sheet 1 of 2)

Inner Wing

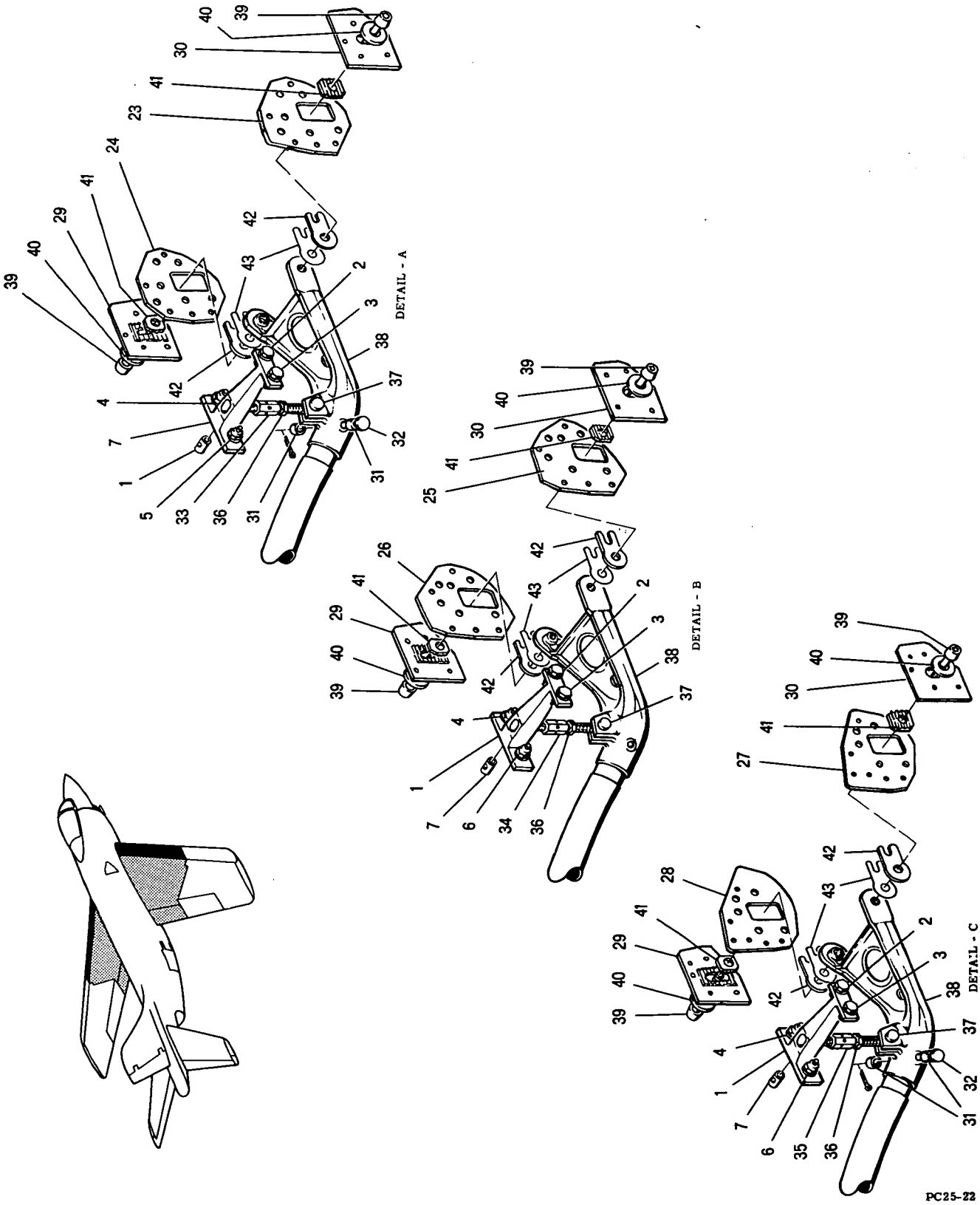

Figure 17 -- Inner Wing Leading Edge Slat Assembly (Sheet 2 of 2)

FIGURE & INDEX NUMBER	PART NUMBER	1 2 3 4 5 6 7 DESCRIPTION	UNITS PER ASS'Y	USABLE ON CODE
17 -	25-19001-301	SLAT ASSEMBLY, INNER WING LEADING EDGE LH, SEE FIG. 14-1 FOR NEXT HIGHER ASSEMBLY	REF	
	25-19001-302	SLAT ASSEMBLY, INNER WING LEADING EDGE RH, SEE FIG. 14-1 FOR NEXT HIGHER ASSEMBLY	REF	
	25-19002-301	• STRUCTURAL ASSY, INNER WING LE SLAT LH	1	
	25-19002-302	• STRUCTURAL ASSY, INNER WING LE SLAT RH	1	
- 1	25-19008- 1	• • FITTING ASSY, AFT SLAT TRACK ATTACH	3	
		ATTACHING PARTS		
- 2	AN3-6A	• • BOLT	3	
	AN960D10L	• • WASHER	3	
	AN960D10	• • WASHER	6	
	AN364-1032	• • NUT	3	
- 3	AN3-6A	• • BOLT	3	
	AN960D10L	• • WASHER	3	
- 4	NAS464-4A6	• • BOLT, INBD TRACK	1	
	NAS464-4A7	• • BOLT, CENTER & OUTBOARD TRACK	2	
	AN960D416L	• • WASHER	3	
	AN960D416	• • WASHER	3	
	AN364-428	• • NUT	3	
- 5	NAS144-15	• • BOLT, INBD TRACK	1	
- 6	NAS144-16	• • BOLT, CENTER & OUTBOARD TRACK	2	
	NAS143-4C	• • WASHER	3	
		¤----¤-¤-¤----¤		
	25-19008- 5	• • • FITTING	1	
- 7	25-19014- 5	• • TRUNNION, AFT SLAT TRACK ATTACH	3	
- 8	25-58205- 3	• • SEAL, WING LEADING EDGE RAM AIR INLET	1	
- 9	25-58182- 1	• • INLET ASSY, WING LEADING EDGE RAM AIR LH	1	
	25-58182- 2	• • INLET ASSY, WING LEADING EDGE RAM AIR RH	1	
	25-58182- 15	• • • GROMMET	1	
- 10	25-19524- 7	• • LINK, SLAT TRACK CLOSURE TAB SUPPORT INBD TRACK	1	
	25-19524- 9	• • LINK, SLAT TRACK CLOSURE TAB SUPPORT CENTER TRACK	1	
	25-19524- 11	• • LINK, SLAT TRACK CLOSURE TAB SUPPORT OUTBD TRACK	1	
		ATTACHING PARTS		
	AN3-6A	• • BOLT	6	
	AN960D10L	• • WASHER	6	
	AN960D10	• • WASHER	12	
	AN960D10	• • WASHER, OUTBD TRACK ONLY	1	
	AN365-1032	• • NUT	6	
		¤----¤-¤-¤----¤		
- 11	25-19025- 3	• • CLIP, INNER WING SLAT TRACK CLOSURE TAB LH, LOWER	3	
	25-19025- 4	• • CLIP, INNER WING SLAT TRACK CLOSURE TAB RH, LOWER	3	
		ATTACHING PARTS		
- 12	AN509-10R13	• • SCREW, INBD TRACK	2	
	AN509-10R12	• • SCREW, CENTER & OUTBOARD TRACK	4	
		¤----¤-¤-¤----¤		
- 13	25-19026- 3	• • SHIM, INNER WING SLAT TRACK CLOSURE TAB LH, INBD TRACK	3	
	25-19026- 4	• • SHIM, INNER WING SLAT TRACK CLOSURE TAB RH, INBD TRACK	3	
	25-19026- 3	• • SHIM, INNER WING SLAT TRACK CLOSURE TAB LH, CENTER & OUTBOARD TRACK	4	
	25-19026- 4	• • SHIM, INNER WING SLAT TRACK CLOSURE TAB RH, CENTER & OUTBOARD TRACK	4	
- 14	25-19526- 3	• • CLIP, SLAT TRACK CLOSURE TAB, UPPER	3	
		ATTACHING PARTS		
	AN509-10R10	• • SCREW	6	
	AN960D10	• • WASHER	6	
	AN364-1032	• • NUT	6	
		¤----¤-¤-¤----¤		
- 15	25-19002- 33	• • DOOR ASSEMBLY, INNER WING SLAT, INBOARD LH	1	
	25-19002- 34	• • DOOR ASSEMBLY, INNER WING SLAT, INBOARD RH	1	
- 16	25-19002- 39	• • DOOR ASSEMBLY, INNER WING SLAT, CENTER LH	1	
	25-19002- 40	• • DOOR ASSEMBLY, INNER WING SLAT, CENTER RH	1	
- 17	25-19002- 45	• • DOOR ASSEMBLY, INNER WING SLAT, OUTBOARD LH	1	
	25-19002- 46	• • DOOR ASSEMBLY, INNER WING SLAT, OUTBOARD RH	1	
		ATTACHING PARTS		
- 18	AN509-10R10	• • SCREW	72	
- 19	AN509-10R11	• • SCREW	60	
		¤----¤-¤-¤----¤		

FIGURE & INDEX NUMBER	PART NUMBER	1	2	3	4	5	6	7	DESCRIPTION	UNITS PER ASS'Y	USABLE ON CODE
17 - 20	25-19024- 5	•	•						RIB, SLAT INBOARD CLOSURE LH	1	
	25-19024- 6	•	•						RIB, SLAT INBOARD CLOSURE RH	1	
- 21	25-19030- 3	•	•						RIB, SLAT OUTBOARD CLOSURE AFT LH	1	
	25-19030- 4	•	•						RIB, SLAT OUTBOARD CLOSURE AFT RH	1	
- 22	25-19002- 23	•	•						TRAILING EDGE, SLAT LH	1	
	25-19002- 24	•	•						TRAILING EDGE, SLAT RH	1	
- 23	25-19043- 3	•	•						DOUBLER, INNER WING SLAT TRACK LH	1	
	25-19043- 4	•	•						DOUBLER, INNER WING SLAT TRACK RH	1	
- 24	25-19043- 5	•	•						DOUBLER, INNER WING SLAT TRACK LH	1	
	25-19043- 6	•	•						DOUBLER, INNER WING SLAT TRACK RH	1	
- 25	25-19043- 7	•	•						DOUBLER, INNER WING SLAT TRACK LH	1	
	25-19043- 8	•	•						DOUBLER, INNER WING SLAT TRACK RH	1	
- 26	25-19043- 9	•	•						DOUBLER, INNER WING SLAT TRACK LH	1	
	25-19043- 10	•	•						DOUBLER, INNER WING SLAT TRACK RH	1	
- 27	25-19043- 11	•	•						DOUBLER, INNER WING SLAT TRACK LH	1	
	25-19043- 12	•	•						DOUBLER, INNER WING SLAT TRACK RH	1	
- 28	25-19043- 13	•	•						DOUBLER, INNER WING SLAT TRACK LH	1	
	25-19043- 14	•	•						DOUBLER, INNER WING SLAT TRACK RH	1	
- 29	25-19042- 3	•	•						PLATE, INNER WING SLAT ADJUSTMENT OUTBD LH, INBD RH	3	
- 30	25-19042- 4	•	•						PLATE, INNER WING SLAT ADJUSTMENT INBD LH, OUTBD RH	3	
- 31	25-19027- 3	•							UPSTOP, LEADING EDGE SLAT, INBD & OUTBD TRACK	4	
									ATTACHING PARTS		
- 32	AN396-73	•							PIN, FLAT HEAD		
	AN381-3-16	•							PIN, COTTER	2	
									¤----¤-¤-¤----¤	2	
- 33	25-19017- 7	•							SCREW, SLAT UPPER ADJUSTMENT TURNBUCKLE, INBD TRACK	1	
- 34	25-19017- 5	•							SCREW, SLAT UPPER ADJUSTMENT TURNBUCKLE, CENTER TRACK	1	
- 35	25-19017- 3	•							SCREW, SLAT UPPER ADJUSTMENT TURNBUCKLE, OUTBOARD TRACK	1	
- 36	25-19015- 3	•							SCREW, SLAT LOWER ADJUSTMENT TURNBUCKLE	3	
- 37	25-19014- 3	•							TRUNNION, AFT SLAT TRACK ATTACH	3	
- 38	25-19004- 1	•							TRACK ASSY, SLAT LH	3	
	25-19004- 2	•							TRACK ASSY, SLAT RH	3	
									ATTACHING PARTS		
- 39	NAS147-26	•							BOLT	6	
									¤----¤-¤-¤----¤		
- 40	25-19044- 5	•							WASHER, WING SLAT SPECIAL	6	
- 41	25-19041- 3	•							BUSHING, INNER WING SLAT POSITIONING	6	
- 42	25-19047- 5	•							SHIM, INNER WING SLAT	6	
- 43	25-19047- 3	•							RETAINER, INNER WING SLAT	6	

Inner Wing

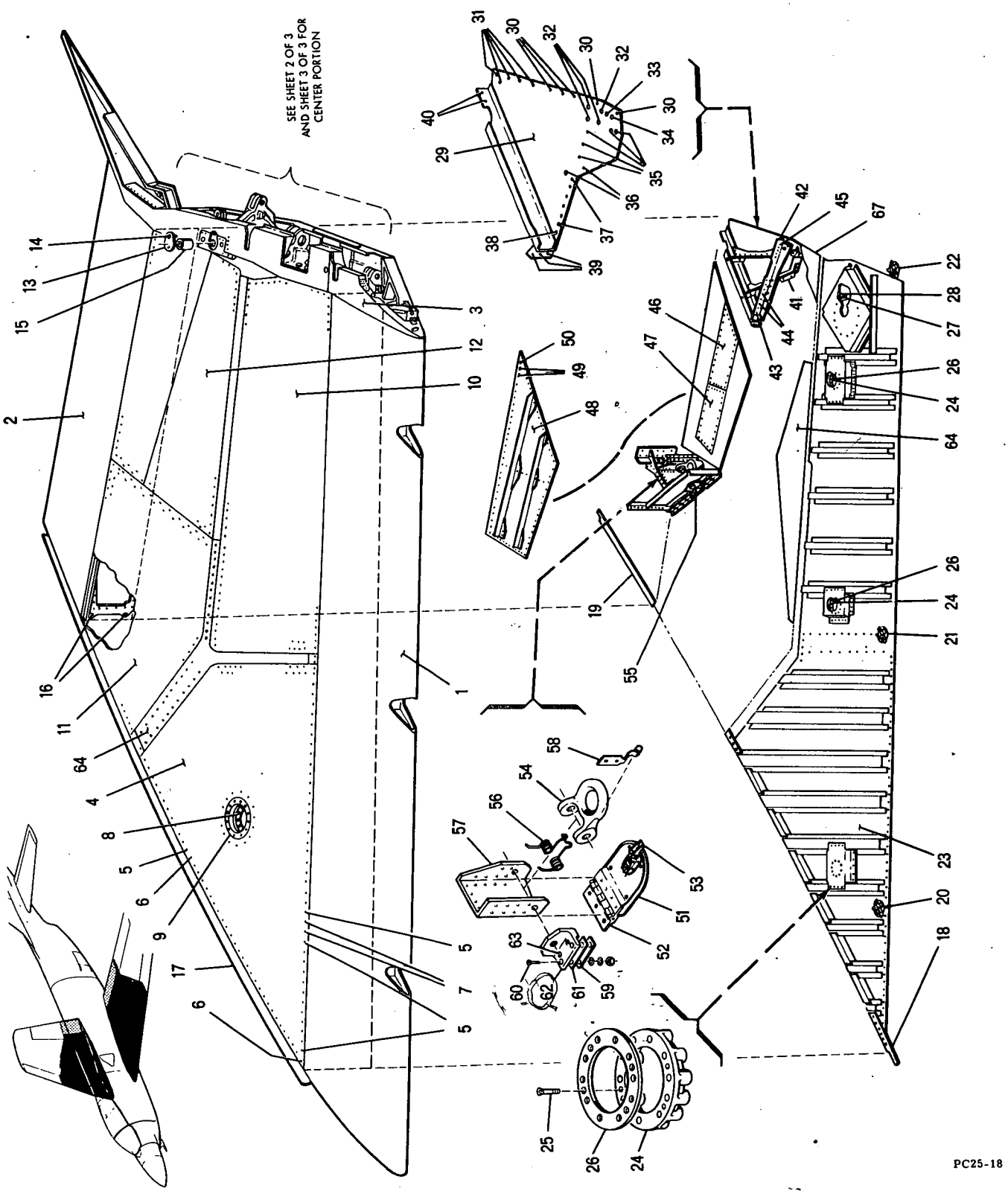

Figure 18 -- Inner Structural Wing Assembly (Sheet 1 of 3)

FIGURE & INDEX NUMBER	PART NUMBER	1 2 3 4 5 6 7 DESCRIPTION	UNITS PER ASS'Y	USABLE ON CODE
18 -	25-11002- 1	WING ASSY, INNER STRUCTURAL LH, SEE FIG. 15-2 FOR NEXT HIGHER ASSEMBLY	REF	
	25-11002- 2	WING ASSY, INNER STRUCTURAL RH, SEE FIG. 15-2 FOR NEXT HIGHER ASSEMBLY	REF	
- 1	25-11078- 1	• LEADING EDGE ASSY, INNER WING LH, SEE FIG. 20	1	A-B
	25-11078-301	• LEADING EDGE ASSY, INNER WING LH, SEE FIG. 20	1	C
	25-11078- 2	• LEADING EDGE ASSY, INNER WING RH, SEE FIG. 20	1	A-B
	25-11078-302	• LEADING EDGE ASSY, INNER WING RH, SEE FIG. 20	1	C
- 2	25-11074- 1	• TRAILING EDGE ASSY, INNER WING LH, SEE FIG. 22	1	A
	25-11074-301	• TRAILING EDGE ASSY, INNER WING LH, SEE FIG. 22	1	B-C
	25-11074- 2	• TRAILING EDGE ASSY, INNER WING RH, SEE FIG. 22	1	A
	25-11074-302	• TRAILING EDGE ASSY, INNER WING RH, SEE FIG. 22	1	B-C
- 3	25-11090- 1	• SEAL ASSY, INNER WING FOLD LH, SEE FIG. 19	1	A-B10
	25-11090-301	• SEAL ASSY, INNER WING FOLD LH, SEE FIG. 19	1	B11-C
	25-11090- 2	• SEAL ASSY, INNER WING FOLD RH, SEE FIG. 19	1	A-B10
	25-11090-302	• SEAL ASSY, INNER WING FOLD RH, SEE FIG. 19	1	B11-C
	25-11043- 1	• DOOR ASSEMBLY, INBOARD FUEL CELL ACCESS LH	1	
	25-11043- 2	• DOOR ASSEMBLY, INBOARD FUEL CELL ACCESS RH	1	
- 4	25-11043- 3	• • DOOR ASSEMBLY LH	1	
	25-11043- 4	• • DOOR ASSEMBLY RH	1	
		ATTACHING PARTS		
- 5	3M22RA11-5	• • SCREW (MDA)	131	
- 6	3M21RA10	• • SCREW (MDA)	28	
- 7	3M20RA11-5	• • SCREW (MDA)	2	
- 8	AN4H6A	• • BOLT, FUEL CELL FILLER NECK	12	
	AN960D416	• • WASHER	12	
		¤----¤-¤-¤----¤		
- 9	25-11025- 3	• • • FITTING, FUEL CELL DOOR FILLER NECK	1	
	25-11044- 1	• DOOR ASSEMBLY, OUTBOARD FUEL CELL ACCESS LH	1	
	25-11044- 2	• DOOR ASSEMBLY, OUTBOARD FUEL CELL ACCESS RH	1	
- 10	25-11044- 3	• • DOOR ASSEMBLY LH	1	
	25-11044- 4	• • DOOR ASSEMBLY RH	1	
		ATTACHING PARTS		
	3M22RA11-5	• • SCREW (MDA)	146	
		¤----¤-¤-¤----¤		
- 11	25-11056- 1	• PANEL ASSEMBLY, INNER WING UPPER SURFACE WHEEL WELL LH	1	
	25-11056- 2	• PANEL ASSEMBLY, INNER WING UPPER SURFACE WHEEL WELL RH	1	
- 12	25-11120- 1	• PANEL ASSEMBLY, INNER WING UPPER SURFACE LH	1	
	25-11120- 2	• PANEL ASSEMBLY, INNER WING UPPER SURFACE RH	1	
- 13	25-11091- 1	• DOOR ASSEMBLY, HOIST	1	
- 14	3F5-140-3	• • STUD (MKL) USE WITH 99833P.130 RECP (MKL)	1	
	295018	• • WASHER, SPLIT (MKL)	1	
	99836	• • PIN, CROSS (MKL)	1	
- 15	25-11115- 3	• BUSHING, HOIST SLING CONNECTION	1	
	1452-126	• NUT (EN) HOIST SLING	1	
	98533	• RETAINER (EN) HOIST SLING NUT	1	
- 16	25-11017- 3	• BUSHING, REAR SPAR TO FUS ATTACHMENT FITTING	2	
	25-58181- 3	• CLIP, WING TANK SUPPORT	2	
- 17	25-11038- 5	• ANGLE, WING TO FUSELAGE UPPER MATCH LH	1	
	25-11038- 6	• ANGLE, WING TO FUSELAGE UPPER MATCH RH	1	
- 18	25-11039- 1	• ANGLE ASSEMBLY, WING TO FUS LOWER MATCH LH	1	
	25-11039- 2	• ANGLE ASSEMBLY, WING TO FUS LOWER MATCH RH	1	
- 19	25-11018- 3	• ANGLE, MAIN LANDING GEAR DOOR HINGE MATCH LH	1	
	25-11018- 4	• ANGLE, MAIN LANDING GEAR DOOR HINGE MATCH RH	1	
- 20	25-11067- 1	• DOOR ASSY, INNER WING AFT STORE SUPPORT, FOR FUTURE PROCUREMENT USE 25-11067-301	1	A-B
	25-11067-301	• DOOR ASSY, INNER WING AFT STORE SUPPORT, USE FOR FUTURE PROCUREMENT TO REPLACE 25-11067-1	1	
- 21	25-11067- 3	• DOOR ASSY, INNER WING AFT STORE SUPPORT, FOR FUTURE PROCUREMENT USE 25-11067-303	1	A-B
	25-11067-303	• DOOR ASSY, INNER WING AFT STORE SUPPORT, USE FOR FUTURE PROCUREMENT TO REPLACE 25-11067-3	1	
- 22	25-11067- 5	• DOOR ASSY, INNER WING AFT STORE SUPPORT, FOR FUTURE PROCUREMENT USE 25-11067-305	1	A-B
	25-11067-305	• DOOR ASSY, INNER WING AFT STORE SUPPORT, USE FOR FUTURE PROCUREMENT TO REPLACE 25-11067-5	1	
- 23	25-11058- 1	• PANEL ASSEMBLY, INNER WING LOWER SURFACE FUEL BAY LH	1	
	25-11058- 2	• PANEL ASSEMBLY, INNER WING LOWER SURFACE FUEL BAY RH	1	
- 24	GRA312-10H32	• • FLANGE (NEUS) ALTERNATE 312-10H32 (NEUS)	3	
		ATTACHING PARTS		
- 25	AN509-10R4	• • SCREW	12	
		¤----¤-¤-¤----¤		

Inner Wing

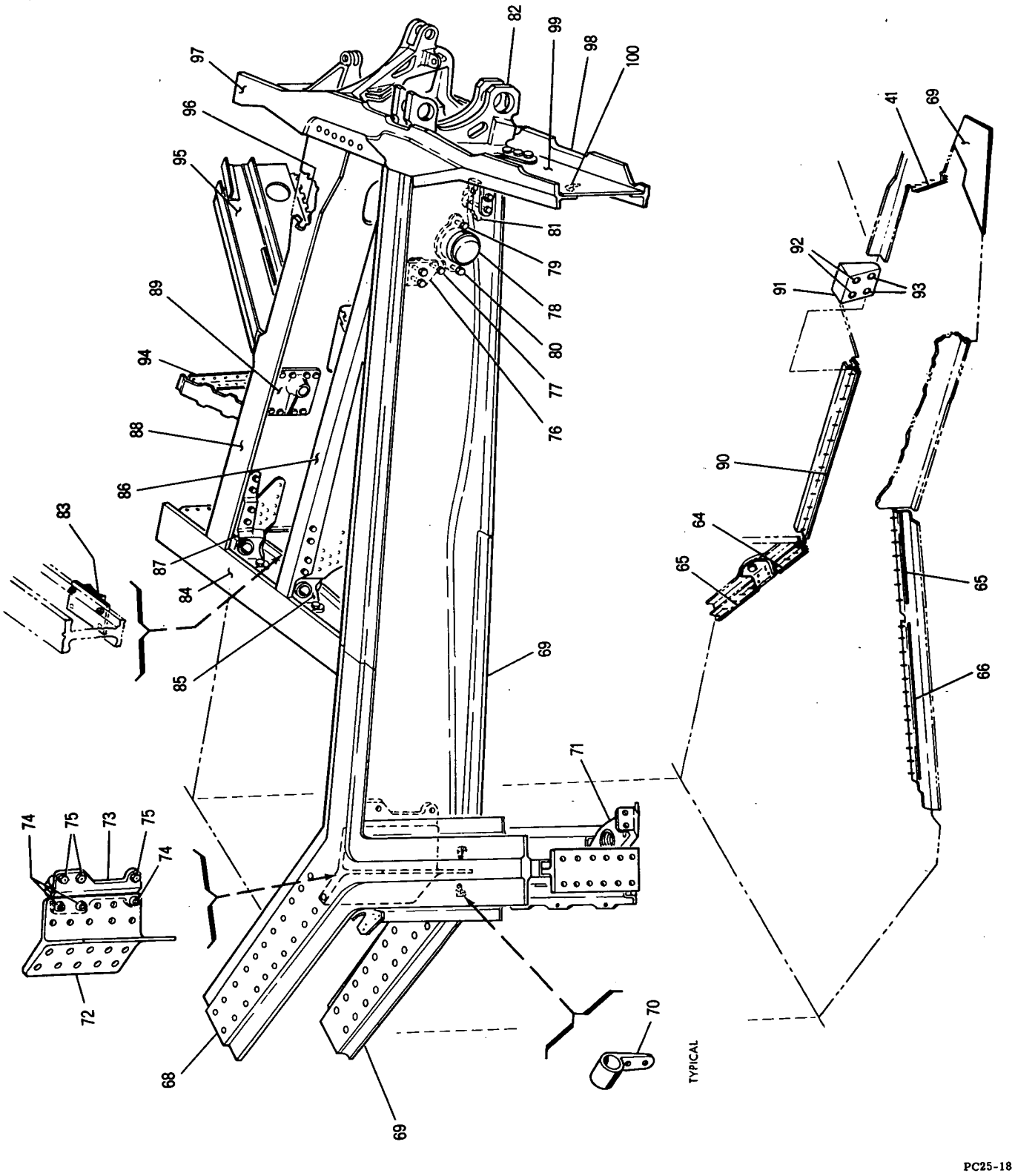

Figure 18 -- Inner Structural Wing Assembly (Sheet 2 of 3)

FIGURE & INDEX NUMBER	PART NUMBER	1 2 3 4 5 6 7 DESCRIPTION	UNITS PER ASS'Y	USABLE ON CODE
18 - 26	25-58153- 3	• • GASKET, WING FUEL TANK GAGING UNIT	3	
- 27	GRA725-16H32	• • FLANGE (NEUS)	1	
		ATTACHING PARTS		
	AN509-10R4	• • SCREW	4	
		¤----¤-¤-¤----¤		
- 28	25-58076- 7	• • GASKET, FUEL SYSTEM	1	
	25-58072- 1	• • TUBE ASSY, WING BOOST PUMP DRAIN	1	
	25-11057- 1	• PANEL ASSY, MAIN LANDING GEAR REMOVABLE LH	1	
	25-11057- 2	• PANEL ASSY, MAIN LANDING GEAR REMOVABLE RH	1	
- 29	25-11057- 59	• • DOOR ASSY, MAIN LANDING GEAR REMOVABLE LH	1	
	25-11057- 60	• • DOOR ASSY, MAIN LANDING GEAR REMOVABLE RH	1	
		ATTACHING PARTS		
- 30	AN509-10R19	• • SCREW	5	
- 31	AN509-416R15	• • SCREW	5	
- 32	3M22RA14-5	• • SCREW (MDA)	4	
- 33	AN509-516R24	• • SCREW	1	
- 34	AN509-516R23	• • SCREW	1	
	AN960D516	• • WASHER	1	
	AN365-524	• • NUT	1	
- 35	AN509-10R8	• • SCREW	5	
- 36	AN509-10R22	• • SCREW	2	
- 37	AN509-10R10	• • SCREW	6	
- 38	AN509-10R8	• • SCREW	1	
- 39	NAS229-12	• • SCREW	3	
- 40	NAS229-14	• • SCREW	2	
		¤----¤-¤-¤----¤		
- 41	25-11057- 17	• • • SEAL, SELECTED FROM 9M79B (MDA)	1	
- 42	25-11143- 3	• • CAP, MAIN LG TRUNNION ACCESS PANEL LH	1	
	25-11143- 4	• • CAP, MAIN LG TRUNNION ACCESS PANEL RH	1	
		ATTACHING PARTS		
- 43	NAS230-16	• • SCREW	6	
- 44	AN4-13A	• • BOLT	2	
	AN960D416	• • WASHER	2	
- 45	AN3-7A	• • BOLT	6	
	AN960D10	• • WASHER	6	
		¤----¤-¤-¤----¤		
- 46	25-11002-101	• DOOR LH	1	A
	25-11002-102	• DOOR RH	1	A
		ATTACHING PARTS		
	AN509-10R11	• SCREW	30	
		¤----¤-¤-¤----¤		
- 47	25-11002- 99	• DOOR LH	1	A
	25-11002-100	• DOOR RH	1	A
		ATTACHING PARTS		
	AN509-10R12	• SCREW	26	
		¤----¤-¤-¤----¤		
- 48	25-11002-135	• DOOR ASSEMBLY	1	B
	25-11002-136	• DOOR ASSEMBLY	1	B
	25-11002-167	• DOOR ASSEMBLY	1	C
		ATTACHING PARTS		
	AN509-10R15	• SCREW	72	
- 49	AN509-416R16	• SCREW	2	
- 50	AN509-416R17	• SCREW	1	
		¤----¤-¤-¤----¤		
- 51	25-11199- 1	• DOOR ASSY, TIE DOWN RING ACCESS	1	
		ATTACHING PARTS		
	AN509-10R10	• SCREW	3	
		¤----¤-¤-¤----¤		
	AN253-5-287	• • PIN, HINGE	1	
- 52	25-11199- 9	• • HINGE, HALF, ALTERED FROM 9M85HX2A300 (MDA)	1	
	25-11199- 7	• • HINGE, HALF, ALTERED FROM 9M85HY2A300 (MDA)	1	
- 53	H5000-2-102-132	• • LATCH ASSY (HWL)	1	
- 54	25-11198- 3	• RING, AIRCRAFT WING TIE DOWN	1	
		ATTACHING PARTS		
- 55	NAS464-8A65	• BOLT	1	
	AN960D816	• WASHER	3	
	AN960D816L	• WASHER	5	
	AN364-820	• NUT	1	
		¤----¤-¤-¤----¤		
- 56	25-11204- 3	• SPRING, TIE DOWN RING ACCESS DOOR	1	
	25-11200- 1	• SUPPORT ASSY, WING TIE DOWN RING LH	1	A-B13
	25-11200-301	• SUPPORT ASSY, WING TIE DOWN RING LH	1	B14-F
	25-11200- 2	• SUPPORT ASSY, WING TIE DOWN RING RH	1	A-B13
	25-11200-302	• SUPPORT ASSY, WING TIE DOWN RING RH	1	B14-F

Inner Wing

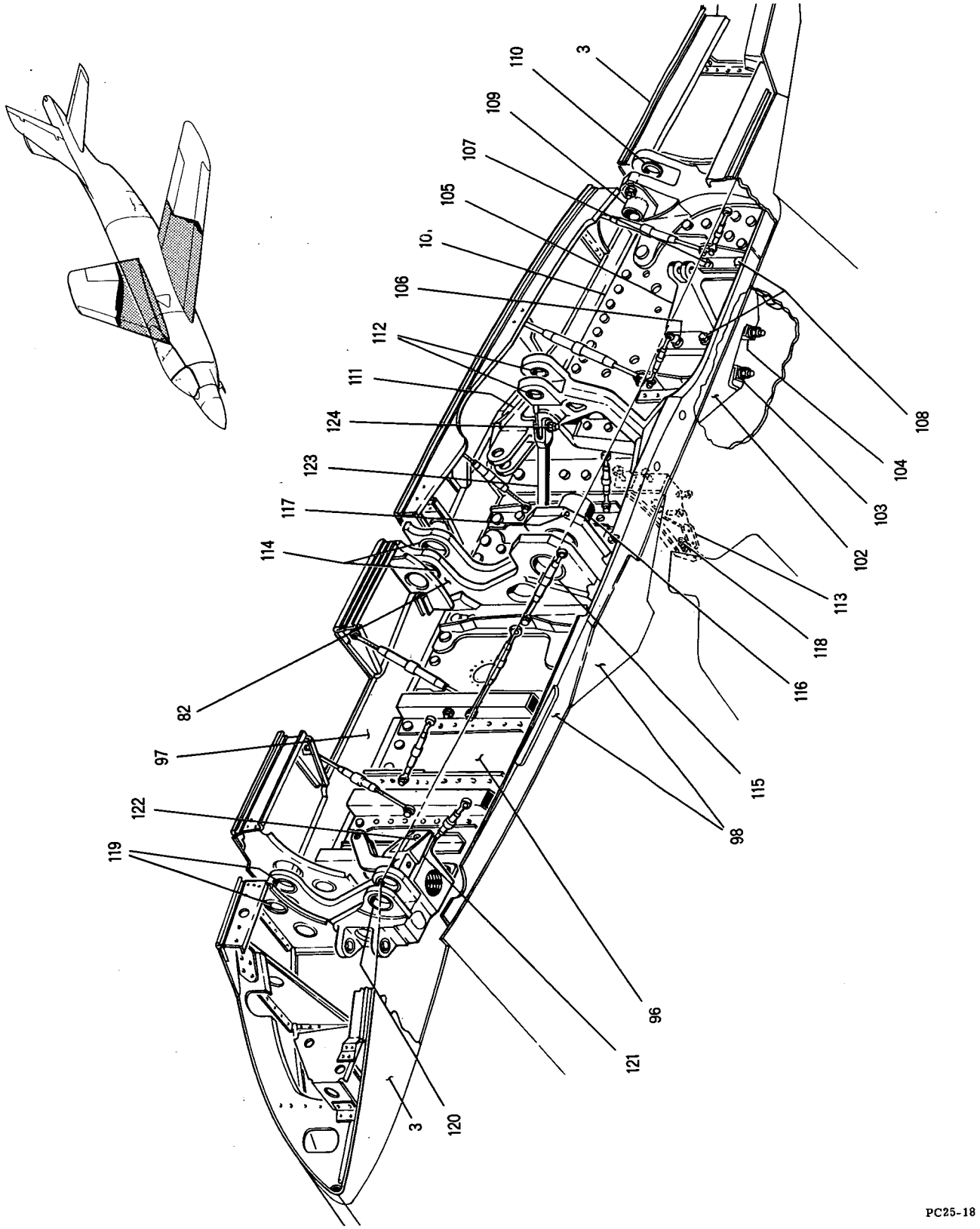

Figure 18 -- Inner Structural Wing Assembly (Sheet 3 of 3)

FIGURE & INDEX NUMBER	PART NUMBER	1 2 3 4 5 6 7 DESCRIPTION	UNITS PER ASS'Y	USABLE ON CODE
18 - 57	25-11202- 4	• • FITTING, WING TIE DOWN RING SUPPORT, LEFT SIDE	1	
	25-11202- 3	• • FITTING, WING TIE DOWN RING SUPPORT, RIGHT SIDE	1	
- 58	25-11201- 3	• • SPRING, TIE DOWN RING RETAINING	1	
- 59	25-11200- 43	• • PLATE	1	
		ATTACHING PARTS		
- 60	AN509-10R14	• • SCREW	2	
	AN960D10L	• • WASHER	2	
	AN960D10	• • WASHER	2	
	AN364-1032	• • NUT	2	
		¤----¤-¤-¤----¤		
- 61	25-11200- 41	• • SHIM	AR	
- 62	25-11200- 47	• • BUMPER LH	1	
	~~25-11200- 48~~	• • BUMPER RH	1	
		ATTACHING PARTS		
- 63	AN509-10R18	• • SCREW	2	
	AN960D10L	• • WASHER	2	
	AN960D10	• • WASHER	2	
	AN364-1032	• • NUT	2	
		¤----¤-¤-¤----¤		
- 64	25-11002- 37	• SKIN, LOWER SURFACE LH	1	
	25-11002- 38	• SKIN, LOWER SURFACE RH	1	
	25-11070- 1	• FORMER ASSY, LANDING GEAR DOOR JAMB FWD LH	1	
	25-11070- 2	• FORMER ASSY, LANDING GEAR DOOR JAMB FWD RH	1	
- 65	25-11070- 9	• • SEAL, SELECTED FROM 9M78B (MDA)	1	
- 66	25-11070- 11	• • SEAL, SELECTED FROM 9M78B (MDA)	1	
- 67	25-11002- 39	• SKIN, LOWER SURFACE LH	1	
	25-11002- 40	• SKIN, LOWER SURFACE RH	1	
	25-11022- 1	• RIB ASSY, WING FUSELAGE SPLICE LH	1	A-B
	25-11022-301	• RIB ASSY, WING FUSELAGE SPLICE LH	1	C-F
	25-11022- 2	• RIB ASSY, WING FUSELAGE SPLICE RH	1	A-B
	25-11022-302	• RIB ASSY, WING FUSELAGE SPLICE RH	1	C-F
- 68	25-11092- 3	• • CAP, WING TO FUSELAGE UPPER SPLICE LH	1	
	25-11092- 4	• • CAP, WING TO FUSELAGE UPPER SPLICE RH	1	
- 69	25-11093- 3	• • CAP, WING TO FUSELAGE LOWER SPLICE LH	1	
	25-11093- 4	• • CAP, WING TO FUSELAGE LOWER SPLICE RH	1	
- 70	25-58181- 3	• • CLIP, WING TANK SUPPORT	6	
	25-11149- 1	• SUPPORT ASSY, TANK LH	1	
	25-11149- 2	• SUPPORT ASSY, TANK RH	1	
	25-58181- 3	• • CLIP, WING TANK SUPPORT	4	
- 71	25-11105- 1	• FITTING ASSY, AFT STORES SUPPORT CENTER LH	1	
	25-11105- 2	• FITTING ASSY, AFT STORES SUPPORT CENTER RH	1	
	25-11140- 5	• • INSERT, STORE SUPPORT	1	
	52-022-094-0500	• • PIN, ROLL (EN)	1	
- 72	25-11097- 3	• SPLICE, MAIN SPAR TO FUSELAGE SHEAR LH	1	
	25-11097- 4	• SPLICE, MAIN SPAR TO FUSELAGE SHEAR RH	1	
	25-11008- 1	• SPAR ASSY, MAIN LH	1	
	25-11008- 2	• SPAR ASSY, MAIN RH	1	
- 73	25-11181- 1	• • FITTING ASSY, MAIN LG INBOARD DOOR ACTUATOR SUPPORT LH	1	
	25-11181- 2	• • FITTING ASSY, MAIN LG INBOARD DOOR ACTUATOR SUPPORT RH	1	
		ATTACHING PARTS		
- 74	NAS147-26	• • BOLT	3	
	NAS143-7C	• • WASHER	3	
	NAS143-7	• • WASHER	6	
	AN365-720	• • NUT	3	
- 75	AN5-12A	• • BOLT	3	
	AN960D516L	• • WASHER	6	
	AN960D516	• • WASHER	3	
	AN365-524	• • NUT	3	
		¤----¤-¤-¤----¤		
	BSSR4000G	• • • BEARING (SWPC)	1	
	25-58181- 3	• • CLIP, WING TANK SUPPORT	5	
- 76	25-41010- 1	• • BRACKET ASSY, MAIN LG TWISTER PUSH PULL ROD LH	1	
	25-41010- 2	• • BRACKET ASSY, MAIN LG TWISTER PUSH PULL ROD RH	1	
		ATTACHING PARTS		
- 77	AN4-16A	• • BOLT	3	
	AN960D416L	• • WASHER	3	
	AN960D416	• • WASHER	3	
	AN365-428	• • NUT	3	
		¤----¤-¤-¤----¤		
	52-040-187-1375	• • • PIN, ROLL (EN)	1	

FIGURE & INDEX NUMBER	PART NUMBER	1 2 3 4 5 6 7 DESCRIPTION	UNITS PER ASS'Y	USABLE ON CODE
18 - 78	25-41402- 1	• • FITTING ASSY, MAIN LG FWD TRUNNION BEARING	1	
		ATTACHING PARTS		
- 79	AN6-21A	• • BOLT	1	A-C8
	AN6-16A	• • BOLT	1	C9-F
	25-11059- 3	• • WASHER, MAIN LG TRUNNION BOLT SPECIAL	1	A-C8
	25-11054- 5	• • SPACER, LG TRUNION BOLT RETAINER	1	A-C8
	AN960-616	• • WASHER	2	
	AN365-624	• • NUT	1	
- 80	AN6-16A	• • BOLT	1	
	AN960-616L	• • WASHER	1	
	AN960-616	• • WASHER	2	
	AN365-624	• • NUT	1	
		¤----¤-¤-¤----¤		
	RR256C	• • • RING, RETAINING (RMS)	1	
	HSSB30-1	• • • BEARING (HLF)	1	
	25-41266- 5	• • • CAP, MAIN LG FWD TRUNNION BEARING	1	
		FITTING		
	AN944-101	• • • FITTING, LUB	1	
- 81	25-11133- 3	• • FITTING, LG STRUT DOOR HINGE FWD LH	1	A-B
	25-11133- 5	• • FITTING, LG STRUT DOOR HINGE FWD LH	1	C-F
	25-11133- 4	• • FITTING, LG STRUT DOOR HINGE FWD RH	1	A-B
	25-11133- 6	• • FITTING, LG STRUT DOOR HINGE FWD RH	1	C-F
- 82	25-11014- 1	• • FITTING ASSY, INNER WING MAIN SPAR HINGE LH	1	
	25-11014- 2	• • FITTING ASSY, INNER WING MAIN SPAR HINGE RH	1	
	25-11031- 1	• RIB ASSY, LANDING GEAR SIDE BRACE LH	1	A
	25-11031-301	• RIB ASSY, LANDING GEAR SIDE BRACE LH	1	B-F
	25-11031- 2	• RIB ASSY, LANDING GEAR SIDE BRACE RH	1	A
	25-11031-302	• RIB ASSY, LANDING GEAR SIDE BRACE RH	1	B-F
- 83	25-41016- 5	• • BUMPER, MAIN STRUT SIDE BRACE RIB	1	
		ATTACHING PARTS		
	AN3-14A	• • BOLT	4	
	AN960D10L	• • WASHER	4	
	25-11031- 25	• • SHIM	AR	
	AN960D10	• • WASHER	8	
	AN365-1032	• • NUT	4	
		¤----¤-¤-¤----¤		
- 84	25-11026- 3	• • BEAM, LANDING GEAR SIDE BRACE RIB LH	1	
	25-11026- 4	• • BEAM, LANDING GEAR SIDE BRACE RIB RH	1	
	25-11048- 1	• BEAM ASSY, LANDING GEAR FWD LH	1	
	25-11048- 2	• BEAM ASSY, LANDING GEAR FWD RH	1	
- 85	25-11047- 1	• • FITTING ASSY, SIDE BRACE RIB TO FWD BEAM LH	1	
	25-11047- 2	• • FITTING ASSY, SIDE BRACE RIB TO FWD BEAM RH	1	
	25-11019- 3	• • • BUSHING, LG SIDE BRACE SUPPORT FITTING	2	
	NAS497	• • • FITTING, LUB	1	
- 86	25-11117- 3	• • CAP, FWD LANDING GEAR BEAM UPPER LH	1	
	25-11117- 4	• • CAP, FWD LANDING GEAR BEAM UPPER RH	1	
	25-11049- 1	• BEAM ASSY, LANDING GEAR AFT LH	1	A
	25-11049-301	• BEAM ASSY, LANDING GEAR AFT LH	1	B-F
	25-11049- 2	• BEAM ASSY, LANDING GEAR AFT RH	1	A
	25-11049-302	• BEAM ASSY, LANDING GEAR AFT RH	1	B-F
- 87	25-11046- 1	• • FITTING ASSY, SIDE BRACE RIB TO AFT BEAM LH	1	
	25-11046- 2	• • FITTING ASSY, SIDE BRACE RIB TO AFT BEAM RH	1	
	25-11019- 3	• • • BUSHING, LG SIDE BRACE SUPPORT FITTING	2	
	NAS497	• • • FITTING, LUB	1	
- 88	25-11118- 3	• • CAP, LANDING GEAR AFT BEAM UPPER LH	1	
	25-11118- 4	• • CAP, LANDING GEAR AFT BEAM UPPER RH	1	
- 89	25-11095- 1	• • FITTING, LANDING GEAR ACTUATOR SUPPORT	1	
	4M34-12-119	• • • BUSHING (MDA)	1	
- 90	25-11049- 33	• • SEAL, SELECTED FROM 9M78B (MDA)	1	
- 91	25-42172- 3	• • GUIDE, MAIN STRUT DOOR OUTBOARD	1	
		ATTACHING PARTS		
- 92	AN3-15A	• • BOLT	2	
	AN960D10	• • WASHER	2	
- 93	AN4-13A	• • BOLT	2	
	AN960D416	• • WASHER	2	
		¤----¤-¤-¤----¤		
- 94	25-11073- 1	• RIB ASSY, WING STATION 66.00 CANTED LH	1	A
	25-11073-301	• RIB ASSY, WING STATION 66.00 CANTED LH	1	B-F
	25-11073- 2	• RIB ASSY, WING STATION 66.00 CANTED RH	1	A
	25-11073-302	• RIB ASSY, WING STATION 66.00 CANTED RH	1	B-F
- 95	25-11034- 1	• RIB ASSY, DRAG LINK CLOSURE LH	1	A
	25-11034-301	• RIB ASSY, DRAG LINK CLOSURE LH	1	B-F
	25-11034- 2	• RIB ASSY, DRAG LINK CLOSURE RH	1	A
	25-11034-302	• RIB ASSY, DRAG LINK CLOSURE RH	1	B-F
- 96	25-11034- 25	• • HINGE, HALF LH, ALTERED FROM GOVERNMENT STANDARD PART NUMBER MS20001PH6-1888	1	A
	25-11034- 35	• • HINGE, HALF LH, ALTERED FROM GOVERNMENT STANDARD PART NUMBER MS20001PH6-1888	1	B-F

FIGURE & INDEX NUMBER	PART NUMBER	1 2 3 4 5 6 7 DESCRIPTION	UNITS PER ASS'Y	USABLE ON CODE
18 -	25-11034- 26	• • HINGE, HALF RH, ALTERED FROM GOVERNMENT STANDARD PART NUMBER MS20001PH6-1888	1	A
	25-11034- 36	• • HINGE, HALF RH, ALTERED FROM GOVERNMENT STANDARD PART NUMBER MS20001PH6-1888	1	B-F
- 97	25-11023- 3	• CAP, MAIN LANDING GEAR RIB UPPER LH	1	
	25-11023- 4	• CAP, MAIN LANDING GEAR RIB UPPER RH	1	
- 98	25-11024- 3	• CAP, MAIN LANDING GEAR RIB LOWER LH	1	A
	25-11024- 5	• CAP, MAIN LANDING GEAR RIB LOWER LH	1	B-C
	25-11024- 4	• CAP, MAIN LANDING GEAR RIB LOWER RH	1	A
	25-11024- 6	• CAP, MAIN LANDING GEAR RIB LOWER RH	1	B-C
- 99	25-11027- 1	• RIB ASSY, LANDING GEAR INTERMEDIATE LH	1	
	25-11027- 2	• RIB ASSY, LANDING GEAR INTERMEDIATE RH	1	
-100	25-58181- 3	• • CLIP, WING TANK SUPPORT	2	
-101	25-11028- 1	• RIB ASSY, LANDING GEAR AFT LH	1	A
	25-11028-301	• RIB ASSY, LANDING GEAR AFT LH	1	B-C
	25-11028- 2	• RIB ASSY, LANDING GEAR AFT RH	1	A
	25-11028-302	• RIB ASSY, LANDING GEAR AFT RH	1	B-C
-102	25-11066- 3	• • BEAM, LANDING GEAR TRUNNION DRAG LH	1	
	25-11066- 4	• • BEAM, LANDING GEAR TRUNNION DRAG RH	1	
-103	25-11182- 3	• • FITTING, LANDING GEAR DRAG BEAM FWD	1	
		ATTACHING PARTS		
	AN3-25A	• • BOLT	1	
	AN960D10	• • WASHER	3	
	AN365-1032	• • NUT	1	
		¤----¤-¤-¤----¤		
-104	25-11062- 3	• • FITTING, LANDING GEAR DRAG BEAM	1	
		ATTACHING PARTS		
	AN3-24A	• • BOLT	1	
	AN960D10L	• • WASHER	1	
	AN960D10	• • WASHER	1	
	AN365-1032	• • NUT	1	
		¤----¤-¤-¤----¤		
-105	25-11137- 5	• • FITTING, PIN PULL MECH ACTUATOR SUPPORT LH	1	
	25-11137- 6	• • FITTING, PIN PULL MECH ACTUATOR SUPPORT RH	1	
		ATTACHING PARTS		
-106	AN5-13A	• • BOLT	1	
	AN960D516L	• • WASHER	1	
	AN960D516	• • WASHER	1	
	AN365-524	• • NUT	1	
-107	AN6-14A	• • BOLT	1	
	AN960D616L	• • WASHER	1	
	AN960D616	• • WASHER	1	
	AN365-624	• • NUT	1	
-108	NAS147-29	• • BOLT	2	
	NAS143-7C	• • WASHER	2	
	AN960D716	• • WASHER	4	
	AN365-720	• • NUT	2	
		¤----¤-¤-¤----¤		
-109	25-11136- 1	• SLEEVE ASSY, REAR SPAR WINGFOLD GUIDE PIN	1	
		ATTACHING PARTS		
	AN509-516R21	• SCREW	2	
	AN960D516	• WASHER	4	
	AN365-524	• NUT	2	
		¤----¤-¤-¤----¤		
-110	25-15045- 7	• BUSHING, WING FOLD AFT FITTING	1	
-111	25-11065- 1	• FITTING ASSY, WING FOLD ATTACHMENT INBD LH, FOR FUTURE PROCUREMENT USE 25-11065-301	1	A
	25-11065-301	• FITTING ASSY, WING FOLD ATTACHMENT INBD LH, USE FOR FUTURE PROCUREMENT TO REPLACE 25-11065-1	1	
	25-11065- 2	• FITTING ASSY, WING FOLD ATTACHMENT INBD RH, FOR FUTURE PROCUREMENT USE 25-11065-302	1	A
	25-11065-302	• FITTING ASSY, WING FOLD ATTACHMENT INBD RH, USE FOR FUTURE PROCUREMENT TO REPLACE 25-11065-2	1	
-112	4M33-8-018	• • BUSHING (MDA)	2	
-113	25-11094- 3	• FITTING, LANDING GEAR STRUT DOOR HINGE LH	1	
	25-11094- 4	• FITTING, LANDING GEAR STRUT DOOR HINGE RH	1	
-114	25-11122- 3	• BUSHING, INNER WING MAIN SPAR UPPER HINGE	2	
-115	25-11121- 3	• BUSHING, LOWER MAIN SPAR WING FOLD	1	
-116	25-11145- 1	• SLEEVE ASSY, MAIN SPAR WING FOLD HINGE PIN	1	
		ATTACHING PARTS		
-117	AN509-416R21	• SCREW	2	
	AN960D416	• WASHER	2	
	AN365-428	• NUT	2	
		¤----¤-¤-¤----¤		

FIGURE & INDEX NUMBER	PART NUMBER	1 2 3 4 5 6 7 DESCRIPTION	UNITS PER ASS'LY	USABLE ON CODE
18 -118	25-11271- 1	• RETAINER ASSY, LANDING GEAR STRUT DOOR HINGE BOLT LH	1	
	25-11271- 2	• RETAINER ASSY, LANDING GEAR STRUT DOOR HINGE BOLT RH	1	
		ATTACHING PARTS		
	AN4-5A	• BOLT	1	
	AN960-416	• WASHER	1	
	AN365-428	• NUT	1	
		¤----¤-¤-¤----¤		
-119	25-11099- 3	• BUSHING, FRONT SPAR HINGE FITTING UPPER	2	
-120	25-11100- 3	• BUSHING, FRONT SPAR HINGE FITTING FLANGED	1	
-121	25-11144- 1	• SLEEVE ASSY, FRONT SPAR WING FOLD HINGE PIN LH	1	
	25-11144- 2	• SLEEVE ASSY, FRONT SPAR WING FOLD HINGE PIN RH	1	
		ATTACHING PARTS		
-122	AN509-616R20	• SCREW	1	
	AN960D616	• WASHER	2	
	25-11002-125	• SHIM	1	
	AN365-624	• NUT	1	
		¤----¤-¤-¤----¤		
	25-11172- 1	• BOX ASSY, INNER WING OUTBOARD SLAT TRACK LH	1	
	25-11172- 2	• BOX ASSY, INNER WING OUTBOARD SLAT TRACK RH	1	
	25-58181- 3	• • CLIP, WING TANK SUPPORT	3	
-123	25-11051- 3	• LINK, WING FOLD SIDE BRACE	1	
		ATTACHING PARTS		
-124	AN4-10A	• BOLT, AFT	1	
	AN960D416L	• WASHER	1	
	AN960D416	• WASHER	1	
	AN364-428	• NUT	1	
	AN4-10A	• BOLT, FORWARD	1	
	AN960D416L	• WASHER	1	
	AN960D416	• WASHER	2	
	AN364-428	• NUT	1	
		¤----¤-¤-¤----¤		

FIGURE & INDEX NUMBER	PART NUMBER	1 2 3 4 5 6 7 DESCRIPTION	UNITS PER ASS'Y	USABLE ON CODE
19 -	25-11090- 1	SEAL ASSY, INNER WING FOLD LH, SEE FIG. 18-3 FOR NEXT HIGHER ASSY	REF	A-B10
	25-11090-301	SEAL ASSY, INNER WING FOLD LH, SEE FIG. 18-3 FOR NEXT HIGHER ASSY	REF	B11-C
	25-11090- 2	SEAL ASSY, INNER WING FOLD RH, SEE FIG. 18-3 FOR NEXT HIGHER ASSY	REF	A-B10
	25-11090-302	SEAL ASSY, INNER WING FOLD RH, SEE FIG. 18-4 FOR NEXT HIGHER ASSY	REF	B11-C
- 1	25-11090-175	. SEAL, SELECTED FROM 9M55A (MDA)	1	
- 2	25-11090-165	. SEAL, SELECTED FROM 9M55A (MDA)	1	
- 3	25-11090-167	. SEAL, SELECTED FROM 9M55A (MDA)	1	
- 4	25-11090-173	. SEAL, SELECTED FROM 9M55A (MDA)	1	
- 5	25-11090-439	. SEAL, SELECTED FROM 9M55A (MDA)	1	
- 6	25-11090-171	. SEAL, SELECTED FROM 9M55A (MDA)	1	A-B10
	25-11090-435	. SEAL, SELECTED FROM 9M55A (MDA)	1	B11-C
- 7	25-11090-169	. SEAL, SELECTED FROM 9M55A (MDA)	1	A-B10
	25-11090-433	. SEAL, SELECTED FROM 9M55A (MDA)	1	B11-C
- 8	25-11090-203	. SEAL, SELECTED FROM 9M55A (MDA)	1	
- 9	25-11090-205	. SEAL, SELECTED FROM 9M55A (MDA)	1	
- 10	25-11090-207	. SEAL, SELECTED FROM 9M55A (MDA)	1	
- 11	25-11090-471	. DOOR, HINGE FITTING ACCESS	1	C
		ATTACHING PARTS		
	AN509-10R7	. SCREW	1	
		¤----¤-¤-¤----¤		
	25-11274- 1	. HANDLE ASSY, PIN PULL LOCK PIN LH	1	
	25-11274- 2	. HANDLE ASSY, PIN PULL LOCK PIN RH	1	
- 12	25-11273- 1	. . DOOR, PIN PULL LOCK PIN LH	1	
	25-11273- 2	. . DOOR, PIN PULL LOCK PIN RH	1	
		ATTACHING PARTS		
- 13	AN395-35	PIN, FLAT HEAD	1	
	AN960D516L	WASHER	1	
	AN380-2-3	PIN, COTTER	1	
		¤----¤-¤-¤----¤		
- 14	25-11276- 3	. . SPRING, PIN PULL LOCK PIN DETENT EXTENSION	2	
- 15	AN3-13A	. . BOLT	1	
	AN960D10	. . WASHER	4	
	NAS43HT3-22	. . SPACER	2	
	AN365-1032	. . NUT	1	
- 16	25-11278- 3	. . ROLLER, PIN PULL LOCK PIN DETENT	1	
		ATTACHING PARTS		
- 17	AN392-11	. . PIN, FLAT HEAD	1	
	AN960D4L	. . WASHER	1	
	AN380-2-2	. . PIN, COTTER	1	
		¤----¤-¤-¤----¤		
- 18	25-11275- 3	. . BELL CRANK, PIN PULL LOCK PIN DETENT LH	1	
	25-11275- 4	. . BELL CRANK, PIN PULL LOCK PIN DETENT RH	1	
		ATTACHING PARTS		
- 19	AN393-13	. . PIN, FLAT HEAD	1	
	AN960D10	. . WASHER	1	
	AN380-2-2	. . PIN, COTTER	1	
		¤----¤-¤-¤----¤		
- 20	25-11281- 3	. . CLIP, PIN PULL LOCK PIN DETENT SPRING LH	1	
	25-11281- 4	. . CLIP, PIN PULL LOCK PIN DETENT SPRING RH	1	
- 21	25-11277- 3	. . SUPPORT, PIN PULL LOCK PIN DETENT LH	1	
	25-11277- 4	. . SUPPORT, PIN PULL LOCK PIN DETENT RH	1	
		ATTACHING PARTS		
- 22	AN509-10R20	. . SCREW	3	
	AN960D10L	. . WASHER	3	
	AN365-1032	. . NUT	3	
		¤----¤-¤-¤----¤		
- 23	25-11279- 3	. . SHIM, PIN PULL LOCK PIN DETENT	AR	
- 24	25-11282- 1	. . DOOR ASSY, PIN PULL HANDLE ACCESS LH	1	
	25-11282- 2	. . DOOR ASSY, PIN PULL HANDLE ACCESS RH	1	
		ATTACHING PARTS		
- 25	AN393-7	. . PIN, FLAT HEAD	1	
	AN960D10L	. . WASHER	2	
	AN380-2-2	. . PIN, COTTER	1	
		¤----¤-¤-¤----¤		
- 26	25-11282- 7	. . . HINGE, HALF LH, ALTERED FROM GOVERNMENT STANDARD PART NO. AN257XP5-250	1	
	25-11282- 8	. . . HINGE, HALF RH, ALTERED FROM GOVERNMENT STANDARD PART NO. AN257XP5-250	1	

Inner Wing

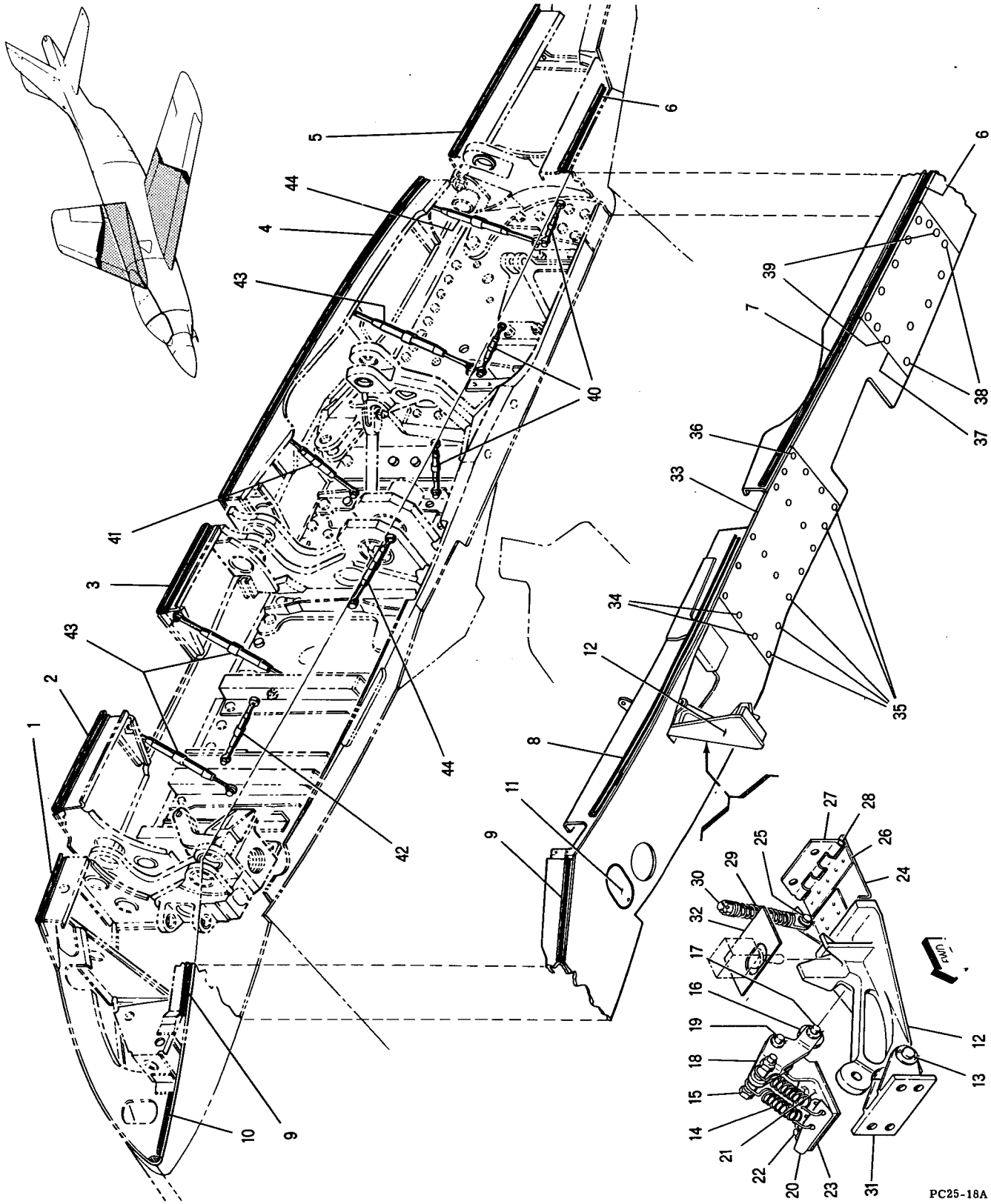

Figure 19 -- Inner Wing Fold Seal Assembly

FIGURE & INDEX NUMBER	PART NUMBER	1 2 3 4 5 6 7 DESCRIPTION	UNITS PER ASS'Y	USABLE ON CODE
19 - 27	25-11282- 9	• • • HINGE, HALF LH, ALTERED FROM GOVERNMENT STANDARD PART NO. AN257YP5-250	1	
	25-11282- 10	• • • HINGE, HALF RH, ALTERED FROM GOVERNMENT STANDARD PART NO. AN257YP5-250	1	
- 28	AN253-2-200	• • • PIN, HINGE	1	
- 29	25-11280- 3	• • SPRING, PIN PULL ACCESS DOOR COMPRESSION	1	
		ATTACHING PARTS		
- 30	AN42-22	• • BOLT, EYE	1	
	AN960D10	• • WASHER	3	
	AN310-3	• • NUT	1	
	AN380-2-3	• • PIN, COTTER	1	
		¤----¤-¤-¤----¤		
- 31	25-11272- 3	• SUPPORT, PIN PULL LOCK PIN DOOR	1	
- 32	25-89093- 3	• NAMEPLATE, WING FOLD SWITCH LH	1	
	25-89093- 4	• NAMEPLATE, WING FOLD SWITCH RH	1	
- 33	25-11090-243	• DOOR, HINGE FITTING ACCESS LH	1	
	25-11090-244	• DOOR, HINGE FITTING ACCESS RH	1	
		ATTACHING PARTS		
- 34	AN509-416R12	• SCREW	2	
- 35	AN509-10R21	• SCREW	5	
- 36	AN509-10R10	• SCREW	14	
		¤----¤-¤-¤----¤		
- 37	25-11090-237	• DOOR, PIN PULL ACTUATOR SUPPORT ACCESS LH	1	
	25-11090-238	• DOOR, PIN PULL ACTUATOR SUPPORT ACCESS RH	1	
		ATTACHING PARTS		
- 38	AN509-10R15	• SCREW	5	
- 39	AN509-10R10	• SCREW	9	
		¤----¤-¤-¤----¤		
- 40	AN155-32S	• BARREL, TURNBUCKLE	3	
	AN165-32RS	• EYE, TURNBUCKLE	3	
	AN165-32LS	• EYE, TURNBUCKLE	3	
- 41	AN155-32S	• BARREL, TURNBUCKLE	1	
	AN165-32RL	• EYE, TURNBUCKLE	1	
	AN165-32LL	• EYE, TURNBUCKLE	1	
- 42	AN155-32L	• BARREL, TURNBUCKLE	1	
	AN165-32RL	• EYE, TURNBUCKLE	1	
	AN161-32LL	• FORK, TURNBUCKLE	1	
- 43	AN155-32L	• BARREL, TURNBUCKLE	3	
	AN165-32RL	• EYE, TURNBUCKLE	3	
	AN165-32LL	• EYE, TURNBUCKLE	3	
- 44	AN155-32L	• BARREL, TURNBUCKLE	2	
	AN165-32RS	• EYE, TURNBUCKLE	2	
	AN165-32LS	• EYE, TURNBUCKLE	2	

Inner Wing

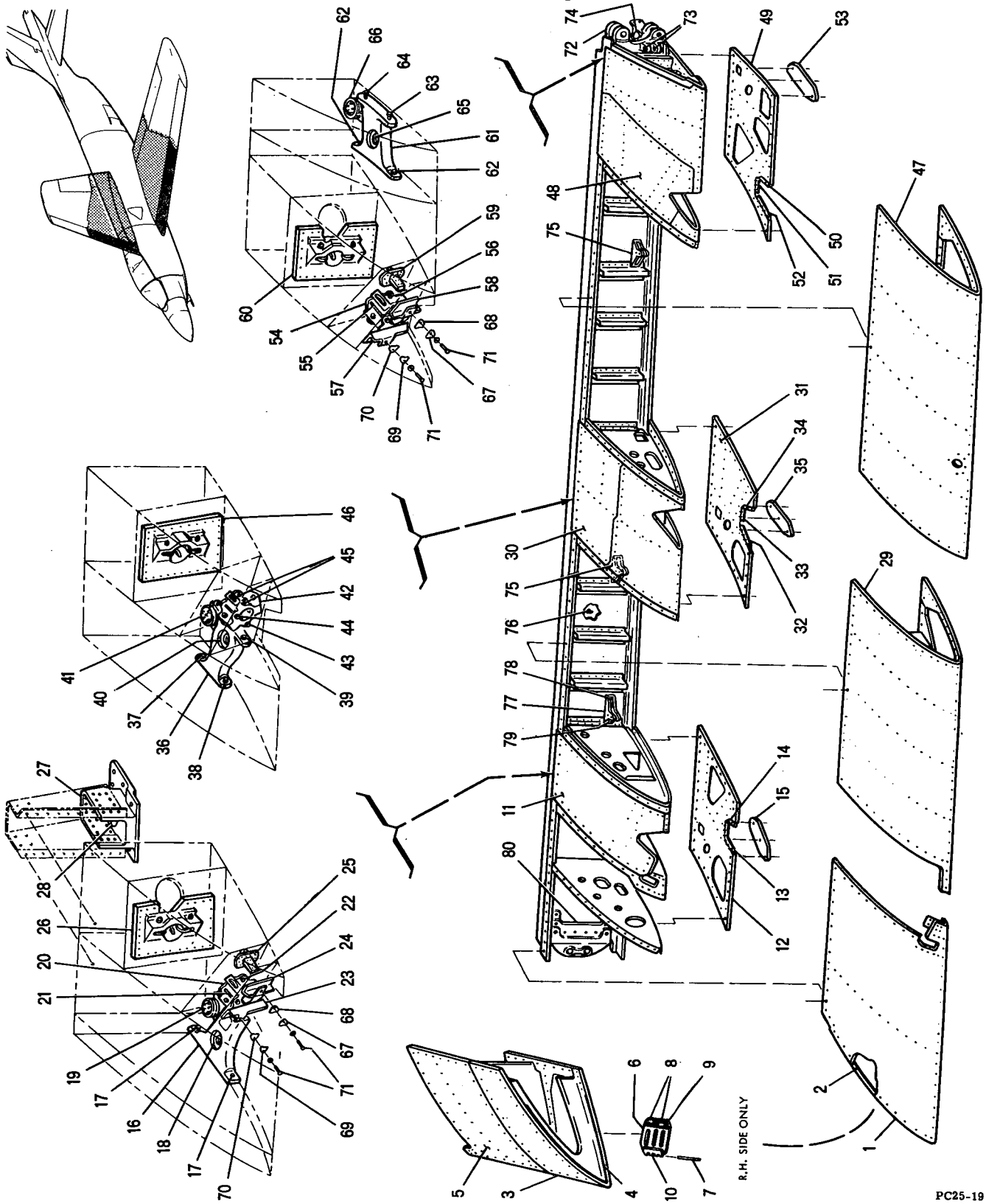

Figure 20 -- Inner Wing Leading Edge Assembly

FIGURE & INDEX NUMBER	PART NUMBER	1 2 3 4 5 6 7 DESCRIPTION	UNITS PER ASS'Y	USABLE ON CODE
20 -	25-11078- 1	LEADING EDGE ASSY, INNER WING LH, SEE FIG. 18-1 FOR NEXT HIGHER ASSY	REF	A-B
	25-11078-301	LEADING EDGE ASSY, INNER WING LH, SEE FIG. 18-1 FOR NEXT HIGHER ASSEMBLY	REF	C
	25-11078- 2	LEADING EDGE ASSY, INNER WING RH, SEE FIG. 18-1 FOR NEXT HIGHER ASSY	REF	A-B
	25-11078-302	LEADING EDGE ASSY, INNER WING RH, SEE FIG. 18-1 FOR NEXT HIGHER ASSEMBLY	REF	C
- 1	25-11078-923	. PANEL ASSY, LEFT SIDE	1	A-B
	25-11078-489	. PANEL ASSY, LEFT SIDE	1	C
		ATTACHING PARTS		
	AN509-416R14	. SCREW	32	
	AN509-10R10	. SCREW	61	
		¤----¤-¤-¤----¤		
- 2	25-11078- 75	. . SEAL, SELECTED FROM 11M600 (MDA)	1	
- 3	25-11078-175	. PANEL ASSY, RIGHT SIDE	1	
		ATTACHING PARTS		
	AN509-416R14	. SCREW	15	
	AN509-10R10	. SCREW	31	
		¤----¤-¤-¤----¤		
- 4	25-11078- 75	. . SEAL, SELECTED FROM 11M600 (MDA)	1	
- 5	25-11078-939	. DOOR ASSY, RIGHT SIDE	1	A-B
	25-11078-443	. DOOR ASSY, RIGHT SIDE	1	C
		ATTACHING PARTS		
	AN509-416R14	. SCREW	5	
	AN509-10R10	. SCREW	78	
		¤----¤-¤-¤----¤		
- 6	25-11174- 1	. DOOR ASSY, EXTERNAL POWER RIGHT SIDE	1	
		ATTACHING PARTS		
- 7	AN253-5-388	. PIN, HINGE	1	
		¤----¤-¤-¤----¤		
- 8	98265-3-.310	. . STUD (MKL) USE WITH 99947P.130 RECEPTACLE (MKL)	2	
	99836	. . PIN, CROSS (MKL)	2	
- 9	25-11174- 7	. . SEAL	1	
- 10	25-11174- 9	. . HINGE, HALF, ALTERED FROM 9M27HY3A400 (MDA)	1	
	25-11078-91	. HINGE, HALF, ALTERED FROM 9M84HX3A400 (MDA) RIGHT SIDE	1	A-B
	25-11078-1015	. HINGE, HALF, ALTERED FROM 9M84HX3A424 (MDA) RIGHT SIDE	1	C
	25-11150- 1	. SUPPORT ASSY, INNER WING INBD SLAT & STORE LH	1	
	25-11150- 2	. SUPPORT ASSY, INNER WING INBD SLAT & STORE RH	1	
- 11	25-11150-219	. . DOOR ASSEMBLY, LEFT SIDE	1	
	25-11150-221	. . DOOR ASSEMBLY, RIGHT SIDE	1	
		ATTACHING PARTS		
	AN509-10R11	. . SCREW	51	
	AN509-416R14	. . SCREW	10	
		¤----¤-¤-¤----¤		
- 12	25-11150- 9	. . DOOR, LEFT SIDE	1	
	25-11150- 99	. . DOOR, RIGHT SIDE	1	
		ATTACHING PARTS		
	AN509-10R10	. . SCREW	54	
	AN509-416R14	. . SCREW	21	
	AN509-416R14	. . SCREW, RIGHT SIDE	1	
		¤----¤-¤-¤----¤		
- 13	25-11150-103	. . SEAL LH, SELECTED FROM 9M79B (MDA)	1	
	25-11150-104	. . SEAL RH, SELECTED FROM 9M79B (MDA)	1	
- 14	25-11150-105	. . SEAL LH, SELECTED FROM 9M79B (MDA)	1	
	25-11150-106	. . SEAL RH, SELECTED FROM 9M79B (MDA)	1	
- 15	25-11150-101	. . DOOR LH	1	
	25-11150-102	. . DOOR RH	1	
		ATTACHING PARTS		
	AN509-10R10	. . SCREW	3	
		¤----¤-¤-¤----¤		
- 16	25-11109- 1	. . FITTING ASSY, INBD FWD STORE SUPPORT LH	1	A
	25-11109-301	. . FITTING ASSY, INBD FWD STORE SUPPORT LH	1	B-F
	25-11109- 2	. . FITTING ASSY, INBD FWD STORE SUPPORT RH	1	A
	25-11109-302	. . FITTING ASSY, INBD FWD STORE SUPPORT RH	1	B-F
		ATTACHING PARTS		
- 17	AN5-10A	. . BOLT, INBOARD	2	
	AN960D516L	. . WASHER	2	
	AN960D516	. . WASHER	2	
	AN364-524	. . NUT	2	

FIGURE & INDEX NUMBER	PART NUMBER	1 2 3 4 5 6 7 DESCRIPTION	UNITS PER ASS'Y	USABLE ON CODE
20 -		ATTACHING PARTS (CONT)		
	AN4-10A	• • BOLT, OUTBOARD FWD	1	
	25-11150-185	• • SHIM, INBOARD	1	
	AN960D416L	• • WASHER	1	
	AN960D416	• • WASHER	1	
	AN365-428	• • NUT	1	
	AN4-12A	• • BOLT, OUTBOARD AFT	1	
	AN960D416	• • WASHER	3	
	AN365-428	• • NUT	1	
	25-11150-183	• • SHIM, OUTBOARD	1	
		¤----¤-¤-¤----¤		
	52-022-094-0500	• • • PIN, ROLL (EN)	1	
- 18	25-11140- 3	• • • INSERT, STORE SUPPORT	1	
- 19	2182-7	• • RECEPTACLE (CED)	1	
- 20	25-19003- 1	• • CARRIAGE ASSY, INNER WING FWD SLAT TRACK ROLLER, SEE FIG. 21	1	
		ATTACHING PARTS		
	AN4-6A	• • BOLT, INBOARD AFT	1	
	AN960D416L	• • WASHER	1	
	AN960D416	• • WASHER	1	
	AN364-428	• • NUT	1	
	AN4-10A	• • BOLT, INBOARD FWD	1	
	AN960D416L	• • WASHER	1	
	AN960D416	• • WASHER	2	
	AN364-428	• • NUT	1	
- 21	AN24-48A	• • BOLT, CENTER	1	
	AN960D416L	• • WASHER	1	
	AN960D416	• • WASHER	1	
	AN364-428	• • NUT	1	
- 22	AN4-10A	• • BOLT, OUTBOARD AFT	1	
	AN960D416L	• • WASHER	1	
	AN960D416	• • WASHER	2	
	AN364-428	• • NUT	1	
	AN4-10A	• • BOLT, OUTBOARD FWD	1	
	AN960D416L	• • WASHER	1	
	AN960D416	• • WASHER	1	
	AN364-428	• • NUT	1	
		¤----¤-¤-¤----¤		
- 23	25-11193- 3	• • BUMPER ASSY, INNER WING SLAT INBD TRACK UP STOP INBD LH	1	
	25-11193- 4	• • BUMPER ASSY, INNER WING SLAT INBD TRACK UP STOP INBD RH	1	
- 24	25-11192- 5	• • BUMPER ASSY, INNER WING SLAT UP STOP OUTBD LH	1	
	25-11192- 6	• • BUMPER ASSY, INNER WING SLAT UP STOP OUTBD RH	1	
- 25	25-11166- 3	• • FITTING, INNER WING SLAT ACTUATOR SUP. LH	1	
	25-11166- 4	• • FITTING, INNER WING SLAT ACTUATOR SUP. RH	1	
- 26	25-19021- 1	• • CARRIAGE ASSY, INNER WING AFT LH, SEE FIG. 21	1	
	25-19021- 2	• • CARRIAGE ASSY, INNER WING AFT RH, SEE FIG. 21	1	
	25-11080- 1	• SUPPORT ASSY, INBOARD AFT STORE LH	1	
	25-11080- 2	• SUPPORT ASSY, INBOARD AFT STORE RH	1	
- 27	25-11103- 1	• • FITTING ASSY, BOMB SUPPORT AFT INBOARD LH	1	
	25-11103- 2	• • FITTING ASSY, BOMB SUPPORT AFT INBOARD RH	1	
	52-022-094-0500	• • • PIN, ROLL (EN)	1	
- 28	25-11140- 7	• • • INSERT, STORE SUPPORT	1	
- 29	25-11078-439	• PANEL ASSY LH	1	A-B
	25-11078-487	• PANEL ASSY LH	1	C
	25-11078-440	• PANEL ASSY RH	1	A-B
	25-11078-488	• PANEL ASSY RH	1	C
		ATTACHING PARTS		
	AN509-10R10	• SCREW	60	
	AN509-416R14	• SCREW	28	
		¤----¤-¤-¤----¤		
	25-11151- 1	• SUPPORT ASSY, CENTER SLAT & STORE LH	1	
	25-11151- 2	• SUPPORT ASSY, CENTER SLAT & STORE RH	1	
- 30	25-11151-149	• • DOOR ASSY, ACCESS LH	1	
	25-11151-150	• • DOOR ASSY, ACCESS RH	1	
		ATTACHING PARTS		
	AN509-10R11	• • SCREW	37	
	AN509-416R17	• • SCREW	14	
		¤----¤-¤-¤----¤		
- 31	25-11151- 7	• • DOOR LH	1	
	25-11151- 8	• • DOOR RH	1	
		ATTACHING PARTS		
	AN509-10R10	• • SCREW	48	
	AN509-416R14	• • SCREW	17	
		¤----¤-¤-¤----¤		

FIGURE & INDEX NUMBER	PART NUMBER	1 2 3 4 5 6 7 DESCRIPTION	UNITS PER ASS'Y	USABLE ON CODE
20 - 32	25-11151- 91	• • SEAL LH, SELECTED FROM 9M79B (MDA)	1	
	25-11151- 92	• • SEAL RH, SELECTED FROM 9M79B (MDA)	1	
- 33	25-11151- 93	• • SEAL LH, SELECTED FROM 9M79B (MDA)	1	
	25-11151- 94	• • SEAL RH, SELECTED FROM 9M79B (MDA)	1	
- 34	25-11151- 89	• • SEAL, SELECTED FROM 9M79B (MDA)	1	
- 35	25-11151- 81	• • DOOR LH	1	
	25-11151- 82	• • DOOR RH	1	
		ATTACHING PARTS		
	AN509-10R10	• • SCREW	3	
		¤----¤-¤-¤-----¤		
- 36	25-11111- 1	• • FITTING ASSY, CENTER FWD STORES SUPPORT LH	1	A
	25-11111-301	• • FITTING ASSY, CENTER FWD STORES SUPPORT LH	1	B-F
	25-11111- 2	• • FITTING ASSY, CENTER FWD STORES SUPPORT RH	1	A
	25-11111-302	• • FITTING ASSY, CENTER FWD STORES SUPPORT RH	1	B-F
		ATTACHING PARTS		
- 37	AN5-11A	• • BOLT	1	
	AN960D516L	• • WASHER	1	
	AN960D516	• • WASHER	2	
	AN365-524	• • NUT	1	
- 38	AN5-10A	• • BOLT	1	
	AN960D516L	• • WASHER	1	
	AN960D516	• • WASHER	1	
	AN365-524	• • NUT	1	
	25-11151-151	• • SHIM, LAMINATED INBOARD	1	
- 39	AN4-7A	• • BOLT	2	
	AN960D416L	• • WASHER	2	
	AN960D416	• • WASHER	2	
	AN364-428	• • NUT	2	
	25-11151-153	• • SHIM, LAMINATED OUTBOARD	1	
		¤----¤-¤-¤-----¤		
	52-022-094-0500	• • • PIN, ROLL (EN)	1	
- 40	25-11140- 3	• • • INSERT, STORE SUPPORT	1	
- 41	2182-7	• • RECEPTACLE (CED)	1	
- 42	25-19003- 3	• • CARRIAGE ASSY, INNER WING FWD SLAT TRACK ROLLER, SEE FIG. 21	1	
		ATTACHING PARTS		
- 43	AN4-7A	• • BOLT, FWD INBOARD	1	
	AN960D416L	• • WASHER	1	
	AN960D416	• • WASHER	1	
	AN364-428	• • NUT	1	
	AN4-6A	• • BOLT, AFT INBOARD	1	
	AN960D416L	• • WASHER	1	
	AN960D416	• • WASHER	1	
	AN364-428	• • NUT	1	
- 44	AN24-48A	• • BOLT, CENTER	1	
	AN960D416L	• • WASHER	1	
	AN960D416	• • WASHER	1	
	AN364-428	• • NUT	1	
- 45	AN4-6A	• • BOLT, FWD & AFT OUTBOARD	2	
	AN960D416L	• • WASHER	2	
	AN960D416	• • WASHER	2	
	AN364-428	• • NUT	2	
		¤----¤-¤-¤-----¤		
- 46	25-19021- 3	• • CARRIAGE ASSY, INNER WING AFT, SEE FIG. 21	1	
- 47	25-11078- 9	• PANEL ASSY LH	1	A-B
	25-11078-215	• PANEL ASSY LH	1	C
	25-11078- 10	• PANEL ASSY RH	1	A-B
	25-11078-216	• PANEL ASSY RH	1	C
		ATTACHING PARTS		
	AN509-10R10	• SCREW	46	
	AN509-416R14	• SCREW	40	
		¤----¤-¤-¤-----¤		
- 48	25-11078-423	• DOOR ASSY LH	1	
	25-11078-424	• DOOR ASSY RH	1	
		ATTACHING PARTS		
	AN509-10R12	• SCREW	54	
	AN509-416R14	• SCREW	7	
		¤----¤-¤-¤-----¤		
- 49	25-11078-205	• DOOR ASSY LH	1	
	25-11078-206	• DOOR ASSY RH	1	
		ATTACHING PARTS		
	AN509-10R10	• SCREW	68	
	AN509-416R14	• SCREW	21	
		¤----¤-¤-¤-----¤		

FIGURE & INDEX NUMBER	PART NUMBER	1 2 3 4 5 6 7 DESCRIPTION	UNITS PER ASS'Y	USABLE ON CODE
20 - 50	25-11078-135	• SEAL LH, SELECTED FROM 9M79B (MDA)	1	
	25-11078-136	• SEAL RH, SELECTED FROM 9M79B (MDA)	1	
- 51	25-11078-139	• SEAL LH, SELECTED FROM 9M79B (MDA)	1	
	25-11078-140	• SEAL RH, SELECTED FROM 9M79B (MDA)	1	
- 52	25-11078-137	• SEAL LH, SELECTED FROM 9M79B (MDA)	1	
	25-11078-138	• SEAL RH, SELECTED FROM 9M79B (MDA)	1	
- 53	25-11078-129	• DOOR LH	1	
	25-11078-130	• DOOR RH	1	
		ATTACHING PARTS		
	AN509-10R10	• SCREW	2	
		¤----¤-¤-¤----¤		
	25-11077- 1	• SUPPORT ASSY, OUTBOARD SLAT LH	1	
	25-11077- 2	• SUPPORT ASSY, OUTBOARD SLAT RH	1	
- 54	25-19003- 3	• • CARRIAGE ASSY, INNER WING SLAT TRACK ROLLER SEE FIG. 21	1	
		ATTACHING PARTS		
	AN4-10A	• • BOLT, FWD INBOARD	1	
	AN960D416	• • WASHER	2	
	AN364-428	• • NUT	1	
	AN4-6A	• • BOLT, AFT INBOARD	1	
	AN960D416L	• • WASHER	1	
	AN960D416	• • WASHER	1	
	AN364-428	• • NUT	1	
- 55	AN24-48A	• • BOLT, CENTER	1	
	AN960D416L	• • WASHER	1	
	AN960D416	• • WASHER	1	
	AN364-428	• • NUT	1	
	AN4-10A	• • BOLT, FWD OUTBOARD	1	
	AN960D416	• • WASHER	2	
	AN364-428	• • NUT	1	
- 56	AN4-10A	• • BOLT, AFT OUTBOARD	1	
	AN960D416L	• • WASHER	1	
	AN960D416	• • WASHER	1	
	AN364-428	• • NUT	1	
		¤----¤-¤-¤----¤		
- 57	25-11194- 3	• • BUMPER ASSY, INNER WING SLAT OUTBD TRACK UP STOP INBD LH	1	
	25-11194- 4	• • BUMPER ASSY, INNER WING SLAT OUTBD TRACK UP STOP INBD RH	1	
- 58	25-11192- 3	• • BUMPER ASSY, INNER WING SLAT UP STOP OUTBD LH	1	
	25-11192- 4	• • BUMPER ASSY, INNER WING SLAT UP STOP OUTBD RH	1	
- 59	25-11166- 3	• • FITTING, INNER WING SLAT ACTUATOR SUP. LH	1	
	25-11166- 4	• • FITTING, INNER WING SLAT ACTUATOR SUP. RH	1	
- 60	25-19021- 5	• • CARRIAGE ASSY, INNER WING AFT LH, SEE FIG. 21	1	
	25-19021- 6	• • CARRIAGE ASSY, INNER WING AFT RH, SEE FIG. 21	1	
- 61	25-11113- 1	• FITTING ASSY, OUTBD FWD STORES SUPPORT LH	1	
	25-11113- 2	• FITTING ASSY, OUTBD FWD STORES SUPPORT RH	1	
		ATTACHING PARTS		
- 62	AN5-10A	• BOLT	2	
	AN960D516L	• WASHER	2	
	AN960D516	• WASHER	4	
	AN365-524	• NUT	2	
- 63	AN5-11A	• BOLT	1	
	AN960D516L	• WASHER	1	
	AN960D516	• WASHER	1	
	AN365-524	• NUT	1	
- 64	AN5-13A	• BOLT	1	
	AN960D516	• WASHER	3	
	AN365-524	• NUT	1	
		¤----¤-¤-¤----¤		
	52-022-094-0500	• • PIN, ROLL (EN)	1	
- 65	25-11140- 5	• • INSERT, STORES SUPPORT	1	
- 66	2182-7	• RECEPTACLE (CED)	1	
- 67	25-11195- 5	• SHIM, LEADING EDGE WING SLAT OUTBD UP STOP	2	
- 68	25-11195- 3	• SHIM, LEADING EDGE WING SLAT OUTBD UP STOP	2	
- 69	25-11196- 5	• SHIM, LEADING EDGE WING SLAT INBD UP STOP	2	
- 70	25-11196- 3	• SHIM, LEADING EDGE WING SLAT INBD UP STOP	2	
		ATTACHING PARTS		
- 71	NAS229-11	• SCREW	4	
	AN960D10L	• WASHER	4	
		¤----¤-¤-¤----¤		
	25-11009- 1	• SPAR ASSY, INNER WING FRONT LH	1	
	25-11009- 2	• SPAR ASSY, INNER WING FRONT RH	1	

FIGURE & INDEX NUMBER	PART NUMBER	1 2 3 4 5 6 7 DESCRIPTION	UNITS PER ASS'Y	USABLE ON CODE
20 - 72	25-11013- 1	• • FITTING ASSY, FRONT SPAR INNER WING HINGE LH	1	
	25-11013- 2	• • FITTING ASSY, FRONT SPAR INNER WING HINGE RH	1	
- 73	AN200KS4	• • • BEARING	2	
	52-022-094-0500	• • • PIN, ROLL (EN)	1	
- 74	25-11140- 7	• • • INSERT, STORES SUPPORT	1	
- 75	25-61269- 3	• • SUPPORT, AILERON CONTROL IDLER	2	
		ATTACHING PARTS		
	AN4-10A	• • BOLT	4	
	AN960D416L	• • WASHER	4	
	AN960D416	• • WASHER	8	
	AN365-428	• • NUT	4	
		¤----¤-¤-¤----¤		
- 76	25-58181- 3	• • CLIP, WING TANK SUPPORT	10	
- 77	25-61252- 5	• • SUPPORT, AILERON CONTROL IDLER	1	
		ATTACHING PARTS		
- 78	AN4-10A	• • BOLT	1	
	AN960D416L	• • WASHER	1	
	AN960D416	• • WASHER	2	
	AN365-428	• • NUT	1	
- 79	AN4-14A	• • BOLT	1	
	AN960D416L	• • WASHER	1	
	AN960D416	• • WASHER	2	
	AN365-428	• • NUT	1	
		¤----¤-¤-¤----¤		
- 80	25-11011- 3	• • FITTING, FRONT SPAR TO FUSELAGE ATTACHING	1	

Inner Wing

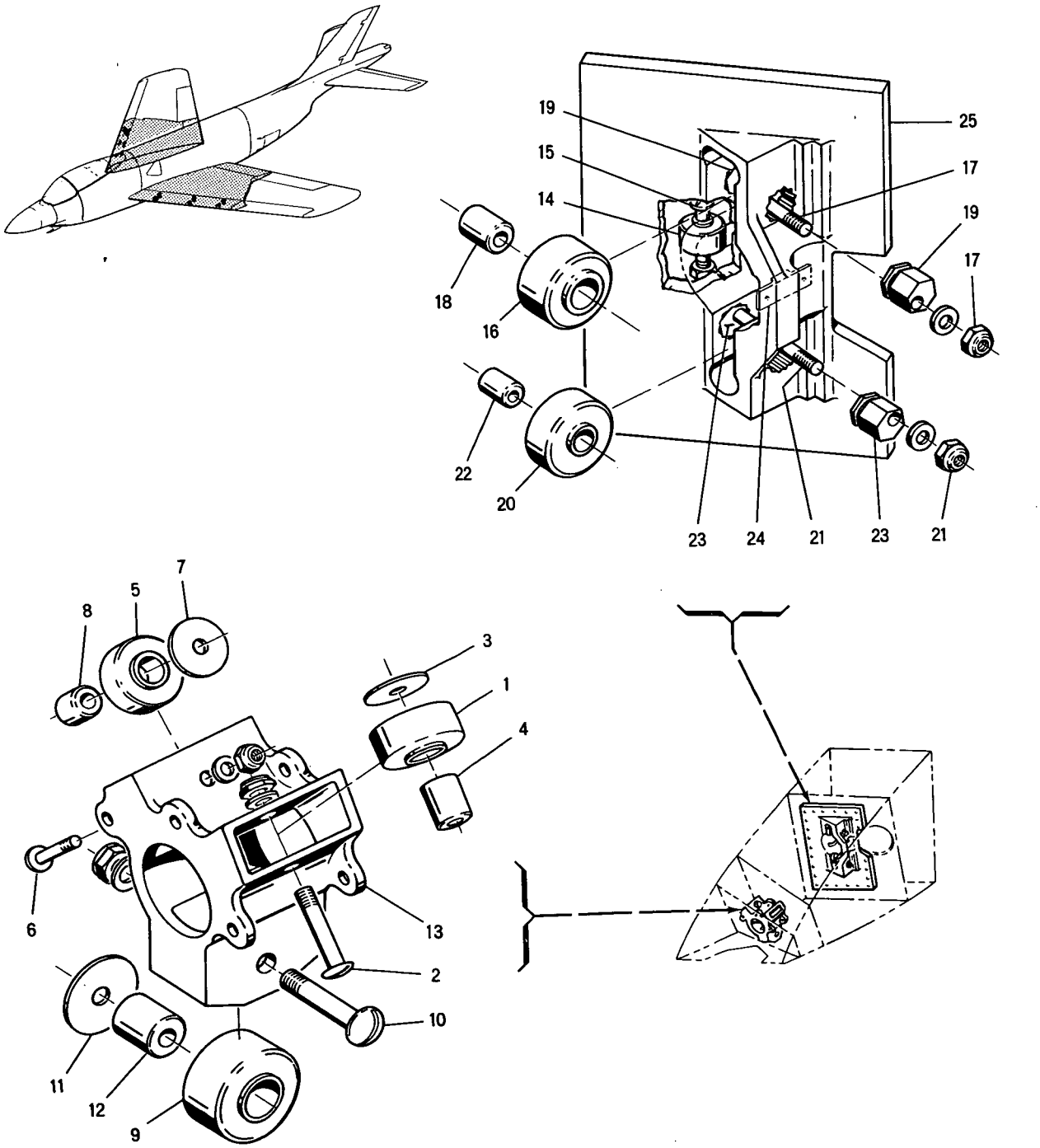

Figure 21 - Inner Wing Slat Forward and Aft Carriage Assemblies

FIGURE & INDEX NUMBER	PART NUMBER	1 2 3 4 5 6 7 DESCRIPTION	UNITS PER ASS'Y	USABLE ON CODE
21 -	25-19003- 1	CARRIAGE ASSEMBLY, INNER WING SLAT TRACK ROLLER, SEE FIG. 20-20 FOR NEXT HIGHER ASSEMBLY	REF	
	25-19003- 3	CARRIAGE ASSEMBLY, INNER WING SLAT TRACK ROLLER, SEE FIG. 20-42 & 20-54 FOR NEXT HIGHER ASSY	REF	
- 1	10NBF1224	. ROLLER (RBC)	1	
		ATTACHING PARTS		
- 2	AN25-23A	. BOLT	1	
	AN960D516	. WASHER	1	
- 3	4M36-02006	. WASHER (MDA)	1	
- 4	25-19013- 7	. BUSHING, SLAT TRACK ROLLER	1	
	AN364-524	. NUT	1	
		¤----¤-¤-¤----¤		
- 5	8NBF1021	. ROLLER (RBC)	1	
		ATTACHING PARTS		
- 6	AN24-21A	. BOLT	1	
	AN960D416	. WASHER	1	
- 7	4M36-02027	. WASHER (MDA)	1	
- 8	25-19013- 5	. BUSHING, SLAT TRACK ROLLER	1	
	AN364-428	. NUT	1	
		¤----¤-¤-¤----¤		
- 9	12NBF1628	. ROLLER (RBC)	1	25-19003-1
	8NBF1021	. ROLLER (RBC)	1	25-19003-3
		ATTACHING PARTS		
- 10	AN26-28A	. BOLT	1	25-19003-1
	AN24-21A	. BOLT	1	25-19003-3
	AN960D616	. WASHER	1	25-19003-1
	AN960D416	. WASHER	1	25-19003-3
- 11	4M36-03011	. WASHER (MDA)	1	25-19003-1
	4M36-02027	. WASHER (MDA)	1	25-19003-3
- 12	25-19013- 9	. BUSHING, SLAT TRACK ROLLER	1	25-19003-1
	25-19013- 5	. BUSHING, SLAT TRACK ROLLER	1	25-19003-3
	AN364-624	. NUT	1	25-19003-1
	AN364-428	. NUT	1	25-19003-3
		¤----¤-¤-¤----¤		
- 13	25-19011- 3	. CARRIAGE, INNER WING FORWARD SLAT TRACK ROLLER	1	25-19003-1
	25-19011- 5	. CARRIAGE, INNER WING FORWARD SLAT TRACK ROLLER	1	25-19003-3
	25-19021- 1	CARRIAGE ASSY, INNER WING AFT LH, SEE FIG. 20-26 FOR NEXT HIGHER ASSEMBLY	REF	
	25-19021- 2	CARRIAGE ASSY, INNER WING AFT RH, SEE FIG. 20-26 FOR NEXT HIGHER ASSEMBLY	REF	
	25-19021- 3	CARRIAGE ASSY, INNER WING AFT, SEE FIG. 20-46 FOR NEXT HIGHER ASSY	REF	
	25-19021- 5	CARRIAGE ASSY, INNER WING AFT LH, SEE FIG. 20-60 FOR NEXT HIGHER ASSEMBLY	REF	
	25-19021- 6	CARRIAGE ASSY, INNER WING AFT RH, SEE FIG. 20-60 FOR NEXT HIGHER ASSEMBLY	REF	
- 14	AN207DP3	. BEARING	1	
		ATTACHING PARTS		
- 15	AN23-24A	. BOLT	1	
	AN960D10	. WASHER	4	
	AN364-1032	. NUT	1	
		¤----¤-¤-¤----¤		
- 16	10NBF1224	. ROLLER (RBC)	1	25-19021-1 & -2
	8NBF1021	. ROLLER (RBC)	1	25-19021-3, -5 & -6
		ATTACHING PARTS		
- 17	AN4-24A	. BOLT	1	
	AN960D416L	. WASHER	2	
- 18	25-19013- 11	. BUSHING, SLAT TRACK ROLLER	1	25-19021-1 & -2
	25-19013- 5	. BUSHING, SLAT TRACK ROLLER	1	25-19021-3, -5 & -6
	AN364-428	. NUT	1	
		¤----¤-¤-¤----¤		
- 19	25-19511- 5	. BUSHING, SLAT TRACK AFT ROLLER ECCENTRIC	2	
- 20	8NBF1021	. ROLLER (RBC)	1	
		ATTACHING PARTS		
- 21	AN4-24A	. BOLT	1	
	AN960D416L	. WASHER	2	
- 22	25-19013- 5	. BUSHING, SLAT TRACK ROLLER	1	
	AN364-428	. NUT	1	
		¤----¤-¤-¤----¤		
- 23	25-19511- 5	. BUSHING, SLAT TRACK AFT ROLLER ECCENTRIC	2	
- 24	25-19512- 3	. PAD, SLAT TRACK CHAFING	1	
- 25	25-19018- 3	. CARRIAGE, INNER WING AFT INBD TRACK ROLLER LH	1	25-19021-1
	25-19018- 4	. CARRIAGE, INNER WING AFT INBD TRACK ROLLER RH	1	25-19021-2
	25-19019- 3	. CARRIAGE, INNER WING AFT CENTER TRACK ROLLER	1	25-19021-3
	25-19020- 3	. CARRIAGE, INNER WING AFT OUTBD TRACK ROLLER LH	1	25-19021-5
	25-19020- 4	. CARRIAGE, INNER WING AFT OUTBD TRACK ROLLER RH	1	25-19021-6

Inner Wing

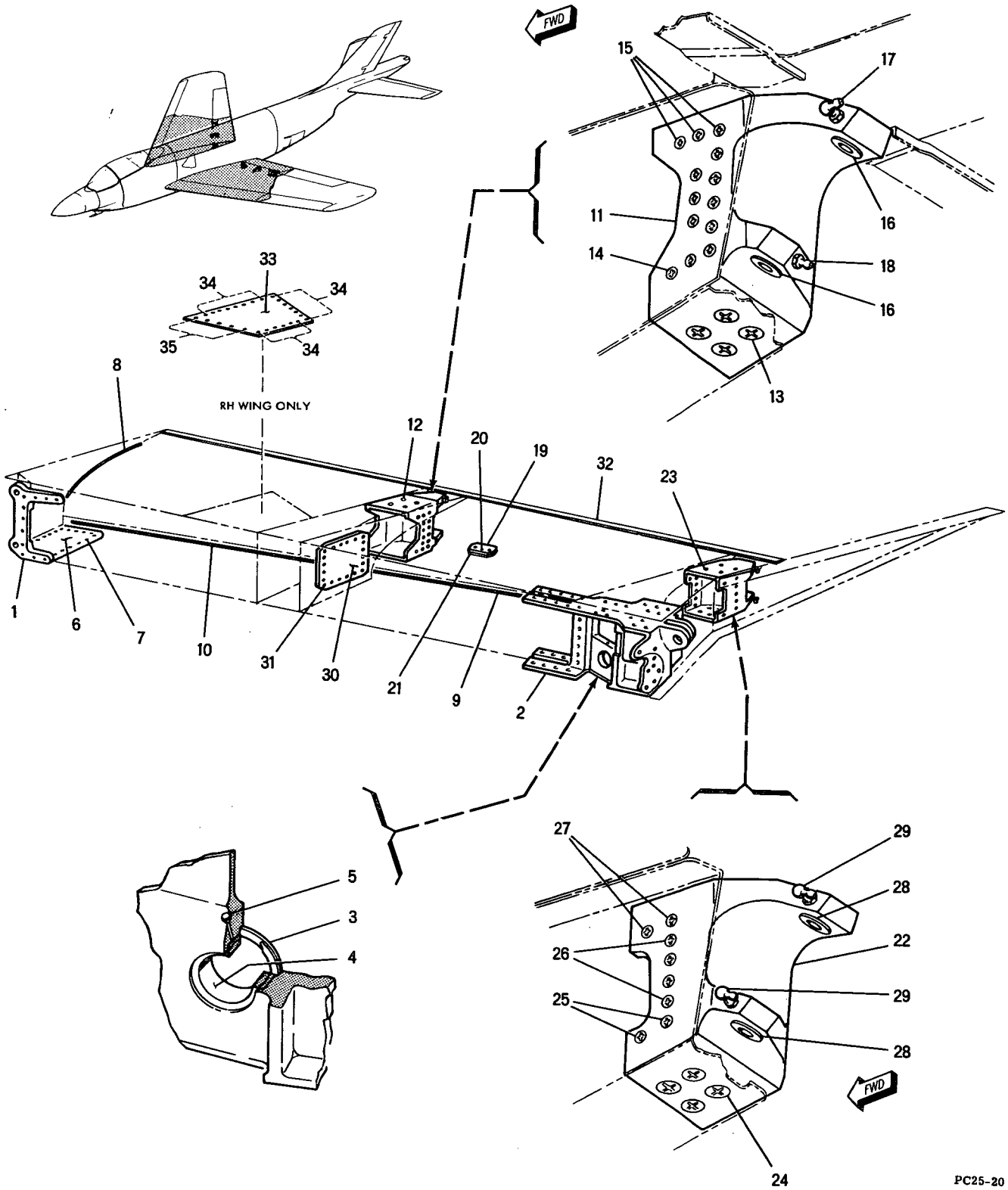

Figure 22 -- Inner Wing Trailing Edge Assembly

FIGURE & INDEX NUMBER	PART NUMBER	1 2 3 4 5 6 7 DESCRIPTION	UNITS PER ASS'Y	USABLE ON CODE
22 -	25-11074- 1	TRAILING EDGE ASSY, INNER WING LH, SEE FIG. 18-2 FOR NEXT HIGHER ASSEMBLY	REF	A
	25-11074-301	TRAILING EDGE ASSY, INNER WING LH, SEE FIG. 18-2 FOR NEXT HIGHER ASSEMBLY	REF	B-C
	25-11074- 2	TRAILING EDGE ASSY, INNER WING RH, SEE FIG. 18-2 FOR NEXT HIGHER ASSEMBLY	REF	A
	25-11074-302	TRAILING EDGE ASSY, INNER WING RH, SEE FIG. 18-2 FOR NEXT HIGHER ASSEMBLY	REF	B-C
	25-11010- 1	• SPAR ASSY, INNER WING REAR LH	1	
	25-11010- 2	• SPAR ASSY, INNER WING REAR RH	1	
- 1	25-11015- 3	• • FITTING, REAR SPAR TO FUSELAGE ATTACHING LH	1	
	25-11015- 4	• • FITTING, REAR SPAR TO FUSELAGE ATTACHING RH	1	
- 2	25-11088- 1	• • FITTING ASSY, REAR SPAR WING FOLD LH	1	
	25-11088- 2	• • FITTING ASSY, REAR SPAR WING FOLD RH	1	
- 3	RRT225C	• • • RING, RETAINING (RMS)	1	
- 4	HSSB26-1	• • • BEARING (HLF)	1	
- 5	NAS497	• • • FITTING, LUB	1	A-B
	NAS516	• • • FITTING, LUB		C-F
- 6	25-11074-133	• DOOR LH	1	A-B
	25-11074-135	• DOOR LH	1	C-F
	25-11074-134	• DOOR RH	1	A-B
	25-11074-136	• DOOR RH	1	C-F
		ATTACHING PARTS		
- 7	AN509-10R11	• SCREW	29	
		¤----¤-¤-¤----¤		
- 8	25-11074- 43	• SEAL, SELECTED FROM 11M601 (MDA)	1	
- 9	25-11074-107	• SEAL, SELECTED FROM 11M600 (MDA)	1	
- 10	25-11074-105	• SEAL, SELECTED FROM 11M600 (MDA)	1	
- 11	25-11036- 1	• FITTING ASSY, FLAP ARM SUPPORT LH	1	
	25-11036- 2	• FITTING ASSY, FLAP ARM SUPPORT RH	1	
		ATTACHING PARTS		
- 12	AN509-516R14	• SCREW	4	
- 13	AN509-516R14	• SCREW	4	
	AN960D516	• WASHER	4	
	AN364-524	• NUT	4	
- 14	AN509-10R11	• SCREW	19	
	AN960D10	• WASHER	19	
	AN365-1032	• NUT	19	
- 15	AN509-10R12	• SCREW	6	
	AN960D10	• WASHER	6	
	AN365-1032	• NUT	6	
		¤----¤-¤-¤----¤		
- 16	25-11131- 3	• • BUSHING, FLAP ARM SUPPORT FITTING	2	
- 17	AN944-301	• • FITTING, LUB	1	
- 18	AN944-101	• • FITTING, LUB	1	
- 19	25-11074- 57	• STOP, FLAP UP LH	1	
	25-11074- 58	• STOP, FLAP UP RH	1	
		ATTACHING PARTS		
- 20	AN509-10R11	• SCREW	2	
- 21	25-11074- 59	• SHIM, BRASS LAMINATED	1	
		¤----¤-¤-¤----¤		
- 22	25-11037- 1	• FITTING ASSY, FLAP ARM SUPPORT LH	1	
	25-11037- 2	• FITTING ASSY, FLAP ARM SUPPORT RH	1	
		ATTACHING PARTS		
- 23	AN509-416R13	• SCREW	4	
- 24	AN509-416R15	• SCREW	4	
	AN960D416	• WASHER	4	
	AN364-428	• NUT	4	
- 25	AN509-416R12	• SCREW	4	
	AN960D416	• WASHER	4	
	AN364-428	• NUT	4	
- 26	AN509-10R11	• SCREW	8	
	AN960D10	• WASHER	8	
	AN365-1032	• NUT	8	
- 27	AN509-416R13	• SCREW	4	
	AN960D416	• WASHER	4	
	AN364-428	• NUT	4	
		¤----¤-¤-¤----¤		
- 28	25-11162- 3	• • BUSHING, FLAP ARM SUPPORT FITTING	2	
- 29	AN944-301	• • FITTING, LUB	2	
	25-11153-301	• RIB ASSY, TRAILING EDGE CLOSURE LH	1	
	25-11153-302	• RIB ASSY, TRAILING EDGE CLOSURE RH	1	
- 30	25-11153- 21	• • DOOR	1	

FIGURE & INDEX NUMBER	PART NUMBER	1 2 3 4 5 6 7 DESCRIPTION	UNITS PER ASS'Y	USABLE ON CODE
22 -		ATTACHING PARTS		
- 31	AN3-5A	• • BOLT	22	
	AN960D10	• • WASHER	44	
		¤----¤-¤-¤-----¤		
- 32	25-11074- 51	• TIP	1	
- 33	25-11074-121	• DOOR, RIGHT SIDE ONLY	1	
		ATTACHING PARTS		
- 34	AN509-10R10	• SCREW	20	
- 35	AN509-416R18	• SCREW	5	
		¤----¤-¤-¤-----¤		

FIGURE & INDEX NUMBER	PART NUMBER	1 2 3 4 5 6 7 DESCRIPTION	UNITS PER ASS'Y	USABLE ON CODE
23 -	25-14500- 1	MECHANISM INSTL, PIN PULL LH, SEE FIG. 15-8 FOR NEXT HIGHER ASSEMBLY	REF	
	25-14500- 2	MECHANISM INSTL, PIN PULL RH, SEE FIG. 15-8 FOR NEXT HIGHER ASSEMBLY	REF	
- 1	25-69041- 1	• CYLINDER ASSY, WING FOLD PIN PULL, SEE FIG. 24	1	
		ATTACHING PARTS		
- 2	25-14516- 3	• BOLT, PIN PULL MECHANISM SHEAR	1	
	AN960D516	• WASHER	1	
	AN960D416	• WASHER	2	
	AN365-428	• NUT	1	
- 3	AN7-24	• BOLT	1	
	4M36-03009	• WASHER (MDA)	2	
	NAS72-7-012	• BUSHING	2	
	AN310-7	• NUT	1	
	AN380-3-4	• PIN, COTTER	1	
		¤----¤-¤-¤----¤		
- 4	25-14512- 1	• LINK ASSEMBLY, MAIN PIN PULL MECHANISM	1	
		ATTACHING PARTS		
- 5	AN4-11A	• BOLT	1	
	AN960D416L	• WASHER	1	
	NAS74A4-005	• BUSHING	1	
	AN960D416	• WASHER	2	
	AN365-428	• NUT	1	
		¤----¤-¤-¤----¤		
- 6	NAS77-10-22	• • BUSHING	2	
- 7	25-14505- 3	• PIN, MAIN SPAR WING HINGE LOCKING	1	
- 8	25-14513- 1	• LINK ASSY, PIN PULL MECHANISM	1	
		ATTACHING PARTS		
- 9	AN6-17A	• BOLT	1	
	AN960D616	• WASHER	3	
	NAS72-6-012	• BUSHING	1	
	AN365-624	• NUT	1	
		¤----¤-¤-¤----¤		
- 10	4M34P10-15	• • BUSHING (MDA)	2	
- 11	4M34P9-12	• • BUSHING (MDA)	2	
- 12	25-14511- 1	• IDLER ASSY, PIN PULL MECHANISM	1	
		ATTACHING PARTS		
- 13	AN5-16A	• BOLT	1	
	AN960D516L	• WASHER	1	
	NAS72-5-013	• BUSHING	1	
	AN960D516	• WASHER	2	
	AN365-524	• NUT	1	
		¤----¤-¤-¤----¤		
- 14	4M34P8-31	• • BUSHING (MDA)	2	
- 15	4M34P9-29	• • BUSHING (MDA)	1	
- 16	AN944-101	• • FITTING, LUB	1	
- 17	25-14503- 1	• ROD ASSEMBLY, PIN PULL MECHANISM FORWARD	1	
		ATTACHING PARTS		
- 18	AN4-11A	• BOLT	1	
	AN960D416L	• WASHER	1	
	NAS74A4-005	• BUSHING	1	
	AN960D416	• WASHER	1	
	AN365-428	• NUT	1	
		¤----¤-¤-¤----¤		
- 19	25-14510- 3	• • FITTING, PIN PULL MECH FORWARD PUSH ROD	1	
- 20	25-14515- 3	• • FITTING, PIN PULL MECH FORWARD PUSH ROD AFT	1	
- 21	25-14506- 3	• PIN, FRONT SPAR WING HINGE LOCKING	1	
- 22	25-14507- 3	• PIN, AFT SPAR WING HINGE LOCKING	1	
		ATTACHING PARTS		
- 23	AN4-12A	• BOLT	1	
	AN960D416L	• WASHER	1	
	NAS74A4-006	• BUSHING	1	
	AN960D416	• WASHER	2	
	AN365-428	• NUT	1	
		¤----¤-¤-¤----¤		
- 24	25-14504-301	• ROD ASSEMBLY, PIN PULL MECHANISM AFT	1	
		ATTACHING PARTS		
- 25	AN509-516R19	• SCREW	1	
	NAS72-5-005	• BUSHING	1	
	AN960D516	• WASHER	1	
	AN365-524	• NUT	1	
		¤----¤-¤-¤----¤		

Inner Wing

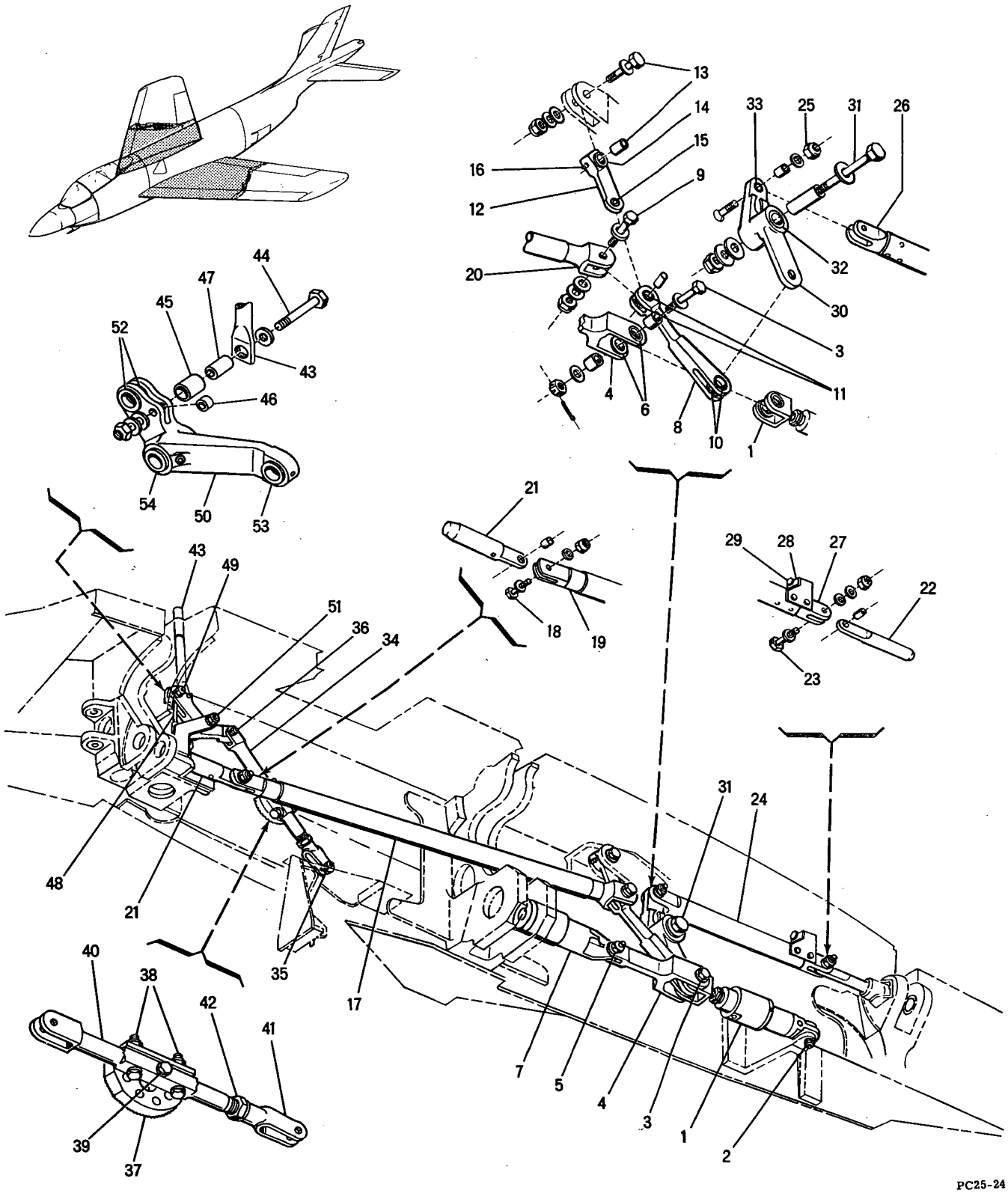

Figure 23 -- Pin Pull Mechanism and Wing Fold Warning Flag Installations

FIGURE & INDEX NUMBER	PART NUMBER	1 2 3 4 5 6 7 DESCRIPTION	UNITS PER ASS'Y	USABLE ON CODE
23 - 26	25-14509- 5	• • FITTING, PIN PULL MECH AFT PUSH ROD	1	
- 27	25-14508- 3	• • FITTING, PIN PULL MECH AFT PUSH ROD AFT	1	
- 28	25-11055- 1	• • BRACKET ASSY, WING FOLD LIMIT SWITCH ACTUATOR	1	
- 29	3M6-3-12	• • • BOLT, LIMIT SWITCH ADJUSTING (MDA)	1	
- 30	25-14502- 1	• BELL CRANK ASSY, PIN PULL MECH, RIGHT SIDE	1	
	25-14502- 2	• BELL CRANK ASSY, PIN PULL MECH, LEFT SIDE	1	
		ATTACHING PARTS		
- 31	AN7-54A	• BOLT	1	
	AN960D716L	• WASHER	1	
	NAS72-7-201	• BUSHING	1	
	AN960D716	• WASHER	2	
	AN365-720	• NUT	1	
		¤----¤-¤-¤----¤		
- 32	4M33P10-030	• • BUSHING (MDA)	2	
- 33	4M33P8-009	• • BUSHING (MDA)	1	
	AN944-101	• • FITTING, LUB	1	
	25-14550-303	FLAG INSTALLATION, WING FOLD WARNING LH, SEE FIG. 15-9 FOR NEXT HIGHER ASSEMBLY	REF	
	25-14550-304	FLAG INSTALLATION, WING FOLD WARNING RH, SEE FIG. 15-9 FOR NEXT HIGHER ASSEMBLY	REF	
- 34	25-14557- 1	• ROD ASSY, WING FOLD WARNING FLAG LH	1	
	25-14557- 2	• ROD ASSY, WING FOLD WARNING FLAG RH	1	
		ATTACHING PARTS		
- 35	AN394-19	• PIN	1	
	AN960D416	• WASHER	1	
	AN381-2-8	• PIN, COTTER	1	
- 36	AN23-15A	• BOLT	1	
	AN960D10L	• WASHER	1	
	NAS72-3-007	• BUSHING	1	
	AN960D10	• WASHER	1	
	AN364-1032	• NUT	1	
		¤----¤-¤-¤----¤		
- 37	25-14557- 7	• • CAM LH	1	
	25-14557- 8	• • CAM RH	1	
		ATTACHING PARTS		
- 38	AN3-11A	• • BOLT	2	
	AN960D10L	• • WASHER	18	
	AN960D10	• • WASHER	2	
	AN365-1032	• • NUT	2	
- 39	AN3-14A	• • BOLT	1	
	AN960D10L	• • WASHER	1	
	25-14557- 5	• • WASHER, SPECIAL	1	
	AN960D10	• • WASHER	1	
	AN365-1032	• • NUT	1	
		¤----¤-¤-¤----¤		
- 40	25-14557- 3	• • ROD	1	
- 41	NAS170-5	• • CLEVIS	1	
- 42	AN316-6	• • NUT	1	
	AN960D616L	• • WASHER, USE WITH INDEX 42	1	
- 43	25-14551-301	• FLAG ASSEMBLY, WING FOLD WARNING LH	1	
	25-14551-302	• FLAG ASSEMBLY, WING FOLD WARNING RH	1	
		ATTACHING PARTS		
- 44	AN3-15A	• BOLT	1	
	AN960D10L	• WASHER	1	
	AN960D10	• WASHER	2	
	AN365-1032	• NUT	1	
		¤----¤-¤-¤----¤		
- 45	25-14555- 3	• SPACER, WING FOLD PIN PULL WARNING FLAG	1	
- 46	NAS42DD6-11	• SPACER	1	
- 47	NAS72-3-011	• BUSHING	1	
- 48	25-14552- 3	• PIN, WING FOLD LOCK	1	
		ATTACHING PARTS		
- 49	NAS464-4A9	• BOLT	1	
	AN960D416	• WASHER	2	
	NAS76A4-016	• BUSHING	1	
	AN364-428	• NUT	1	
		¤----¤-¤-¤----¤		
- 50	25-14553- 1	• BELL CRANK ASSEMBLY, WING FOLD WARNING FLAG LH	1	
	25-14553- 2	• BELL CRANK ASSEMBLY, WING FOLD WARNING FLAG RH	1	

FIGURE & INDEX NUMBER	PART NUMBER	1 2 3 4 5 6 7 DESCRIPTION	UNITS PER ASS'Y	USABLE ON CODE
23 -		ATTACHING PARTS		
- 51	AN4-21A	• BOLT	1	
	AN960D416L	• WASHER	1	
	NAS72-4-105	• BUSHING	1	
	AN960D416	• WASHER	2	
	AN365-428	• NUT	1	
		¤----¤-¤-¤----¤		
- 52	4M33-6-005	• • BUSHING (MDA)	2	
- 53	4M33P6-006	• • BUSHING (MDA)	2	
- 54	4M34P7-50	• • BUSHING (MDA)	2	
	NAS497	• • FITTING, LUB	1	

Inner Wing

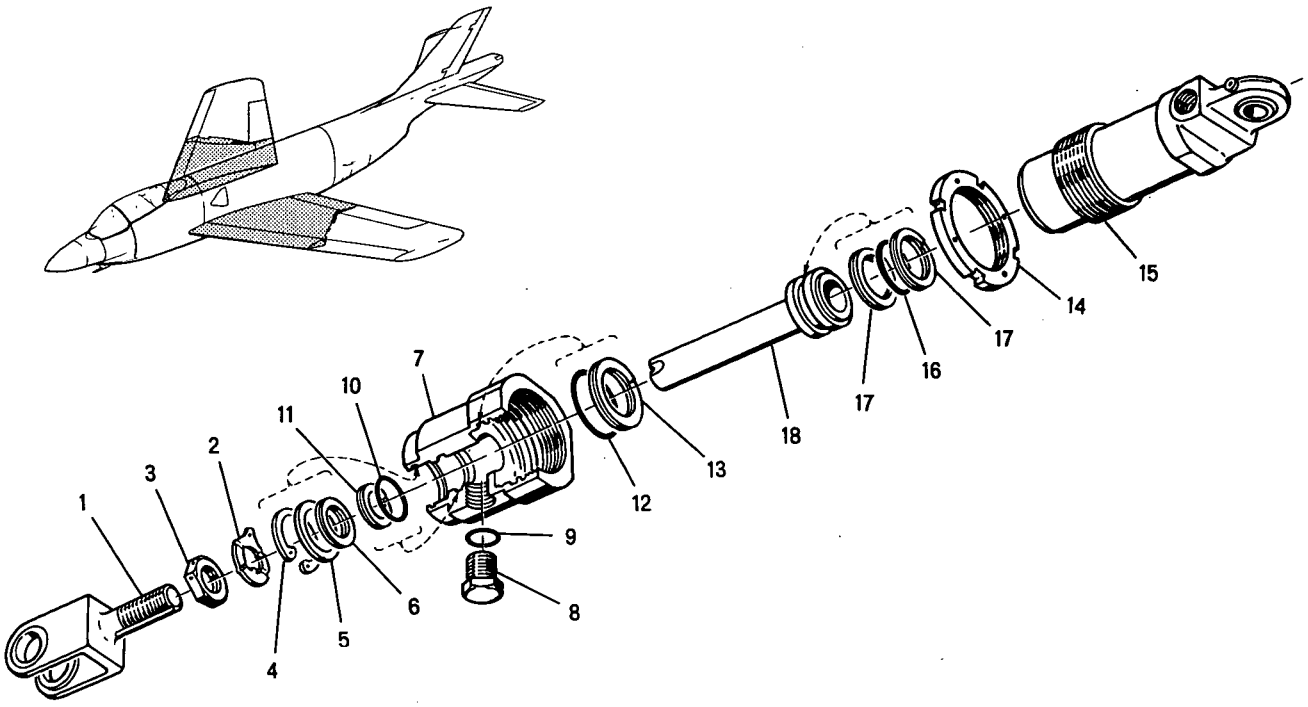

PC25-25

Figure 24 - Wing Fold Pin Pull Cylinder Assembly

FIGURE & INDEX NUMBER	PART NUMBER	1 2 3 4 5 6 7 DESCRIPTION	UNITS PER ASS'Y	USABLE ON CODE
24 -	25-69041- 1	CYLINDER ASSY, WING FOLD PIN PULL, SEE FIG. 23-1 FOR NEXT HIGHER ASSEMBLY	REF	
- 1	25-69046- 1	• YOKE ASSEMBLY, WING FOLD PIN PULL CYLINDER	1	
	4M34P10-12	• • BUSHING (MDA)	2	
- 2	9M103-8	• WASHER (MDA)	1	
- 3	9M104-8	• NUT (MDA)	1	
- 4	NAS50-106	• RING, INTERNAL RETAINER	1	
- 5	4M36-06007	• WASHER, (MDA)	1	
- 6	AN6231A3	• SCRAPER	1	
- 7	25-69044- 3	• CAP, WING FOLD PIN PULL CYLINDER	1	
- 8	AN814-4D	• PLUG	1	
- 9	AN6290-4	• GASKET	1	
- 10	AN6227B12	• PACKING, O RING	1	
- 11	6144-12	• RING, BACK UP (SHWS)	1	
- 12	AN6227B26	• PACKING, O RING	1	
- 13	6144-26	• RING, BACK UP (SHWS)	1	
- 14	25-69047- 3	• NUT, WING FOLD PIN PULL CYLINDER LOCK	1	
- 15	25-69042- 1	• BARREL ASSEMBLY, WING FOLD PIN PULL CYLINDER	1	
	BSR5000G-C	• • BEARING (SWPC)	1	
	NAS497	• • FITTING, LUB	1	
- 16	AN6227B19	• PACKING, O RING	1	
- 17	6144-19	• RING, BACK UP (SHWS)	2	
- 18	25-69043- 3	• PISTON, WING FOLD PIN PULL CYLINDER	1	

Inner Wing

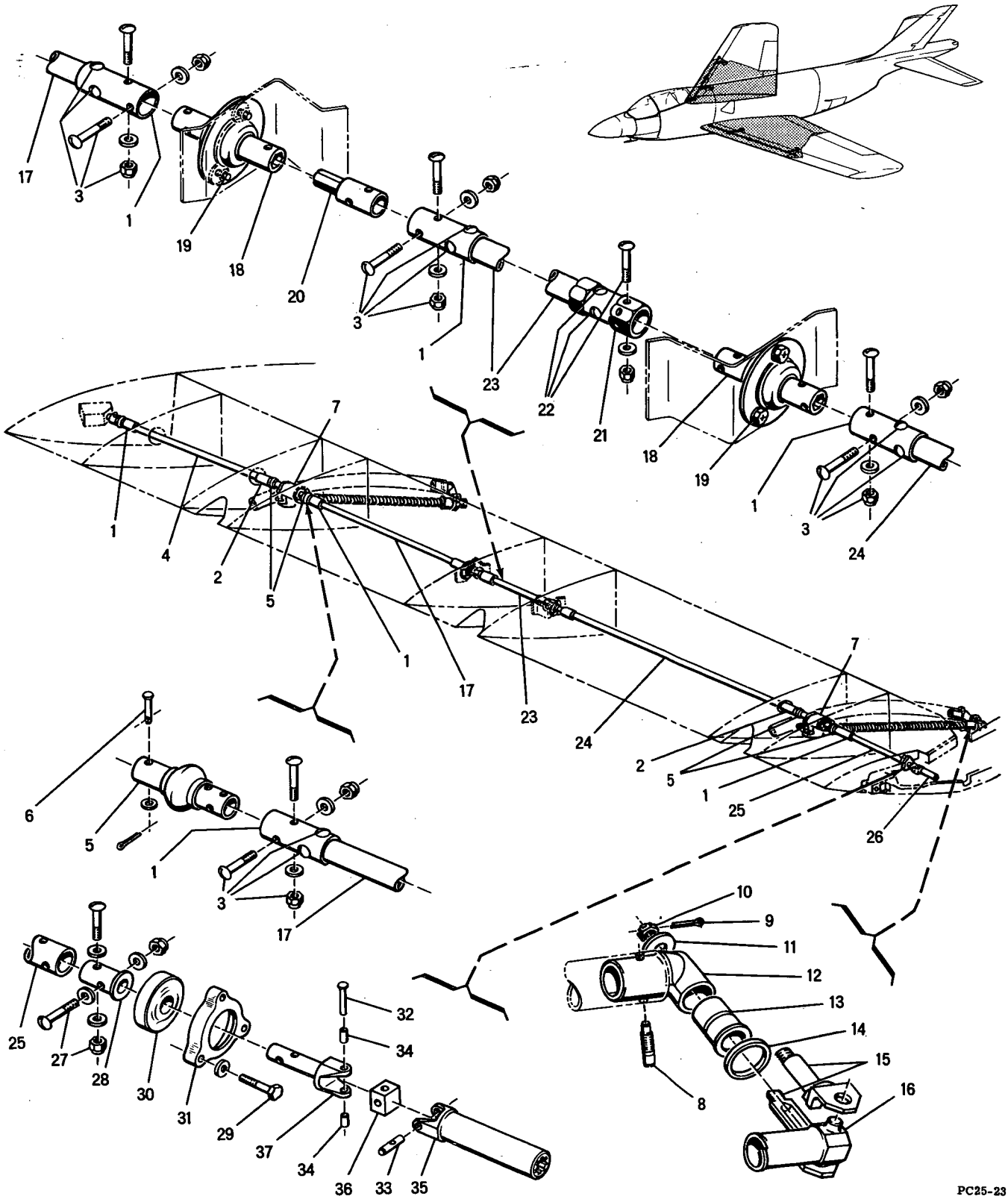

Figure 25 -- Inner Wing Slat Controls Installation

FIGURE & INDEX NUMBER	PART NUMBER	1 2 3 4 5 6 7 DESCRIPTION	UNITS PER ASS'Y	USABLE ON CODE
.25 -	25-67302- 1	CONTROLS INSTALLATION, INNER WING SLAT LH, SEE FIG. 15-5 FOR NEXT HIGHER ASSEMBLY	REF	
	25-67302- 2	CONTROLS INSTALLATION, INNER WING SLAT RH, SEE FIG. 15-5 FOR NEXT HIGHER ASSEMBLY	REF	
- 1	25-67324- 3	• SLEEVE, WING SLAT TORQUE TUBE	6	
- 2	25-67324- 5	• SLEEVE, WING SLAT TORQUE TUBE	2	
		ATTACHING PARTS		
- 3	AN23-19A	• BOLT	32	
	AN960D10	• WASHER	32	
	AN364-1032	• NUT	32	
		¤----¤-¤-¤----¤		
- 4	25-67321- 29	• TUBE, WING SLAT TORQUE, LEFT SIDE, 23.91 IN. LONG	1	
	25-67321- 31	• TUBE, WING SLAT TORQUE, RIGHT SIDE, 22.27 IN. LONG	1	
- 5	25-67330- 3	• JOINT, WING SLAT UNIV, ALTERED FROM UJ364 (APX)	5	
- 6	AN393-25	• PIN, FLAT HEAD	1	
	AN960D10L	• WASHER	1	
	AN380-2-1	• PIN, COTTER	1	
- 7	25-67304- 3	• SCREW JACK ASSEMBLY, WING SLAT, RIGHT SIDE, SEE FIG. 8	2	
	25-67304- 4	• SCREW JACK ASSEMBLY, WING SLAT, LEFT SIDE, SEE FIG. 8	2	
		ATTACHING PARTS		
	AN6-17A	• BOLT	2	
	AN960D616L	• WASHER	2	
	AN960D616	• WASHER	4	
	NAS77A6-21	• BUSHING	2	
	AN365-624	• NUT	2	
		¤----¤-¤-¤----¤		
- 8	25-67339- 3	• SCREW, SLAT SCREW JACK CONNECTOR	2	
- 9	AN380-3-3	• PIN, COTTER	2	
- 10	AN320-6	• NUT	2	
- 11	4M36-03003	• WASHER (MDA)	2	
- 12	25-67333- 1	• HOUSING ASSEMBLY, SLAT SCREW JACK CONNECTOR LH	2	
	25-67333- 2	• HOUSING ASSEMBLY, SLAT SCREW JACK CONNECTOR RH	2	
	BNL1L524	• • NUT, BASKET (PCO)	1	
	25-67336- 3	• • SPACER, SLAT SCREW JACK CONNECTOR	1	
- 13	25-67335- 3	• BUSHING, SLAT SCREW JACK CONNECTOR FLANGED	2	
- 14	25-67334- 3	• BUSHING, SLAT SCREW JACK CONNECTOR, ALTERED FROM 4M33-18-005 (MDA)	2	
- 15	25-67332- 1	• FORK ASSEMBLY, SLAT SCREW JACK CONNECTOR	2	
- 16	25-67318- 5	• NUT, SLAT SCREW JACK	2	
- 17	25-67321- 5	• TUBE, WING SLAT TORQUE, 26.18 IN. LONG	1	
- 18	25-67331- 3	• JOINT, WING SLAT BHD UNIVERSAL, ALTERED FROM 01-0052 (AS)	2	
		ATTACHING PARTS		
- 19	AN3-4A	• BOLT	3	
	AN960D10	• WASHER	3	
		¤----¤-¤-¤----¤		
- 20	25-67320- 3	• FITTING, WING SLAT TORQUE TUBE END	1	
- 21	25-67325- 3	• CONNECTOR, WING SLAT TORQUE TUBE	1	
		ATTACHING PARTS		
- 22	AN23-19A	• BOLT	3	
	AN960D10	• WASHER	3	
	AN364-1032	• NUT	3	
		¤----¤-¤-¤----¤		
- 23	25-67321- 41	• TUBE, WING SLAT TORQUE, 10.97 IN. LONG	1	
- 24	25-67321- 37	• TUBE, WING SLAT TORQUE, 39.24 IN. LONG	1	
- 25	25-67321- 33	• TUBE, WING SLAT TORQUE, 13.25 IN. LONG	1	
- 26	25-67328- 3	• SPLINE ASSEMBLY, SLAT TORQUE SHAFT	1	
- 27	AN23-18A	• • BOLT	2	
	AN960D10L	• • WASHER	2	
	AN960D10	• • WASHER	2	
	AN364-1032	• • NUT	2	
- 28	25-67354- 3	• • BUSHING, SLAT TORQUE SHAFT	1	
- 29	AN3-11A	• • BOLT	3	
	AN960D10	• • WASHER	3	
- 30	AN200KS8	• • BEARING	1	
- 31	25-67327- 3	• • SUPPORT, SLAT TORQUE SHAFT BEARING	1	
- 32	AN435F4-20	• • RIVET	1	
- 33	25-67357- 3	• • PIN, SLAT TORQUE SHAFT UNIVERSAL	1	
- 34	25-67356- 3	• • BUSHING, SLAT TORQUE SHAFT UNIVERSAL	2	
- 35	25-67351- 3	• • SPLINE, SLAT TORQUE SHAFT UNIV INTERNAL	1	
- 36	25-67355- 3	• • BLOCK, SLAT TORQUE SHAFT UNIVERSAL	1	
- 37	25-67353- 3	• • UNIVERSAL, SLAT TORQUE SHAFT HALF	1	

Inner Wing

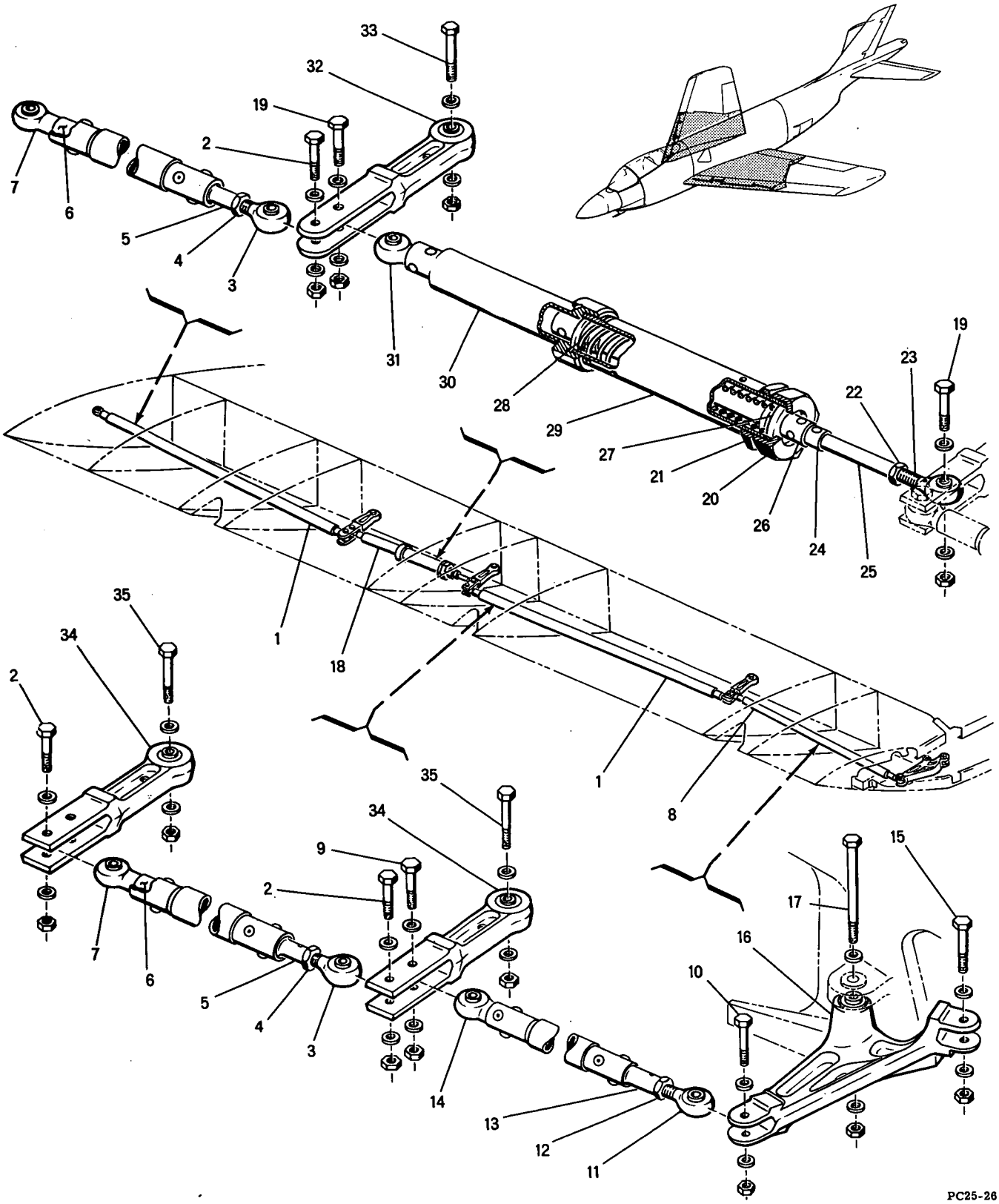

Figure 26 -- Inner wing Surface Controls Installation

FIGURE & INDEX NUMBER	PART NUMBER	1 2 3 4 5 6 7 DESCRIPTION	UNITS PER ASS'Y	USABLE ON CODE
26 -	25-61250- 1	CONTROLS INSTALLATION, INNER WING SURFACE LH, SEE FIG. 15-6 FOR NEXT HIGHER ASSEMBLY	REF	
	25-61250- 2	CONTROLS INSTALLATION, INNER WING SURFACE RH, SEE FIG. 15-6 FOR NEXT HIGHER ASSEMBLY	REF	
- 1	25-61037- 61	. ROD ASSEMBLY, CONTROL	2	
		ATTACHING PARTS		
- 2	NAS464-4A15	. BOLT	3	
	AN960D416L	. WASHER	3	
	AN960D416	. WASHER	3	
	AN364-428	. NUT	3	
		¤----¤-¤-¤----¤		
- 3	RE4M6	. . BEARING, ROD END (FAF)	1	
- 4	AN316-6R	. . NUT	1	
	25-61037-161	. . ROD ASSEMBLY	1	
- 5	25-61073- 3	. . . ADAPTER, ADJUSTABLE ROD END	1	
- 6	25-61070- 3	. . . ADAPTER, ROD END	1	
- 7	RE4H6	. . . BEARING, ROD END (FAF)	1	
- 8	25-61037- 63	. ROD ASSEMBLY, CONTROL	1	
		ATTACHING PARTS		
- 9	NAS464-4A15	. BOLT	1	
	AN960D416L	. WASHER	1	
	AN960D416	. WASHER	1	
	AN364-428	. NUT	1	
- 10	NAS464-4A14	. BOLT	1	
	AN960D416L	. WASHER	1	
	AN960D416	. WASHER	1	
	AN364-428	. NUT	1	
		¤----¤-¤-¤----¤		
- 11	RE4M6	. . BEARING, ROD END (FAF)	1	
- 12	AN316-6R	. . NUT	1	
	25-61037-163	. . ROD ASSEMBLY	1	
- 13	25-61066- 3	. . . ADAPTER, ADJUSTABLE ROD END	1	
- 14	RE4H6	. . . BEARING, ROD END (FAF)	1	
- 15	NAS464-4A14	. BOLT	1	
	AN960D416L	. WASHER	1	
	AN960D416	. WASHER	1	
	AN364-428	. NUT	1	
- 16	25-61251- 1	. BELL CRANK ASSY, AILERON CONTROL WING FOLD LH	1	
	25-61251- 2	. BELL CRANK ASSY, AILERON CONTROL WING FOLD RH	1	
		ATTACHING PARTS		
- 17	NAS464-4A49	. BOLT	1	
	AN960D416L	. WASHER	1	
	AN960D416	. WASHER	1	
	AN364-428	. NUT	1	
		¤----¤-¤-¤----¤		
	4M34-4-31	. . BUSHING (MDA)	2	
- 18	25-61258- 1	. CARTRIDGE ASSY, AILERON CONTROL SYSTEM SPRING	1	
		ATTACHING PARTS		
- 19	NAS464-4A15	. BOLT	2	
	AN960D416L	. WASHER	2	
	AN960D416	. WASHER	2	
	AN364-428	. NUT	2	
		¤----¤-¤-¤----¤		
- 20	25-61262- 5	. . CAP, AILERON CONTROL SYS SPRING CARTRIDGE	1	
- 21	25-61261- 5	. . NUT, AIL. CONTROL SYS SPRING CARTRIDGE LOCK	1	
- 22	AN316-6R	. . NUT	1	
- 23	25-61266- 3	. . BEARING, SPECIAL CONTROL SYSTEM SPRING CARTRIDGE ROD END, ALTERED FROM RE4M6 (FAF)	1	
- 24	25-61259- 1	. . ROD ASSY, AIL. CONTROL SYS SPRING CARTRIDGE	1	
- 25	25-61268- 3	. . . ADAPTER, AILERON CONTROL SYSTEM SPRING CARTRIDGE	1	
- 26	NAS43-10-64	. . . SPACER	2	
- 27	25-61265- 3	. . . PISTON, AILERON CONTROL SYSTEM SPRING CARTRIDGE	2	
- 28	25-61264- 3	. . . SPRING, AILERON CONTROL SYSTEM SPRING CARTRIDGE COMPRESSION	1	
- 29	25-61263- 3	. . BARREL, AIL. CONTROL SYS SPRING CARTRIDGE	1	
- 30	25-61260- 1	. . FITTING ASSY, AILERON CONTROL SYSTEM SPRING CARTRIDGE	1	
- 31	RE4H6	. . . BEARING, ROD END (FAF)	1	
- 32	25-61253- 1	. IDLER ASSEMBLY, AILERON CONTROL	1	

FIGURE & INDEX NUMBER	PART NUMBER	1 2 3 4 5 6 7 DESCRIPTION	UNITS PER ASS'Y	USABLE ON CODE
26 -		ATTACHING PARTS		
- 33	NAS464-4A20	• BOLT	1	
	AN960D416L	• WASHER	1	
	AN960D416	• WASHER	1	
	AN364-428	• NUT	1	
		¤----¤-¤-¤----¤		
	DW4	• • BEARING (FAF)	1	
- 34	25-61253- 3	• IDLER ASSEMBLY, AILERON CONTROL	2	
		ATTACHING PARTS		
- 35	NAS464-4A20	• BOLT	2	
	AN960D416L	• WASHER	2	
	AN960D416	• WASHER	2	
	AN364-428	• NUT	2	
		¤----¤-¤-¤----¤		
	DW4	• • BEARING (FAF)	1	

FIGURE & INDEX NUMBER	PART NUMBER	1 2 3 4 5 6 7 DESCRIPTION	UNITS PER ASS'Y	USABLE ON CODE
27 -	25-69006- 1	HYDRAULIC INSTALLATION, INNER WING LH, LEADING EDGE, SEE FIG. 15-1 FOR NEXT HIGHER ASSY	REF	
	25-69006- 2	HYDRAULIC INSTALLATION, INNER WING RH, LEADING EDGE, SEE FIG. 15-1 FOR NEXT HIGHER ASSY	REF	
- 1	25-69267-301	. SWIVEL ASSEMBLY, UTILITY HYDRAULIC PRESSURE	1	
- 2	AN380-3-5	. . PIN, COTTER	3	
- 3	AN320-6	. . NUT	3	
- 4	AN960D616L	. . WASHER	3	
- 5	25-69228- 1	. . PIN ASSEMBLY, HYDRAULIC SWIVEL	3	
- 6	AN960D816L	. . WASHER	6	
- 7	25-69185- 5	. . FITTING, HYDRAULIC SWIVEL BULKHEAD END	1	
- 8	25-69093- 13	. . LINK ASSEMBLY, HYDRAULIC SWIVEL	1	
- 9	6144-10	. . RING, BACK UP (SHWS)	12	
- 10	AN6227B10	. . PACKING, O RING	12	
- 11	25-69093- 11	. . LINK ASSEMBLY, HYDRAULIC SWIVEL	1	
- 12	25-69252- 3	. . FITTING, HYDRAULIC SWIVEL END	1	
- 13	25-69268- 3	. SWIVEL ASSEMBLY, UTILITY HYDRAULIC RETURN	1	
- 14	AN380-3-5	. . PIN, COTTER	3	
- 15	AN320-6	. . NUT	3	
- 16	AN960D616L	. . WASHER	3	
- 17	25-69228- 1	. . PIN ASSEMBLY, HYDRAULIC SWIVEL	2	
- 18	25-69266- 1	. . PIN ASSEMBLY, HYDRAULIC SWIVEL	1	
- 19	AN960D816L	. . WASHER	8	
- 20	25-69187- 3	. . FITTING, HYDRAULIC SWIVEL	1	
- 21	25-69093- 9	. . LINK ASSEMBLY, HYDRAULIC SWIVEL	1	
- 22	6144-10	. . RING, BACK UP (SHWS)	12	
- 23	AN6227B10	. . PACKING, O RING	12	
- 24	25-69093- 7	. . LINK ASSEMBLY, HYDRAULIC SWIVEL	1	
- 25	25-69185- 5	. . FITTING, HYDRAULIC SWIVEL, BULKHEAD END	1	
	25-69006- 3	HYDRAULIC INSTALLATION, INNER WING LH, LEADING EDGE, SEE FIG. 15-4 FOR NEXT HIGHER ASSY	REF	A-B
	25-69006- 5	HYDRAULIC INSTALLATION, INNER WING LH, LEADING EDGE, SEE FIG. 15-4 FOR NEXT HIGHER ASSY	REF	C-F
	25-69006- 4	HYDRAULIC INSTALLATION, INNER WING RH, LEADING EDGE, SEE FIG. 15-4 FOR NEXT HIGHER ASSY	REF	A-B
	25-69006- 6	HYDRAULIC INSTALLATION, INNER WING RH, LEADING EDGE, SEE FIG. 15-4 FOR NEXT HIGHER ASSY	REF	C-F
- 26	MS21903D6	. UNION	2	
- 27	AN924-6D	. NUT	3	
- 28	AN6289D6	. NUT	2	
- 29	AN6291-6	. RING, BACK UP	2	
- 30	AN6290-6	. GASKET	4	
- 31	AN941D6	. ELBOW	1	
- 32	MS21902D6	. UNION	12	
- 33	25-69428- 83	. TUBE ASSEMBLY, UTILITY PRESSURE, LEFT SIDE	1	
	25-69428- 85	. TUBE ASSEMBLY, UTILITY PRESSURE, RIGHT SIDE	1	
- 34	25-69429- 23	. TUBE ASSEMBLY, UTILITY PRESSURE, LEFT SIDE	1	A-B
	25-69428- 7	. TUBE ASSEMBLY, UTILITY PRESSURE, LEFT SIDE	1	C-F
	25-69429- 25	. TUBE ASSEMBLY, UTILITY PRESSURE, RIGHT SIDE	1	A-B
	25-69428- 9	. TUBE ASSEMBLY, UTILITY PRESSURE, RIGHT SIDE	1	C-F
- 35	25-69429- 19	. TUBE ASSEMBLY, UTILITY PRESSURE, LEFT SIDE	1	A-B
	25-69428- 3	. TUBE ASSEMBLY, UTILITY PRESSURE, LEFT SIDE	1	C-F
	25-69429- 21	. TUBE ASSEMBLY, UTILITY PRESSURE, RIGHT SIDE	1	A-B
	25-69428- 5	. TUBE ASSEMBLY, UTILITY PRESSURE, RIGHT SIDE	1	C-F
- 36	25-69429- 15	. TUBE ASSEMBLY, UTILITY PRESSURE, LEFT SIDE	1	
	25-69429- 17	. TUBE ASSEMBLY, UTILITY PRESSURE, RIGHT SIDE	1	
- 37	25-69429- 11	. TUBE ASSEMBLY, UTILITY PRESSURE, LEFT SIDE	1	
	25-69429- 13	. TUBE ASSEMBLY, UTILITY PRESSURE, RIGHT SIDE	1	
- 38	25-69428-115	. TUBE ASSEMBLY, UTILITY PRESSURE, LEFT SIDE	1	
	25-69428-117	. TUBE ASSEMBLY, UTILITY PRESSURE, RIGHT SIDE	1	
- 39	25-69195-191	. HOSE ASSEMBLY, UTILITY PRESSURE, LEFT SIDE	1	
	ER6292-6-15.50	. . HOSE ASSEMBLY (WH)	1	
	25-69195-195	. HOSE ASSEMBLY, UTILITY PRESSURE, RIGHT SIDE	1	
	ER6292-6-16	. . HOSE ASSEMBLY (WH)	1	
- 40	25-69195-193	. HOSE ASSEMBLY, UTILITY RETURN, LEFT SIDE	1	
	ER6292-6-15.50	. . HOSE ASSEMBLY (WH)	1	
	25-69195-197	. HOSE ASSEMBLY, UTILITY RETURN, RIGHT SIDE	1	
	ER6292-6-16	. . HOSE ASSEMBLY (WH)	1	
- 41	25-69428-119	. TUBE ASSEMBLY, UTILITY RETURN, LEFT SIDE	1	
	25-69428-121	. TUBE ASSEMBLY, UTILITY RETURN, RIGHT SIDE	1	
- 42	25-69429- 43	. TUBE ASSEMBLY, UTILITY RETURN, LEFT SIDE	1	
	25-69429- 45	. TUBE ASSEMBLY, UTILITY RETURN, RIGHT SIDE	1	
- 43	25-69429- 47	. TUBE ASSEMBLY, UTILITY RETURN, LEFT SIDE	1	
	25-69429- 49	. TUBE ASSEMBLY, UTILITY RETURN, RIGHT SIDE	1	
- 44	25-69429- 51	. TUBE ASSEMBLY, UTILITY RETURN, LEFT SIDE	1	A-B
	25-69428- 11	. TUBE ASSEMBLY, UTILITY RETURN, LEFT SIDE	1	C-F
	25-69429- 53	. TUBE ASSEMBLY, UTILITY RETURN, RIGHT SIDE	1	A-B
	25-69428- 13	. TUBE ASSEMBLY, UTILITY RETURN, RIGHT SIDE	1	C-F
- 45	25-69429- 55	. TUBE ASSEMBLY, UTILITY RETURN, LEFT SIDE	1	A-B
	25-69428- 15	. TUBE ASSEMBLY, UTILITY RETURN, LEFT SIDE	1	C-F

Inner Wing

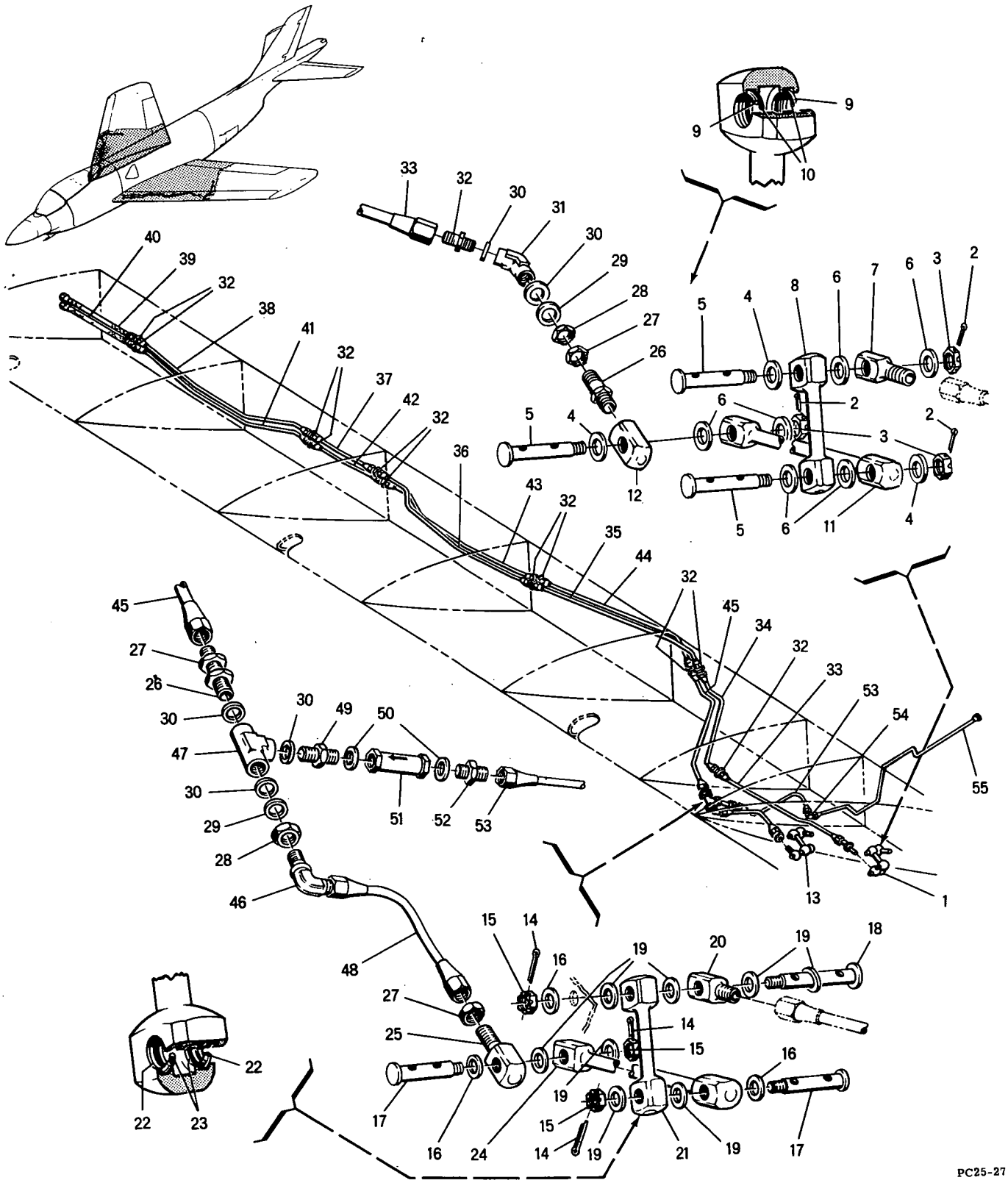

Figure 27 -- Inner Wing Hydraulic Installation (Leading Edge)

FIGURE & INDEX NUMBER	PART NUMBER	1 2 3 4 5 6 7 DESCRIPTION	UNITS PER ASS'Y	USABLE ON CODE
27 -	25-69429- 57	• TUBE ASSEMBLY, UTILITY RETURN, RIGHT SIDE	1	A-B
	25-69428- 17	• TUBE ASSEMBLY, UTILITY RETURN, RIGHT SIDE	1	C-F
- 46	MS21908D6	• ELBOW	1	
- 47	AN938D6	• TEE	1	
- 48	25-69429- 59	• TUBE ASSEMBLY, UTILITY RETURN, LEFT SIDE	1	
	25-69429- 61	• TUBE ASSEMBLY, UTILITY RETURN, RIGHT SIDE	1	
- 49	MS21916D6-4	• REDUCER	1	
- 50	AN6290-4	• GASKET	2	
- 51	AN6280-4	• VALVE	1	
- 52	MS21902D4	• UNION	1	
- 53	25-69429-119	• TUBE ASSEMBLY, UTILITY RETURN, LEFT SIDE	1	
	25-69429-121	• TUBE ASSEMBLY, UTILITY RETURN, RIGHT SIDE	1	
- 54	MS21907D4	• ELBOW	1	
	AN924-4D	• NUT, USE WITH INDEX 54	1	
	AN960D716L	• WASHER, USE WITH INDEX 54	1	
- 55	25-69428- 75	• TUBE ASSEMBLY, UTILITY RETURN, LEFT SIDE	1	
	25-69428- 77	• TUBE ASSEMBLY, UTILITY RETURN, RIGHT SIDE	1	

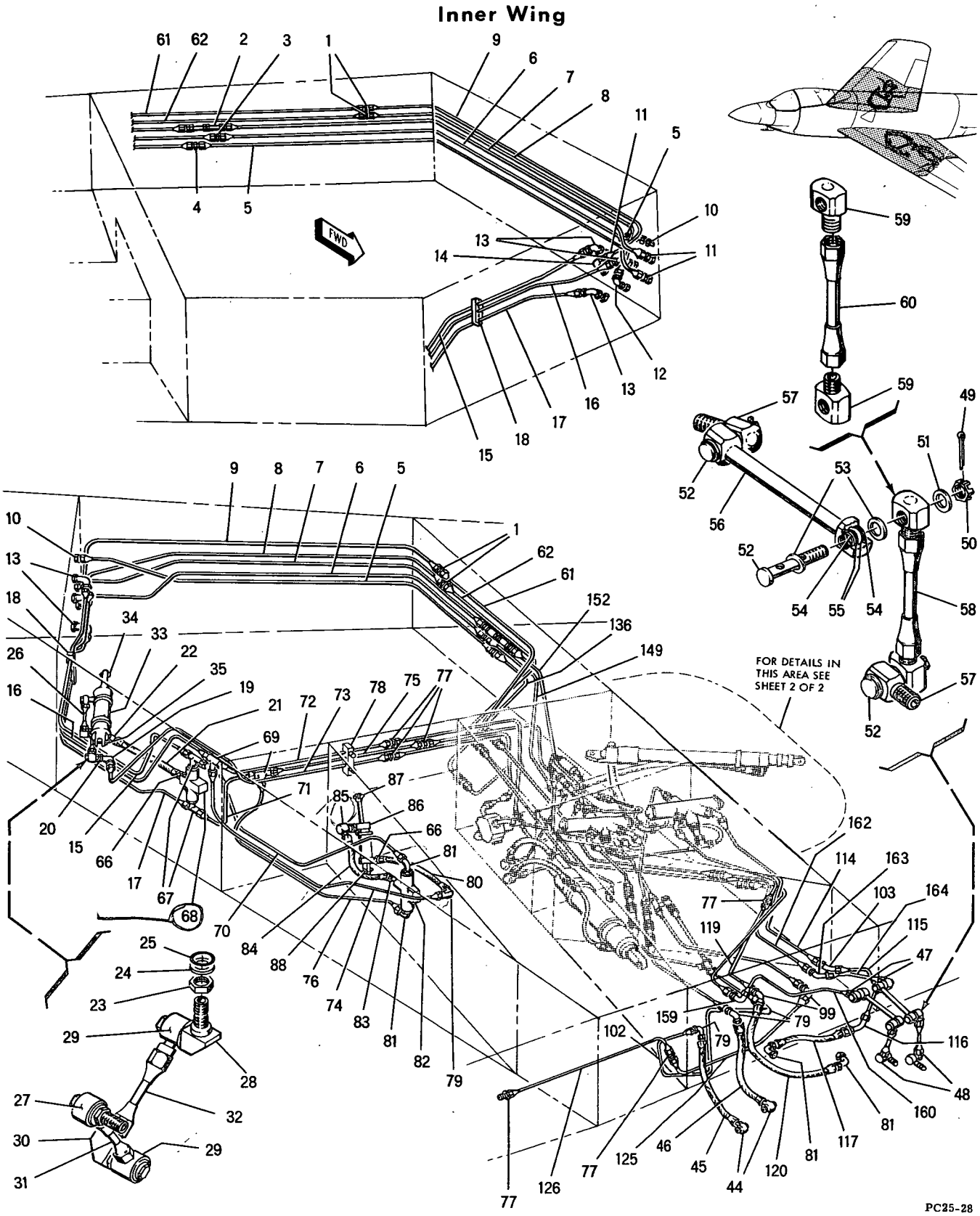

Figure 28 -- Inner Wing Hydraulic Installation (Center and Aft Area) (Sheet 1 of 2)

Inner Wing

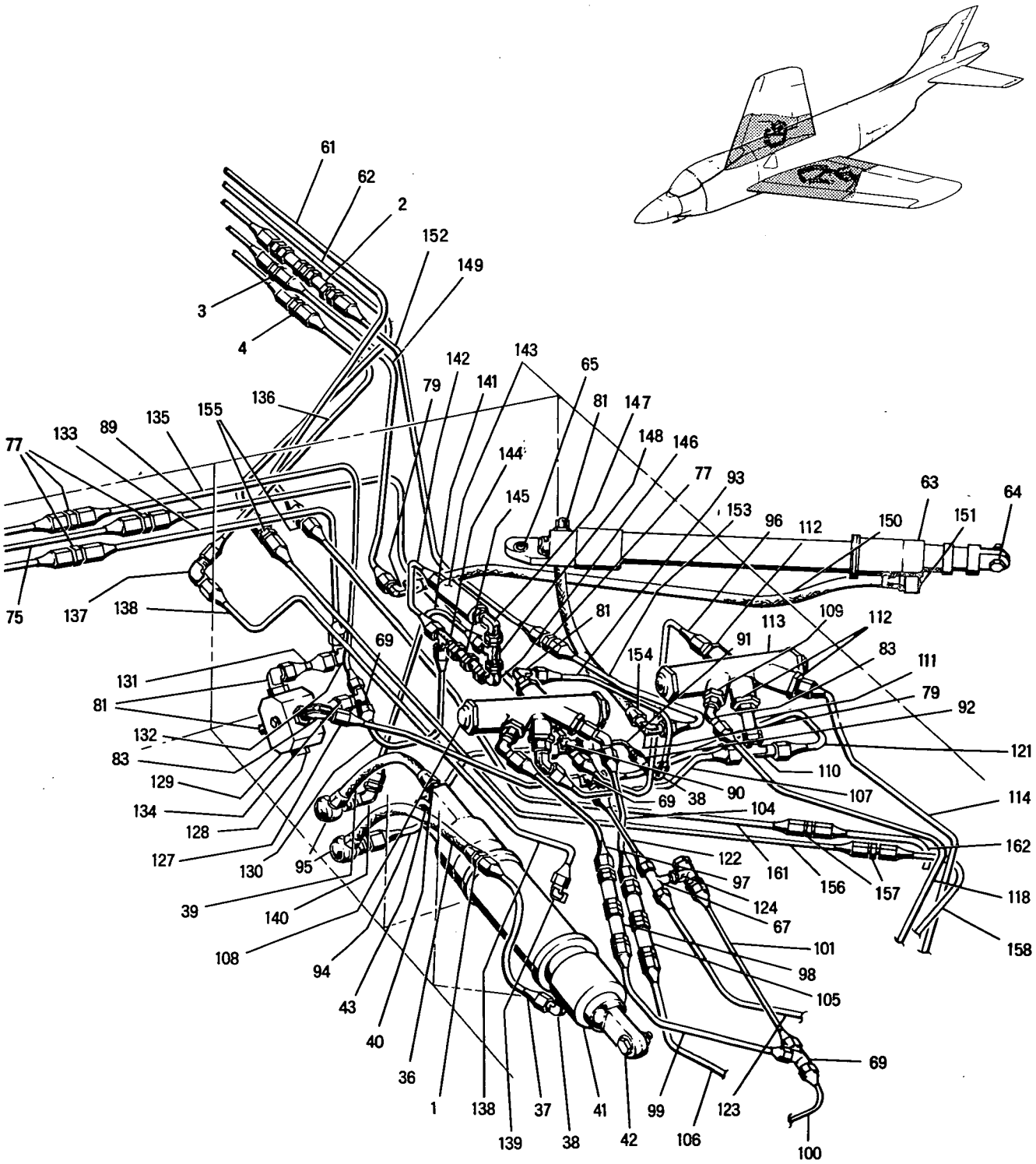

PC25-28

Figure 28 -- Inner Wing Hydraulic Installation (Center and Aft Area) (Sheet 2 of 2)

FIGURE & INDEX NUMBER	PART NUMBER	1 2 3 4 5 6 7 DESCRIPTION	UNITS PER ASS'Y	USABLE ON CODE
28 -	25-69006- 1	HYDRAULIC INSTL, INNER WING LH, CENTER & AFT AREA SEE FIG. 15-1 FOR NEXT HIGHER ASSEMBLY	REF	
	25-69006- 2	HYDRAULIC INSTL, INNER WING RH, CENTER & AFT AREA SEE FIG. 15-1 FOR NEXT HIGHER ASSEMBLY	REF	
- 1	MS21902D6	. UNION	2	
- 2	17-100-6-23	. RESTRICTOR (GPPI)	1	
	MS21902D4	. UNION, USE WITH INDEX 2	2	
	AN6290-4	. GASKET, USE WITH INDEX 2	2	
- 3	MS21902D4	. UNION	2	
- 4	MS21902D5	. UNION	1	
- 5	25-69430- 3	. TUBE ASSEMBLY, HYDRAULIC BRAKE, LEFT SIDE	1	
	25-69430- 5	. TUBE ASSEMBLY, HYDRAULIC BRAKE, RIGHT SIDE	1	
- 6	25-69430- 95	. TUBE ASSEMBLY, FLAP UP, LEFT SIDE	1	
	25-69430- 97	. TUBE ASSEMBLY, FLAP UP, RIGHT SIDE	1	
- 7	25-69430- 87	. TUBE ASSEMBLY, FLAP DOWN, LEFT SIDE	1	
	25-69430- 89	. TUBE ASSEMBLY, FLAP DOWN, RIGHT SIDE	1	
- 8	25-69430-115	. TUBE ASSY, POWER CONTROL RETURN, LEFT SIDE	1	
	25-69430-117	. TUBE ASSY, POWER CONTROL RETURN, RIGHT SIDE	1	
- 9	25-69430-103	. TUBE ASSY, POWER CONTROL PRESSURE, LEFT SIDE	1	
	25-69430-105	. TUBE ASSY, POWER CONTROL PRESSURE, RIGHT SIDE	1	
- 10	25-69264- 3	. UNION, BULKHEAD	1	
	AN924-5D	. NUT, USE WITH INDEX 10	1	
- 11	25-69263- 3	. UNION, BULKHEAD	2	
	AN924-4D	. NUT, USE WITH INDEX 11	2	
- 12	AN941D6	. ELBOW	1	
	AN6290-6	. GASKET, USE WITH INDEX 12	2	
	MS21902D6	. UNION, USE WITH INDEX 12	1	
	25-69265- 3	. UNION, BULKHEAD, USE WITH INDEX 12	1	
	AN924-6D	. NUT, USE WITH INDEX 12	1	
- 13	AN939D4	. ELBOW	3	
	AN6290-4	. GASKET, USE WITH INDEX 13	6	
	MS21902D4	. UNION, USE WITH INDEX 13	3	
	25-69263- 3	. UNION, BULKHEAD, USE WITH INDEX 13	3	
	AN924-4D	. NUT, USE WITH INDEX 13	3	
- 14	AN939D6	. ELBOW	1	
	AN6290-6	. GASKET, USE WITH INDEX 14	2	
	MS21902D6	. UNION, USE WITH INDEX 14	1	
	25-69265- 3	. UNION, BULKHEAD, USE WITH INDEX 14	1	
	AN924-6D	. NUT, USE WITH INDEX 14	1	
- 15	25-69430- 55	. TUBE ASSY, LG EMERGENCY AIR, LEFT SIDE	1	
	25-69430- 57	. TUBE ASSY, LG EMERGENCY AIR, RIGHT SIDE	1	
- 16	25-69430- 63	. TUBE ASSY, LANDING GEAR UP, LEFT SIDE	1	
	25-69430- 65	. TUBE ASSY, LANDING GEAR UP, RIGHT SIDE	1	
- 17	25-69430- 31	. TUBE ASSY, LANDING GEAR DOWN, LEFT SIDE	1	
	25-69430- 33	. TUBE ASSY, LANDING GEAR DOWN, RIGHT SIDE	1	
- 18	25-69339- 1	. BLOCK ASSY, WING CARRY THRU HYD LINE SUPPORT	1	
		ATTACHING PARTS		
	AN3-21A	. BOLT	2	
	AN960D10	. WASHER	2	
	NAS43DD3-32	. SPACER	2	
		¤----¤-¤-¤----¤		
- 19	AN939D4	. ELBOW	1	
	MS21902D4	. UNION, USE WITH INDEX 19	1	
	AN6289D4	. NUT, USE WITH INDEX 19	1	
	AN6291-4	. RING, BACK UP, USE WITH INDEX 19	1	
	AN6290-4	. GASKET, USE WITH INDEX 19	2	
- 20	AN924-4D	. NUT	1	
	AN960D716L	. WASHER, USE WITH INDEX 20	2	
- 21	25-69195-135	. HOSE ASSY, MAIN LANDING GEAR DOOR DOWN	1	
	ER6292-4-9.25	. . HOSE ASSY (WH)	1	
- 22	7M14D4	. SWIVEL ASSY, HYD (MDA)	1	
	AN6289D4	. NUT, USE WITH INDEX 22	1	
	AN6291-4	. RING, BACK UP, USE WITH INDEX 22	1	
	AN6290-4	. GASKET, USE WITH INDEX 22	1	
- 23	AN6289D4	. NUT	1	
- 24	AN6291-4	. RING, BACK UP	1	
- 25	AN6290-4	. GASKET	1	
- 26	25-69056-301	. SWIVEL ASSY, MAIN LG INBOARD DOOR ACTUATOR	1	
- 27	7M14D4	. . SWIVEL ASSEMBLY, HYDRAULIC (MDA)	1	
- 28	7M18D4	. . ELBOW, HYD SWIVEL BULKHEAD (MDA)	1	
	AN6290-4	. . GASKET, USE WITH INDEX 28	1	
- 29	7M7D4	. . SWIVEL ASSEMBLY, HYDRAULIC (MDA)	2	
- 30	7M12D4	. . ELBOW, HYD SWIVEL (MDA)	1	
	AN6290-4	. . GASKET, USE WITH INDEX 30	1	
- 31	25-69431-119	. . TUBE ASSEMBLY, ACTUATOR SWIVEL LINK	1	
- 32	25-69431-121	. . TUBE ASSEMBLY, ACTUATOR SWIVEL LINK	1	
- 33	25-69020- 1	. CYLINDER ASSEMBLY, MAIN LG DOOR ACTUATING, SEE FIG. 30	1	

FIGURE & INDEX NUMBER	PART NUMBER	1 2 3 4 5 6 7 DESCRIPTION	UNITS PER ASS'Y	USABLE ON CODE
28 -		ATTACHING PARTS		
- 34	AN5-12A	• BOLT, SEE FIG. 183-23	REF	
	AN960D516L	• WASHER	REF	
	AN960D516	• WASHER	REF	
	AN365-524	• NUT	REF	
- 35	AN4-13A	• BOLT, SEE FIG. 183-28	REF	
	AN960D416L	• WASHER	REF	
	AN960D416	• WASHER	REF	
	AN365-428	• NUT	REF	
		¤----¤-¤-¤-----¤		
- 36	25-69195-119	• HOSE ASSY, MAIN LANDING GEAR DOWN	1	
	ER6292-4-14.5	• • HOSE ASSY (WH)	1	
- 37	25-69430- 51	• TUBE ASSY, MAIN LANDING GEAR DOWN, LEFT SIDE	1	
	25-69430- 53	• TUBE ASSY, MAIN LANDING GEAR DOWN, RIGHT SIDE	1	
- 38	MS21908D4	• ELBOW	2	
	AN6289D4	• NUT, USE WITH INDEX 38	2	
	AN6291-4	• RING, BACK UP, USE WITH INDEX 38	2	
	AN6290-4	• GASKET, USE WITH INDEX 38	2	
- 39	25-69195-153	• HOSE ASSY, MAIN LANDING GEAR UP	1	
	ER6292-4-12.25	• • HOSE ASSY (WH)	1	
- 40	MS21902D4	• UNION	1	
	AN6290-4	• GASKET, USE WITH INDEX 40	1	
- 41	25-69018-307	• CYLINDER ASSEMBLY, MAIN LANDING GEAR ACTUATING SEE FIG. 29	1	
		ATTACHING PARTS		
- 42	AN364-1018	• NUT, SEE FIG. 179-21	REF	
	4M36-05006	• WASHER (MDA)	REF	
	25-41284- 3	• WASHER, MAIN LG ACTUATOR CLAMP UP	REF	
- 43	25-41069- 3	• BOLT, MAIN LANDING GEAR ACTUATOR ATTACHMENT SEE FIG. 178-77	REF	
	25-41070- 3	• WASHER, MAIN LANDING GEAR BEARING RETAINING	REF	
	AN960-1216L	• WASHER	REF	
	AN960-1216	• WASHER	REF	
	AN365-1216	• NUT	REF	
		¤----¤-¤-¤-----¤		
- 44	7M7D4	• SWIVEL ASSEMBLY, HYDRAULIC (MDA)	2	
	AN6290-4	• GASKET, USE WITH INDEX 44	2	
- 45	25-69195-133	• HOSE ASSY, WING FOLD UP	1	
	ER6292-4-19.5	• • HOSE ASSY (WH)	1	
- 46	25-69195-131	• HOSE ASSY, WING FOLD DOWN	1	
	ER6292-4-18.75	• • HOSE ASSY (WH)	1	
- 47	AN924-6D	• NUT	2	
	AN960D916	• WASHER, USE WITH INDEX 47	2	
- 48	25-69340- 3	• SWIVEL ASSEMBLY, AILERON WING FOLD	2	
- 49	AN380-3-5	• • PIN, COTTER	3	
- 50	AN320-6	• • NUT	3	
- 51	AN960D616L	• • WASHER	3	
- 52	25-69228- 1	• • PIN ASSEMBLY, HYDRAULIC SWIVEL	3	
- 53	AN960D816L	• • WASHER	6	
- 54	6144-10	• • RING, BACK UP (SHWS)	12	
- 55	AN6227B10	• • PACKING, O RING	12	
- 56	25-69093- 15	• • LINK ASSEMBLY, HYDRAULIC SWIVEL	1	
- 57	25-69357- 3	• • FITTING, HYDRAULIC SWIVEL END	2	
- 58	25-69341- 1	• • LINK ASSEMBLY, HYDRAULIC SWIVEL	1	
- 59	25-69187- 3	• • • FITTING, HYDRAULIC SWIVEL END	2	
- 60	25-69429-105	• • • TUBE ASSEMBLY, HYDRAULIC SWIVEL LINK	1	
- 61	25-69431- 35	• TUBE ASSY, POWER CONTROL PRESSURE, LEFT SIDE	1	
	25-69431- 37	• TUBE ASSY, POWER CONTROL PRESSURE, RIGHT SIDE	1	
- 62	25-69431- 31	• TUBE ASSY, POWER CONTROL RETURN, LEFT SIDE	1	
	25-69431- 33	• TUBE ASSY, POWER CONTROL RETURN, RIGHT SIDE	1	
	25-69006- 3	HYDRAULIC INSTALLATION, INNER WING LH, AFT, SEE FIG. 15-4 FOR NEXT HIGHER ASSEMBLY	REF	A-B
	25-69006- 5	HYDRAULIC INSTALLATION, INNER WING LH, AFT SEE FIG. 15-4 FOR NEXT HIGHER ASSEMBLY	REF	C-F
	25-69006- 4	HYDRAULIC INSTALLATION, INNER WING RH, AFT, SEE FIG. 15-4 FOR NEXT HIGHER ASSEMBLY	REF	A-B
	25-69006- 6	HYDRAULIC INSTALLATION, INNER WING RH, AFT, SEE FIG. 15-4 FOR NEXT HIGHER ASSEMBLY	REF	C-F
- 63	25-67010- 3	• ACTUATOR ASSEMBLY, WING FLAP, LEFT SIDE, SEE FIG. 31	1	
	25-67010- 5	• ACTUATOR ASSEMBLY, WING FLAP, RIGHT SIDE, SEE FIG. 31	1	
		ATTACHING PARTS		
- 64	NAS464P4A19	• BOLT	1	
	AN960D416L	• WASHER	1	
	AN960D416	• WASHER	2	
	25-69444- 3	• WASHER, FLAP ACTUATOR LAMINATED	1	
	AN364-428	• NUT	1	

FIGURE & INDEX NUMBER	PART NUMBER	1 2 3 4 5 6 7 DESCRIPTION	UNITS PER ASS'Y	USABLE ON CODE
28 -		ATTACHING PARTS (CONT)		
- 65	AN4-20A	• BOLT	1	
	AN960D416L	• WASHER	2	
	AN364-428	• NUT	1	
		¤----¤-¤-¤----¤		
- 66	MS21902D4	• UNION	2	
	AN6290-4	• GASKET, USE WITH INDEX 66	2	
- 67	MS21909D4	• TEE	3	
	AN6289D4	• NUT, USE WITH INDEX 67	3	
	AN6291-4	• RING, BACK UP, USE WITH INDEX 67	3	
	AN6290-4	• GASKET, USE WITH INDEX 67	3	
- 68	AN6277-4	• VALVE	1	
		ATTACHING PARTS		
	AN3-20A	• BOLT	2	
	AN960D10	• WASHER	2	
	NAS43DD3-32	• SPACER	2	
		¤----¤-¤-¤----¤		
- 69	MS21905D4	• TEE	5	
- 70	25-69430- 59	• TUBE ASSEMBLY, LG EMERGENCY AIR, LEFT SIDE	1	
	25-69430- 61	• TUBE ASSEMBLY, LG EMERGENCY AIR, RIGHT SIDE	1	
- 71	25-69430- 35	• TUBE ASSEMBLY, LANDING GEAR DOWN, LEFT SIDE	1	
	25-69430- 37	• TUBE ASSEMBLY, LANDING GEAR DOWN, RIGHT SIDE	1	
- 72	25-69431- 47	• TUBE ASSEMBLY, LANDING GEAR UP, LEFT SIDE	1	
	25-69431- 49	• TUBE ASSEMBLY, LANDING GEAR UP, RIGHT SIDE	1	
- 73	25-69431- 43	• TUBE ASSEMBLY, LANDING GEAR INBOARD DOOR UP, LEFT SIDE	1	
	25-69431- 45	• TUBE ASSEMBLY, LANDING GEAR INBOARD DOOR UP, RIGHT SIDE	1	
- 74	25-69431- 67	• TUBE ASSEMBLY, LANDING GEAR UP, LEFT SIDE	1	
	25-69431- 69	• TUBE ASSEMBLY, LANDING GEAR UP, RIGHT SIDE	1	
- 75	25-69431- 59	• TUBE ASSEMBLY, LANDING GEAR DOWN, LEFT SIDE	1	
	25-69431- 61	• TUBE ASSEMBLY, LANDING GEAR DOWN, RIGHT SIDE	1	
- 76	25-69431- 55	• TUBE ASSEMBLY, LANDING GEAR DOWN, LEFT SIDE	1	
	25-69431- 57	• TUBE ASSEMBLY, LANDING GEAR DOWN, RIGHT SIDE	1	
- 77	MS21902D4	• UNION	7	
- 78	25-69330- 1	• BLOCK ASSY, SIDE BRACE BEAM HYD LINE SUP.	1	
		ATTACHING PARTS		
	AN3-22A	• BOLT	2	
	AN960D10	• WASHER	2	
	NAS43DD3-38	• SPACER	2	
		¤----¤-¤-¤----¤		
- 79	MS21908D4	• ELBOW	6	
	AN924-4D	• NUT, USE WITH INDEX 79	6	
	AN960D716	• WASHER, USE WITH INDEX 79	6	
- 80	25-69195-155	• HOSE ASSY, LANDING GEAR UP	1	
	ER6292-4-15.25	• • HOSE ASSY (WH)	1	
- 81	MS21908D4	• ELBOW	8	
	AN6289D4	• NUT, USE WITH INDEX 81	8	
	AN6291-4	• RING, BACK UP, USE WITH INDEX 81	8	
	AN6290-4	• GASKET, USE WITH INDEX 81	8	
- 82	AN6277-4	• VALVE	1	
		ATTACHING PARTS		
	AN3-31A	• BOLT	2	
	AN960D10	• WASHER	2	
	25-69065- 3	• SPACER, HYDRAULIC SHUTTLE VALVE	1	
		¤----¤-¤-¤----¤		
- 83	MS21907D4	• ELBOW	3	
	AN6289D4	• NUT, USE WITH INDEX 83	3	
	AN6291-4	• RING, BACK UP, USE WITH INDEX 83	3	
	AN6290-4	• GASKET, USE WITH INDEX 83	3	
- 84	25-69195- 41	• HOSE ASSY, LANDING GEAR DOWN	1	
	ER6292-4-10.5	• • HOSE ASSY (WH)	1	
- 85	7M14D4	• SWIVEL ASSY, HYD (MDA)	1	
	AN6289D4	• NUT, USE WITH INDEX 85	1	
	AN6291-4	• RING, BACK UP, USE WITH INDEX 85	1	
	AN6290-4	• GASKET, USE WITH INDEX 85	2	
	ER894D4-4	• ADAPTER (WH) USE WITH INDEX 85	1	
- 86	25-69022-301	• CYLINDER ASSEMBLY, MAIN LANDING GEAR UP LOCK ACTUATING LH, SEE FIG. 29	1	
	25-69022-302	• CYLINDER ASSEMBLY, MAIN LANDING GEAR UP LOCK ACTUATING RH, SEE FIG. 29	1	
		ATTACHING PARTS		
- 87	NAS144-19	• BOLT, SEE FIG. 32-27	REF	
	NAS143-4C	• WASHER	REF	
	AN960D416	• WASHER	REF	
	AN365-428	• NUT	REF	

FIGURE & INDEX NUMBER	PART NUMBER	1 2 3 4 5 6 7 DESCRIPTION	UNITS PER ASS'Y	USABLE ON CODE
28 -		ATTACHING PARTS (CONT)		
- 88	NAS146DH56	• BOLT, SEE FIG. 32-18	REF	
	NAS143-6C	• WASHER	REF	
	4M36-03012	• WASHER (MDA)	REF	
	25-42267- 3	• RETAINER, MAIN LANDING GEAR UP LATCH ACTUATOR BEARING	REF	
	NAS77A6-33P	• BUSHING	REF	
		¤----¤-¤-¤----¤		
- 89	25-69430- 39	• TUBE ASSEMBLY, LANDING GEAR DOWN, LEFT SIDE	1	
	25-69430- 41	• TUBE ASSEMBLY, LANDING GEAR DOWN, RIGHT SIDE	1	
- 90	MS21906D4	• CROSS	1	
- 91	25-69428-107	• TUBE ASSEMBLY, LANDING GEAR DOWN, LEFT SIDE	1	
	25-69428-109	• TUBE ASSEMBLY, LANDING GEAR DOWN, RIGHT SIDE	1	
- 92	AN6280-4	• VALVE	1	
	MS21902D4	• UNION, USE WITH INDEX 92	1	
	AN6290-4	• GASKET, USE WITH INDEX 92	1	
- 93	25-69428-111	• TUBE ASSEMBLY, LANDING GEAR DOWN, LEFT SIDE	1	
	25-69428-113	• TUBE ASSEMBLY, LANDING GEAR DOWN, RIGHT SIDE	1	
- 94	25-69431- 7	• TUBE ASSEMBLY, LANDING GEAR DOWN, LEFT SIDE	1	
	25-69431- 9	• TUBE ASSEMBLY, LANDING GEAR DOWN, RIGHT SIDE	1	
- 95	7M14D4	• SWIVEL ASSY, HYD (MDA)	2	
	AN924-4D	• NUT, USE WITH INDEX 95	2	
- 96	25-69431-107	• TUBE ASSEMBLY, LANDING GEAR DOWN, LEFT SIDE	1	
	25-69431-109	• TUBE ASSEMBLY, LANDING GEAR DOWN, RIGHT SIDE	1	
- 97	25-69431- 79	• TUBE ASSEMBLY, WING FOLD UP, LEFT SIDE	1	
	25-69431- 81	• TUBE ASSEMBLY, WING FOLD DOWN, RIGHT SIDE	1	
- 98	17-100-6-10	• RESTRICTOR (GPPI) LEFT SIDE	1	
	17-100-4-10	• RESTRICTOR (GPPI) RIGHT SIDE	1	
	MS21902D4	• UNION, USE WITH INDEX 98	2	
	AN6290-4	• GASKET, USE WITH INDEX 98	2	
- 99	25-69428- 95	• TUBE ASSEMBLY, WING FOLD UP, LEFT SIDE	1	
	25-69428- 97	• TUBE ASSEMBLY, WING FOLD UP, RIGHT SIDE	1	
-100	25-69428- 99	• TUBE ASSEMBLY, WING FOLD UP, LEFT SIDE	1	
	25-69428-101	• TUBE ASSEMBLY, WING FOLD UP, RIGHT SIDE	1	
-101	25-69428-103	• TUBE ASSEMBLY, WING FOLD UP, LEFT SIDE	1	
	25-69428-105	• TUBE ASSEMBLY, WING FOLD UP, RIGHT SIDE	1	
-102	25-69428- 51	• TUBE ASSEMBLY, WING FOLD UP, LEFT SIDE	1	
	25-69428- 53	• TUBE ASSEMBLY, WING FOLD UP, RIGHT SIDE	1	
-103	MS21907D4	• ELBOW	3	
	AN924-4D	• NUT, USE WITH INDEX 103	3	
	AN960D716	• WASHER, USE WITH INDEX 103	3	
-104	25-69431- 87	• TUBE ASSEMBLY, WING FOLD DOWN, LEFT SIDE	1	
	25-69431- 89	• TUBE ASSEMBLY, WING FOLD UP, RIGHT SIDE	1	
-105	17-100-4-10	• RESTRICTOR (GPPI) LEFT SIDE	1	
	17-100-6-10	• RESTRICTOR (GPPI) RIGHT SIDE	1	
	MS21902D4	• UNION, USE WITH INDEX 105	2	
	AN6290-4	• GASKET, USE WITH INDEX 105	2	
-106	25-69428- 43	• TUBE ASSEMBLY, WING FOLD DOWN, LEFT SIDE	1	
	25-69428- 45	• TUBE ASSEMBLY, WING FOLD DOWN, RIGHT SIDE	1	
-107	25-69627- 7	• TUBE ASSEMBLY, UTILITY RETURN, LEFT SIDE	1	
	25-69627- 9	• TUBE ASSEMBLY, UTILITY RETURN, RIGHT SIDE	1	
-108	AV14C1150	• VALVE, HYDRAULIC SELECTOR SOLENOID (GN) MCDONNELL SPEC 25-69008-78	1	
		ATTACHING PARTS		
	AN4-5A	• BOLT	4	
	AN960D416	• WASHER	4	
		¤----¤-¤-¤----¤		
	MS21907D4	• ELBOW, USE WITH INDEX 108	3	
	AN6289D4	• NUT, USE WITH INDEX 108	3	
	AN6291-4	• RING, BACK UP, USE WITH INDEX 108	3	
	AN6290-4	• GASKET, USE WITH INDEX 108	3	
	AN893-3D	• BUSHING, USE WITH INDEX 108	4	
	AN6290-8	• GASKET, USE WITH INDEX 108	4	
-109	AN893-3D	• BUSHING	1	
	AN6290-8	• GASKET, USE WITH INDEX 109	1	
-110	MS21909D4	• TEE	1	
	AN6289D4	• NUT, USE WITH INDEX 110	1	
	AN6291-4	• RING, BACK UP, USE WITH INDEX 110	1	
	AN6290-4	• GASKET, USE WITH INDEX 110	1	
-111	AN6280-4	• VALVE, HYD CHECK	1	
	AN6290-4	• GASKET, USE WITH INDEX 111	1	
-112	MS21916D8-4	• REDUCER	3	
	AN6290-8	• GASKET, USE WITH INDEX 112	3	
-113	AV14C1138	• VALVE, HYDRAULIC SELECTOR SOLENOID (GN) MCDONNELL SPEC 25-69008-38	1	
		ATTACHING PARTS		
	AN4-5A	• BOLT	4	
	AN960D416	• WASHER	4	
		¤----¤-¤-¤----¤		

FIGURE & INDEX NUMBER	PART NUMBER	1 2 3 4 5 6 7 DESCRIPTION	UNITS PER ASS'Y	USABLE ON CODE
28 -114	25-69431- 99	• TUBE ASSEMBLY, PIN OUT, LEFT SIDE	1	
	25-69431-101	• TUBE ASSEMBLY, PIN OUT, RIGHT SIDE	1	
-115	25-69431- 23	• TUBE ASSEMBLY, PIN OUT, LEFT SIDE	1	
	25-69431- 25	• TUBE ASSEMBLY, PIN OUT, RIGHT SIDE	1	
-116	MS21907D4	• ELBOW	1	
	AN960D716	• WASHER, USE WITH INDEX 116	2	
	AN924-4D	• NUT, USE WITH INDEX 116	1	
-117	25-69195- 39	• HOSE ASSY, PIN OUT	1	
	ER6292-4-8	• • HOSE ASSY (WH)	1	
-118	25-69428- 47	• TUBE ASSEMBLY, PIN IN, LEFT SIDE	1	
	25-69428- 49	• TUBE ASSEMBLY, PIN IN, RIGHT SIDE	1	
-119	25-69428- 55	• TUBE ASSEMBLY, PIN IN, LEFT SIDE	1	
	25-69428- 57	• TUBE ASSEMBLY, PIN IN, RIGHT SIDE	1	
-120	25-69195- 43	• HOSE ASSY, PIN IN	1	
	ER6292-4-11	• • HOSE ASSY (WH)	1	
-121	25-69431-103	• TUBE ASSEMBLY, UTILITY RETURN, LEFT SIDE	1	
	25-69431-105	• TUBE ASSEMBLY, UTILITY RETURN, RIGHT SIDE	1	
-122	25-69428- 87	• TUBE ASSEMBLY, UTILITY RETURN, LEFT SIDE	1	
	25-69428- 89	• TUBE ASSEMBLY, UTILITY RETURN, RIGHT SIDE	1	
-123	25-69428- 91	• TUBE ASSEMBLY, UTILITY RETURN, LEFT SIDE	1	
	25-69428- 93	• TUBE ASSEMBLY, UTILITY RETURN, RIGHT SIDE	1	
-124	AN6245B4	• VALVE, HYD RELIEF	1	
	MS21902D4	• UNION, USE WITH INDEX 124	1	
	AN6290-4	• GASKET, USE WITH INDEX 124	1	
-125	25-69428- 63	• TUBE ASSEMBLY, UTILITY RETURN, LEFT SIDE	1	
	25-69428- 65	• TUBE ASSEMBLY, UTILITY RETURN, RIGHT SIDE	1	
-126	25-69428- 71	• TUBE ASSEMBLY, UTILITY RETURN, LEFT SIDE	1	
	25-69428- 73	• TUBE ASSEMBLY, UTILITY RETURN, RIGHT SIDE	1	
-127	25-69431-115	• TUBE ASSEMBLY, UTILITY RETURN, LEFT SIDE	1	
	25-69431-117	• TUBE ASSEMBLY, UTILITY RETURN, RIGHT SIDE	1	
-128	AN814-4D	• PLUG	1	
	AN6290-4	• GASKET, USE WITH INDEX 128	1	
-129	24900	• VALVE, FOUR WAY SEQUENCE (HYRM) MCDONNELL SPEC 25-69049-1	1	
		ATTACHING PARTS		
	AN502-10-4	• SCREW	3	
		¤----¤-¤-¤----¤		
-130	25-69428- 59	• TUBE ASSEMBLY, LANDING GEAR UP, LEFT SIDE	1	
	25-69428- 61	• TUBE ASSEMBLY, LANDING GEAR UP, RIGHT SIDE	1	
-131	25-69431- 19	• TUBE ASSEMBLY, LANDING GEAR DOOR UP, LEFT SIDE	1	
	25-69431- 21	• TUBE ASSY, LANDING GEAR DOOR UP, RIGHT SIDE	1	
-132	MS21904D4	• ELBOW	1	
-133	25-69430- 75	• TUBE ASSEMBLY, LANDING GEAR DOOR UP, LEFT SIDE	1	
	25-69430- 77	• TUBE ASSY, LANDING GEAR DOOR UP, RIGHT SIDE	1	
-134	25-69431- 15	• TUBE ASSEMBLY, LANDING GEAR UP, LEFT SIDE	1	
	25-69431- 17	• TUBE ASSEMBLY, LANDING GEAR UP, RIGHT SIDE	1	
-135	25-69430- 67	• TUBE ASSEMBLY, LANDING GEAR UP, LEFT SIDE	1	
	25-69430- 69	• TUBE ASSEMBLY, LANDING GEAR UP, RIGHT SIDE	1	
-136	25-69430- 7	• TUBE ASSEMBLY, HYDRAULIC BRAKE, LEFT SIDE	1	
	25-69430- 9	• TUBE ASSEMBLY, HYDRAULIC BRAKE, RIGHT SIDE	1	
-137	MS21907D5	• ELBOW	1	
	AN924-5D	• NUT, USE WITH INDEX 137	1	
-138	25-69427- 3	• TUBE ASSEMBLY, HYDRAULIC BRAKE, LEFT SIDE	1	
	25-69427- 5	• TUBE ASSEMBLY, HYDRAULIC BRAKE, RIGHT SIDE	1	
-139	MS21908D5	• ELBOW	1	
	AN924-5D	• NUT, USE WITH INDEX 139	1	
	AN960D816	• WASHER, USE WITH INDEX 139	1	
-140	AN941D4	• ELBOW	1	
	AN6289D4	• NUT, USE WITH INDEX 140	1	
	AN6291-4	• RING, BACK UP, USE WITH INDEX 140	1	
	AN6290-4	• GASKET, USE WITH INDEX 140	1	
	MS21902D4	• UNION, USE WITH INDEX 140	1	
	AN6290-4	• GASKET, USE WITH INDEX 140	1	
-141	25-69431- 71	• TUBE ASSEMBLY, LANDING GEAR UP, LEFT SIDE	1	
	25-69431- 73	• TUBE ASSEMBLY, LANDING GEAR UP, RIGHT SIDE	1	
-142	25-69431- 75	• TUBE ASSEMBLY, LANDING GEAR UP, LEFT SIDE	1	
	25-69431- 77	• TUBE ASSEMBLY, LANDING GEAR UP, RIGHT SIDE	1	
-143	312515	• VALVE ASSEMBLY (GPC)	1	
		ATTACHING PARTS		
	AN742D22CB	• CLAMP	1	
	NAS229-21	• SCREW	REF	
	AN960D10L	• WASHER	REF	
		¤----¤-¤-¤----¤		
	MS21916D6-4	• REDUCER, USE WITH INDEX 143	2	
	AN6290-6	• GASKET, USE WITH INDEX 143	2	
-144	MS21912D4	• TEE	1	
	AN6289D4	• NUT, USE WITH INDEX 144	1	
	AN6291-4	• RING, BACK UP, USE WITH INDEX 144	1	
	AN6290-4	• GASKET, USE WITH INDEX 144	1	

FIGURE & INDEX NUMBER	PART NUMBER	1 2 3 4 5 6 7 DESCRIPTION	UNITS PER ASS'Y	USABLE ON CODE
28 -145	17-100-27-10	• RESTRICTOR (GPPI)	1	
		ATTACHING PARTS		
	AN742D14CB	• CLAMP	1	
	NAS229-9	• SCREW	1	
	AN960D10L	• WASHER	1	
		¤----¤-¤-¤----¤		
-146	AN939D4	• ELBOW	1	
	AN6289D4	• NUT, USE WITH INDEX 146	1	
	AN6291-4	• RING, BACK UP, USE WITH INDEX 146	1	
	AN6290-4	• GASKET, USE WITH INDEX 146	2	
	MS21902D4	• UNION, USE WITH INDEX 146	1	
	AN6290-4	• GASKET, USE WITH INDEX 146	1	
-147	AN939D4	• ELBOW	1	
	AN6289D4	• NUT, USE WITH INDEX 147	1	
	AN6291-4	• RING, BACK UP, USE WITH INDEX 147	1	
	AN6290-4	• GASKET, USE WITH INDEX 147	2	
-148	AN938D4	• TEE	1	
	MS21902D4	• UNION, USE WITH INDEX 148	1	
	MS21903D4	• UNION, USE WITH INDEX 148	2	
	AN6290-4	• GASKET, USE WITH INDEX 148	3	
-149	25-69430- 99	• TUBE ASSEMBLY, FLAP UP, LEFT SIDE	1	
	25-69430-101	• TUBE ASSEMBLY, FLAP UP, RIGHT SIDE	1	
-150	25-69195-157	• HOSE ASSY, FLAP UP	1	
	ER6292-4-16.50	• • HOSE ASSY (WH)	1	
-151	7M7D4	• SWIVEL ASSY, HYD (MDA)	1	
	AN6290-4	• GASKET, USE WITH INDEX 151	1	
-152	25-69430- 91	• TUBE ASSEMBLY, FLAP DOWN, LEFT SIDE	1	
	25-69430- 93	• TUBE ASSEMBLY, FLAP DOWN, RIGHT SIDE	1	
-153	25-69431- 11	• TUBE ASSEMBLY, FLAP DOWN, LEFT SIDE	1	
	25-69431- 13	• TUBE ASSEMBLY, FLAP DOWN, RIGHT SIDE	1	
-154	25-69195- 47	• HOSE ASSY, FLAP DOWN	1	
	ER6292-4-13	• • HOSE ASSY (WH)	1	
-155	MS21903D6	• UNION	2	
	AN924-6D	• NUT, USE WITH INDEX 155	2	
-156	25-69430-119	• TUBE ASSEMBLY, POWER CONTROL RETURN, LEFT SIDE	1	
	25-69429- 91	• TUBE ASSY, POWER CONTROL RETURN, RIGHT SIDE	1	
-157	MS21902D6	• UNION	2	
-158	25-69429- 93	• TUBE ASSEMBLY, POWER CONTROL RETURN, LEFT SIDE	1	
	25-69429- 95	• TUBE ASSY, POWER CONTROL RETURN, RIGHT SIDE	1	
-159	MS21908D6	• ELBOW	1	
	AN924-6D	• NUT, USE WITH INDEX 159	1	
	AN960D916	• WASHER, USE WITH INDEX 159	1	
-160	25-69429- 97	• TUBE ASSEMBLY, POWER CONTROL RETURN, LEFT SIDE	1	
	25-69429- 99	• TUBE ASSY, POWER CONTROL RETURN, RIGHT SIDE	1	
-161	25-69428- 27	• TUBE ASSY, POWER CONTROL PRESSURE, LEFT SIDE	1	
	25-69428- 29	• TUBE ASSY, POWER CONTROL PRESSURE, RIGHT SIDE	1	
-162	25-69430-111	• TUBE ASSY, POWER CONTROL PRESSURE, LEFT SIDE	1	
	25-69430-113	• TUBE ASSY, POWER CONTROL PRESSURE, RIGHT SIDE	1	
-163	MS21908D6	• ELBOW	1	
	AN924-6D	• NUT, USE WITH INDEX 163	1	
-164	25-69429-101	• TUBE ASSY, POWER CONTROL PRESSURE, LEFT SIDE	1	
	25-69429-103	• TUBE ASSY, POWER CONTROL PRESSURE, RIGHT SIDE	1	

Inner Wing

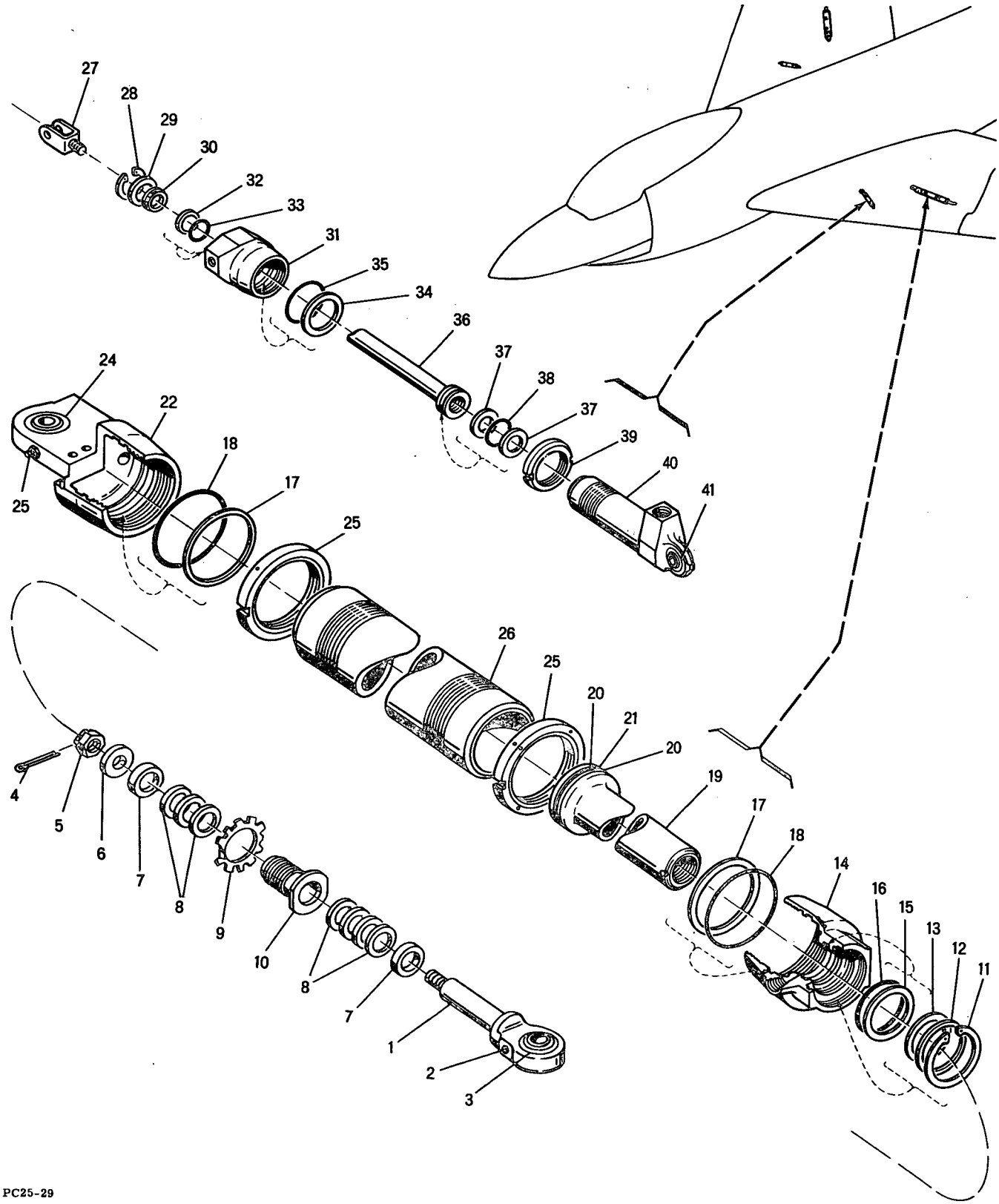

Figure 29 -- Main Landing Gear Actuating, and Up Lock Actuating Cylinder Assemblies

FIGURE & INDEX NUMBER	PART NUMBER	1 2 3 4 5 6 7 DESCRIPTION	UNITS PER ASS'Y	USABLE ON CODE
29 -	25-69018-307	CYLINDER ASSEMBLY, MAIN LANDING GEAR ACTUATING, SEE FIG. 28-41 FOR NEXT HIGHER ASSEMBLY	REF	
- 1	25-69202-301	. ROD END ASSEMBLY, MAIN LANDING GEAR ACTUATOR PISTON	1	
- 2	NAS497	. . FITTING, LUB	1	
- 3	H5SB14-1	. . BEARING (HLF)	1	
- 4	AN380-3-4	. PIN, COTTER	1	
- 5	AN310-6	. NUT	1	
- 6	4M36-03019	. WASHER (MDA)	1	
- 7	25-69328- 3	. SPACER, MAIN LANDING GEAR ACTUATOR ROD END	2	
- 8	4M36-05005	. WASHER (MDA)	AR	
- 9	25-69183- 3	. WASHER, MAIN LANDING GEAR ACTUATOR TAB TYPE	1	
- 10	25-69055- 3	. BUSHING, MAIN LANDING GEAR ACTUATOR PISTON	1	
- 11	NAS50-193	. RING, INTERNAL RETAINER	1	
- 12	4M36-14003	. WASHER (MDA)	1	
- 13	AN6231A15	. SCRAPER	1	
- 14	25-69176- 5	. CAP, MAIN LANDING GEAR ACTUATING CYLINDER	1	
- 15	6144-25	. RING, BACK UP (SHWS)	1	
- 16	AN6227B25	. PACKING, O RING	1	
- 17	AN6244-7	. RING, BACK UP	2	
- 18	AN6230B7	. GASKET, O RING	2	
- 19	25-69180-301	. PISTON ASSEMBLY, MAIN LANDING GEAR ACTUATOR	1	
- 20	6144-29	. RING, BACK UP (SHWS)	2	
- 21	AN6227B29	. PACKING, O RING	1	
- 22	25-69190-301	. CAP ASSY, MAIN LANDING GEAR ACTUATING CYLINDER	1	
- 23	AN944-101	. . FITTING, LUB	1	
- 24	BSR12000G-C	. . BEARING (SWPC)	1	
- 25	20-91232- 3	. NUT, CYLINDER LOCK, ALTERNATE 25-69179-3	2	
- 26	25-69178- 9	. BARREL, MAIN LANDING GEAR ACTUATOR	1	
	25-69022-301	CYLINDER ASSY, MAIN LANDING GEAR UP LOCK ACTUATING LH, SEE FIG. 28-86 FOR NEXT HIGHER ASSEMBLY	REF	
	25-69022-302	CYLINDER ASSY, MAIN LANDING GEAR UP LOCK ACTUATING RH, SEE FIG. 28-86 FOR NEXT HIGHER ASSEMBLY	REF	
- 27	25-69136- 3	. ROD END, MAIN LANDING GEAR UP LOCK ACTUATOR	1	
- 28	NAS50-87	. RING, INTERNAL RETAINER	1	
- 29	4M36-05008	. WASHER (MDA)	1	
- 30	AN6231A1	. SCRAPER	1	
- 31	25-69135- 5	. CAP, MAIN LANDING GEAR UP LOCK ACTUATOR END	1	
- 32	6144-10	. RING, BACK UP (SHWS)	1	
- 33	AN6227B10	. PACKING, O RING	1	
- 34	AN6246-20	. RING, BACK UP	1	
- 35	AN6227B20	. PACKING, O RING	1	
- 36	25-69134- 5	. PISTON, MAIN LANDING GEAR UP LOCK ACTUATOR	1	
- 37	6144-13	. RING, BACK UP (SHWS)	2	
- 38	AN6227B13	. PACKING, O RING	1	
- 39	25-69132- 3	. NUT, MAIN LANDING GEAR UP LOCK ACTUATOR LOCK	1	
- 40	25-69133- 7	. BARREL ASSEMBLY, MAIN LG UP LOCK ACTUATOR	1	
	NAS516-1	. . FITTING, LUB	1	
- 41	BSSN6003G	. . BEARING (SWPC)	1	

Inner Wing

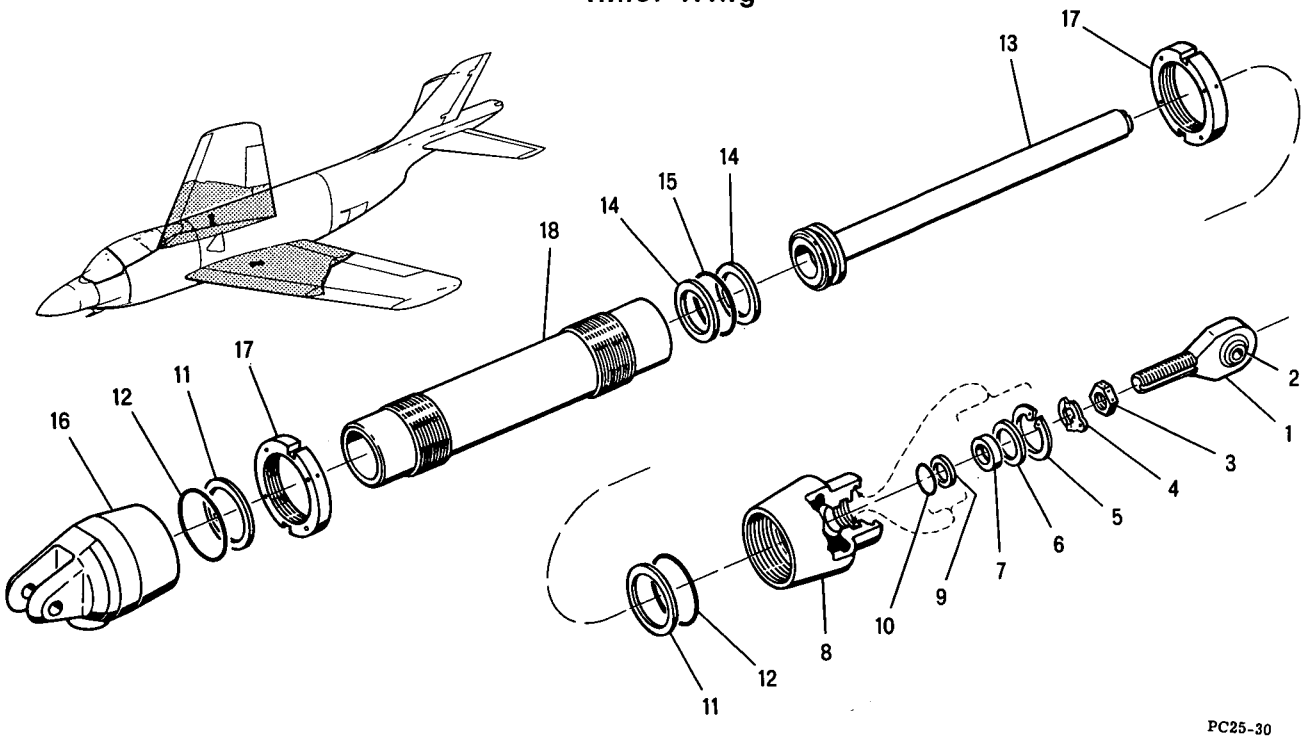

Figure 30 - Main Landing Gear Door Actuating Cylinder Assembly

FIGURE & INDEX NUMBER	PART NUMBER	1 2 3 4 5 6 7 DESCRIPTION	UNITS PER ASS'Y	USABLE ON CODE
30 -	25-69020- 1	CYLINDER ASSY, MAIN LANDING GEAR DOOR ACTUATING, SEE FIG. 28-33 FOR NEXT HIGHER ASSEMBLY	REF	
- 1	25-69175- 1	• ROD END ASSY, MAIN LANDING GEAR DOOR ACTUATOR	1	
	NAS497	• • FITTING, LUB	1	
- 2	BSR5000G-C	• • BEARING (SWPC)	1	
- 3	9M104-6	• NUT, JAM (MDA)	1	
- 4	9M103-6	• WASHER, LOCK (MDA)	1	
- 5	NAS50-106	• RING, INTERNAL RETAINER	1	
- 6	4M36-06007	• WASHER (MDA)	1	
- 7	AN6231A3	• SCRAPER	1	
- 8	25-69171- 3	• CAP, MAIN LANDING GEAR DOOR ACTUATOR	1	
- 9	6144-12	• RING, BACK UP (SHWS)	1	
- 10	AN6227B12	• PACKING, O RING	1	
- 11	AN6246-24	• RING, BACK UP	2	
- 12	AN6227B24	• PACKING, O RING	2	
- 13	25-69173- 3	• PISTON, MAIN LANDING GEAR DOOR ACTUATOR	1	
- 14	6144-17	• RING, BACK UP (SHWS)	2	
- 15	AN6227B17	• PACKING, O RING	1	
- 16	25-69171- 5	• CAP, MAIN LANDING GEAR DOOR ACTUATOR	1	
- 17	25-69174- 3	• NUT, MAIN LANDING GEAR DOOR ACTUATOR LOCK	2	
	25-89026- 3	• NAMEPLATE, MAIN LANDING GEAR DOOR ACTUATOR	1	
- 18	25-69172- 3	• BARREL, MAIN LANDING GEAR DOOR ACTUATOR	1	

Inner Wing

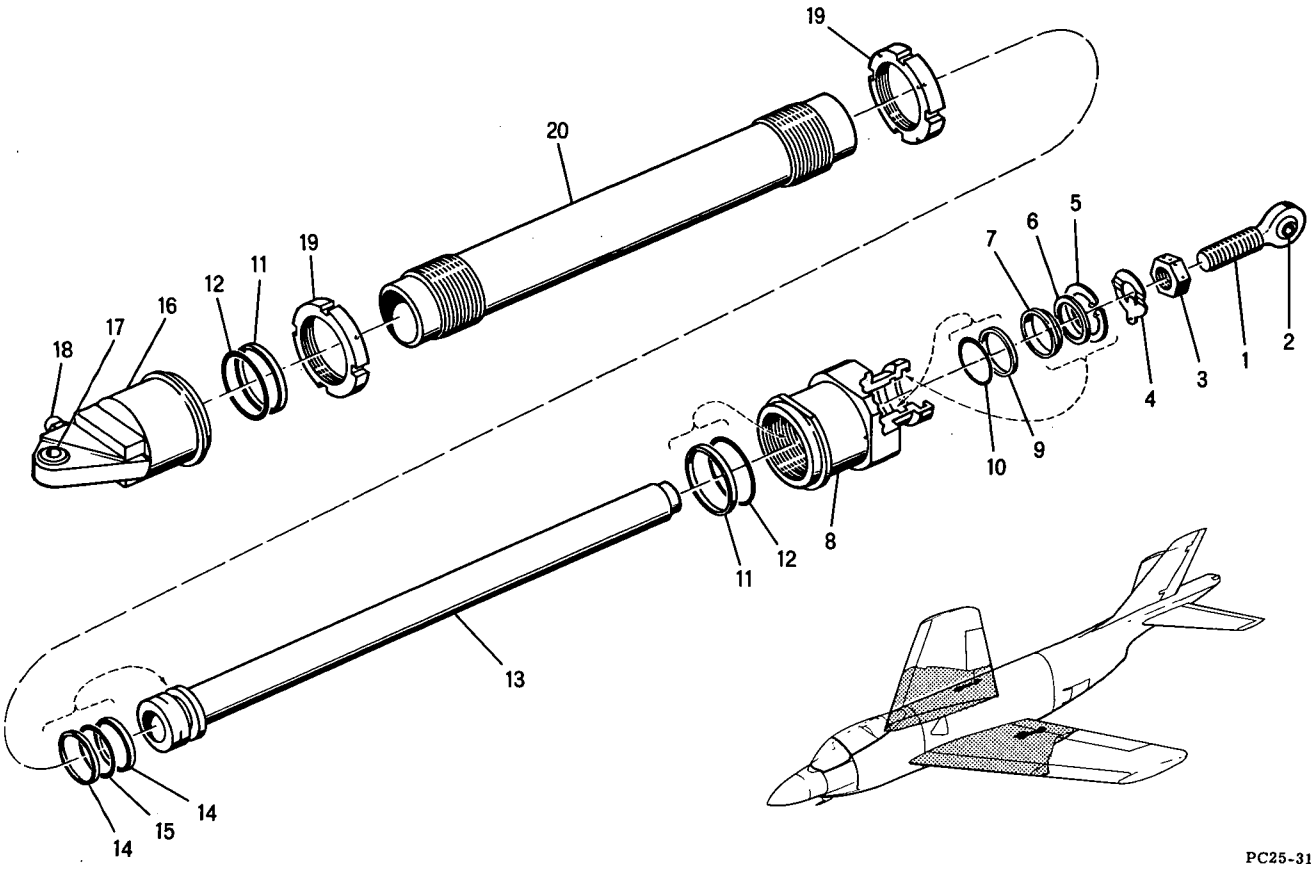

Figure 31 - Wing Flap Actuator Assembly

FIGURE & INDEX NUMBER	PART NUMBER	1 2 3 4 5 6 7 DESCRIPTION	UNITS PER ASS'Y	USABLE ON CODE
31 -	25-67010- 3	ACTUATOR ASSEMBLY, WING FLAP, LEFT SIDE, SEE FIG. 28-63 FOR NEXT HIGHER ASSEMBLY	REF	
	25-67010- 5	ACTUATOR ASSEMBLY, WING FLAP, RIGHT SIDE, SEE FIG. 28-63 FOR NEXT HIGHER ASSEMBLY	REF	
- 1	25-67016- 1	• END ASSEMBLY, WING FLAP ACTUATOR	1	
	NAS497	• • FITTING, LUB	1	
- 2	BSSR4000G	• • BEARING (SWPC)	1	
- 3	9M104-10	• NUT, JAM (MDA)	1	
- 4	9M103-10	• WASHER, LOCK (MDA)	1	
- 5	NAS50-137	• RING, INTERNAL RETAINER	1	
- 6	4M36-10006	• WASHER (MDA)	1	
- 7	AN6231A7	• SCRAPER	1	
- 8	25-67013- 3	• CAP, WING FLAP ACTUATOR	1	
- 9	6144-17	• RING, BACK UP (SHWS)	1	
- 10	AN6227B17	• PACKING, O RING	1	
- 11	AN6246-27	• RING, BACK UP	2	
- 12	AN6227B27	• PACKING, O RING	2	
- 13	25-67015- 5	• PISTON, WING FLAP ACTUATOR	1	
- 14	6144-19	• RING, BACK UP (SHWS)	2	
- 15	AN6227B19	• PACKING, O RING	1	
- 16	25-67011- 1	• CAP ASSY, WING FLAP ACTUATOR	1	
- 17	BSSR4000G	• • BEARING (SWPC)	1	
- 18	AN944-301	• • FITTING, LUB	1	
- 19	25-67017- 3	• NUT, WING FLAP ACTUATOR LOCK	2	
	25-89018- 5	• NAMEPLATE, WING FLAP ACTUATOR, LEFT SIDE	1	
	25-89018- 7	• NAMEPLATE, WING FLAP ACTUATOR, RIGHT SIDE	1	
- 20	25-67014- 3	• BARREL, WING FLAP ACTUATOR	1	

Inner Wing

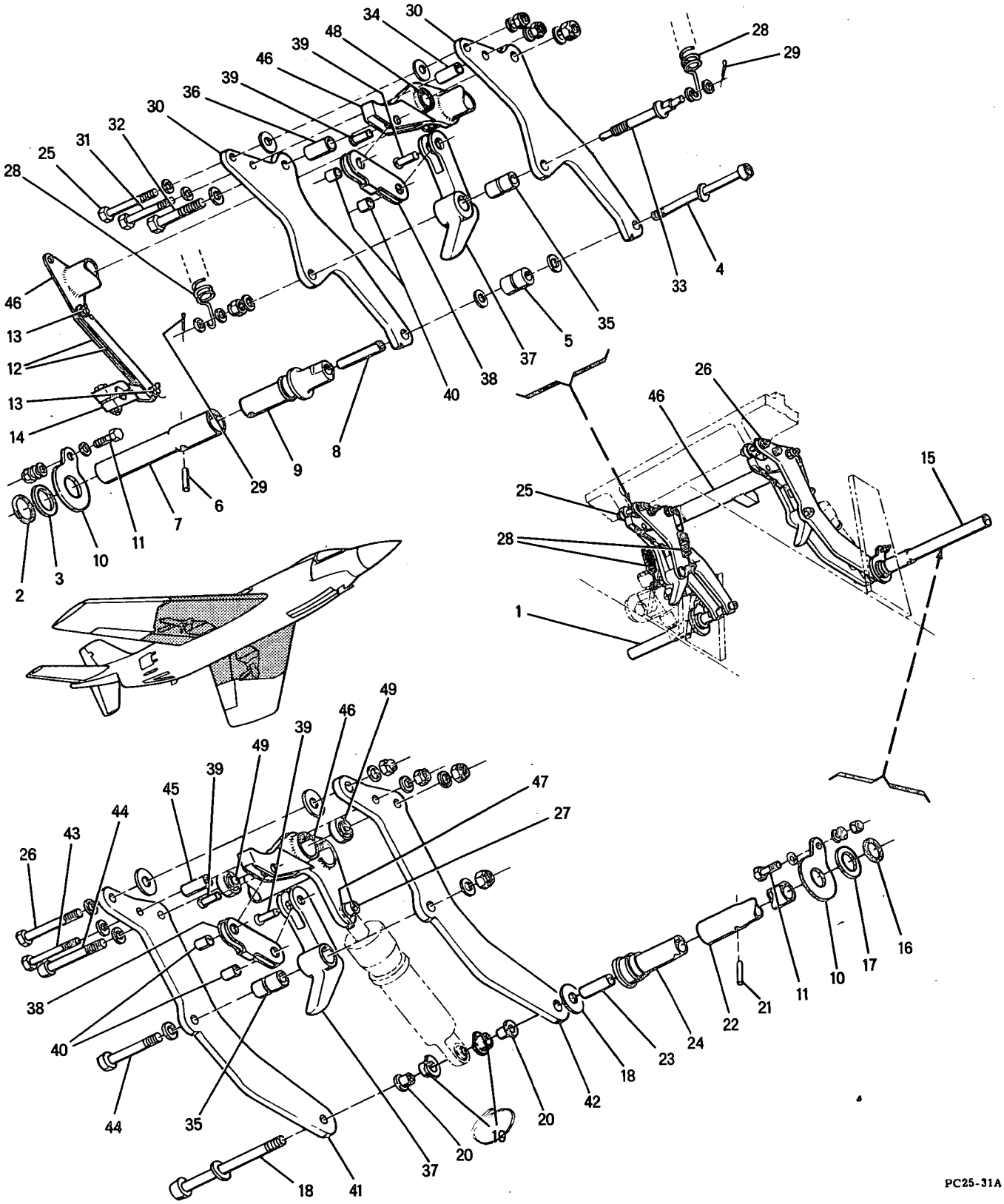

Figure 32 -- Main Landing Gear Up Latch Assembly

FIGURE & INDEX NUMBER	PART NUMBER	1 2 3 4 5 6 7 DESCRIPTION	UNITS PER ASS'Y	USABLE ON CODE
32 -	25-42250- 1	LATCH ASSEMBLY, MAIN LANDING GEAR UP LH, SEE FIG. 15-10 FOR NEXT HIGHER ASSEMBLY	REF	
	25-42250- 2	LATCH ASSEMBLY, MAIN LANDING GEAR UP RH, SEE FIG. 15-10 FOR NEXT HIGHER ASSEMBLY	REF	
- 1	25-42259- 1	. FITTING ASSY, MAIN LG UP LATCH AFT SUPPORT	1	
		ATTACHING PARTS		
- 2	RS98	. RING, RETAINING (RMS)	1	
- 3	AN960D1616L	. WASHER	1	
- 4	NAS145DH59	. BOLT	1	
	NAS143-5C	. WASHER	1	
	AN960D516	. WASHER	2	
- 5	NAS74A5-012	. BUSHING	1	
		¤----¤-¤-¤----¤		
- 6	52-028-125-0938	. . PIN, ROLL (EN)	1	
- 7	25-42259- 5	. . TUBE	1	
- 8	4M33-5-124	. . BUSHING (MDA)	1	
	1191-5CNX5/8	. . INSERT (AF)	1	
- 9	25-42259- 3	. . FITTING	1	
- 10	25-42262- 3	. LINK, MAIN LANDING GEAR UP LATCH FLOATING SUP.	2	
		ATTACHING PARTS		
- 11	AN4-6A	. BOLT	2	
	AN960D416L	. WASHER	2	
	AN960D416	. WASHER	4	
	AN365-428	. NUT	2	
		¤----¤-¤-¤----¤		
- 12	25-42265- 3	. LINK, MAIN LG UP LATCH SEQUENCE VALVE	2	
		ATTACHING PARTS		
- 13	AN393-13	. PIN, FLAT HEAD	2	
	AN380-2-1	. PIN, COTTER	2	
		¤----¤-¤-¤----¤		
- 14	25-42264- 1	. ARM ASSY, MAIN LG UP LATCH SEQUENCE VALVE	1	
- 15	25-42260- 1	. FITTING ASSY, MAIN LG UP LATCH FORWARD SUPPORT	1	
		ATTACHING PARTS		
- 16	RS98	. RING, RETAINING (RMS)	1	
- 17	AN960D1616L	. WASHER	1	
- 18	NAS146DH56	. BOLT	1	
	NAS143-6C	. WASHER	1	
	4M36-03012	. WASHER (MDA)	1	
- 19	25-42267- 3	. RETAINER, MAIN LG UP LATCH ACTUATOR BEARING	2	
- 20	NAS77A6-33P	. BUSHING	2	
		¤----¤-¤-¤----¤		
- 21	52-028-125-0875	. . PIN, ROLL (EN)	1	
- 22	25-42260- 9	. . TUBE	1	
- 23	4M33-6-106	. . BUSHING (MDA)	1	
	1191-6CNX9/16	. . INSERT (AF)	1	
- 24	25-42260- 7	. . FITTING	1	
	25-42250- 3	. LATCH ASSEMBLY, MAIN LANDING GEAR UP LH	1	
	25-42250- 4	. LATCH ASSEMBLY, MAIN LANDING GEAR UP RH	1	
		ATTACHING PARTS		
- 25	AN4-16A	. BOLT	1	
	AN960D416L	. WASHER	1	
	4M36-02014	. WASHER (MDA)	2	
	AN960D416	. WASHER	1	
	AN365-428	. NUT	1	
- 26	AN5-17A	. BOLT	1	
	AN960D516L	. WASHER	1	
	4M36-02026	. WASHER (MDA)	2	
	AN960D516	. WASHER	1	
	AN365-524	. NUT	1	
- 27	NAS144-19	. BOLT	1	
	NAS143-4C	. WASHER	1	
	AN960D416	. WASHER	2	
	AN365-428	. NUT	1	
		¤----¤-¤-¤----¤		
- 28	25-42258- 3	. . SPRING, MAIN LG UP LATCH OVERCENTER EXTENSION	2	
		ATTACHING PARTS		
- 29	AN380-2-3	. . PIN, COTTER	2	
	AN960D416	. . WASHER	4	
		¤----¤-¤-¤----¤		

FIGURE & INDEX NUMBER	PART NUMBER	1 2 3 4 5 6 7 DESCRIPTION	UNITS PER ASS'Y	USABLE ON CODE
32 - 30	25-42257- 3	• • BEAM, MAIN LANDING GEAR UP LATCH AFT	2	
		ATTACHING PARTS		
- 31	AN4-16A	• • BOLT	1	
	AN960D416L	• • WASHER	1	
	AN960D416	• • WASHER	1	
	AN365-428	• • NUT	1	
- 32	AN5-16A	• • BOLT	1	
	AN960D516L	• • WASHER	1	
	AN960D516	• • WASHER	1	
	AN365-524	• • NUT	1	
- 33	25-42256- 3	• • BOLT, MAIN LG UP LATCH OVERCENTER SPRING	1	
	AN960D516	• • WASHER	1	
	AN365-524	• • NUT	1	
		¤----¤-¤-¤----¤		
- 34	NAS75-4-028	• • BUSHING	1	
- 35	NAS72-5-014	• • BUSHING	2	
- 36	25-42266- 3	• • BUSHING, MAIN LG UP LATCH MECH CLAMP UP	1	
- 37	25-42252- 1	• • HOOK ASSEMBLY, MAIN LG STRUT DOOR LATCH	2	
	NAS497	• • • FITTING, LUB	1	
- 38	25-42253- 3	• • LINK, MAIN LANDING GEAR UP LATCH OVERCENTER	2	
		ATTACHING PARTS		
- 39	25-42261- 3	• • PIN, MAIN LG UP LATCH OVERCENTER LINK	4	
		¤----¤-¤-¤----¤		
- 40	25-42263- 3	• • BUSHING, MAIN LG UP LATCH OVERCENTER LINK	4	
- 41	25-42254- 3	• • BEAM, MAIN LANDING GEAR UP LATCH FORWARD, LEFT SIDE AFT, RIGHT SIDE FORWARD	1	
- 42	25-42254- 4	• • BEAM, MAIN LANDING GEAR UP LATCH FORWARD, LEFT SIDE FORWARD, RIGHT SIDE AFT	1	
		ATTACHING PARTS		
- 43	AN4-17A	• • BOLT	1	
	AN960D416L	• • WASHER	1	
	AN960D416	• • WASHER	1	
	AN365-428	• • NUT	1	
- 44	NAS145-33	• • BOLT	2	
	NAS143-5C	• • WASHER	2	
	AN960D516	• • WASHER	2	
	AN365-524	• • NUT	2	
		¤----¤-¤-¤----¤		
45	NAS75-4-028	• • BUSHING	1	
- 46	25-42251- 1	• • TUBE ASSEMBLY, MAIN LG UP LATCH TORQUE LH	1	
	25-42251- 2	• • TUBE ASSEMBLY, MAIN LG UP LATCH TORQUE RH	1	
- 47	BSSN4003	• • • BEARING (SWPC)	1	
- 48	GB812	• • • BEARING (TOR)	1	
- 49	5NBC713ZP	• • • BEARING (TOR) ALTERNATE AT5 (TOR)	2	

Inner Wing

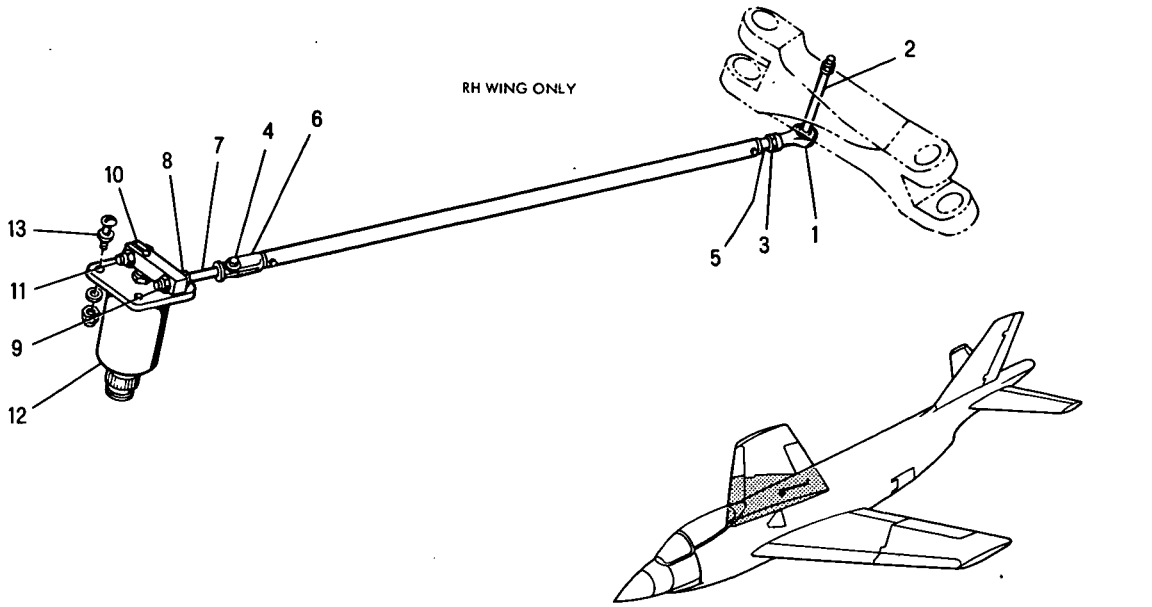

Figure 33 -- Wing Flap Position Transmitter Installation

FIGURE & INDEX NUMBER	PART NUMBER	1 2 3 4 5 6 7 DESCRIPTION	UNITS PER ASS'Y	USABLE ON CODE
33 -	25-75068- 1	TRANSMITTER INSTALLATION, WING FLAP POSITION, RIGHT WING ONLY, SEE FIG. 14-106 FOR NEXT HIGHER ASSEMBLY	REF	
- 1	REB3N	• BEARING, ROD END (FAF)	1	
		ATTACHING PARTS		
- 2	AN3-32A	• BOLT	1	
	AN960-10	• WASHER	1	
	AN960D10	• WASHER	2	
	AN365-1032	• NUT	1	
		¤----¤-¤-¤----¤		
- 3	AN316-4R	• NUT	1	
	25-75055-301	• ROD ASSEMBLY, FLAP POSITION TRANSMITTER	1	
		ATTACHING PARTS		
- 4	AN393-13	• PIN, FLAT HEAD	1	
	AN960-10L	• WASHER	1	
	AN960-10	• WASHER	1	
	AN380-2-1	• PIN, COTTER	1	
		¤----¤-¤-¤----¤		
- 5	AN490HT6P	• • ROD END, THREADED	1	
- 6	AN481-4P	• • CLEVIS, ROD END	1	
- 7	25-75059- 3	• BOLT, FLAP POSITION TRANSMITTER EYE, ALTERED FROM GOVERNMENT STANDARD PART NO. AN42-25A	1	
- 8	AN315-3R	• NUT	1	
- 9	AN364-1032	• NUT	1	
- 10	25-75053- 3	• CRANK, FLAP POSITION TRANSMITTER	1	
		ATTACHING PARTS		
- 11	AN3-6A	• BOLT	1	
	AN960D10L	• WASHER	2	
	AN364-1032	• NUT	1	
		¤----¤-¤-¤----¤		
- 12	R88T2650-000	• TRANSMITTER, AN5785-1, AN 05-55A-14, AN 05-55C-2, GFP	1	
		ATTACHING PARTS		
- 13	AN515-6R10	• SCREW	4	
	AN960D6L	• WASHER	4	
		¤----¤-¤-¤----¤		

Inner Wing

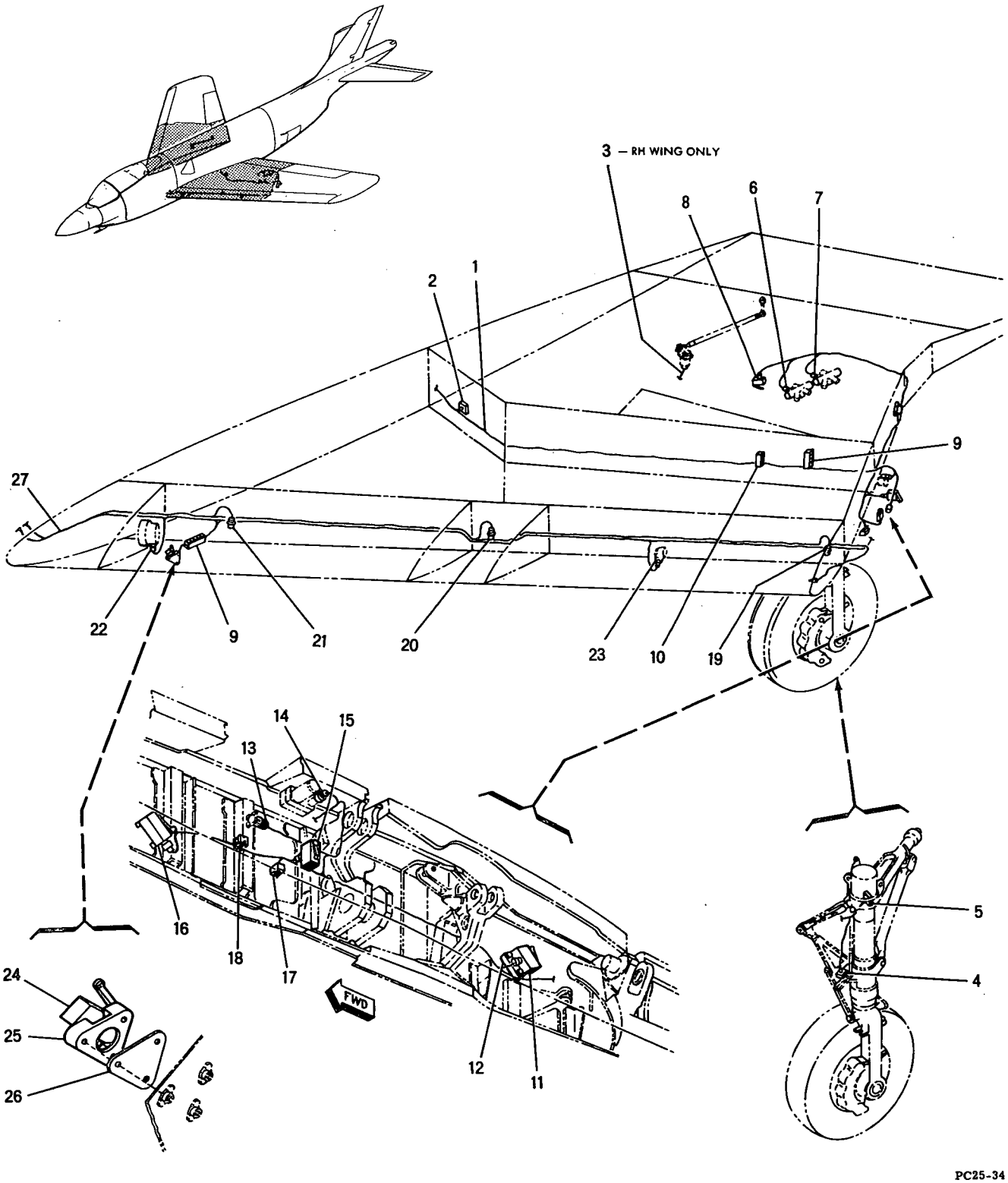

Figure 34 -- Inner Wing Wiring Installation

FIGURE & INDEX NUMBER	PART NUMBER	1 2 3 4 5 6 7 DESCRIPTION	UNITS PER ASS'Y	USABLE ON CODE
34 -	25-75000- 1	WIRING INSTL, INNER WING LH, SEE FIG. 15-7 FOR NEXT HIGHER ASSY	REF	A-B
	25-75000-301	WIRING INSTL, INNER WING LH, SEE FIG. 15-7 FOR NEXT HIGHER ASSY	REF	C-F
	25-75000- 2	WIRING INSTL, INNER WING RH, SEE FIG. 15-7 FOR NEXT HIGHER ASSY	REF	A-B
	25-75000-302	WIRING INSTL, INNER WING RH, SEE FIG. 15-7 FOR NEXT HIGHER ASSY	REF	C-F
- 1	25-79000- 40	• BUNDLE ASSEMBLY, WIRE, LEFT SIDE	1	
	25-79000- 42	• BUNDLE ASSEMBLY, WIRE, RIGHT SIDE	1	
- 2	H203G	• • SWITCH (EXS) MAIN GEAR UP LOCK	1	
	25-79000-D201	• BUNDLE ASSEMBLY, WIRE, RIGHT SIDE ONLY	1	
- 3	3106BS14S2S	• • PLUG (CED) FLAP POSITION TRANSMITTER, USE WITH MS29513-14 O RING	1	
	25-79000-171	• BUNDLE ASSEMBLY, WIRE, LEFT SIDE	1	A-B
	25-79000-A171	• BUNDLE ASSEMBLY, WIRE, LEFT SIDE	1	C-F
	25-79000-173	• BUNDLE ASSEMBLY, WIRE, RIGHT SIDE	1	A-B
	25-79000-A173	• BUNDLE ASSEMBLY, WIRE, RIGHT SIDE	1	C
-	HS5	• • SWITCH (EXS) MAIN GEAR SCISSORS	1	A-B
- 5	HS5	• • SWITCH (EXS) MAIN GEAR DOWN LOCK	1	A-B
	25-79000-D54	• BUNDLE ASSEMBLY, WIRE, LEFT SIDE	1	A
	25-79000-F54	• BUNDLE ASSEMBLY, WIRE, LEFT SIDE	1	B-C
	25-79000-G56	• BUNDLE ASSEMBLY, WIRE, RIGHT SIDE	1	A
	25-79000-H56	• BUNDLE ASSEMBLY, WIRE, RIGHT SIDE	1	B-C
- 6	3106BS10SL3S	• • PLUG (CED) WING FOLD VALVE, USE WITH MS29513-12 O RING	1	
- 7	3106BS10SL3S	• • PLUG (CED) PIN PULL VALVE, USE WITH MS29513-12 O RING	1	
- 8	HS5	• • SWITCH (EXS) MAIN GEAR UP POSITION	1	
- 9	5M7-10-3	• PANEL ASSEMBLY, ELECTRICAL CONNECTOR (MDA)	2	
	5M8-10-3	• COVER, PANEL ASSEMBLY (MDA) USE WITH INDEX 9	2	
- 10	5M7-10-2	• PANEL ASSEMBLY, ELECTRICAL CONNECTOR (MDA)	1	
	5M8-10-2	• COVER, PANEL ASSEMBLY (MDA) USE WITH INDEX 10	1	
	25-79000-C86	• BUNDLE ASSEMBLY, WIRE, LEFT SIDE	1	A
	25-79000-D86	• BUNDLE ASSEMBLY, WIRE, LEFT SIDE	1	B-C
	25-79000-C88	• BUNDLE ASSEMBLY, WIRE, RIGHT SIDE	1	A
	25-79000-D88	• BUNDLE ASSEMBLY, WIRE, RIGHT SIDE	1	B-C
- 11	HS5	• • SWITCH (EXS) PIN OUT LIMIT	1	
- 12	25-75061- 3	• SPACER, PIN OUT LIMIT SWITCH	1	
	25-79000-B44	• BUNDLE ASSEMBLY, WIRE, LEFT SIDE	1	A-C
	25-79000-B46	• BUNDLE ASSEMBLY, WIRE, RIGHT SIDE	1	A-C
- 13	AN3106M22-14S	• • PLUG, USE WITH MS29513-22 O RING	1	
- 14	3106BS14S2S	• • PLUG (CED) WING TANK PURGE VALVE, USE WITH MS29513-14 O RING	1	
- 15	HS5	• • SWITCH (EXS) WING DOWN LIMIT	1	
- 16	H203G	• • SWITCH (EXS) SAFETY PIN OUT LIMIT	1	
- 17	AN3021-1	• SWITCH, WING DOWN	1	A-C
- 18	5M7-10-1	• PANEL ASSEMBLY, ELECTRICAL CONNECTOR (MDA)	1	
	5M8-10-1	• COVER, PANEL ASSEMBLY (MDA) USE WITH INDEX 18	1	
	25-79000-A187	• BUNDLE ASSEMBLY, WIRE, LEFT SIDE	1	A-B
	25-79000-B187	• BUNDLE ASSEMBLY, WIRE, LEFT SIDE	1	C-F
	25-79000-A189	• BUNDLE ASSEMBLY, WIRE, RIGHT SIDE	1	A-B
	25-79000-B189	• BUNDLE ASSEMBLY, WIRE, RIGHT SIDE	1	C-F
- 19	AN3107-20-27S	• • PLUG, USE WITH MS29513-20 O RING & AN3057-12A ADAPTER	1	
	25-79000-273	• BUNDLE ASSEMBLY, WIRE, LEFT SIDE	1	A-B
	25-79000-A273	• BUNDLE ASSEMBLY, WIRE, LEFT SIDE	1	C-F
	25-79000-275	• BUNDLE ASSEMBLY, WIRE, RIGHT SIDE	1	A-B
	25-79000-A275	• BUNDLE ASSEMBLY, WIRE, RIGHT SIDE	1	C-F
- 20	AN3107-20-27S	• • PLUG, USE WITH MS29513-20 O RING & AN3057-12A ADAPTER	1	
	25-79000-269	• BUNDLE ASSEMBLY, WIRE, LEFT SIDE	1	A-B
	25-79000-A269	• BUNDLE ASSEMBLY, WIRE, LEFT SIDE	1	C-F
	25-79000-271	• BUNDLE ASSEMBLY, WIRE, RIGHT SIDE	1	A-B
	25-79000-A271	• BUNDLE ASSEMBLY, WIRE, RIGHT SIDE	1	C-F
- 21	AN3107-20-27S	• • PLUG, USE WITH MS29513-20 O RING & AN3057-12A ADAPTER	1	
	25-79000-191	• BUNDLE ASSEMBLY, WIRE, LEFT SIDE	1	A-B
	25-79000-A191	• BUNDLE ASSEMBLY, WIRE, LEFT SIDE	1	C-F
	25-79000-193	• BUNDLE ASSEMBLY, WIRE, RIGHT SIDE	1	A-B
	25-79000-A193	• BUNDLE ASSEMBLY, WIRE, RIGHT SIDE	1	C-F
- 22	3106BS10SL3S	• • PLUG (CED) 6PS1 FUEL PRESSURE DIFFERENTIAL SWITCH, USE WITH MS29513-12 O RING	1	
- 23	3106BS12S3S	• • PLUG (CED) WING FUEL VENT SOLENOID VALVE, USE WITH MS29513-14 O RING	1	
- 24	HS5	• • SWITCH (EXS) SLAT IN LIMIT, LEFT SIDE ONLY	1	
- 25	25-11197- 3	• SPACER, SLAT IN INDICATOR SWITCH	1	
- 26	25-75063- 3	• SHIM, SLAT IN LIMIT SWITCH	1	
- 27	25-79000-194	• BUNDLE ASSEMBLY, WIRE, LEFT SIDE ONLY	1	
	S1789-1177P1	• • CABLE, COAXIAL (RAY) 14 FT LONG	1	

Inner Wing

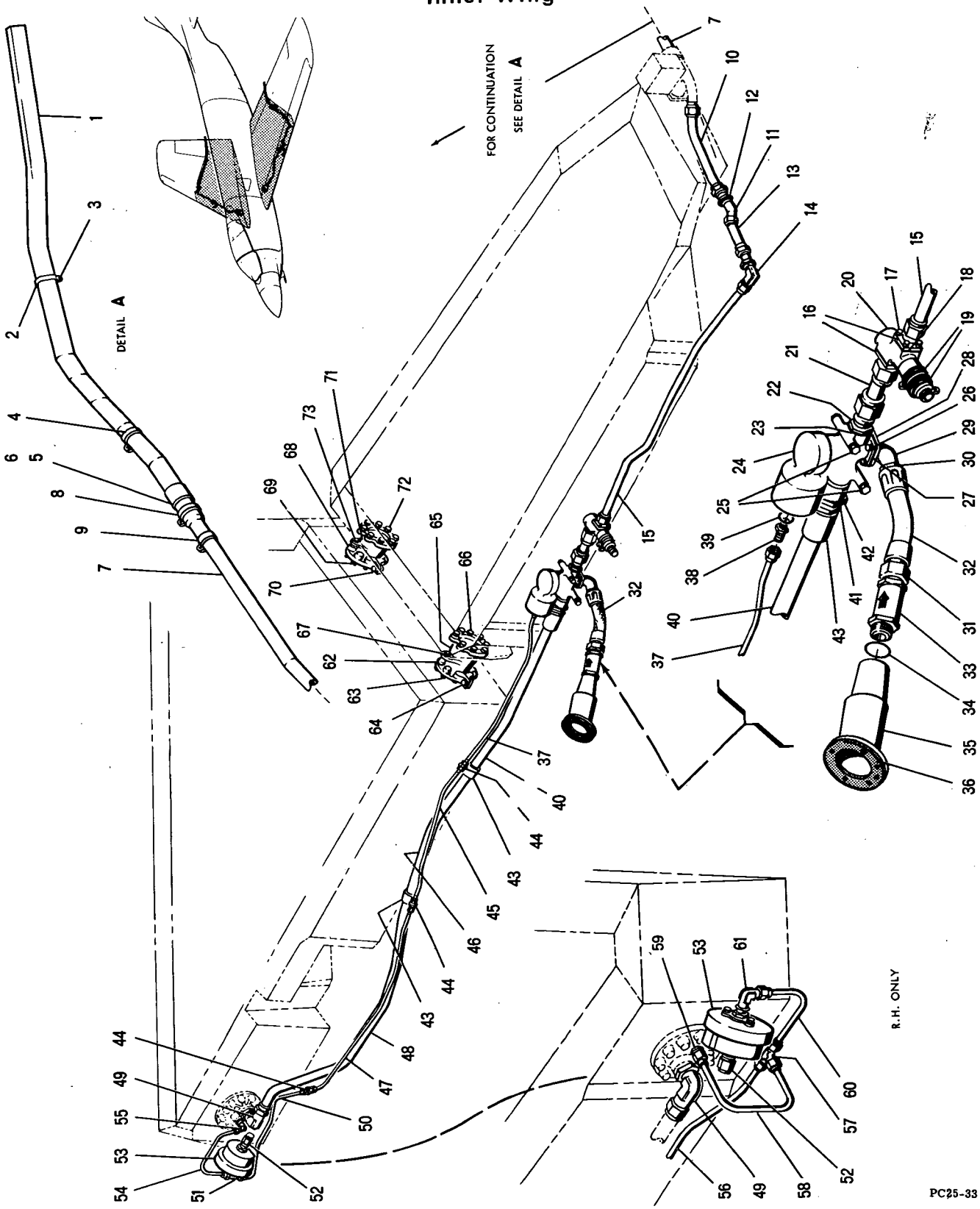

Figure 35 -- Inner Wing Fuel System Installation

FIGURE & INDEX NUMBER	PART NUMBER	1 2 3 4 5 6 7 DESCRIPTION	UNITS PER ASS'Y	USABLE ON CODE
35 -	25-58009- 3	SYSTEM INSTALLATION, INNER WING FUEL LH, SEE FIG. 15-3 FOR NEXT HIGHER ASSEMBLY	REF	A
	25-58009-303	SYSTEM INSTALLATION, INNER WING FUEL LH, SEE FIG. 15-3 FOR NEXT HIGHER ASSEMBLY	REF	B-C
	25-58009- 4	SYSTEM INSTALLATION, INNER WING FUEL RH, SEE FIG. 15-3 FOR NEXT HIGHER ASSEMBLY	REF	A
	25-58009-304	SYSTEM INSTALLATION, INNER WING FUEL RH, SEE FIG. 15-3 FOR NEXT HIGHER ASSEMBLY	REF	B-C
- 1	25-58184- 1	• TUBE ASSEMBLY, FUEL EMERGENCY DUMP LINE LH	1	A-C
	25-58184- 2	• TUBE ASSEMBLY, FUEL EMERGENCY DUMP LINE RH	1	A-C
- 2	25-58196- 5	• CLAMP	1	A-C
		ATTACHING PARTS		
- 3	AN3-5A	• BOLT	1	
	AN960D10	• WASHER	1	
		¤----¤-¤-¤----¤		
- 4	AN742-32	• CLAMP	1	
		ATTACHING PARTS		
	AN3-4A	• BOLT	1	
	AN960D10	• WASHER	2	
		¤----¤-¤-¤----¤		
- 5	C09A016	• CONNECTOR ASSY (FLRE)	1	
- 6	C09A304	• SEAL (FLRE)	1	
- 7	25-58251- 1	• TUBE ASSEMBLY, EMERGENCY DUMP LINE LH	1	A-C
	25-58251- 2	• TUBE ASSEMBLY, EMERGENCY DUMP LINE RH	1	A-C
- 8	AN735D32	• CLAMP	1	A-C
		ATTACHING PARTS		
	AN3-4A	• BOLT	1	
	AN960D10L	• WASHER	1	
	AN365-1032	• NUT	1	
		¤----¤-¤-¤----¤		
- 9	AN742D26CB	• CLAMP	1	
		ATTACHING PARTS		
	AN3-4A	• BOLT	1	
	AN960D10,	• WASHER	1	
	AN365-1032	• NUT	1	
		¤----¤-¤-¤----¤		
- 10	25-58199- 31	• TUBE ASSEMBLY, WING FUEL SYSTEM, LEFT SIDE	1	A-C
	25-58199- 33	• TUBE ASSEMBLY, WING FUEL SYSTEM, RIGHT SIDE	1	A-C
- 11	AN837-12D	• ELBOW	1	
	AN960D1716L	• WASHER, USE WITH INDEX 11	1	
- 12	AN924-12D	• NUT	1	
- 13	25-58199- 27	• TUBE ASSEMBLY, WING FUEL SYSTEM, LEFT SIDE	1	A-C
	25-58199- 29	• TUBE ASSEMBLY, WING FUEL SYSTEM, RIGHT SIDE	1	A-C
- 14	AN833-12D	• ELBOW	1	
	AN960D1716L	• WASHER, USE WITH INDEX 14	1	
	AN924-12D	• NUT, USE WITH INDEX 14	1	
- 15	25-58199- 23	• TUBE ASSEMBLY, WING FUEL SYSTEM, LEFT SIDE	1	A-C
	25-58199- 25	• TUBE ASSEMBLY, WING FUEL SYSTEM, RIGHT SIDE	1	A-C
- 16	AN760D12	• CONNECTOR	2	
		ATTACHING PARTS		
- 17	AN3H4A	• BOLT	8	
	AN960D10L	• WASHER	8	
		¤----¤-¤-¤----¤		
- 18	AN763-12	• GASKET	2	
- 19	AN742D27C	• CLAMP	2	
		ATTACHING PARTS		
	NAS229-11	• SCREW	2	
	AN960D10	• WASHER	2	
	AN365-1032	• NUT	2	
		¤----¤-¤-¤----¤		
- 20	1360-526555	• VALVE, SOLENOID (PA)	1	
- 21	25-58199- 21	• TUBE ASSEMBLY, WING FUEL SYSTEM	1	
- 22	AN815-12D	• UNION	1	
- 23	MS29512-12	• GASKET	1	
- 24	103500-3	• VALVE, WING TANK PRESSURE REGULATOR (AEDS) MCDONNELL SPEC 25-58087-3	1	
		ATTACHING PARTS		
- 25	AN4-32A	• BOLT	2	
	AN960D416L	• WASHER	2	
- 26	AN3H4A	• BOLT	4	
	AN960D10L	• WASHER	4	
		¤----¤-¤-¤----¤		
- 27	AN763-16	• GASKET	1	

FIGURE & INDEX NUMBER	PART NUMBER	1 2 3 4 5 6 7 DESCRIPTION	UNITS PER ASS'Y	USABLE ON CODE
35 -	25-58200-301	• HOSE ASSEMBLY, RAM AIR INLET	1	A-C
- 28	AN756D16	• • FLANGE	1	
- 29	9720-16D	• • NIPPLE (AQ)	1	
- 30	212-16D	• • SOCKET (AQ)	1	
- 31	MS28740-16	• • FITTING, END	1	
- 32	25-58200- 5	• • HOSE	1	
- 33	1-1045-76	• VALVE, CHECK (PA)	1	
- 34	MS29512-16	• GASKET	1	
- 35	25-58182- 3	• INLET ASSEMBLY, WING LEADING EDGE RAM AIR LH	1	A-C
	25-58182- 4	• INLET ASSEMBLY, WING LEADING EDGE RAM AIR RH	1	A-C
		ATTACHING PARTS		
	AN509-10R11	• SCREW	6	
		¤-----¤-¤-¤-----¤		
- 36	25-58206- 3	• • GASKET, WING LEADING EDGE RAM AIR INLET	1	
- 37	25-58199- 51	• TUBE ASSEMBLY, WING FUEL SYSTEM, LEFT SIDE	1	
	25-58199- 53	• TUBE ASSEMBLY, WING FUEL SYSTEM, RIGHT SIDE	1	
- 38	AN815-4D	• UNION	1	
- 39	MS29512-4	• GASKET	1	
- 40	25-58199- 17	• TUBE ASSEMBLY, WING FUEL SYSTEM, LEFT SIDE	1	
	25-58199- 19	• TUBE ASSEMBLY, WING FUEL SYSTEM, RIGHT SIDE	1	
- 41	AN807-16D	• ADAPTER	1	
	MS29512-16	• GASKET, USE WITH INDEX 41	1	
- 42	AN924-16D	• NUT	3	
- 43	C09A008	• CONNECTOR, PIPE ASSEMBLY (FLRE)	3	
	C09A300	• SEAL (FLRE) USE WITH INDEX 43	3	
- 44	AN815-4D	• UNION	1	
- 45	25-58199- 47	• TUBE ASSEMBLY, WING FUEL SYSTEM, LEFT SIDE	1	
	25-58199- 49	• TUBE ASSEMBLY, WING FUEL SYSTEM, RIGHT SIDE	1	
- 46	25-58199- 13	• TUBE ASSEMBLY, WING FUEL SYSTEM, LEFT SIDE	1	
	25-58199- 15	• TUBE ASSEMBLY, WING FUEL SYSTEM, RIGHT SIDE	1	
- 47	25-58199- 43	• TUBE ASSEMBLY, WING FUEL SYSTEM, LEFT SIDE	1	
	25-58199- 45	• TUBE ASSEMBLY, WING FUEL SYSTEM, RIGHT SIDE	1	
- 48	25-58199- 9	• TUBE ASSEMBLY, WING FUEL SYSTEM, LEFT SIDE	1	
	25-58199- 11	• TUBE ASSEMBLY, WING FUEL SYSTEM, RIGHT SIDE	1	
- 49	AN833-16D	• ELBOW	1	
	MS29512-16	• GASKET, USE WITH INDEX 49	1	
	AN924-16D	• NUT, USE WITH INDEX 49	1	
- 50	25-58199- 39	• TUBE ASSEMBLY, WING FUEL SYSTEM, LEFT SIDE	1	
- 51	AN834-4D	• TEE, LEFT SIDE	1	
	AN924-4D	• NUT, USE WITH INDEX 51	1	
	MS29512-4	• GASKET, USE WITH INDEX 51	1	
- 52	15-50106- 1	• VENT ASSEMBLY, FUEL CONTROL & TACH GENERATOR SEAL DRAIN	1	C-F
	AN818-4D	• • NUT	1	C-F
	15-50107- 3	• • WASHER, FUEL CONTROL & TACH GENERATOR VENT	1	C-F
	AN815-4D	• • UNION	1	C-F
	MS29512-4	• GASKET, USE WITH INDEX 52	1	C-F
- 53	69000-1	• SWITCH, 6PSI PRESSURE DIFFERENTIAL (ESSX) MCDONNELL SPEC 25-75013-1	1	
		ATTACHING PARTS		
	AN502-10-6	• SCREW	3	
	AN960D10	• WASHER	3	
		¤-----¤-¤-¤-----¤		
- 54	25-58199- 35	• TUBE ASSEMBLY, WING FUEL SYSTEM, LEFT SIDE	1	
- 55	AN833-4D	• ELBOW, LEFT SIDE	1	
	AN924-4D	• NUT, USE WITH INDEX 55	1	
	MS29512-4	• GASKET, USE WITH INDEX 55	1	
- 56	25-58199- 41	• TUBE ASSEMBLY, WING FUEL SYSTEM, RIGHT SIDE	1	
- 57	AN824-4D	• TEE, RIGHT SIDE	1	
- 58	25-58199- 55	• TUBE ASSEMBLY, WING FUEL SYSTEM, RIGHT SIDE	1	
- 59	AN815-4D	• UNION, RIGHT SIDE	1	
	MS29512-4	• GASKET, USE WITH INDEX 59	1	
- 60	25-58199- 37	• TUBE ASSEMBLY, WING FUEL SYSTEM, RIGHT SIDE	1	
- 61	AN837-4D	• ELBOW, RIGHT SIDE	1	
	AN924-4D	• NUT, USE WITH INDEX 61	1	
	MS29512-4	• GASKET, USE WITH INDEX 61	1	
- 62	25-58118- 1 *	• FLANGE ASSY, WING TANKS VENT INTERCONNECTOR	1	
		ATTACHING PARTS		
- 63	AN4H5A	• BOLT	8	A
	AN960D416	• WASHER	8	A
- 64	AN3-7A	• BOLT	2	
	AN960D10L	• WASHER	4	
	AN365-1032	• NUT	2	
		¤-----¤-¤-¤-----¤		
- 65	25-58151- 1	• INTERCONNECTOR ASSEMBLY, WING TANKS VENT LH	1	
	25-58151- 2	• INTERCONNECTOR ASSEMBLY, WING TANKS VENT RH	1	

* CONSISTS OF MATCHED PAIRS & MUST BE REPLACED AS A SET.

FIGURE & INDEX NUMBER	PART NUMBER	1 2 3 4 5 6 7 DESCRIPTION	UNITS PER ASS'Y	USABLE ON CODE
35 -		ATTACHING PARTS		
- 66	AN4H5A	• BOLT	8	
	AN960D416	• WASHER	8	
- 67	AN3-7A	• BOLT	2	
	AN960D10L	• WASHER	2	
		¤----¤-¤-¤----¤		
- 68	25-58119- 1	• FLANGE ASSY, WING TANK GRAVITY FLOW INTERCONNECTOR	1	
		ATTACHING PARTS		
- 69	AN4H7A	• BOLT	12	
	AN960D416L	• WASHER	12	
- 70	AN3-7A	• BOLT	2	
	AN960D10L	• WASHER	4	
	AN365-1032	• NUT	2	
		¤----¤-¤-¤----¤		
- 71	25-58152- 1	• INTERCONNECTOR ASSY, WING TANK GRAVITY FLOW	1	
		ATTACHING PARTS		
- 72	AN4H5A	• BOLT	12	
	AN960D416L	• WASHER	12	
- 73	AN3-7A	• BOLT	2	
	AN960D10L	• WASHER	2	
		¤----¤-¤-¤----¤		
	25-58015- 1	• BACKING ASSEMBLY, WING FUEL TANK LH	1	
	25-58015- 2	• BACKING ASSEMBLY, WING FUEL TANK RH	1	

Inner Wing

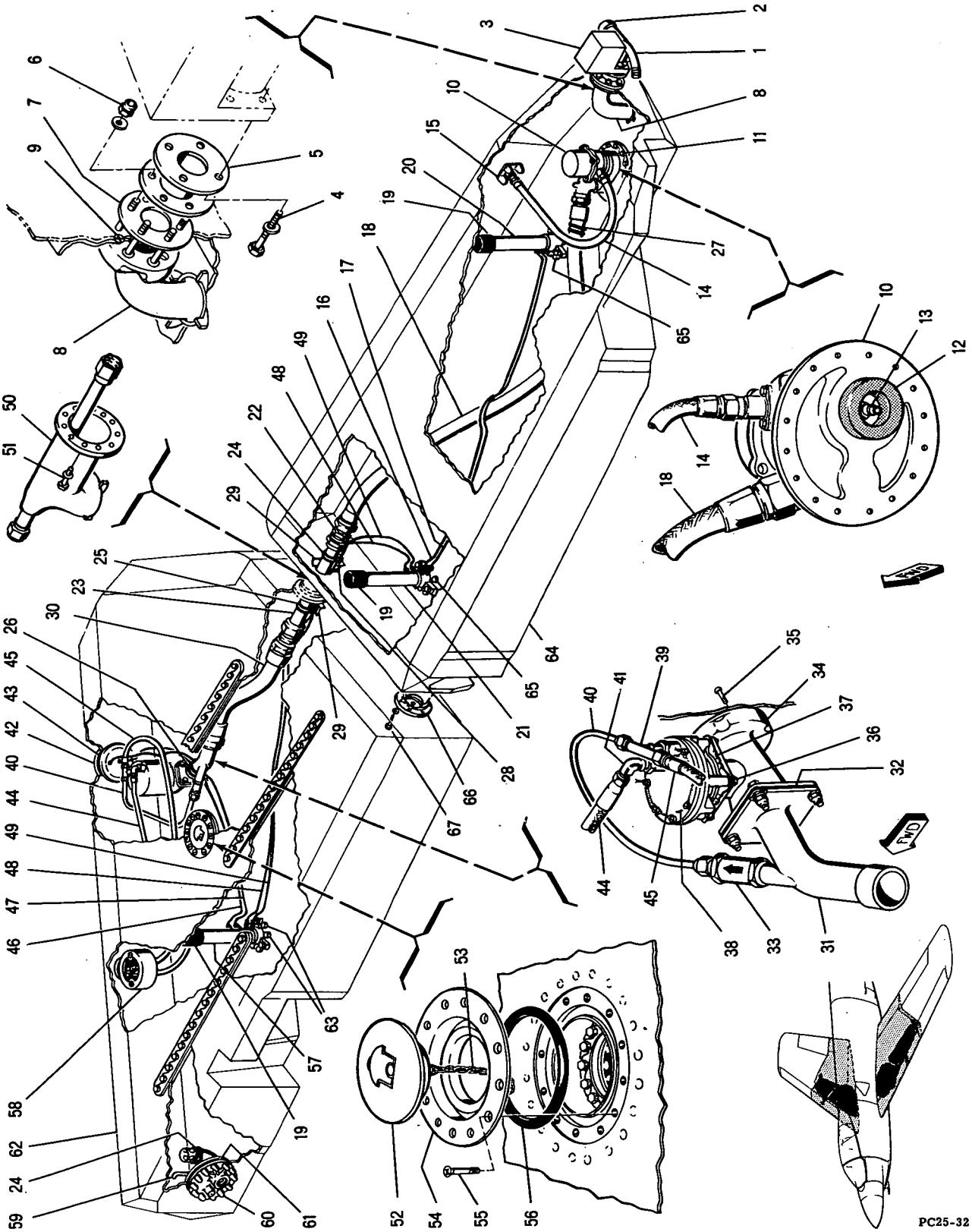

Figure 36 -- Inner Wing Fuel Tanks Installation

FIGURE & INDEX NUMBER	PART NUMBER	1 2 3 4 5 6 7 DESCRIPTION	UNITS PER ASS'Y	USABLE ON CODE
36 -	25-58009- 1	TANKS INSTALLATION, INNER WING FUEL LH, SEE FIG. 14-3 FOR NEXT HIGHER ASSEMBLY	REF	A
	25-58009-301	TANKS INSTALLATION, INNER WING FUEL LH, SEE FIG. 14-3 FOR NEXT HIGHER ASSEMBLY	REF	B-C
	25-58009- 2	TANKS INSTALLATION, INNER WING FUEL RH, SEE FIG. 14-3 FOR NEXT HIGHER ASSEMBLY	REF	A
	25-58009-302	TANKS INSTALLATION, INNER WING FUEL RH, SEE FIG. 14-3 FOR NEXT HIGHER ASSEMBLY	REF	B-C
- 1	25-58143- 3	• TEE, EMER DUMP LINE LH	1	A-C
	25-58143- 4	• TEE, EMER DUMP LINE RH	1	A-C
		ATTACHING PARTS		
	AN4H4A	• BOLT	4	
	AN960D416L	• WASHER	4	
		¤----¤-¤-¤----¤		
- 2	C09A012	• CONNECTOR, PIPE (FLRE)	1	
	C09A302	• SEAL (FLRE) USE WITH INDEX 2	1	
- 3	AV16B1160A	• VALVE, WING FUEL SYSTEM SHUTOFF (GCO) MCDONNELL SPEC 25-58085-1, MAY BE USED IF AV16B1160B (GCO) IS NOT AVAILABLE	1	
	AV16B1160B	• VALVE, WING FUEL SYSTEM SHUTOFF (GCO) MCDONNELL SPEC 25-58085-3, USE FOR FUTURE PROCUREMENT TO REPLACE AV16B1160A (GCO)	1	
		ATTACHING PARTS		
- 4	AN4H4A	• BOLT	4	
	AN960D416L	• WASHER	4	
		¤----¤-¤-¤----¤		
- 5	25-58069- 3	• SPACER, WING FUEL SHUTOFF VALVE	1	A-C
		ATTACHING PARTS		
- 6	AN960D416	• WASHER	6	
	AN365-428	• NUT	6	
		¤----¤-¤-¤----¤		
- 7	25-58076- 47	• GASKET, FUEL SYSTEM	1	
- 8	25-58144- 1	• ELBOW ASSEMBLY, EMERGENCY DUMP LINE OUTLET	1	
		ATTACHING PARTS		
- 9	AN509-10R11	• SCREW	3	
		¤----¤-¤-¤----¤		
	SF101-9SA18A	• • STUD (ROSN)	6	
	RL24S87	• • RING, LOCK (ROSN)	6	
- 10	TF56700-2 *	• PUMP, BOOSTER (TP)	1	
		ATTACHING PARTS		
- 11	AN4H7A	• BOLT	16	
	AN960D416L	• WASHER	16	
		¤----¤-¤-¤----¤		
- 12	25-58100- 3	• SEAL, WING BOOST PUMP DRAIN	1	
- 13	230-20274	• VALVE, DRAIN (WH)	1	
- 14	MS28741-8-0210	• HOSE ASSY, TANK INTERNAL WIRING CONDUIT, LEFT SIDE	1	
	MS28741-8-0300	• HOSE ASSY, TANK INTERNAL WIRING CONDUIT, RIGHT SIDE	1	
- 15	25-58179- 3	• FITTING, ELECTRICAL ACCESS	1	
		ATTACHING PARTS		
	AN4H7A	• BOLT	4	
	AN960D416L	• WASHER	4	
		¤----¤-¤-¤----¤		
- 16	163-055-40	• CABLE ASSEMBLY (AVEN)	1	
- 17	163-056-40	• CABLE ASSEMBLY (AVEN)	1	
- 18	25-58218- 1	• HOSE ASSY, FUEL TRANSFER	1	
	MS28740-20	• • FITTING, END	2	
- 19	25-58108- 3	• COVER, FUEL GAGE PROBE	3	A-B
	165-2344	• GUARD (AVEN)	3	C-F
- 20	165-085-577	• UNIT, WING OUTBOARD TANK (AVEN) MCDONNELL SPEC 25-58084-9	1	
		ATTACHING PARTS		
	AN4H10A	• BOLT	3	
	AN960D416	• WASHER	3	
		¤----¤-¤-¤----¤		
- 21	165-079-578	• UNIT, WING CENTER TANK (AVEN) MCDONNELL SPEC 25-58084-11	1	
		ATTACHING PARTS		
	AN4H10A	• BOLT	3	
	AN960D416	• WASHER	3	
		¤----¤-¤-¤----¤		

* MUST BE MODIFIED BY THOMPSON PRODUCTS INC., SERVICE BULLETIN ESD136 PRIOR TO INSTALLATION ON ANY AIRCRAFT.

FIGURE & INDEX NUMBER	PART NUMBER	1 2 3 4 5 6 7 DESCRIPTION	UNITS PER ASS'Y	USABLE ON CODE
36 - 22	AN815-20D	• UNION	2	A-C
- 23	25-58199- 3	• TUBE ASSEMBLY, WING FUEL SYSTEM	1	A
- 24	755-20-2-8AF	• CLIP (AP)	2	
- 25	755-20-2-8AF	• CLIP (AP)	1	A
- 26	754-24-2-8AF	• CLIP (AP)	1	
	754-24-2-8AF	• CLIP (AP)	1	B-F
- 27	754-12-2-8AF	• CLIP (AP)	1	B-F
- 28	25-58195- 3	• CLIP, WING FUEL LINE SUPPORT LH	1	A
- 29	25-58195- 4	• CLIP, WING FUEL LINE SUPPORT RH	1	A
	25-58090- 3	• CLIP, WING FUEL LINE & GAGING WIRE SUPPORT	2	B-C
- 30	25-58218- 5	• HOSE ASSY, FUEL TRANSFER	1	
	MS28740-20	• • FITTING, END	2	
- 31	1111-526821	• VALVE (PA) LEFT SIDE	1	
	1111-526823	• VALVE (PA) RIGHT SIDE	1	
		ATTACHING PARTS		
	AN5-7A	• BOLT	4	
	AN960D516L	• WASHER	4	
	AN960D516	• WASHER	8	
	AN363-524	• NUT	4	
		¤----¤-¤-¤----¤		
- 32	25-58076- 21	• GASKET, FUEL SYSTEM	1	
- 33	10-1344-75	• VALVE (PA)	1	
	MS29512-4	• GASKET, USE WITH INDEX 33	1	
- 34	25-58135- 3	• TEE, SHUTOFF VALVE	1	
		ATTACHING PARTS		
- 35	AN509-10R11	• SCREW	4	
- 36	AN4H4A	• BOLT	4	
	AN960D416L	• WASHER	4	
		¤----¤-¤-¤----¤		
- 37	12-548-33	• GASKET (PA) MCDONNELL SPEC 25-58088-25	1	
- 38	1321-517478	• VALVE, DUAL DIAPHRAGM SHUTOFF (PA) MCDONNELL SPEC 25-58088-9	1	
- 39	AN834-4D	• TEE	1	
	AN924-4D	• NUT, USE WITH INDEX 39	1	
	MS29512-4	• GASKET, USE WITH INDEX 39	1	
- 40	25-58199- 5	• TUBE ASSEMBLY, WING FUEL SYSTEM, LEFT SIDE	1	
	25-58199- 7	• TUBE ASSEMBLY, WING FUEL SYSTEM, RIGHT SIDE	1	
- 41	AN833-4D	• ELBOW	1	
	AN924-4D	• NUT, USE WITH INDEX 41	1	
	MS29512-4	• GASKET, USE WITH INDEX 41	1	
- 42	163-095	• CONNECTOR, TANK FITTING (AVEN) MCDONNELL SPEC 25-58084-17	1	
		ATTACHING PARTS		
	AN4H6A	• BOLT	10	
	AN960D416L	• WASHER	10	
		¤----¤-¤-¤----¤		
- 43	25-58076- 51	• GASKET, FUEL SYSTEM	1	
- 44	MS28741-4-0220	• HOSE ASSY, WING FUEL SYSTEM	1	
- 45	MS28741-4-0350	• HOSE ASSY, WING FUEL SYSTEM	1	
- 46	163-055-33	• CABLE ASSEMBLY (AVEN)	1	
- 47	163-056-33	• CABLE ASSEMBLY (AVEN)	1	
- 48	163-055-53	• CABLE ASSEMBLY (AVEN)	1	A
- 49	163-056-53	• CABLE ASSEMBLY (AVEN)	1	A
	163-0165	• CABLE ASSEMBLY (AVEN)	1	B-F
- 50	25-58095- 1	• OUTLET ASSEMBLY, INBOARD WING FUEL TANK	1	B
	25-58284- 3 *	• OUTLET, INBOARD WING FUEL TANK	1	B-F
		ATTACHING PARTS		
- 51	AN4H7A	• BOLT	12	
	AN960D416L	• WASHER	12	
		¤----¤-¤-¤----¤		
	25-58199- 69 *	• TUBE ASSY, WING FUEL SYSTEM	1	B-F
	AN919-26D *	• UNION	1	B-F
	AN931A16S30 *	• GROMMET	1	B-F
	25-58090- 5	• CLIP, WING FUEL LINE & GAGING WIRE SUPPORT	2	B-F
- 52	416-2	• CAP ASSY, ROSS & AMANN, SEAFORD, LONG ISLAND, NEW YORK	1	
- 53	416-12-5	• CHAIN ASSY, ROSS & AMANN, SEAFORD, LONG ISLAND NEW YORK	1	
- 54	416-3M	• ADAPTER ASSY, ROSS & AMANN, SEAFORD, LONG ISLAND, NEW YORK	1	
		ATTACHING PARTS		
- 55	AN509-416R24	• SCREW	12	
		¤----¤-¤-¤----¤		
- 56	MS29513-427	• PACKING, O RING	1	

* THESE PARTS, USED AS A SET, REPLACE 25-58095-1 FOR FUTURE PROCUREMENT.

FIGURE & INDEX NUMBER	PART NUMBER	1 2 3 4 5 6 7 DESCRIPTION	UNITS PER ASS'Y	USABLE ON CODE
36 - 57	165-079-579	• UNIT, WING INBOARD TANK (AVEN) MCDONNELL SPEC 25-58084-13	1	
		ATTACHING PARTS		
	AN4H10A	• BOLT	3	
	AN960D416	• WASHER	3	
		¤----¤-¤-¤----¤		
- 58	1323-518230	• VALVE, SIDE MOUNTED SOLENOID PILOT (PA) MCDONNELL SPEC 25-58088-13	1	
		ATTACHING PARTS		
	AN4H7A	• BOLT	8	
	AN960D416	• WASHER	8	
		¤----¤-¤-¤----¤		
	AN815-4D	• UNION, USE WITH INDEX 58	2	
	MS29512-4	• GASKET, USE WITH INDEX 58	2	
- 59	25-58199- 57	• TUBE ASSEMBLY, WING FUEL SYSTEM, LEFT SIDE	1	
	25-58199- 59	• TUBE ASSEMBLY, WING FUEL SYSTEM, RIGHT SIDE	1	
	AN815-4D	• UNION, USE WITH INDEX 59	1	
	MS29512-4	• GASKET, USE WITH INDEX 59	1	
- 60	25-58161- 1	• INLET ASSEMBLY, RAM AIR WING TANK LH	1	
	25-58161- 2	• INLET ASSEMBLY, RAM AIR WING TANK RH	1	
		ATTACHING PARTS		
	AN4H11A	• BOLT	12	
	AN960D416L	• WASHER	12	
		¤----¤-¤-¤----¤		
- 61	25-58076- 49	• GASKET, FUEL SYSTEM	1	
- 62	2F1-6-18069-1	• TANK, NON SELF SEALING WING INBD FUEL LH (GY) MCDONNELL SPEC 25-58004-1, FOR FUTURE PROCUREMENT USE FCE29805 (USR) OR 2F1-6-18069-3 (GY)	1	A1-A6
	FCE29805	• TANK, NON SELF SEALING WING INBD FUEL LH (USR) ALTERNATE 2F1-6-18069-3 (GY) MCDONNELL SPEC 25-58004-3, USE FOR FUTURE PROCUREMENT TO REPLACE 2F1-6-18069-1 (GY)	1	
	2F1-6-18069-2	• TANK, NON SELF SEALING WING INBD FUEL RH (GY) MCDONNELL SPEC 25-58004-2, FOR FUTURE PROCUREMENT USE FCE29806 (USR) OR 2F1-6-18069-4 (GY)	1	A1-A6
	FCE29806	• TANK, NON SELF SEALING WING INBD FUEL RH (USR) ALTERNATE 2F1-6-18069-4 (GY) MCDONNELL SPEC 25-58004-4, USE FOR FUTURE PROCUREMENT TO REPLACE 2F1-6-18069-2 (GY)	1	
		ATTACHING PARTS		
- 63	AN4H6A	• BOLT	7	
	AN960D416	• WASHER	7	
		¤----¤-¤-¤----¤		
- 64	2F1-6-18070-1	• TANK, NON SELF SEALING WING OUTBD FUEL LH (GY) MCDONNELL SPEC 25-58005-1, FOR FUTURE PROCUREMENT USE FCE29801 (USR) OR 2F1-6-18070-3 (GY)	1	A1-A6
	FCE29801	• TANK, NON SELF SEALING WING OUTBD FUEL LH (USR) ALTERNATE 2F1-6-18070-3 (GY) MCDONNELL SPEC 25-58005-3, USE FOR FUTURE PROCUREMENT TO REPLACE 2F1-6-18070-1 (GY)	1	
	2F1-6-18070-2	• TANK, NON SELF SEALING WING OUTBD FUEL RH (GY) MCDONNELL SPEC 25-58005-2, FOR FUTURE PROCUREMENT USE FCE29802 (USR) OR 2F1-6-18070-4 (GY)	1	A1-A6
	FCE29802	TANK, NON SELF SEALING WING OUTBD FUEL RH, (USR) ALTERNATE 2F1-6-18070-4 (GY) MCDONNELL SPEC 25-58005-4, USE FOR FUTURE PROCUREMENT TO REPLACE 2F1-6-18070-2 (GY)	1	
		ATTACHING PARTS		
- 65	AN4H6A	• BOLT	14	
	AN960D416	• WASHER	14	
		¤----¤-¤-¤----¤		
	25-58015- 27	• BACKING ASSY, WING FUEL TANK LH	1	
	25-58015- 28	• BACKING ASSY, WING FUEL TANK RH	1	
- 66	1111-548112	• VALVE ASSEMBLY (PA)	1	B-F
		ATTACHING PARTS		
- 67	AN4H7A	• BOLT	8	
	AN960D416	• WASHER	8	
		¤----¤-¤-¤----¤		

Tail Group

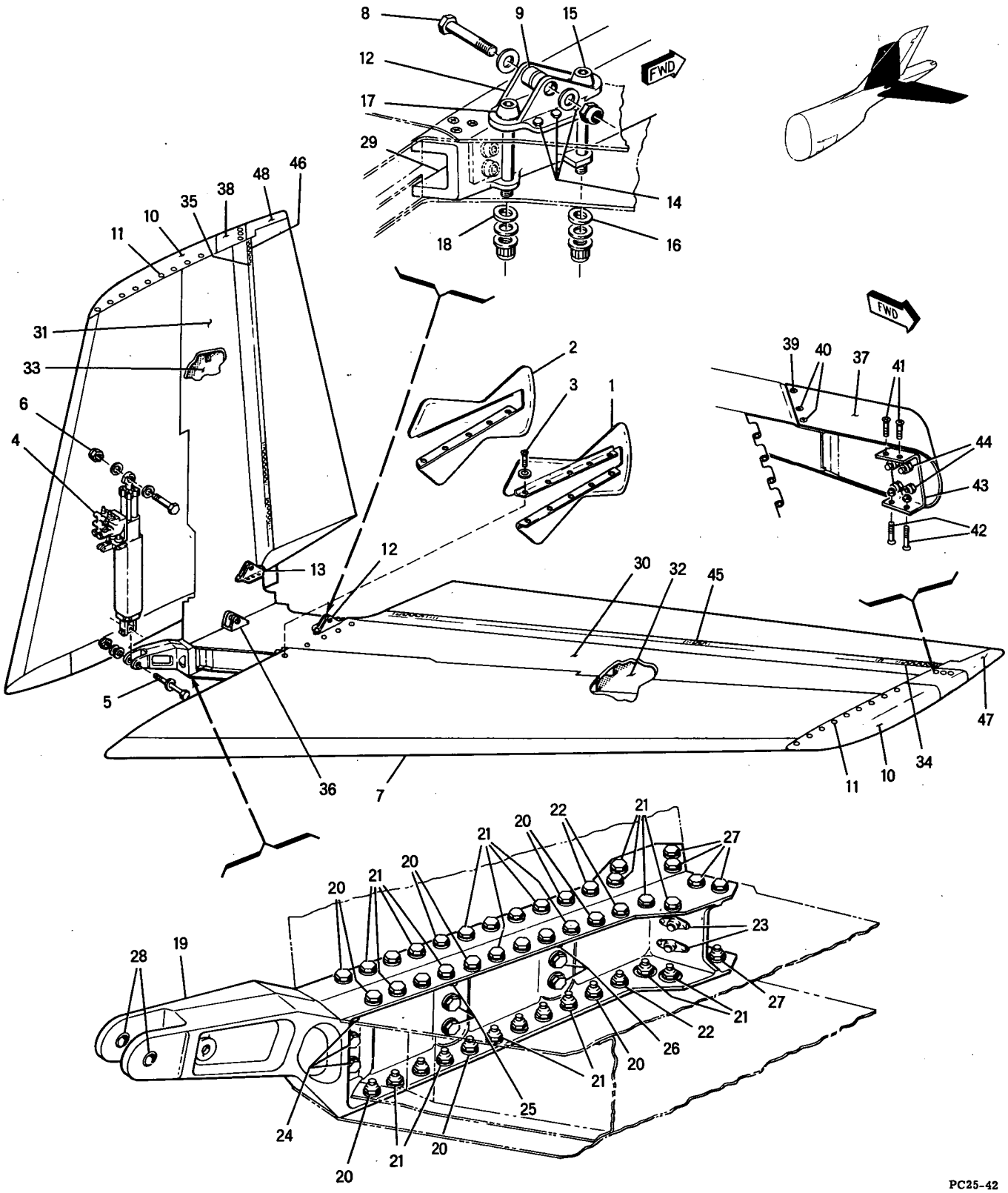

Figure 37 -- Horizontal Stabilator Installation

FIGURE & INDEX NUMBER	PART NUMBER	1 2 3 4 5 6 7 DESCRIPTION	UNITS PER ASS'Y	USABLE ON CODE
37 -	25-21000-301	STABILATOR INSTL, HORIZONTAL, SEE FIG. 1-7 FOR NEXT HIGHER ASSY	1	A-B
- 1	25-21038-301	• COVER ASSEMBLY, HORIZONTAL STABILATOR LH	1	
- 2	25-21038-302	• COVER ASSEMBLY, HORIZONTAL STABILATOR RH	1	
		ATTACHING PARTS		
- 3	AN509-10R20	• SCREW	20	
	19-21039- 3	• WASHER, STABILATOR COVER SMALL	20	
		¤----¤-¤-¤----¤		
- 4	12020-1	• CYLINDER, STABILATOR DUAL POWER CONTROL (WAH) MCDONNELL SPEC 25-69101-1	1	A-C
		ATTACHING PARTS		
- 5	AN178-30A	• BOLT	1	
	AN960D816L	• WASHER	1	
	AN960D816	• WASHER	2	
	AN365-820	• NUT	1	
- 6	AN178-17A	• BOLT	1	
	AN960D816L	• WASHER	1	
	AN960D816	• WASHER	1	
	AN365-820	• NUT	1	
		¤----¤-¤-¤----¤		
- 7	25-21002-301	• STABILATOR ASSEMBLY, HORIZONTAL STRUCTURAL	1	A-B
		ATTACHING PARTS		
- 8	NAS464-10A23	• BOLT	2	
	AN960D1016	• WASHER	2	
	AN960D1016L	• WASHER	2	
	AN364-1018	• NUT	2	
- 9	NAS72-10-014	• BUSHING	2	
		¤----¤-¤-¤----¤		
- 10	25-21026- 1	• • TIP ASSEMBLY, HORIZONTAL STABILATOR	2	A-B
		ATTACHING PARTS		
- 11	AN509-10R8	• • SCREW	36	
		¤----¤-¤-¤----¤		
- 12	25-21003- 3	• • FITTING, HOR STABILATOR FUS ATTACHMENT LH	1	
- 13	25-21003- 4	• • FITTING, HOR STABILATOR FUS ATTACHMENT RH	1	
		ATTACHING PARTS		
- 14	AN3-6A	• • BOLT	6	
	AN960D10L	• • WASHER	12	
- 15	NAS148-91	• • BOLT	2	
	NAS143-8C	• • WASHER	2	
- 16	25-21002- 19	• • WASHER	2	
	EB080	• • NUT (EN)	2	
- 17	NAS149-86	• • BOLT	2	
	NAS143-9C	• • WASHER	2	
- 18	25-21002- 21	• • WASHER	2	
	EB098	• • NUT (EN)	2	
		¤----¤-¤-¤----¤		
- 19	25-21004- 1	• • RIB ASSEMBLY, HOR STABILATOR CENTER LINE	1	
		ATTACHING PARTS		
- 20	NAS464-6A12	• • BOLT	12	
	AN960D616L	• • WASHER	24	
	AN960D616	• • WASHER	12	
	AN364-624	• • NUT	12	
- 21	NAS464-6A10	• • BOLT	36	
	AN960D616L	• • WASHER	36	
	AN960D616	• • WASHER	36	
	AN364-624	• • NUT	36	
- 22	NAS464-7A10	• • BOLT	4	
	AN960D716L	• • WASHER	4	
	AN960D716	• • WASHER	4	
	AN364-720	• • NUT	4	
- 23	AN6-10A	• • BOLT	4	
	AN960D616	• • WASHER	4	
- 24	NAS464-5A9	• • BOLT	3	
	AN960D516L	• • WASHER	3	
	AN960D516	• • WASHER	3	
	AN364-524	• • NUT	3	
- 25	AN3-10A	• • BOLT	3	
	AN960D10L	• • WASHER	3	
	AN960D10	• • WASHER	6	
	AN364-1032	• • NUT	3	
- 26	AN3-7A	• • BOLT	3	
	AN960D10L	• • WASHER	3	
	AN960D10	• • WASHER	3	
	AN365-1032	• • NUT	3	

FIGURE & INDEX NUMBER	PART NUMBER	1 2 3 4 5 6 7 DESCRIPTION	UNITS PER ASS'Y	USABLE ON CODE
37 -		ATTACHING PARTS (CONT)		
- 27	NAS464-6A15	• • BOLT	8	
	AN960D616L	• • WASHER	16	
	AN960D616	• • WASHER	8	
	AN364-624	• • NUT	8	
		¤----¤-¤-¤----¤		
- 28	4M33-8-012	• • • BUSHING (MDA)	2	
- 29	25-21008-301	• • FITTING ASSEMBLY, HORIZONAL STABILATOR LH	1	A-B
	25-21008-302	• • FITTING ASSEMBLY, HORIZONAL STABILATOR RH	1	A-B
- 30	25-21045- 5	• • SKIN, HORIZONAL STABILATOR UPPER TAPERED LH	1	A-B
- 31	25-21045- 6	• • SKIN, HORIZONAL STABILATOR UPPER TAPERED RH	1	A-B
- 32	25-21046- 5	• • SKIN, HORIZONAL STABILATOR LOWER TAPERED LH	1	A-B
- 33	25-21046- 6	• • SKIN, HORIZONAL STABILATOR LOWER TAPERED RH	1	A-B
	25-21025-301	• • CLOSURE ASSEMBLY, HORIZONAL STABILATOR LH	1	A-B
	25-21025-302	• • CLOSURE ASSEMBLY, HORIZONAL STABILATOR RH	1	A-B
- 34	25-21048- 5	• • • HINGE, HALF LH, ALTERED FROM 9M57H2A9900 (MDA)	1	A-B
- 35	25-21048- 6	• • • HINGE, HALF RH, ALTERED FROM 9M57H2A9900 (MDA)	1	A-B
- 36	25-21072- 3	• • FITTING, DAMPER TO STABILATOR ATTACHMENT	1	
		ATTACHING PARTS		
	NAS146-27	• • BOLT	6	
	25-21002- 51	• • WASHER	6	
	NAS143-6	• • WASHER	12	
	EB064	• • NUT (EN)	6	
		¤----¤-¤-¤----¤		
	25-22002-301	• • ELEVATOR ASSEMBLY, STRUCTURAL LH	1	A-B
	25-22002-302	• • ELEVATOR ASSEMBLY, STRUCTURAL RH	1	A-B
- 37	25-22006-301	• • • WEIGHT ASSEMBLY, ELEV OUTBD BALANCE LH	1	A-B
- 38	25-22006-302	• • • WEIGHT ASSEMBLY, ELEV OUTBD BALANCE RH	1	A-B
		ATTACHING PARTS		
- 39	AN509-10R9	• • • SCREW	2	
- 40	AN509-10R10	• • • SCREW	4	
- 41	AN509-10R10	• • • SCREW	2	
	AN365-1032	• • • NUT	2	
- 42	AN509-10R11	• • • SCREW	2	
	AN365-1032	• • • NUT	2	
		¤----¤-¤-¤----¤		
- 43	25-22006- 21	• • • • CHANNEL LH	1	A-B
	25-22006- 22	• • • • CHANNEL RH	1	A-B
		ATTACHING PARTS		
- 44	AN3-5A	• • • • BOLT	4	
	AN365-1032	• • • • NUT	4	
		¤----¤-¤-¤----¤		
	25-22002- 39	• • • SURFACE ASSEMBLY, ELEVATOR LH	1	A-B
	25-22002- 40	• • • SURFACE ASSEMBLY, ELEVATOR RH	1	A-B
- 45	25-22010- 3	• • • • HINGE, HALF LH, ALTERED FROM 9M57H1A10175 (MDA)	1	A-B
- 46	25-22010- 4	• • • • HINGE, HALF RH, ALTERED FROM 9M57H1A10175 (MDA)	1	A-B
- 47	25-22005- 1	• • • • TIP ASSEMBLY, ELEVATOR LH	1	A-B
- 48	25-22005- 2	• • • • TIP ASSEMBLY, ELEVATOR RH	1	A-B

FIGURE & INDEX NUMBER	PART NUMBER	1 2 3 4 5 6 7 DESCRIPTION	UNITS PER ASS'Y	USABLE ON CODE
38 -	25-21000-303	STABILATOR INSTL, HORIZONTAL, SEE FIG. 1-7 FOR NEXT HIGHER ASSY	1	C-F
- 1	25-21038-301	• COVER ASSEMBLY, HORIZONTAL STABILATOR LH	1	
- 2	25-21038-302	• COVER ASSEMBLY, HORIZONTAL STABILATOR RH	1	
		ATTACHING PARTS		
- 3	AN509-10R20	• SCREW	20	
	19-21039- 3	• WASHER, STABILATOR COVER SMALL	20	
		¤----¤-¤-¤----¤		
- 4	12020-1	• CYLINDER, STABILATOR DUAL POWER CONTROL (WAH) MCDONNELL SPEC 25-69101-1	1	
		ATTACHING PARTS		
- 5	AN178-30A	• BOLT	1	
	AN960D816L	• WASHER	1	
	AN960D816	• WASHER	2	
	AN365-820	• NUT	1	
- 6	AN178-17A	• BOLT	1	
	AN960D816L	• WASHER	1	
	AN960D816	• WASHER	1	
	AN365-820	• NUT	1	
		¤----¤-¤-¤----¤		
- 7	25-21050- 1	• STABILATOR ASSEMBLY, HORIZONTAL STRUCTURAL	1	C-F
		ATTACHING PARTS		
- 8	NAS464-10A23	• BOLT	2	
	AN960D1016	• WASHER	2	
	AN960D1016L	• WASHER	2	
	AN364-1018	• NUT	2	
- 9	NAS72-10-014	• BUSHING	2	
		¤----¤-¤-¤----¤		
- 10	25-21055- 1	• • TIP ASSEMBLY, HORIZONTAL STABILATOR	2	C-F
		ATTACHING PARTS		
- 11	AN509-10R8	• • SCREW	56	
		¤----¤-¤-¤----¤		
- 12	25-21003- 3	• • FITTING, HOR STABILATOR FUS ATTACHMENT LH	1	
- 13	25-21003- 4	• • FITTING, HOR STABILATOR FUS ATTACHMENT RH	1	
		ATTACHING PARTS		
- 14	AN3-6A	• • BOLT	6	
	AN960D10L	• • WASHER	2	
- 15	NAS148-91	• • BOLT	2	
	NAS143-8C	• • WASHER	2	
- 16	25-21002- 19	• • WASHER	2	
	EB080	• • NUT (EN)	2	
- 17	NAS149-86	• • BOLT	2	
	NAS143-9C	• • WASHER	2	
- 18	25-21002- 21	• • WASHER	2	
	EB098	• • NUT (EN)	2	
		¤----¤-¤-¤----¤		
- 19	25-21004- 1	• • RIB ASSEMBLY, HOR STABILATOR CENTER LINE	1	
		ATTACHING PARTS		
- 20	NAS464-6A12	• • BOLT	12	
	AN960D616L	• • WASHER	24	
	AN960D616	• • WASHER	12	
	AN364-624	• • NUT	12	
- 21	NAS464-6A10	• • BOLT	36	
	AN960D616L	• • WASHER	36	
	AN960D616	• • WASHER	36	
	AN364-624	• • NUT	36	
- 22	NAS464-7A10	• • BOLT	4	
	AN960D716L	• • WASHER	4	
	AN960D716	• • WASHER	4	
	AN364-720	• • NUT	4	
- 23	AN6-10A	• • BOLT	4	
	AN960D616	• • WASHER	4	
- 24	NAS464-5A9	• • BOLT	3	
	AN960D516L	• • WASHER	3	
	AN960D516	• • WASHER	3	
	AN364-524	• • NUT	3	
- 25	AN3-10A	• • BOLT	3	
	AN960D10L	• • WASHER	3	
	AN960D10	• • WASHER	6	
	AN364-1032	• • NUT	3	
- 26	AN3-7A	• • BOLT	3	
	AN960D10L	• • WASHER	3	
	AN960D10	• • WASHER	3	
	AN365-1032	• • NUT	3	

Tail Group

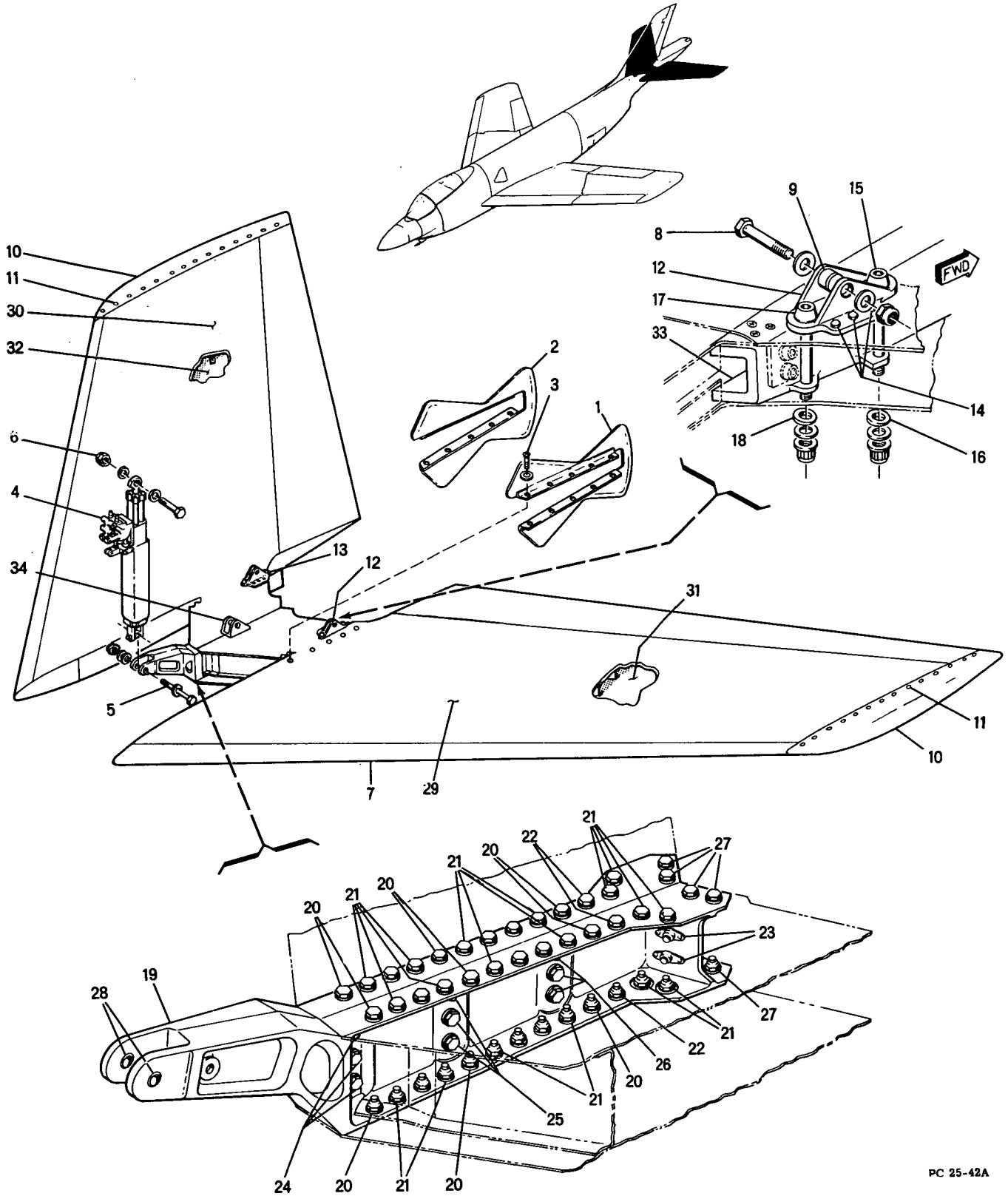

Figure 38 -- Horizontal Stabilator Installation

FIGURE & INDEX NUMBER	PART NUMBER	1 2 3 4 5 6 7 DESCRIPTION	UNITS PER ASS'Y	USABLE ON CODE
38 -		ATTACHING PARTS (CONT)		
- 27	NAS464-6A15	• • BOLT	8	
	AN960D616L	• • WASHER	16	
	AN960D616	• • WASHER	8	
	AN364-624	• • NUT	8	
		¤----¤-¤-¤----¤		
- 28	4M33-8-012	• • • BUSHING (MDA)	2	
- 29	25-21052- 3	• • SKIN, STABILATOR UPPER TAPERED LH	1	C-F
- 30	25-21052- 4	• • SKIN, STABILATOR UPPER TAPERED RH	1	C-F
- 31	25-21052- 5	• • SKIN, STABILATOR LOWER TAPERED LH	1	C-F
- 32	25-21052- 6	• • SKIN, STABILATOR LOWER TAPERED RH	1	C-F
- 33	25-21054- 1	• • FITTING ASSEMBLY, HORIZONTAL STABILATOR LH	1	C-F
	25-21054- 2	• • FITTING ASSEMBLY, HORIZONTAL STABILATOR RH	1	C-F
- 34	25-21072- 3	• • FITTING, DAMPER TO STABILATOR ATTACHMENT	1	
		ATTACHING PARTS		
	NAS146-27	• • BOLT	6	
	25-21002- 51	• • WASHER	6	
	NAS143-6	• • WASHER	12	
	EB064	• • NUT (EN)	6	
		¤----¤-¤-¤----¤		

Tail Group

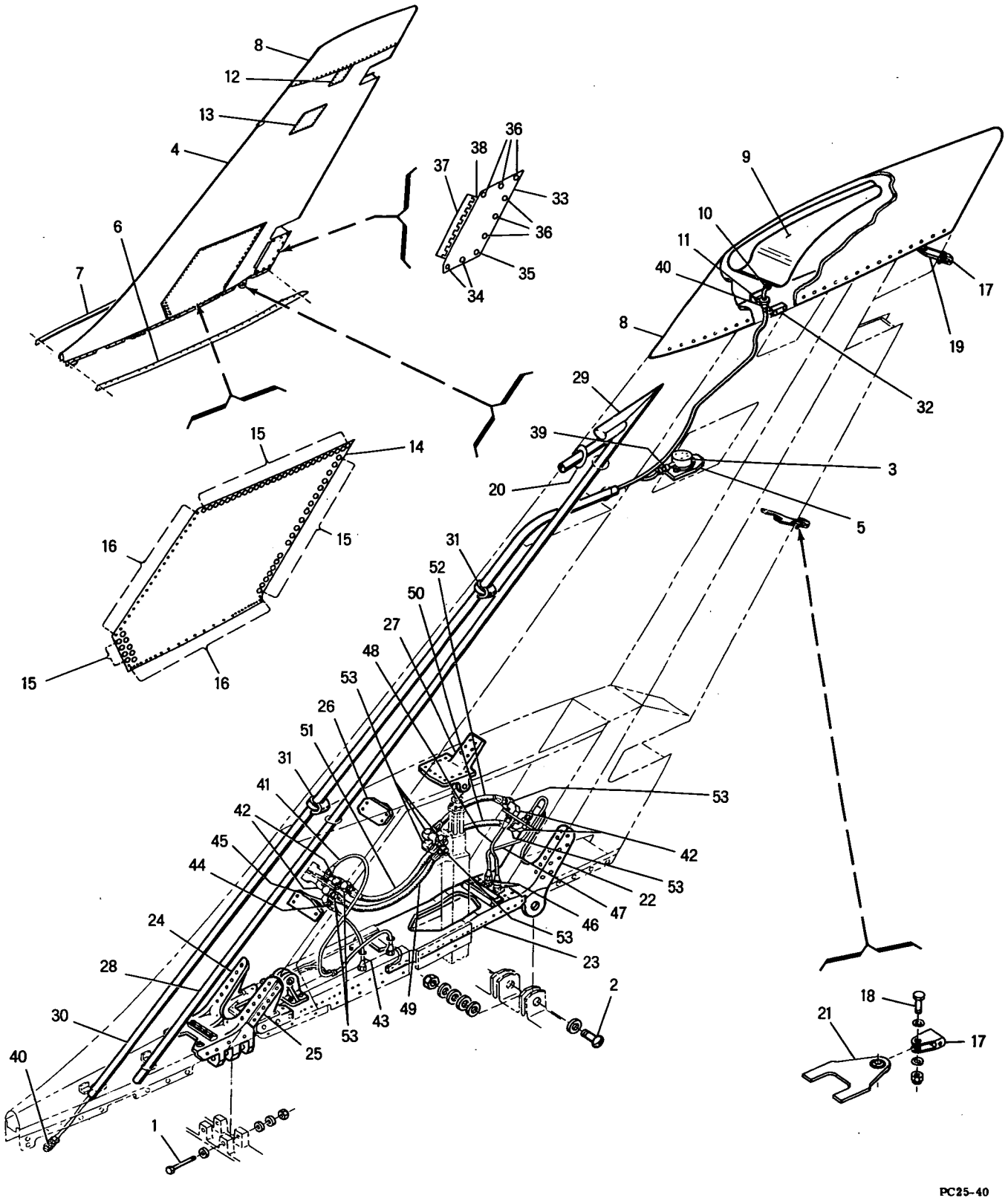

Figure 39 -- Fin Installation

FIGURE & INDEX NUMBER	PART NUMBER	1 2 3 4 5 6 7 DESCRIPTION	UNITS PER ASS'Y	USABLE ON CODE
.39 -	25-23000-303	FIN INSTL, SEE FIG. 1-5 FOR NEXT HIGHER ASSEMBLY	1	
	25-23001-303	• FIN ASSEMBLY	1	
		ATTACHING PARTS		
- 1	25-23042- 3	• BOLT, FRONT SPAR FIN FITTING ATTACHING	2	
	NAS143-10C	• WASHER	2	
	AN960D1016	• WASHER	4	
	AN364-918	• NUT	2	
- 2	25-23033- 5	• BOLT, REAR SPAR FIN FITTING ATTACHING	2	
	NAS143-14C	• WASHER	2	
	AN960-1416	• WASHER	4	
	AN960D1416L	• WASHER	2	
	AN364-1414	• NUT	2	
- 3	R88T1950-050	• • TRANSMITTER, G2 COMPASS, NAF1268-1, AN 05-15-58, GFP	1	
		ATTACHING PARTS		
	NAS203-832BC12	• • SCREW	3	
- 4	25-23001- 7	• • FIN ASSEMBLY	1	
- 5	25-60104- 1	• • • PLATE ASSY, G2 COMPASS TRANSMITTER MOUNTING	1	
		ATTACHING PARTS		
	NAS229BZ21	• • • SCREW, FWD	2	
	NAS229BZ23	• • • SCREW, AFT	2	
	AN960D10	• • • WASHER	4	
- 6	25-23017- 1	• • • FAIRING ASSEMBLY, FIN TO FUSELAGE LH	1	
- 7	25-23017- 2	• • • FAIRING ASSEMBLY, FIN TO FUSELAGE RH	1	
		ATTACHING PARTS		
	AN509-10R8	• • • SCREW	51	
	25-23017- 11	• • • • SEAL, FWD, SELECTED FROM 11M601 (MDA)	1	
	25-23017- 13	• • • • SEAL, AFT, SELECTED FROM 11M601 (MDA)	1	
	25-23002-303	• • • FIN ASSEMBLY, STRUCTURAL	1	
- 8	25-87007- 1	• • • • ANTENNA ASSEMBLY, FIN UHF	1	
		ATTACHING PARTS		
	AN509-10R10	• • • • SCREW	50	
- 9	19-87013- 3	• • • • • RADIATOR, BROAD BAND ANTENNA	1	
- 10	19-87014- 3	• • • • • STUD, ANTENNA	1	
		ATTACHING PARTS		
	AN960A8	• • • • • WASHER	1	
	AN365B832	• • • • • NUT	1	
- 11	UG58/U	• • • • • RECEPTACLE	1	
		ATTACHING PARTS		
	AN515-4R7	• • • • • SCREW	4	
	AN961-4	• • • • • WASHER	4	
	AN960A8	• • • • • WASHER	4	
	AN365-440	• • • • • NUT	4	
	NAF1088-1A4	• • • • CHAIN, DOOR SAFETY	2	
- 12	25-23002- 19	• • • • DOOR, ANTENNA DISCONNECT ACCESS LH	1	
	25-23002- 20	• • • • DOOR, ANTENNA DISCONNECT ACCESS RH	1	
		ATTACHING PARTS		
	AN509-10R9	• • • • SCREW	36	
	NAF1088-1A5	• • • • CHAIN, DOOR SAFETY	1	
- 13	25-23002- 21	• • • • DOOR, LEFT SIDE ONLY	1	
		ATTACHING PARTS		
	AN509P10R9	• • • • SCREW	30	
- 14	25-23002- 63	• • • • DOOR ASSY, STABILATOR ACTUATOR ACCESS LH	1	
	25-23002- 64	• • • • DOOR ASSY, STABILATOR ACTUATOR ACCESS RH	1	
		ATTACHING PARTS		
- 15	AN509-416R10	• • • • SCREW	104	
- 16	AN509-10R15	• • • • SCREW	96	

FIGURE & INDEX NUMBER	PART NUMBER	1 2 3 4 5 6 7 DESCRIPTION	UNITS PER ASS'Y	USABLE ON CODE
39 - 17	25-24009- 3	• • • • FITTING, RUDDER HINGE GIMBLE	2	
		ATTACHING PARTS		
- 18	AN4-12A	• • • • BOLT	2	
	AN960D416	• • • • WASHER	4	
	AN365-428	• • • • NUT	2	
		¤----¤-¤-¤----¤		
- 19	25-23013- 1	• • • • FITTING ASSEMBLY, FIN UPPER HINGE	1	
	AN200KS4	• • • • • BEARING	1	
- 20	15-60443- 3	• • • • SEAL, PITOT TUBE & FIN	1	
- 21	25-23012- 1	• • • • FITTING ASSEMBLY, FIN CENTER HINGE	1	
	AN200KS4	• • • • • BEARING	1	
	25-23006- 1	• • • • SPAR ASSEMBLY, FIN REAR	1	
- 22	25-23004- 7	• • • • • FITTING, FIN REAR SPAR ATTACHMENT	1	
	25-23007-303	• • • • RIB ASSEMBLY, FIN CANTED	1	
	25-23007- 79	• • • • • RIB ASSY	1	
- 23	25-23045- 3	• • • • • • • FITTING, CANTED RIB FIN	1	A-B
	25-23051- 3	• • • • • • • FITTING, CANTED RIB FIN	1	C-F
	25-23005-303	• • • • SPAR ASSEMBLY, FIN FRONT	1	
	25-23003- 1	• • • • • FITTING ASSEMBLY, FIN FRONT SPAR ATTACHMENT	1	
- 24	25-23003- 5	• • • • • • • FITTING	1	
- 25	25-23005- 27	• • • • • SHIM	AR	C-F
- 26	25-23039- 1	• • • • • BRACKET ASSY, RUDDER FEEL SYSTEM SPRING CARTRIDGE SUPPORT	1	
	4M34-4-16	• • • • • • • BUSHING (MDA) LEFT SIDE	1	
	25-21043- 5	• • • • • • • BUSHING, PLAIN EMPENNAGE, RIGHT SIDE	1	
- 27	25-23047- 3	• • • • FITTING, FIN STABILATOR ACTUATOR SUP.	1	
- 28	25-23036- 7	• • • • TUBE, ELEV FEEL SYS, 98.70 IN. LONG	1	
- 29	25-23035- 1	• • • • HEAD ASSY, ELEV FEEL SYSTEM	1	A-B
	25-23035-301	• • • • HEAD ASSY, ELEV FEEL SYSTEM	1	C-F
	25-78007- 1	• • • • CONDUIT INSTL, LE VERTICAL FIN	1	
- 30	25-78007- 3	• • • • • CONDUIT	1	
- 31	25-78056- 1	• • • • • CLAMP ASSY, CHANNEL & U-BOLT	2	
- 32	25-87095- 3	• • • • SPRING, FIN CAP ANTENNA BONDING	2	
- 33	25-23002- 95	• • • • DOOR ASSY, STABILATOR DAMPER	1	
		ATTACHING PARTS		
	AN253-5-955	• • • • PIN, HINGE	1	
		¤----¤-¤-¤----¤		
- 34	98265-2-.170	• • • • • STUD (MKL) USE WITH 99947P.130 RECEPTACLE (MKL)	2	
	99836	• • • • • PIN, CROSS (MKL)	2	
- 35	98265-2-.200	• • • • • STUD (MKL) USE WITH 99947P.130 RECEPTACLE (MKL)	1	
	99836	• • • • • PIN, CROSS (MKL)	1	
- 36	98265-1-.140	• • • • • STUD (MKL) USE WITH 99947P.130 RECEPTACLE (MKL)	6	
	99836	• • • • • PIN, CROSS (MKL)	6	
- 37	25-23002- 91	• • • • • HINGE, HALF, ALTERED FROM 9M27H1A955 (MDA)	1	
- 38	25-23002- 93	• • • • • HINGE, HALF, ALTERED FROM 9M27H1A955 (MDA)	1	
	25-23049- 3	• • • • • PLATE, STABILATOR DAMPER	1	
		SERVICING INSTRUCTIONS		
	25-78001- 1	• • • WIRING INSTALLATION, FIN	1	
	25-79000-217	• • • • BUNDLE ASSEMBLY, WIRE	1	
- 39	3106BS14S2S	• • • • • PLUG (CED) G-2 COMPASS TRANSMITTER USE WITH MS29513-14 O RING	1	
	25-79000-218	• • • • BUNDLE ASSEMBLY, WIRE	1	
- 40	UG21B/U	• • • • • PLUG, COAXIAL	2	
	25-69003- 3	• • • HYDRAULIC INSTALLATION, FIN	1	
- 41	25-69128-113	• • • • TUBE ASSEMBLY, UTILITY RETURN	1	
- 42	7M18D4	• • • • ELBOW, HYDRAULIC SWIVEL (MDA)	4	
	AN924-4D	• • • • NUT, USE WITH INDEX 42	4	
- 43	25-69128-111	• • • • TUBE ASSEMBLY, UTILITY PRESSURE	1	
- 44	MS21902D4	• • • • UNION	1	
	AN6290-4	• • • • GASKET, USE WITH INDEX 44	1	
- 45	AN939D4	• • • • ELBOW	1	
	AN6289D4	• • • • NUT, USE WITH INDEX 45	1	
	AN6291-4	• • • • RING, BACK UP, USE WITH INDEX 45	1	
	AN6290-4	• • • • GASKET, USE WITH INDEX 45	1	
- 46	MS21903D4	• • • • UNION	2	
	AN924-4D	• • • • NUT, USE WITH INDEX 46	2	
- 47	25-69207- 69	• • • • TUBE ASSEMBLY, POWER CONTROL PRESSURE	1	
- 48	25-69207- 71	• • • • TUBE ASSEMBLY, POWER CONTROL RETURN	1	
- 49	25-69195-183	• • • • HOSE ASSEMBLY, POWER CONTROL PRESSURE	1	
	ER6292-4-18.5	• • • • • HOSE ASSEMBLY (WH)	1	

FIGURE & INDEX NUMBER	PART NUMBER	1	2	3	4	5	6	7	DESCRIPTION	UNITS PER ASS'Y	USABLE ON CODE
39 - 50	25-69195-187	•	•	•	•				HOSE ASSEMBLY, POWER CONTROL PRESSURE	1	
	ER6292-4-14.5	•	•	•	•				• HOSE ASSEMBLY (WH)	1	
- 51	25-69195-185	•	•	•	•				HOSE ASSEMBLY, POWER CONTROL RETURN	1	
	ER6292-4-15	•	•	•	•				• HOSE ASSEMBLY (WH)	1	
- 52	25-69195-189	•	•	•	•				HOSE ASSEMBLY, POWER CONTROL RETURN	1	
	ER6292-4-14.5	•	•	•	•				• HOSE ASSEMBLY (WH)	1	
- 53	7M7D4	•	•	•	•				SWIVEL ASSEMBLY, HYDRAULIC (MDA)	8	
	AN6290-4	•	•	•	•				GASKET, USE WITH INDEX 53	8	

Tail Group

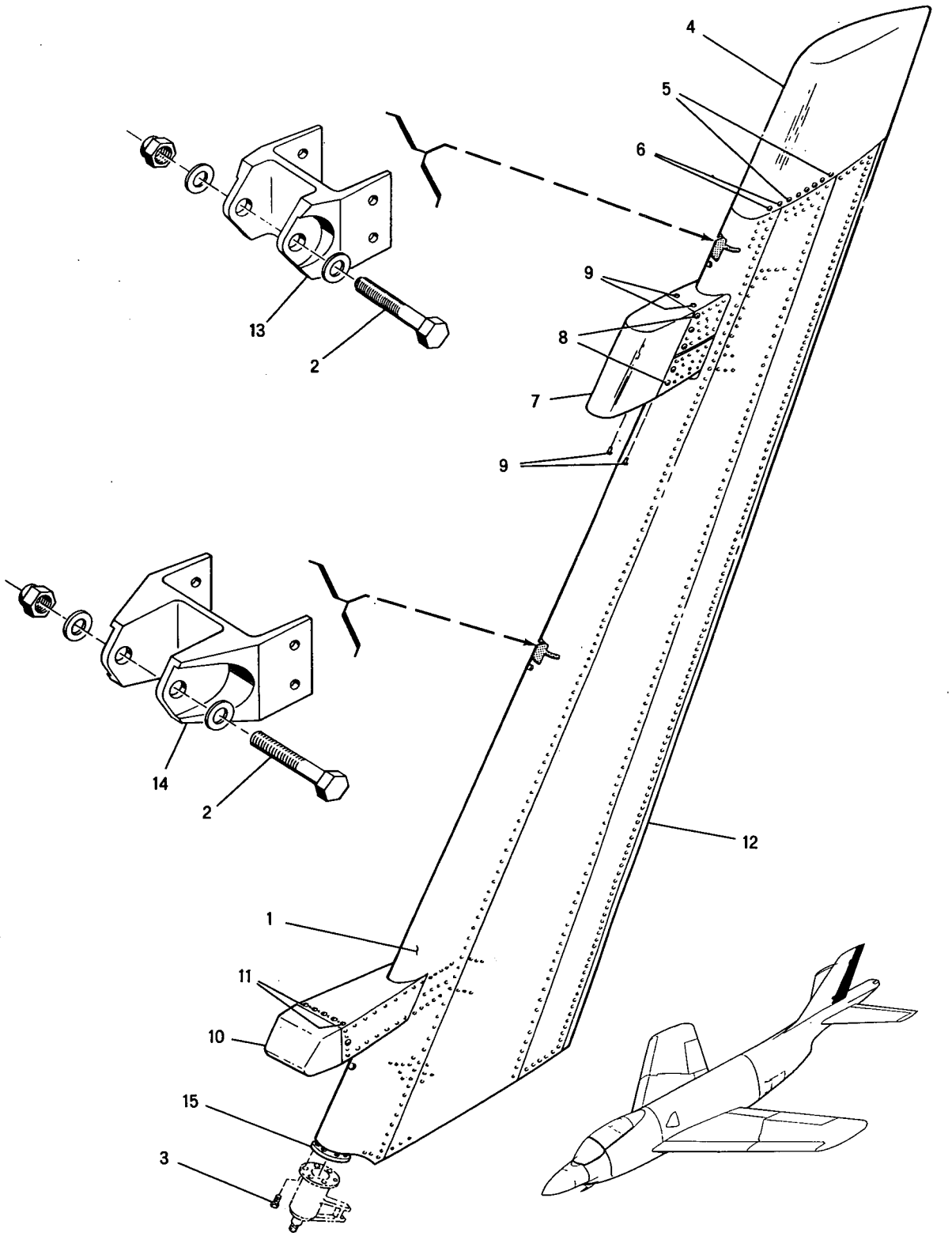

Figure 40 -- Rudder Installation

FIGURE & INDEX NUMBER	PART NUMBER	1 2 3 4 5 6 7 DESCRIPTION	UNITS PER ASS'Y	USABLE ON CODE
40 -	25-24000- 1	RUDDER INSTL, SEE FIG. 1-6 FOR NEXT HIGHER ASSY	1	
- 1	25-24002- 1	• RUDDER ASSY, STRUCT	1	
		ATTACHING PARTS		
- 2	AN4-17A	• BOLT	2	
	AN960PD416L	• WASHER	2	
	AN960PD416	• WASHER	2	
	AN365-428	• NUT	2	
- 3	NAS144-15	• BOLT	6	
		¤----¤-¤-¤----¤		
- 4	25-24006- 1	• • TIP ASSY, RUDDER	1	
		ATTACHING PARTS		
- 5	AN509-10R10	• • SCREW, AFT	11	
- 6	AN509-10R12	• • SCREW, FWD	4	
		¤----¤-¤-¤----¤		
	25-24008- 1	• • BOX ASSEMBLY, UPPER RUDDER BALANCE WEIGHT	1	A-B
	25-24024- 1	• • BOX ASSEMBLY, UPPER RUDDER BALANCE WEIGHT	1	C-F
- 7	25-24008- 7	• • • WEIGHT ASSEMBLY	1	A-B
	25-24024- 3	• • • WEIGHT ASSEMBLY	1	C-F
		ATTACHING PARTS		
- 8	AN509-10R10	• • • SCREW	10	
- 9	AN509-10R9	• • • SCREW	4	A-B
	AN509-10R10	• • • SCREW	4	C-F
		¤----¤-¤-¤----¤		
	25-24007- 1	• • BOX ASSEMBLY, LOWER RUDDER BALANCE WEIGHT	1	A-B
	25-24013- 1	• • BOX ASSEMBLY, LOWER RUDDER BALANCE WEIGHT	1	C-F
- 10	25-24007- 21	• • • WEIGHT ASSEMBLY	1	A-B
	25-24013- 9	• • • WEIGHT ASSEMBLY	1	C-F
		ATTACHING PARTS		
- 11	AN509-10R10	• • • SCREW	12	
		¤----¤-¤-¤----¤		
- 12	25-24002- 19	• • TRAILING EDGE	1	
- 13	25-24010- 3	• • FITTING, RUDDER HINGE UPPER SUPPORT	1	
- 14	25-24015- 3	• • FITTING, RUDDER HINGE CENTER SUPPORT	1	
- 15	25-24023- 3	• • FITTING, RUDDER TORQUE TUBE	1	

Removable Nose

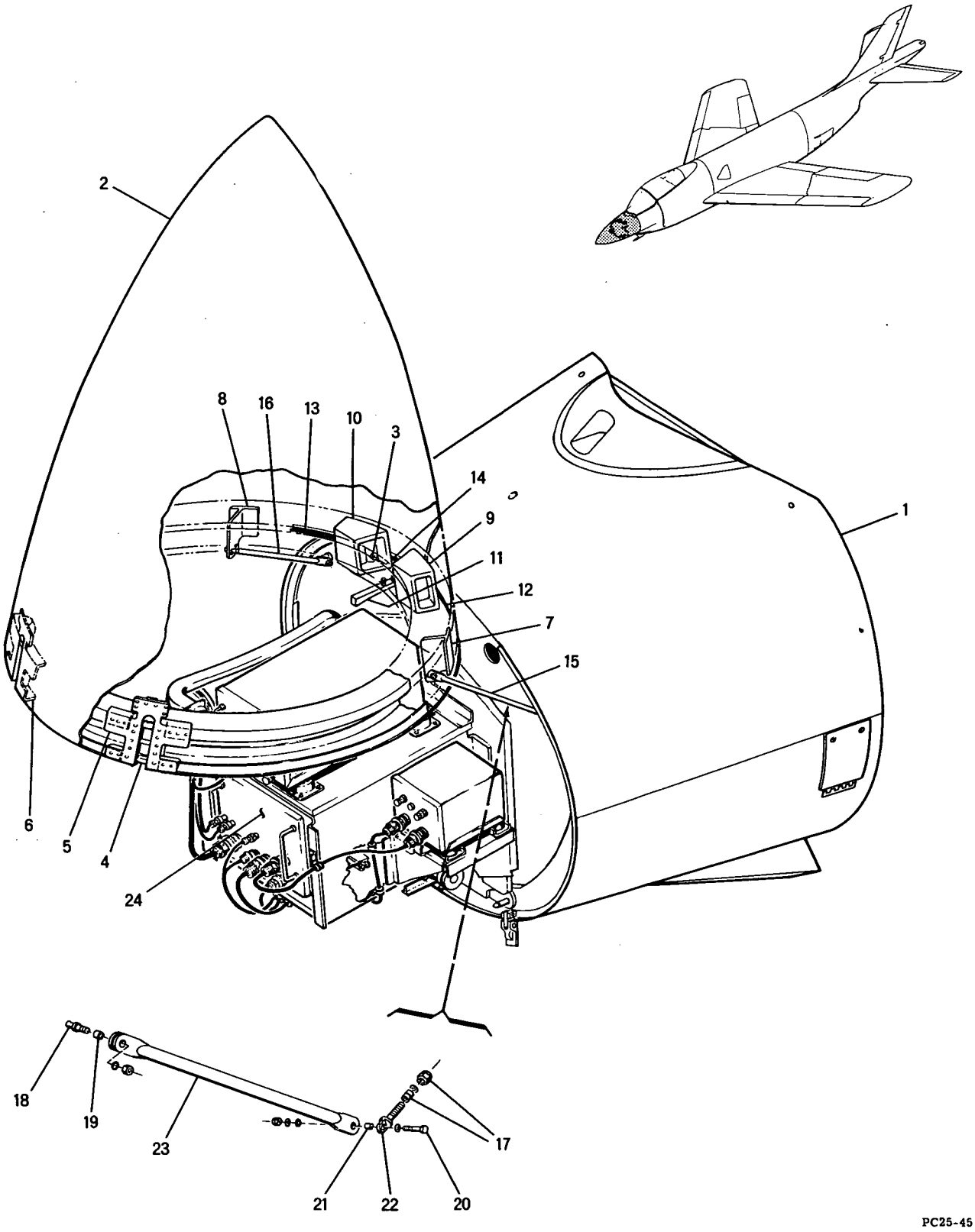

Figure 41 -- Removable Nose Assembly

FIGURE & INDEX NUMBER	PART NUMBER	1 2 3 4 5 6 7 DESCRIPTION	UNITS PER ASS'Y	USABLE ON CODE
41 -	25-30010- 1	NOSE ASSEMBLY, REMOVABLE, SEE FIG. 1-8 FOR NEXT HIGHER ASSEMBLY	1	A
	25-30010-301	NOSE ASSEMBLY, REMOVABLE, SEE FIG. 1-8 FOR NEXT HIGHER ASSEMBLY	1	B
	25-30010-305	NOSE ASSEMBLY, REMOVABLE, SEE FIG. 1-8 FOR NEXT HIGHER ASSEMBLY	1	C-F
	25-30010- 3	. NOSE ASSEMBLY, RADOME & STRUCTURAL	1	A
	25-30010-303	. NOSE ASSEMBLY, RADOME & STRUCTURAL	1	B
	25-30010-307	. NOSE ASSEMBLY, RADOME & STRUCTURAL	1	C-F
- 1	25-30011- 1	. . NOSE ASSEMBLY, STRUCTURAL REMOVABLE, SEE FIG. 43	1	A
	25-30011-303	. . NOSE ASSEMBLY, STRUCTURAL REMOVABLE, SEE FIG. 43	1	B
	25-30011-305	. . NOSE ASSEMBLY, STRUCTURAL REMOVABLE, SEE FIG. 43	1	C-F
- 2	25-30040- 1	. . RADOME ASSEMBLY	1	
		ATTACHING PARTS		
- 3	NAS145-20	. . BOLT	2	
	AN960D516	. . WASHER	2	
	1452-054	. . NUT, BARREL (EN)	2	
		¤----¤-¤-¤----¤		
- 4	25-30082- 1	. . . HOUSING ASSY, RADOME LOWER LATCH, ALTERED FROM 117206 (SA)	2	
- 5	25-30050- 3	. . . FITTING, RADOME ATTACHMENT FORWARD LH	1	
- 6	25-30050- 4	. . . FITTING, RADOME ATTACHMENT FORWARD RH	1	
- 7	25-30066- 1	. . . TEE ASSY, RADOME ROD ATTACHMENT LH	1	
- 8	25-30066- 2	. . . TEE ASSY, RADOME ROD ATTACHMENT RH	1	
	A1663-032-3	. . . . CATCH, SPRING (TIN)	1	
- 9	25-30041- 3	. . . FITTING, RADOME HINGE LH	1	
- 10	25-30041- 4	. . . FITTING, RADOME HINGE RH	1	
- 11	25-30062- 3	. . . STRIKER, RADAR UPPER LATCH	1	
		ATTACHING PARTS		
	AN509-10R16	. . . SCREW, UPPER	1	
	AN960D10	. . . WASHER	1	
	AN509-10R16	. . . SCREW, LOWER	1	
	AN960D10	. . . WASHER	1	
	AN960D10L	. . . WASHER	1	
		¤----¤-¤-¤----¤		
	25-30048- 3	. . . FRAME ASSY, RADOME AFT	1	
- 12	25-30048- 13	. . . . SEAL LH, SELECTED FROM 11M601 (MDA)	1	
- 13	25-30048- 14	. . . . SEAL RH, SELECTED FROM 11M601 (MDA)	1	
- 14	25-30048- 15	. . . . SEAL, CENTER, SELECTED FROM 11M601 (MDA)	1	
	25-87093- 3	. . . RADOME, NOSE	1	
- 15	25-30064- 1	. . ROD ASSY, RADOME SUPPORT LH	1	
- 16	25-30064- 2	. . ROD ASSY, RADOME SUPPORT RH	1	
		ATTACHING PARTS		
- 17	AN365-524	. . NUT	2	
	AN960D516	. . WASHER	2	
	NAS72-5-007	. . BUSHING	2	
		¤----¤-¤-¤----¤		
- 18	25-30064- 5	. . . PIN	1	
- 19	NAS43-4-20	. . . SPACER	1	
	AN960-416	. . . WASHER	1	
	AN365-428	. . . NUT	1	
- 20	AN4-10A	. . . BOLT	1	
	AN960-416L	. . . WASHER	1	
- 21	NAS43-4-20	. . . SPACER	1	
	AN960-416	. . . WASHER	2	
	AN364-428	. . . NUT	1	
- 22	AN44-7A	. . . BOLT, EYE	1	
- 23	25-30064- 3	. . . ROD	1	
- 24	25-87027- 1	. EQUIPMENT INSTL, REMOVABLE NOSE RADAR, SEE FIG. 42	1	A
	25-87027-301	. EQUIPMENT INSTL, REMOVABLE NOSE RADAR, SEE FIG. 42	1	B
	25-87027-303	. EQUIPMENT INSTL, REMOVABLE NOSE RADAR, SEE FIG. 42	1	C

Removable Nose

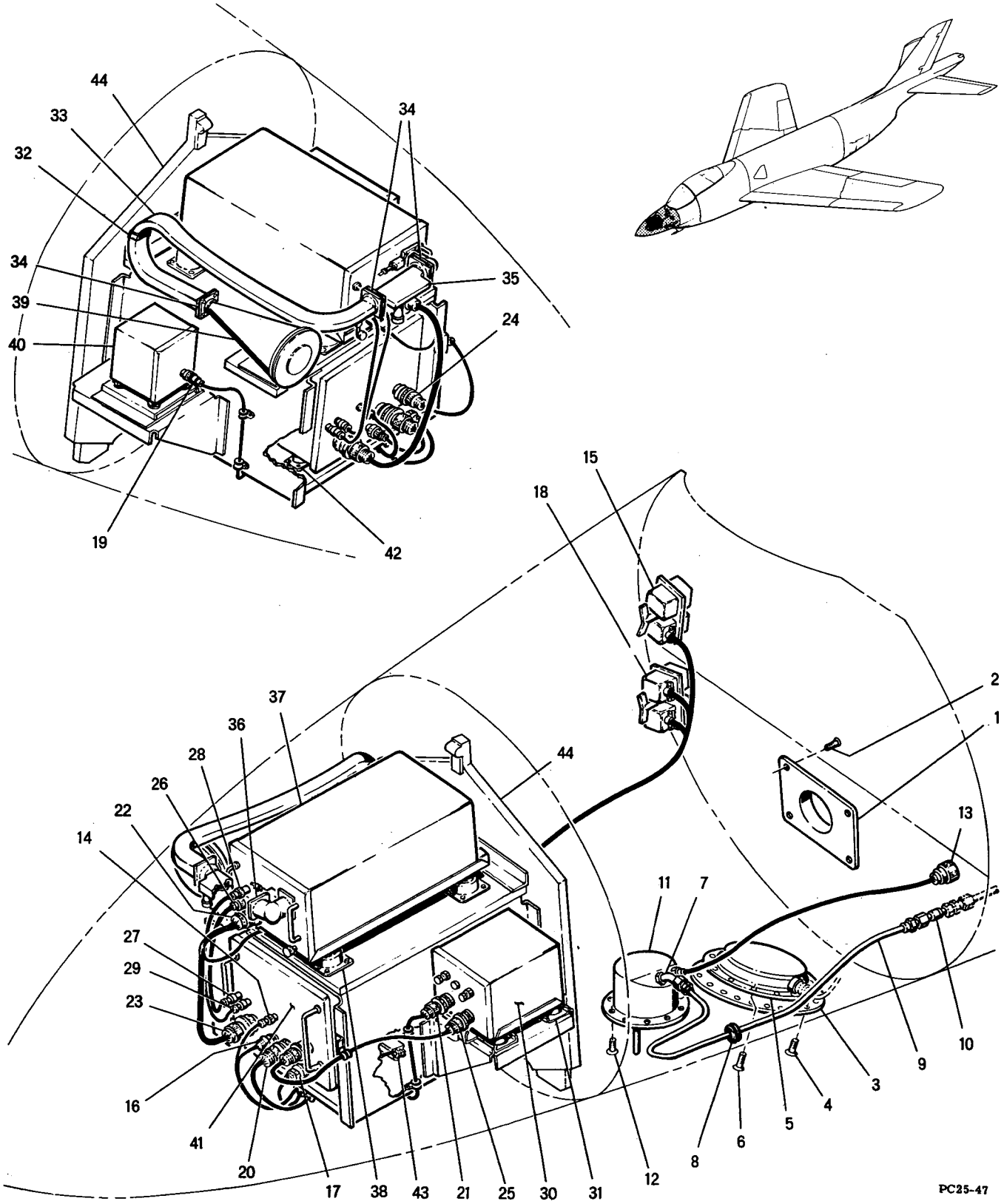

Figure 42 -- Removable Nose Radar Equipment Installation

FIGURE & INDEX NUMBER	PART NUMBER	1 2 3 4 5 6 7 DESCRIPTION	UNITS PER ASS'Y	USABLE ON CODE
42 -	25-87027- 1	EQUIPMENT INSTALLATION, REMOVABLE NOSE RADAR, SEE FIG. 41-24 FOR NEXT HIGHER ASSEMBLY	REF	A
	25-87027-301	EQUIPMENT INSTALLATION, REMOVABLE NOSE RADAR, SEE FIG. 41-24 FOR NEXT HIGHER ASSEMBLY	REF	B
	25-87027-303	EQUIPMENT INSTALLATION, REMOVABLE NOSE RADAR, SEE FIG. 41-24 FOR NEXT HIGHER ASSEMBLY	REF	C
- 1	25-87103- 1	. ADAPTER ASSEMBLY, RADAR GROUND COOLING	1	
		ATTACHING PARTS		
- 2	NAS229-10R10	. SCREW	4	
	AN960D10L	. WASHER	4	
	AN364-1032	. NUT	4	
		¤----¤-¤-¤----¤		
- 3	25-76126- 3	. WINDOW, AT234/APX ANTENNA	1	B-F
		ATTACHING PARTS		
- 4	AN509-10R12	. SCREW	26	
		¤----¤-¤-¤----¤		
- 5	AT234/APX	. ANTENNA (CFM)	1	B-F
		ATTACHING PARTS		
- 6	AN507-832R10	. SCREW	12	
		¤----¤-¤-¤----¤		
- 7	AN837-4D	. ELBOW	1	C-F
	AN924-4D	. NUT, USE WITH INDEX 7	1	C-F
	AN901-4A	. GASKET, USE WITH INDEX 7	1	C-F
- 8	AN931-12-17	. GROMMET	1	C-F
- 9	AN6270-4-26	. HOSE ASSEMBLY	1	C-F
- 10	D101	. BODY (WIG)	1	C-F
- 11	45204	. TRANSDUCER, AIRSTREAM DIRECTION (AIR) MCDONNELL SPEC 25-60009-3	1	C-F
		ATTACHING PARTS		
- 12	AN509-10R13	. SCREW	6	
		¤----¤-¤-¤----¤		
- 13	AN3106M20-33P	. . PLUG, USE WITH MS29513-20 O RING	1	C-F
	25-87104- 1	. EQUIPMENT INSTL, AN/APG30 RADAR REMOVABLE	1	A-C
	25-79000-174	. . BUNDLE ASSY, WIRE	1	A-C
- 14	BJ055B	. . . PLUG, PHONE (SWIN)	1	A-C
- 15	19764-8	. . . PLUG, DISCONNECT (CED)	1	A-C
- 16	3106BS14S2P	. . . PLUG (CED) RANGE COMPUTER POWER SUPPLY, USE WITH MS29513-14 O RING	1	A-C
- 17	3106BS20-27P	. . . PLUG (CED) RANGE COMPUTER POWER SUPPLY, USE WITH MS29513-20 O RING	1	A-C
	25-79000-182	. . BUNDLE ASSY, WIRE	1	A-C
- 18	19761-3	. . . PLUG, DISCONNECT (CED)	1	A-C
- 19	3106BS14S5SX	. . . PLUG (CED) MK87 MOD O RANGE COMPUTER, USE WITH MS29513-14 O RING	1	A-C
- 20	3106BS28-17P	. . . PLUG (CED) RANGE COMPUTER POWER SUPPLY, USE WITH MS29513-28 O RING	1	A-C
- 21	3106BS20-15S	. . . PLUG (CED) CN112/APG30 VOLTAGE REGULATOR USE WITH MS29513-20 O RING	1	A-C
	25-79000-196	. . BUNDLE ASSY, WIRE	1	A-C
- 22	3106BS32-13S	. . . PLUG (CED) FREQ CONVERTER TRANSMITTER, USE WITH MS29513-28 O RING	1	A-C
- 23	3106BS32-13P	. . . PLUG (CED) RANGE COMPUTER POWER SUPPLY, USE WITH MS29513-28 O RING	1	A-C
	25-79000-198	. . BUNDLE ASSY, WIRE	1	A-C
- 24	3106BS20-18S	. . . PLUG (CED) RANGE COMPUTER POWER SUPPLY, USE WITH MS29513-20 O RING	1	A-C
- 25	3106BS20-18P	. . . PLUG (CED) CN112/APG30 VOLTAGE REGULATOR USE WITH MS29513-20 O RING	1	A-C
	25-79000-254	. . BUNDLE ASSY, WIRE	1	A-C
- 26	UG260/U	. . . PLUG, COAXIAL, FREQUENCY CONVERTER TRANSMITTER	1	A-C
- 27	UG260/U	. . . PLUG, COAXIAL, RANGE COMPUTER POWER SUPPLY	1	A-C
	25-79000-256	. . BUNDLE ASSY, WIRE	1	A-C
- 28	UG260/U	. . . PLUG, COAXIAL, FREQUENCY CONVERTER TRANSMITTER	1	A-C
- 29	UG260/U	. . . PLUG, COAXIAL, RANGE COMPUTER POWER SUPPLY	1	A-C
- 30	CN112/APG30	. . REGULATOR, VOLTAGE, GFP	1	A-C
- 31	MT708/APG30	. . MOUNTING, VOLTAGE REGULATOR, GFP	1	A-C
		ATTACHING PARTS		
	AN515-8R10	. . SCREW	8	
	AN960D8L	. . WASHER	8	
	AN365-832	. . NUT	8	
		¤----¤-¤-¤----¤		

FIGURE & INDEX NUMBER	PART NUMBER	1 2 3 4 5 6 7 DESCRIPTION	UNITS PER ASS'Y	USABLE ON CODE
42 - 32	668-3	• • CLAMP, STRAP (AP)	1	A-C
		ATTACHING PARTS		
	NAS229-12	• • SCREW	1	
	AN960D10L	• • WASHER	1	
	AN364-1032	• • NUT	1	
		¤----¤-¤-¤----¤		
- 33	BN216-3600	• • WAVE GUIDE, FLEXIBLE (AITR)	1	A-C
		ATTACHING PARTS		
	AN515-8R7	• • SCREW	4	
	AN935-8	• • WASHER, LOCK	4	
		¤----¤-¤-¤----¤		
- 34	BG616-201	• • GASKET (AITR)	3	A-C
- 35	CU217/U	• • COUPLER, DIRECTIONAL, GFP	1	A-C
		ATTACHING PARTS		
	AN515-8R7	• • SCREW	4	
	AN935-8	• • WASHER, LOCK	4	
		¤----¤-¤-¤----¤		
- 36	H17835B	• • ELBOW (AITR)		A-C
		ATTACHING PARTS		
	AN515-8R7	• • SCREW	8	
	AN935-8	• • WASHER, LOCK	8	
		¤----¤-¤-¤----¤		
- 37	RT181/APG30	• • TRANSMITTER, FREQUENCY CONVERTER, GFP	1	A-C
- 38	MT707/APG30	• • MOUNTING, FREQ CONVERTER TRANSMITTER, GFP	1	A-C
		ATTACHING PARTS		
	AN515-8R14	• • SCREW	16	
	AN960D8L	• • WASHER	16	
	AN365-832	• • NUT	16	
		¤----¤-¤-¤----¤		
- 39	AT245/APG30	• • ANTENNA, HORN, GFP	1	A-C
		ATTACHING PARTS		
	AN515-6R14	• • SCREW	4	
	AN960D6L	• • WASHER	4	
	AN365-632	• • NUT	4	
		¤----¤-¤-¤----¤		
- 40	NO NUMBER	• • COMPUTER, RANGE RATE, MK87 MOD 0, GFP	1	A-C
		ATTACHING PARTS		
	AN3-10A	• • BOLT	4	
	AN960D10L	• • WASHER	4	
	AN960D10	• • WASHER	4	
	AN365-1032	• • NUT	4	
		¤----¤-¤-¤----¤		
- 41	PP493/APG30	• • POWER SUPPLY, RANGE COMPUTER, GFP	1	A-C
- 42	MT739/U	• • MOUNTING, RANGE COMPUTER POWER SUPPLY, GFP	1	A-C
		ATTACHING PARTS		
	AN515-8R14	• • SCREW	16	
	AN960D8L	• • WASHER	16	
	AN365-832	• • NUT	16	
		¤----¤-¤-¤----¤		
- 43	5M7-10-6	• • PANEL ASSEMBLY, ELECTRICAL CONNECTOR (MDA)	1	A-C
	5M8-10-6	• • COVER, PANEL ASSEMBLY (MDA) USE WITH INDEX 43	1	A-C
- 44	25-87105- 1	• • SUPPORT ASSEMBLY, APG30 RADAR	1	A-C

FIGURE & INDEX NUMBER	PART NUMBER	1 2 3 4 5 6 7 DESCRIPTION	UNITS PER ASS'Y	USABLE ON CODE
43 -	25-30011- 1	NOSE ASSY, STRUCTURAL REMOVABLE, SEE FIG. 41-1 FOR NEXT HIGHER ASSEMBLY	REF	A
	25-30011-303	NOSE ASSY, STRUCTURAL REMOVABLE, SEE FIG. 41-1 FOR NEXT HIGHER ASSEMBLY	REF	B
	25-30011-305	NOSE ASSY, STRUCTURAL REMOVABLE, SEE FIG. 41-1 FOR NEXT HIGHER ASSEMBLY	REF	C-F
	25-30011- 3	. NOSE ASSEMBLY, UPPER STRUCTURAL REMOVABLE	1	
	25-30063- 1	. . INTERCOSTAL ASSY, RADOME HINGE SUPPORT, LH	1	
	25-30063- 2	. . INTERCOSTAL ASSY, RADOME HINGE SUPPORT, RH	1	
- 1	25-30032- 3	. . . HINGE, RADOME MALE LH	1	
- 2	25-30032- 4	. . . HINGE, RADOME MALE RH	1	
		ATTACHING PARTS		
- 3	AN5-10A	. . . BOLT, FWD	2	
	AN960PD516L	. . . WASHER	2	
	AN960PD516	. . . WASHER	2	
	AN365-524	. . . NUT	2	
- 4	AN5-7A	. . . BOLT, AFT	2	
	AN960PD516L	. . . WASHER	2	
	AN960PD516	. . . WASHER	2	
	AN365-524	. . . NUT	2	
		¤----¤-¤-¤----¤		
- 5	25-30059- 3	. . SPRING, RADAR UPPER LATCH	2	
		ATTACHING PARTS		
- 6	AN23-27	. . BOLT	2	
	AN960-10	. . WASHER	4	
	AN960D10	. . WASHER	4	
	AN960-10L	. . WASHER	2	
	AN320-3	. . NUT	2	
	AN380-2-2	. . PIN, COTTER	2	
		¤----¤-¤-¤----¤		
- 7	25-30060- 3	. . LINK, RADAR UPPER LATCH	2	
		ATTACHING PARTS		
- 8	AN24-31	. . BOLT	2	
	AN960D416L	. . WASHER	4	
	4M36-02015	. . WASHER (MDA)	4	
	AN960D416	. . WASHER	2	
	AN320-4	. . NUT	2	
	AN380-2-3	. . PIN, COTTER	2	
		¤----¤-¤-¤----¤		
- 9	25-30061- 1	. . LATCH ASSEMBLY, RADAR UPPER	1	
- 10	52-048-250-1500	. . . PIN, ROLL (EN)	1	
- 11	25-30058- 3	. . CAM, RADAR UPPER LATCH	1	
		ATTACHING PARTS		
- 12	AN3-7A	. . BOLT	2	
	AN960D10	. . WASHER	2	
		¤----¤-¤-¤----¤		
- 13	25-30034- 1	. . FITTING ASSEMBLY, RADAR LATCH UPPER	1	
- 14	25-30057- 3	. . . PIN, RADAR UPPER LATCH	1	
		ATTACHING PARTS		
- 15	52-048-250-1000	. . . PIN, ROLL (EN)	1	
		¤----¤-¤-¤----¤		
- 16	25-30068- 1	. . BLOCK ASSY, REMOVABLE NOSE HOIST ATTACHMENT	1	
		ATTACHING PARTS		
- 17	AN3-7A	. . BOLT, LOWER	4	
	AN960D10	. . WASHER	12	
	AN365-1032	. . NUT	4	
- 18	AN3-10A	. . BOLT, UPPER	4	
	AN960D10	. . WASHER	12	
	AN365-1032	. . NUT	4	
		¤----¤-¤-¤----¤		
- 19	25-30077- 3	. . . BUSHING, REMOVABLE NOSE HOIST ATTACHMENT	1	
- 20	25-30024- 3	. . FITTING, REMOVABLE NOSE ATTACHMENT UPPER LH	1	A-B
	25-30024- 5	. . FITTING, REMOVABLE NOSE ATTACHMENT UPPER LH	1	C-F
- 21	25-30024- 4	. . FITTING, REMOVABLE NOSE ATTACHMENT UPPER RH	1	A-B
	25-30024- 6	. . FITTING, REMOVABLE NOSE ATTACHMENT UPPER RH	1	C-F
- 22	25-30079- 1	. . DUCT ASSEMBLY, RADAR AIR INTAKE	1	
- 23	25-30011- 19	. . HOSE	2	
- 24	25-30086- 1	. . OUTLET ASSEMBLY, DRIP PAN	2	
- 25	25-30011- 23	. . SEAL, SELECTED FROM 11M600 (MDA)	1	
	25-30011- 5	. NOSE ASSEMBLY, LOWER STRUCTURAL REMOVABLE	1	A
	25-30011-301	. NOSE ASSEMBLY, LOWER STRUCTURAL REMOVABLE	1	B
	25-30011-307	. NOSE ASSEMBLY, LOWER STRUCTURAL REMOVABLE	1	C-F

Removable Nose

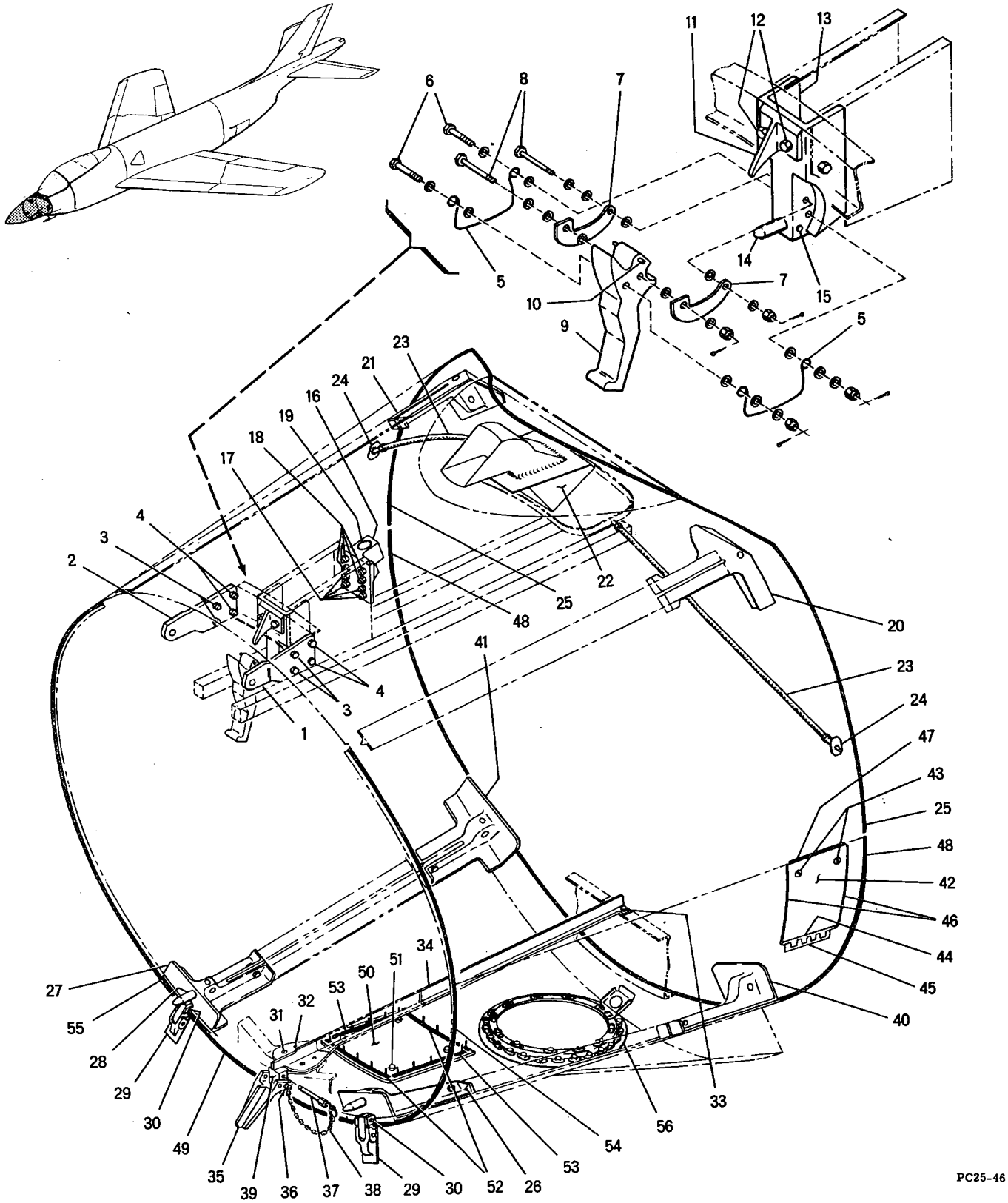

Figure 43 -- Structural Removable Nose Assembly

FIGURE & INDEX NUMBER	PART NUMBER	1 2 3 4 5 6 7 DESCRIPTION	UNITS PER ASS'Y	USABLE ON CODE
43 - 26	25-30031- 1	. . FITTING ASSY, RADOME & RADAR AFT ATTACHMENT LH	1	
- 27	25-30031- 2	. . FITTING ASSY, RADOME & RADAR AFT ATTACHMENT RH	1	
- 28	25-30053- 5	. . . PIN, RADOME & RADAR ATTACHMENT	1	
- 29	25-30082- 3	. . LATCH ASSEMBLY, RADOME LOWER, ALTERED FROM 117311 (SA)	2	
		ATTACHING PARTS		
- 30	52-048-250-1125	. . PIN, ROLL (EN)	2	
		¤----¤-¤-¤----¤		
	25-30091- 1	. . RAIL ASSY, RADAR LOWER GUIDE	1	
		ATTACHING PARTS		
- 31	AN509-516R16	. . SCREW	2	
	AN960D516	. . WASHER	2	
	AN364-524	. . NUT	2	
- 32	AN509-10R14	. . SCREW	2	
	AN960D10	. . WASHER	2	
	AN365-1032	. . NUT	2	
- 33	AN509-10R10	. . SCREW	2	
	AN960D10	. . WASHER	2	
	AN365-1032	. . NUT	2	
		¤----¤-¤-¤----¤		
- 34	25-30093- 3	. . . RAIL, RADAR AFT LOWER GUIDE	1	
- 35	25-30092- 3	. . . RAIL, RADAR FWD LOWER GUIDE	1	
		ATTACHING PARTS		
- 36	AN23-29	. . . BOLT	1	
	AN960D10	. . . WASHER	3	
	AN320-1032	. . . NUT	1	
	AN381-2-8	. . . PIN, COTTER	1	
		¤----¤-¤-¤----¤		
- 37	A413	. . . PIN (AVDE)	1	
- 38	RS106A60	. . . CHAIN ASSY (RYY)	1	
- 39	25-30094- 3	. . . FITTING, RADAR LOWER GUIDE RAIL	1	
- 40	25-30054- 3	. . FITTING, REMOVABLE NOSE ATTACHMENT LOWER LH	1	
- 41	25-30054- 4	. . FITTING, REMOVABLE NOSE ATTACHMENT LOWER RH	1	
- 42	25-30075- 3	. . DOOR ASSEMBLY, ELECTRICAL ACCESS LH	1	
	25-30075- 4	. . DOOR ASSEMBLY, ELECTRICAL ACCESS RH	1	
- 43	98265-2-.220	. . . STUD (MKL) USE WITH 99833P.130 RECEPTACLE (MKL)	2	
	99836	. . . PIN, CROSS (MKL)	2	
- 44	25-30075- 13	. . . HINGE, HALF, ALTERED FROM 9M27HY1A400 (MDA)	1	
- 45	25-30075- 15	. . . HINGE, HALF, ALTERED FROM 9M27HX3A400 (MDA)	1	
	AN253-5-400	. . . PIN, HINGE	1	
	25-30075- 5	. . DOUBLER ASSY LH	1	
	25-30075- 6	. . DOUBLER ASSY RH	1	
- 46	9M79-32B588	. . . STRIP, SEALING (MDA)	2	
- 47	9M79-31B513	. . . STRIP, SEALING (MDA)	1	
- 48	25-30011- 21	. . SEAL, SELECTED FROM 11M600 (MDA)	1	
	25-30070- 3	. . ANGLE ASSY, RADOME SEAL SUPPORT	1	
- 49	25-30070- 11	. . . SEAL, SELECTED FROM 11M601 (MDA)	1	
- 50	25-30011- 45	. . DOOR	1	C-F
- 51	98265-2-.190	. . STUD (MKL) USE WITH 99833P.130 RECP (MKL)	4	C-F
	99836	. . PIN, CROSS (MKL)	4	C-F
- 52	9M79-65B582	. . STRIP, SEALING (MDA)	2	C-F
- 53	9M79-49B547	. . STRIP, SEALING (MDA)	2	C-F
	25-30070- 1	. ANGLE ASSY, RADOME SEAL SUPPORT, LH	1	
	25-30070- 2	. ANGLE ASSY, RADOME SEAL SUPPORT, RH	1	
- 54	25-30070- 9	. . SEAL LH, SELECTED FROM 11M601 (MDA)	1	
- 55	25-30070- 10	. . SEAL RH, SELECTED FROM 11M601 (MDA)	1	
- 56	25-30088- 1	. . RING ASSEMBLY, AT234/APX MOUNTING	1	

Forward Fuselage

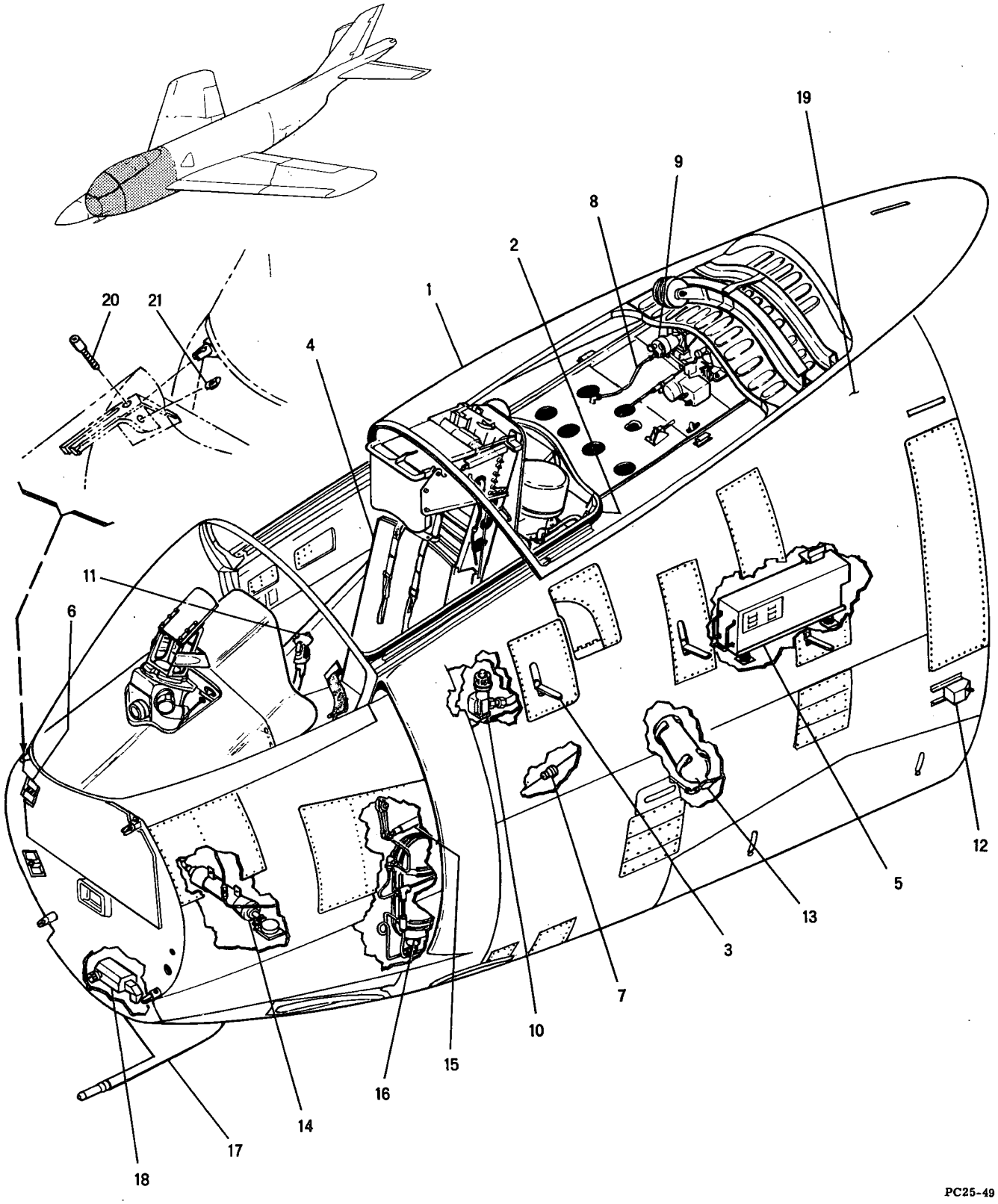

Figure 44 -- Forward Fuselage Installation

FIGURE & INDEX NUMBER	PART NUMBER	1 2 3 4 5 6 7 DESCRIPTION	UNITS PER ASS'Y	USABLE ON CODE
44 -	25-31000- 1	FUSELAGE INSTALLATION, FORWARD, SEE FIG. 1-9 FOR NEXT HIGHER ASSY	1	A
	25-31000-301	FUSELAGE INSTALLATION, FORWARD, SEE FIG. 1-9 FOR NEXT HIGHER ASSY	1	B
	25-31000-303	FUSELAGE INSTALLATION, FORWARD, SEE FIG. 1-9 FOR NEXT HIGHER ASSY	1	C
	25-31001- 1	. FUSELAGE ASSEMBLY, FORWARD	1	A
	25-31001-301	. FUSELAGE ASSEMBLY, FORWARD	1	B
	25-31001-303	. FUSELAGE ASSEMBLY, FORWARD	1	C
- 1	25-35002- 1	. . CANOPY ASSEMBLY, SEE FIG. 53	1	
- 2	25-35016- 1	. . SEAL ASSEMBLY, CANOPY	1	
- 3	25-31074- 1	. . STEP INSTL, COCKPIT ACCESS, SEE FIG. 52	1	
- 4	25-80000- 1	. . FURNISHINGS INSTL, COCKPIT, SEE FIG. 73	1	
- 5	25-76000- 1	. . EQUIPMENT INSTL, FWD FUSELAGE ELECTRICAL, SEE FIG. 95	1	A-B
	25-76000-301	. . EQUIPMENT INSTL, FWD FUSELAGE ELECTRICAL, SEE FIG. 95	1	C-F
- 6	25-76001- 1	. . WIRING INSTL, FWD FUSELAGE, SEE FIG. 101, 102, 103 & 104	1	A
	25-76001-303	. . WIRING INSTL, FWD FUSELAGE, SEE FIG. 101, 102, 103 & 104	1	B
	25-76001-301	. . WIRING INSTL, FWD FUSELAGE, SEE FIG. 101, 102, 103 & 104	1	C
- 7	25-68100- 1	. . CONTROLS INSTL, FWD FUSELAGE AUXILIARY, SEE FIG. 59	1	
- 8	25-72014- 1	. . PNEUMATIC INSTL, CANOPY MECHANISM, SEE FIG. 62	1	
- 9	25-35003- 1	. . CONTROLS INSTL, CANOPY EMERGENCY SEE FIG. 54	1	
- 10	25-83000- 1	. . EQUIPMENT INSTL, FWD FUSELAGE HEAT & VENTILATING SYSTEM, SEE FIG. 65	1	A-B
	25-83000-301	. . EQUIPMENT INSTL, FWD FUSELAGE HEAT & VENTILATING SYSTEM, SEE FIG. 65	1	C-F
- 11	25-61100- 1	. . CONTROLS INSTL, FWD FUSELAGE SURFACE, SEE FIG. 55	1	A-B
	25-61100-301	. . CONTROLS INSTL, FWD FUSELAGE SURFACE, SEE FIG. 55	1	C-F
- 12	25-67301- 1	. . CONTROLS INSTL, FUSELAGE WING SLAT, SEE FIG. 60	1	
- 13	25-72003- 1	. . PNEUMATIC INSTL, MK 12 GUNS, SEE FIG. 63 & 64	1	
- 14	25-69186- 1	. . HYDRAULIC & EMERGENCY AIR INSTAL, FORWARD FUSELAGE, SEE FIG. 69, 70 & 71	1	
- 15	25-54100- 1	. . CONTROLS INSTL, FWD FUSELAGE ENGINE, SEE FIG. 61	1	
- 16	25-85000- 1	. . SYSTEM INSTL, OXYGEN, SEE FIG. 67	1	
- 17	25-60008- 1	. . SYSTEM INSTL, PITOT & STATIC, SEE FIG. 68	1	A-B
	25-60008-301	. . SYSTEM INSTL, PITOT & STATIC, SEE FIG. 68	1	C-F
- 18	25-71007- 1	. . CAMERA INSTL, GUN, SEE FIG. 72	1	
- 19	25-31002- 1	. . FUSELAGE ASSY, FWD STRUCTURAL, SEE FIG. 45	1	A
	25-31002-301	. . FUSELAGE ASSY, FWD STRUCTURAL, SEE FIG. 45	1	B-C
- 20	25-30056- 3	. BOLT, REMOVABLE NOSE ATTACHMENT	4	
- 21	32-1452-054	. NUT, BARREL (EN)	4	

Forward Fuselage

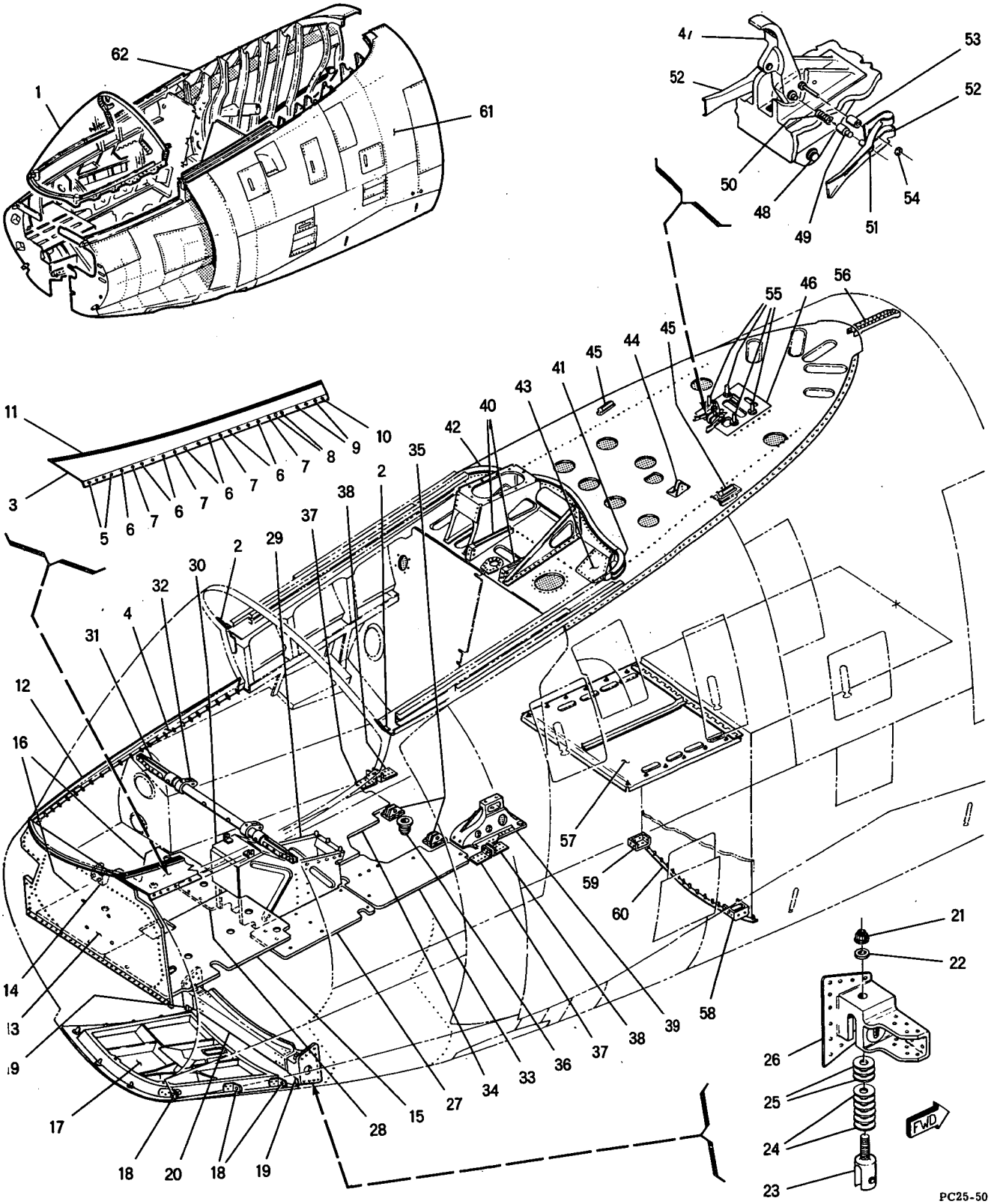

Figure 45 - Forward Structural Fuselage Assembly

FIGURE & INDEX NUMBER	PART NUMBER	1 2 3 4 5 6 7 DESCRIPTION	UNITS PER ASS'Y	USABLE ON CODE
45 -	25-31002- 1	FUSELAGE ASSEMBLY, FORWARD STRUCTURAL, SEE FIG. 44-19 FOR NEXT HIGHER ASSY	REF	A
	25-31002-301	FUSELAGE ASSEMBLY, FORWARD STRUCTURAL, SEE FIG. 44-19 FOR NEXT HIGHER ASSY	REF	B-C
- 1	25-35001- 1	. WINDSHIELD ASSEMBLY, SEE FIG. 51	1	
		ATTACHING PARTS, SEE FIG. 51		
		¤----¤-¤-¤----¤		
- 2	25-35026- 3	. FITTING, CANOPY RETAINING MALE	2	
		ATTACHING PARTS		
	AN4-12A	. BOLT	4	
	AN960D416	. WASHER	4	
	AN365-428	. NUT	4	
		¤----¤-¤-¤----¤		
- 3	25-35006- 7	. FAIRING ASSEMBLY, WINDSHIELD LH	1	
- 4	25-35006- 8	. FAIRING ASSEMBLY, WINDSHIELD RH	1	
		ATTACHING PARTS		
- 5	AN509-416R14	. SCREW	8	
- 6	AN509-416R12	. SCREW	22	
- 7	AN509-416R13	. SCREW	8	
- 8	AN509-416R15	. SCREW, LEFT SIDE	2	
	AN509-10R11	. SCREW, RIGHT SIDE	1	
- 9	AN509-10R11	. SCREW	6	
- 10	AN509-10R12	. SCREW	2	
		¤----¤-¤-¤----¤		
- 11	25-35006- 15	. . SEAL LH, SELECTED FROM 11M710 (MDA)	1	
- 12	25-35006- 16	. . SEAL RH, SELECTED FROM 11M710 (MDA)	1	
- 13	25-70000- 3	. PLATE, FORWARD ARMOR, FOR FUTURE PROCUREMENT USE 25-70000-5	1	A
	25-70000- 5	. PLATE, FORWARD ARMOR, USE FOR FUTURE PROCUREMENT TO REPLACE 25-70000-3	1	
- 14	25-31133- 3	. FITTING, GUN SIGHT SUPPORT ATTACHMENT	1	
		ATTACHING PARTS		
	AN3-10A	. BOLT	2	
	AN960D10	. WASHER	2	
	AN365-1032	. NUT	2	
		¤----¤-¤-¤----¤		
- 15	25-70006- 5	. PLATE, COCKPIT FLOOR FWD LEFT SIDE ARMOR	1	B-F
- 16	25-70007- 5	. PLATE, COCKPIT FLOOR FWD RIGHT SIDE ARMOR	1	B-F
- 17	25-31364- 1	. DOOR ASSY, RADAR COMPUTER BAY ACCESS, SEE FIG. 50	1	
		ATTACHING PARTS		
- 18	AN393-29	. PIN, FLAT HEAD	3	
	AN960D10	. WASHER	3	
	AN381-2-7	. PIN, COTTER	3	
		¤----¤-¤-¤----¤		
- 19	25-31224- 3	. STOP, NOSE GEAR DOOR FWD	2	
		ATTACHING PARTS		
	AN3-11A	. BOLT	4	
	AN960D10L	. WASHER	4	
	AN960D10	. WASHER	8	
	AN365-1032	. NUT	4	
		¤----¤-¤-¤----¤		
- 20	25-31210- 1	. FITTING ASSY, NOSE GEAR SHRINK LINK	1	
- 21	EB080	. . NUT (EN)	2	
- 22	NAS143-8	. . WASHER	2	
- 23	25-31173- 3	. . FITTING, NOSE GEAR SHRINK LINK ADJUSTING	2	
- 24	4M36-05010	. . WASHER (MDA)	12	
- 25	4M36-05009	. . WASHER (MDA)	6	
- 26	25-31146- 3	. . FITTING, NOSE GEAR SHRINK LINK ATTACHMENT LH	1	
	25-31146- 4	. . FITTING, NOSE GEAR SHRINK LINK ATTACHMENT RH	1	
- 27	25-70004- 5	. PLATE, COCKPIT FLOOR AFT CENTER LEFT SIDE ARMOR	1	B-F
- 28	25-70008- 5	. PLATE, COCKPIT FLOOR AFT CENTER RIGHT SIDE ARMOR	1	B-F
- 29	25-31085- 1	. BOX ASSY, CONTROL STICK BASE	1	
		ATTACHING PARTS		
	AN3-5A	. BOLT, UPPER FWD	2	
	AN960D10	. WASHER	4	
	AN3-4A	. BOLT	10	
	AN960D10	. WASHER	10	

FIGURE & INDEX NUMBER	PART NUMBER	1 2 3 4 5 6 7 DESCRIPTION	UNITS PER ASS'Y	USABLE ON CODE
45 -		ATTACHING PARTS (CONT)		
	AN3-4A	• BOLT, LOWER CENTER	4	
	AN960D10L	• WASHER	4	
	AN3-5A	• BOLT, LOWER AFT	2	
	AN960D10	• WASHER	4	
		¤----¤-¤-¤----¤		
- 30	25-31085- 5	• • COVER	1	
		ATTACHING PARTS		
	NAS229-7	• • SCREW	8	
	AN960D10	• • WASHER	8	
		¤----¤-¤-¤----¤		
	25-31030- 1	• TUBE ASSEMBLY, CANTED FUSELAGE STATION 111.00	1	
- 31	25-31063- 3	• • FITTING, TUBE END	2	
- 32	25-60073- 3	• • SUPPORT, MAIN INSTRUMENT PANEL LOWER CROSS TIE	2	
	52-028-125-1375	• • PIN, ROLL (EN)	2	
	25-31084- 3	• • TUBE, CANTED FUSELAGE STATION 111.00	1	
- 33	25-70005- 7	• PLATE, COCKPIT FLOOR AFT LEFT SIDE ARMOR	1	B-F
- 34	25-70005- 9	• PLATE, COCKPIT FLOOR AFT RIGHT SIDE ARMOR	1	B-F
	25-31035- 1	• FLOOR ASSY, COCKPIT AFT CENTER	1	A
	25-31035-301	• FLOOR ASSY, COCKPIT AFT CENTER	1	B-C
	25-31035-303	• FLOOR ASSY, COCKPIT AFT CENTER	1	D-F
- 35	25-82083- 3	• • FITTING, EJECTION SEAT TRACK LOWER	2	
		ATTACHING PARTS		
	AN3-11A	• • BOLT	8	
	AN960D10	• • WASHER	16	
	AN365-1032	• • NUT	8	
		¤----¤-¤-¤----¤		
	25-82053- 3	• • SHIM, EJECTION SEAT SUPPORT INSTALLATION	2	
- 36	15-83122	• • FITTING, AIR INLET GROUND PRESS. TEST	1	
- 37	25-31202- 3	• FITTING, CANTED BULKHEAD FWD SPLICE	2	
- 38	25-31228- 3	• FITTING, CANTED BULKHEAD AFT SPLICE	2	
	25-31037- 1	• FLOOR ASSY, EQUIPMENT COMPARTMENT FWD	1	
- 39	25-61027- 1	• • SUPPORT ASSY, ELEVATOR CONTROL BELL CRANK	1	
	25-31086- 1	• DECK ASSY, CANOPY	1	
- 40	25-31256- 3	• • FITTING, SEAT TRACK DECK UPPER	2	
- 41	25-31166- 3	• • BLOCK, AFT SEAL RADIUS INNER LH	1	
- 42	25-31166- 4	• • BLOCK, AFT SEAL RADIUS INNER RH	1	
- 43	25-31086- 47	• • COVER	1	
		ATTACHING PARTS		
	AN3-4A	• • BOLT	17	
		¤----¤-¤-¤----¤		
- 44	25-31086- 63	• • BRACKET	1	
- 45	25-31223- 3	• • RETAINER, AFT LOWER CANOPY	2	
- 46	25-31087- 1	• • SUPPORT ASSY, CANOPY ACTUATOR	1	
- 47	25-35018- 3	• • • HOOK, CANOPY STOP JETTISON	1	
		ATTACHING PARTS		
- 48	AN393-33	• • • PIN, FLAT HEAD	1	
	AN960D10L	• • • WASHER	1	
	AN960D10	• • • WASHER	1	
	AN380-2-2	• • • PIN, COTTER	1	
		¤----¤-¤-¤----¤		
- 49	15-35401- 3	• • • PIN, CANOPY STOP JETTISON CAM	2	
- 50	15-35402- 3	• • • SPRING, CANOPY STOP JETTISON CAM PIN COMPRESSION	2	
	23-35079- 1	• • • LEVER ASSY, CANOPY CAM DISENGAGE	2	
- 51	23-35078- 3	• • • • PIN, CANOPY ACTUATOR DISENGAGE LEVER	1	
- 52	23-35079- 3	• • • • LEVER	1	
- 53	NAS42DD3-16A	• • • SPACER	2	
- 54	4M36-01018	• • • WASHER (MDA)	2	
- 55	SF111-11SA12A	• • • STUD (ROSN)	4	
	RL28SB8	• • • RING, LOCK (ROSN)	4	
- 56	25-31334- 3	• CHANNEL, SPLICE	1	
- 57	25-31059- 1	• DOOR ASSY, EQUIPMENT COMPARTMENT ACCESS, SEE FIG. 50	1	A1-A7
	25-31059-301	• DOOR ASSY, EQUIPMENT COMPARTMENT ACCESS, SEE FIG. 50	1	A8-F
	25-31167- 1	• BULKHEAD ASSY, FUS STA 195.39	1	A
	25-31167-301	• BULKHEAD ASSY, FUS STA 195.39	1	B-F
	NAS428-5-40	• • BOLT, AMMUNITION ELEVATOR STOP	1	
	AN315-5R	• • NUT	2	
- 58	25-31234- 3	• • FITTING, ELEVATOR SUPPORT LEFT SIDE	1	
- 59	25-31234- 5	• • FITTING, ELEVATOR SUPPORT RIGHT SIDE	1	
- 60	9M79-60B2225	• • STRIP, SEALING (MDA)	1	

FIGURE & INDEX NUMBER	PART NUMBER	1 2 3 4 5 6 7 DESCRIPTION	UNITS PER ASS'Y	USABLE ON CODE
45 - 61	25-31003- 1	• PANEL ASSY, FORWARD FUSELAGE LEFT SIDE, SEE FIG. 46	1	A
	25-31003-301	• PANEL ASSY, FORWARD FUSELAGE LEFT SIDE, SEE FIG. 46	1	B-C
	25-31003-303	• PANEL ASSY, FORWARD FUSELAGE LEFT SIDE, SEE FIG. 46	1	D-F
- 62	25-31004- 1	• PANEL ASSY, FORWARD FUSELAGE RIGHT SIDE, SEE FIG. 47	1	A
	25-31004-301	• PANEL ASSY, FORWARD FUSELAGE RIGHT SIDE, SEE FIG. 47	1	B-C
	25-31004-303	• PANEL ASSY, FORWARD FUSELAGE RIGHT SIDE, SEE FIG. 47	1	D-F

Forward Fuselage

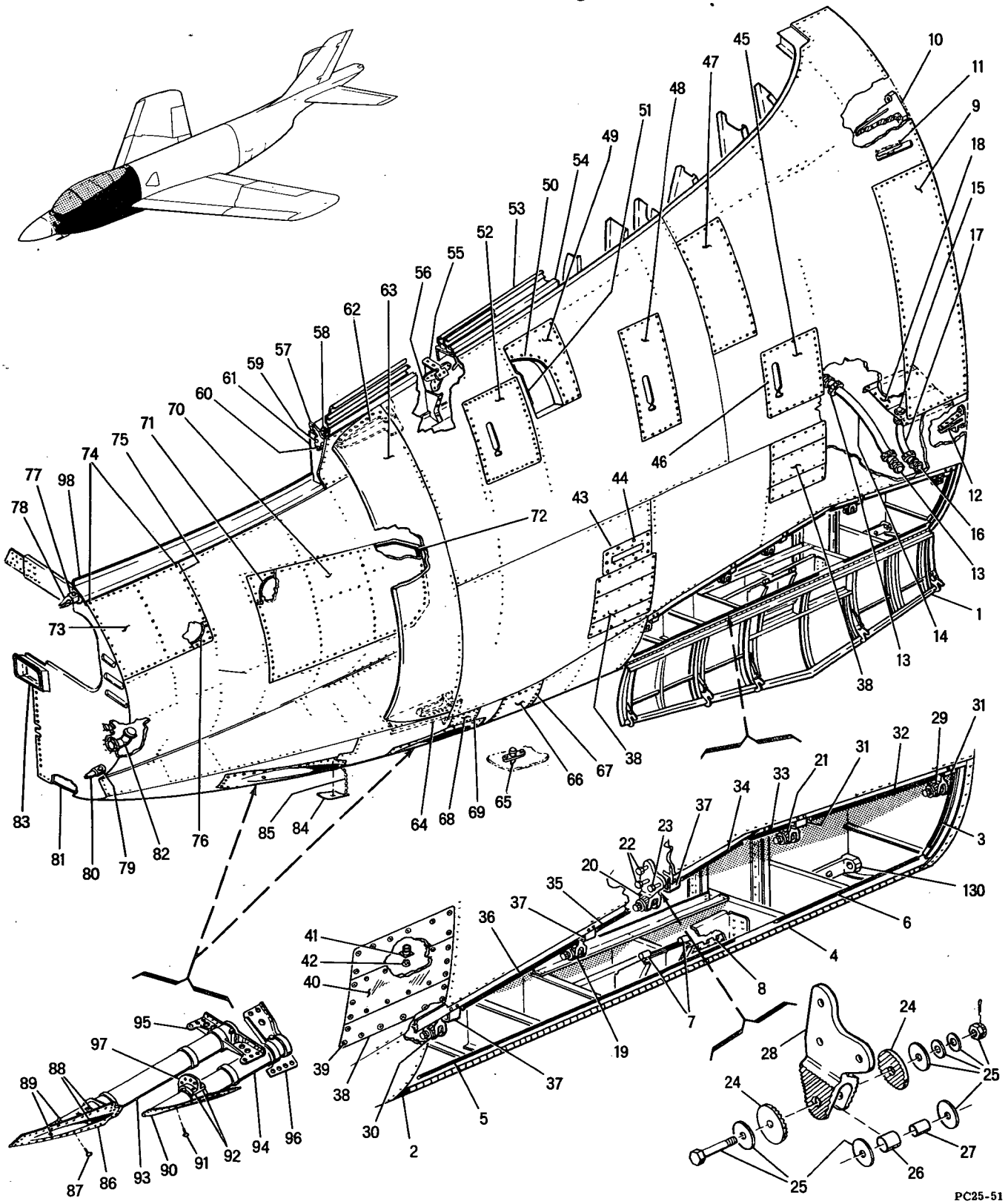

Figure 46 -- Forward Fuselage Left Side Panel Assembly (Sheet 1 of 2)

FIGURE & INDEX NUMBER	PART NUMBER	1 2 3 4 5 6 7 DESCRIPTION	UNITS PER ASS'Y	USABLE ON CODE
46 -	25-31003- 1	PANEL ASSY, FORWARD FUSELAGE LEFT SIDE, SEE FIG. 45-61 FOR NEXT HIGHER ASSY	REF	A
	25-31003-301	PANEL ASSY, FORWARD FUSELAGE LEFT SIDE, SEE FIG. 45-61 FOR NEXT HIGHER ASSY	REF	B-C
	25-31003-303	PANEL ASSY, FORWARD FUSELAGE LEFT SIDE, SEE FIG. 45-61 FOR NEXT HIGHER ASSY	REF	D-F
- 1	25-31056- 1	. DOOR ASSY, GUN COMPARTMENT LH, SEE FIG. 48	1	
		ATTACHING PARTS		
	AN253-2-5870	. PIN, HINGE	1	
		¤----¤-¤-¤----¤		
- 2	25-31243- 3	. STOP, ARMAMENT DOOR HINGE PIN LH	1	
		ATTACHING PARTS		
	AN509-10R12	. SCREW	1	
		¤----¤-¤-¤----¤		
	25-31023- 1	. FRAME ASSY, FUSELAGE STATION 232.40	1	A-C
	25-31023-303	. FRAME ASSY, FUSELAGE STATION 232.40	1	D-F
- 3	25-31023- 41	. . SEAL, SELECTED FROM 9M55B (MDA)	1	A-C
	25-31023- 55	. . SEAL, SELECTED FROM 11M601 (MDA)	1	D-F
	25-31175- 1	. BEAM ASSY, LOWER GUN SUPPORT LH	1	
- 4	25-31057- 3	. . HINGE, GUN COMPARTMENT DOOR LOWER LH, ALTERED FROM 9M82H2AX5820 (MDA)	1	
- 5	25-31175- 97	. . SEAL, SELECTED FROM 11M807 (MDA)	1	
- 6	25-31175- 95	. . SEAL, SELECTED FROM 11M807 (MDA)	1	
- 7	25-31327- 3	. . HINGE, UPPER LINK CHUTE LOWER, ALTERED FROM GOVT STANDARD PART NO. AN257YC5-449	1	
- 8	25-31175- 77	. . HINGE, LOWER LINK CHUTE, ALTERED FROM GOVT STANDARD PART NO. AN257YC3-400C	1	
- 9	25-31125- 3	. PANEL, FUSELAGE STATION 232.40 BOLT ACCESS LH	1	
		ATTACHING PARTS		
	AN509-10R10	. SCREW	74	
		¤----¤-¤-¤----¤		
- 10	25-31042- 3	. FITTING, UPPER LONGERON AFT LH	1	
	25-31117- 3	. BUSHING, UPPER LONGERON FITTING, AFT	1	
	25-31117- 7	. BUSHING, UPPER LONGERON FITTING, FWD	1	
- 11	25-31269- 5	. SPRING, CANOPY EMERGENCY HANDLE	1	
		ATTACHING PARTS		
	AN515-6R20	. SCREW	2	
	AN960D6	. WASHER	2	
	NAS43DD1-45	. SPACER	2	
		¤----¤-¤-¤----¤		
- 12	25-31231- 3	. FITTING, GUN CARRY THRU STRUCTURAL ATTACH LH	1	
	29-76101- 1	. CONDUIT INSTL, FORWARD FUSELAGE LH	1	
- 13	AN3061-20	. . COUPLING	2	
	AN3054-20	. . NUT, USE WITH INDEX 13	2	
	AN3066-20	. . NUT, USE WITH INDEX 13	2	
	AN3053-20	. . FERRULE, USE WITH INDEX 13	2	
	25-76102- 5	. . LINER, POLYETHYLENE CONDUIT, USE WITH INDEX 13	2	
- 14	25-76101- 7	. . CONDUIT	1	
- 15	AN3064-16	. . CONNECTOR	1	
	AN3054-16	. . NUT, USE WITH INDEX 15	1	
	AN3066-16	. . NUT, USE WITH INDEX 15	1	
	AN3053-16	. . FERRULE, USE WITH INDEX 15	1	
	25-76102- 3	. . LINER, POLYETHYLENE CONDUIT, USE WITH INDEX 15	1	
- 16	AN3061-16	. . COUPLING	1	
	AN3054-16	. . NUT, USE WITH INDEX 16	1	
	AN3066-16	. . NUT, USE WITH INDEX 16	1	
	AN3053-16	. . FERRULE, USE WITH INDEX 16	1	
	25-76102- 3	. . LINER, POLYETHYLENE CONDUIT, USE WITH INDEX 16	1	
- 17	25-76101- 3	. . CONDUIT LH	1	
	25-31301- 1	. SUPPORT ASSY, FUME SEAL LH	1	
- 18	25-31301- 3	. . DOOR LH	1	
		ATTACHING PARTS		
	AN3-4A	. . BOLT, INBOARD	3	
	AN960D10L	. . WASHER	9	
	AN3-4A	. . BOLT, FORWARD	6	
	AN960D10L	. . WASHER	12	
	AN3-5A	. . BOLT, AFT & FORWARD OUTBOARD	4	
	AN960D10L	. . WASHER	12	
		¤----¤-¤-¤----¤		
- 19	25-31359- 2	. BRACKET ASSY, GUN COMPARTMENT DOOR LATCH FUS STA 189.60	1	
- 20	25-31058- 1	. BRACKET ASSY, GUN COMPARTMENT DOOR LATCH FUS STA 197.85	1	

FIGURE & INDEX NUMBER	PART NUMBER	1 2 3 4 5 6 7 DESCRIPTION	UNITS PER ASS'Y	USABLE ON CODE
46 - 21	25-31058- 2	• BRACKET ASSY, GUN COMPARTMENT DOOR LATCH FUS STA 214.35	1	
		ATTACHING PARTS		
- 22	AN4-7A	• BOLT, FUS STATION 189.60 & 197.85	4	
	AN960D416	• WASHER	8	
	AN960D416L	• WASHER	4	
	AN365-428	• NUT	4	
- 23	AN4-7A	• BOLT, OUTBD, FUS STATION 189.60 & 197.85	2	
	AN960D416	• WASHER	6	
	AN960D416L	• WASHER	2	
	AN365-428	• NUT	2	
	AN4-6A	• BOLT, FUS STA 214.35	3	
	AN960D416L	• WASHER	3	
	AN960D416	• WASHER	6	
	AN365-428	• NUT	3	
		¤----¤-¤-¤----¤		
- 24	25-31354- 3	• • PLATE, GUN COMPARTMENT DOOR LATCH PIN	2	
		ATTACHING PARTS		
- 25	AN4-14	• • BOLT	1	
	4M36-02001	• • WASHER (MDA)	4	
	AN960D416	• • WASHER	2	
	AN310-4	• • NUT	1	
	AN380-2-2	• • PIN, COTTER	1	
		¤----¤-¤-¤----¤		
- 26	25-31356- 3	• • SPACER, GUN COMPARTMENT DOOR LATCH	1	
- 27	25-31355- 3	• • BUSHING, GUN COMPARTMENT DOOR LATCH	1	
- 28	25-31359- 4	• • BRACKET, FUS STATION 189.60, LEFT SIDE	1	
	25-31058- 5	• • BRACKET, FUS STATION 197.85, LEFT SIDE	1	
	25-31058- 6	• • BRACKET, FUS STATION 214.35, LEFT SIDE	1	
	25-31296- 1	• CHANNEL ASSY, SIDE PANEL STIFFENER LH	1	
- 29	25-31358- 2	• • BRACKET ASSY, GUN COMPT DOOR LATCH, FUS STA 232.4, LEFT SIDE	1	
	25-31354- 3	• • • PLATE, GUN COMPARTMENT DOOR LATCH PIN	2	
		ATTACHING PARTS		
	AN4-14	• • • BOLT	1	
	4M36-02001	• • • WASHER (MDA)	4	
	AN960D416	• • • WASHER	2	
	AN310-4	• • • NUT	1	
	AN380-2-2	• • • PIN, COTTER	1	
		¤----¤-¤-¤----¤		
	25-31356- 3	• • • SPACER, GUN COMPARTMENT DOOR LATCH	1	
	25-31355- 3	• • • BUSHING, GUN COMPARTMENT DOOR LATCH	1	
	25-31198- 1	• BRACKET ASSY, GUN COMPARTMENT DOOR LATCH LH	1	A
	25-31198-301	• BRACKET ASSY, GUN COMPARTMENT DOOR LATCH LH	1	B-F
- 30	25-31357- 2	• • BRACKET ASSY, GUN COMPT DOOR LATCH, FUS STA 173.1, LEFT SIDE	1	
	25-31354- 3	• • • PLATE, GUN COMPARTMENT DOOR LATCH PIN	2	
		ATTACHING PARTS		
	AN4-14	• • • BOLT	1	
	4M36-02001	• • • WASHER (MDA)	4	
	AN960D416	• • • WASHER	2	
	AN310-4	• • • NUT	1	
	AN380-2-2	• • • PIN, COTTER	1	
		¤----¤-¤-¤----¤		
	25-31356- 3	• • • SPACER, GUN COMPARTMENT DOOR LATCH	1	
	25-31355- 3	• • • BUSHING, GUN COMPARTMENT DOOR LATCH	1	
	25-31268- 1	• SILL ASSY, ARMAMENT ACCESS DOOR LH	1	
- 31	25-31294- 7	• • BUMPER, ARMAMENT ACCESS DOOR ADJUSTING	2	
		ATTACHING PARTS		
	AN509-10R11	• • SCREW	4	
	AN960D3	• • WASHER	4	
	AN365-1032	• • NUT	4	
		¤----¤-¤-¤----¤		
	25-31295- 3	• • PLATE, ARMAMENT ACCESS DOOR ADJUSTING, USE WITH INDEX 31	2	
- 32	25-31268- 25	• • SEAL, SELECTED FROM 9M55B (MDA)	1	
- 33	25-31268- 19	• • SEAL, SELECTED FROM 9M55B (MDA)	1	
	25-31144- 1	• LONGERON ASSY, UPPER GUN LH	1	
- 34	25-31144- 27	• • SEAL, LH, SELECTED FROM 9M55B (MDA)	1	
- 35	25-31144- 25	• • SEAL, LH, SELECTED FROM 9M55B (MDA)	1	
- 36	25-31144- 23	• • SEAL, LH, SELECTED FROM 9M55B (MDA)	1	
- 37	25-31294- 7	• • BUMPER, ARMAMENT ACCESS DOOR ADJUSTING	3	
		ATTACHING PARTS		
	AN509-10R10	• • SCREW	6	
	AN960D10L	• • WASHER	6	
	AN364-1032	• • NUT	6	
		¤----¤-¤-¤----¤		

FIGURE & INDEX NUMBER	PART NUMBER	1 2 3 4 5 6 7 DESCRIPTION	UNITS PER ASS'Y	USABLE ON CODE
46 -	25-31295- 3	• • PLATE, ARMAMENT ACCESS DOOR ADJUSTING, USE WITH INDEX 37	1	
- 38	25-87006- 1	• ANTENNA ASSY, 1000 MC FLUSH	2	A
		ATTACHING PARTS		
- 39	AN509-10R11	• SCREW, FWD ANTENNA	22	
	AN509-10R10	• SCREW, AFT ANTENNA	22	
		¤----¤-¤-¤----¤		
- 40	25-87006- 11	• • WINDOW	1	A
		ATTACHING PARTS		
	AN509-10R8	• • SCREW	8	
		¤----¤-¤-¤----¤		
- 41	UG496/U	• • RECEPTACLE	1	A
		ATTACHING PARTS		
	AN515-4R14	• • SCREW	4	
	25-87082- 3	• • SPACER, 1000 MC FLUSH ANTENNA	1	A
	AN960D4	• • WASHER	4	
	AN365-440	• • NUT	4	
		¤----¤-¤-¤----¤		
- 42	25-87076- 3	• • CONNECTOR, 1000 MC FLUSH ANTENNA FEED	1	A
- 43	25-31217- 1	• DOOR ASSY, FORMATION LIGHT LH, SEE FIG. 49	1	A-B
	25-31217-301	• DOOR ASSY, FORMATION LIGHT LH, SEE FIG. 49	1	C-F
		ATTACHING PARTS		
- 44	AN509-10R11	• SCREW	10	
		¤----¤-¤-¤----¤		
- 45	25-31128- 1	• COVER ASSY, AFT COCKPIT ACCESS STEP	1	
		ATTACHING PARTS		
- 46	AN509-10R9	• SCREW	32	
		¤----¤-¤-¤----¤		
- 47	25-31170- 1	• COVER ASSY, COCKPIT STEP MECHANISM ACCESS	1	
		ATTACHING PARTS		
	AN509-10R10	• SCREW	37	
		¤----¤-¤-¤----¤		
- 48	25-31127- 1	• COVER ASSY, CENTER COCKPIT STEP	1	
		ATTACHING PARTS		
	AN509-10R10	• SCREW	38	
		¤----¤-¤-¤----¤		
- 49	25-31196- 3	• COVER, GUN AIR VENT LH	1	
		ATTACHING PARTS		
	AN509-10R11	• SCREW	30	
		¤----¤-¤-¤----¤		
	25-31197- 1	• SUPPORT ASSY, GUN AIR SCOOP LH	1	
- 50	25-31197- 5	• • SEAL, SELECTED FROM 11M603 (MDA)	1	
	25-31014- 1	• FRAME ASSY, FUSELAGE STATION 155.68 LH	1	A
	25-31014-301	• FRAME ASSY, FUSELAGE STATION 155.68 LH	1	B-F
- 51	25-31014-105	• • SEAL, SELECTED FROM 11M603 (MDA)	1	
- 52	25-31126- 1	• COVER ASSY, FORWARD COCKPIT STEP	1	
		ATTACHING PARTS		
	AN509-10R11	• SCREW	47	
		¤----¤-¤-¤----¤		
- 53	25-31119- 5	• TRACK, CANOPY ROLLER LH	1	
- 54	25-31120- 3	• RETAINER, CANOPY SIDE LH	1	
	25-31012- 1	• FRAME ASSY, FUS STA 145.68 LH	1	
- 55	25-31137- 3	• • FITTING, FUS STA 145.68 CANOPY SILL LH, FOR FUTURE PROCUREMENT USE 25-31137-5	1	A-C
	25-31137- 5	• • FITTING, FUS STA 145.68 CANOPY SILL LH, USE FOR FUTURE PROCUREMENT TO REPLACE 25-31137-3	1	
- 56	25-31067- 3	• • FITTING, FUS STA 145.68 FRAME LH	1	
- 57	25-31044- 3	• FITTING, WINDSHIELD ATTACH LH	1	
		ATTACHING PARTS		
- 58	NAS229-17	• SCREW	1	
	AN960D10	• WASHER	1	
	AN365-1032	• NUT	1	
- 59	AN4-11A	• BOLT, SEE FIG. 51-17	REF	
	AN960D416	• WASHER	REF	
	AN365-428	• NUT	REF	
- 60	AN3-7A	• BOLT, SEE FIG. 51-18	REF	
	AN960D10	• WASHER	REF	
	AN960D10L	• WASHER	REF	
	AN365-1032	• NUT	REF	
		¤----¤-¤-¤----¤		

Forward Fuselage

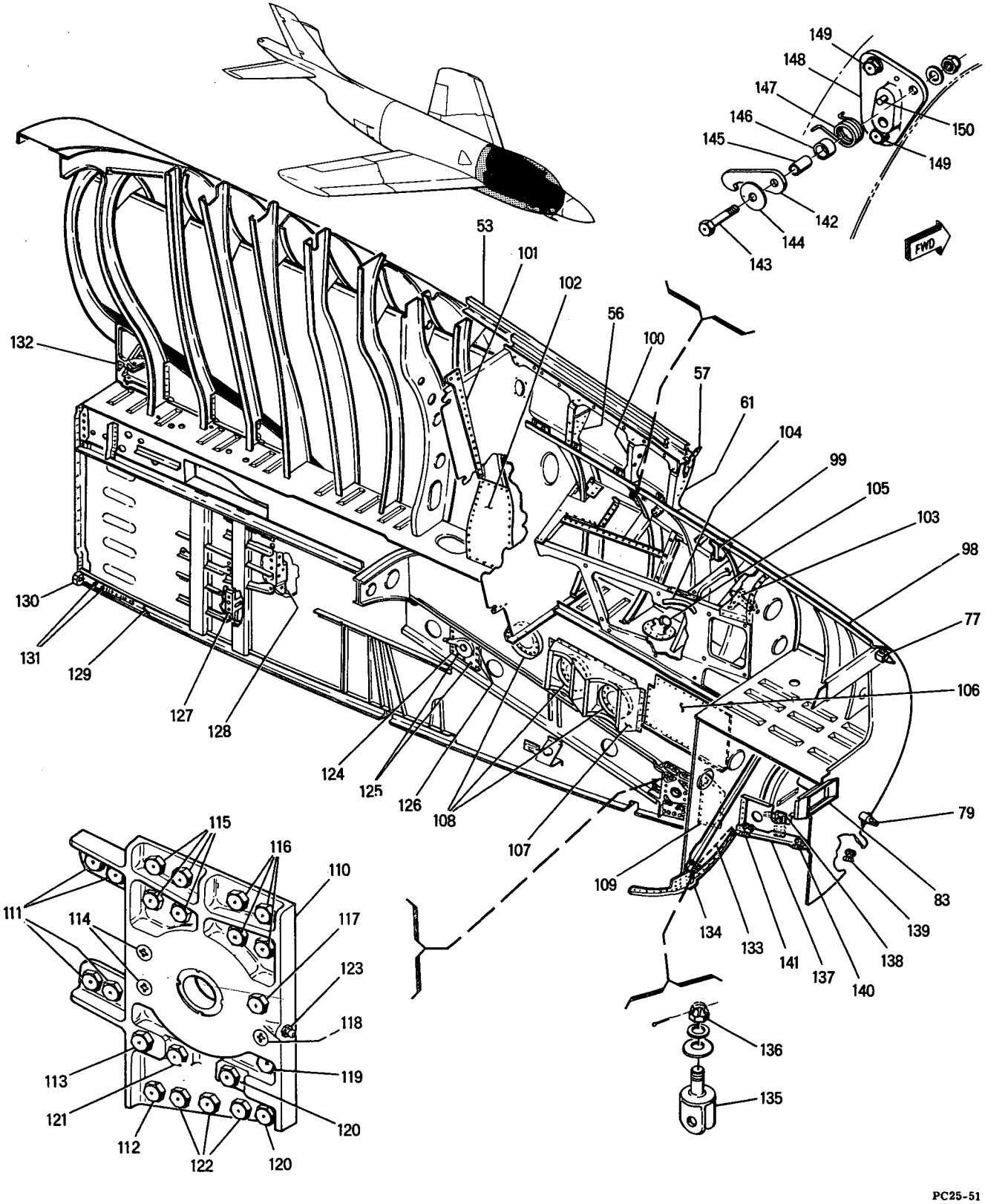

Figure 46 -- Forward Fuselage Left Side Panel Assembly (Sheet 2 of 2)

FIGURE & INDEX NUMBER	PART NUMBER	1 2 3 4 5 6 7 DESCRIPTION	UNITS PER ASS'Y	USABLE ON CODE
46 - 61	25-31065- 1	• FITTING ASSY, FUS STA 129.06 FRAME LH	1	
	25-31046- 1	• FITTING ASSY, ENGINE AIR DUCT UPPER LH	1	
- 62	25-31046- 3	• • FITTING LH	1	
- 63	25-31045- 3	• LIP, ENGINE AIR DUCT LH	1	
	25-31047- 1	• FITTING ASSY, ENGINE AIR DUCT LOWER LH	1	
- 64	25-31047- 3	• • FITTING LH	1	
- 65	25-76096- 3	• FITTING, BATTERY VENT	1	
		ATTACHING PARTS		
	AN509-10R13	• SCREW	2	
	AN960D10	∘ WASHER	2	
	AN365-1032	• NUT	2	
		¤----¤-¤-¤----¤		
- 66	25-31209- 1	• DOOR ASSY, LOWER GUN FWD MOUNT ACCESS LH	1	
		ATTACHING PARTS		
- 67	AN509-10R11	• SCREW	24	
		¤----¤-¤-¤----¤		
	25-32214- 1	• • CHAIN ASSEMBLY, NOSE GEAR TRUNNION BOLT ACCESS COVER	1	
	NAF1088-1A4	• • • CHAIN	1	
	RS109	• • • SWIVEL (RYY)	1	
	RS102	• • • LINK (RYY)	1	
- 68	25-31208- 3	• DOOR, UPPER GUN FWD MOUNT ACCESS LH	1	
		ATTACHING PARTS		
- 69	AN509-10R12	• SCREW	17	
		¤----¤-¤-¤----¤		
	25-31064- 1	• PANEL ASSY, CONSOLE ACCESS LH	1	A
	25-31095- 1	• PANEL ASSY, CONSOLE ACCESS LH	1	B-F
- 70	25-31064- 3	• • DOOR LH	1	A
	25-31095- 3	• • DOOR LH	1	B-F
		ATTACHING PARTS		
	AN509-10R11	• • SCREW	104	
		¤----¤-¤-¤----¤		
	25-31088- 1	• DOUBLER ASSEMBLY, CONSOLE ACCESS PANEL	1	B-F
- 71	25-31088- 9	• • SEAL, SELECTED FROM 9M7102A (MDA)	1	B-F
- 72	25-31088- 11	• • SEAL, SELECTED FROM 9M7102A (MDA)	1	B-F
- 73	25-31183- 3	• DOOR, RUDDER PEDAL ACCESS LH	1	A
	25-31183- 5	• DOOR, RUDDER PEDAL ACCESS LH	1	B-F
		ATTACHING PARTS		
- 74	AN509-10R13	• SCREW	14	
- 75	AN509-10R9	• SCREW	41	A
	AN509-10R11	• SCREW	41	B-F
		¤----¤-¤-¤----¤		
	25-31079- 1	• DOUBLER ASSEMBLY, RUDDER PEDAL ACCESS DOOR	1	B-F
- 76	25-31079- 5	• • SEAL, SELECTED FROM 9M7102A (MDA)	1	B-F
- 77	25-31038- 1	• FITTING ASSY, REMOVABLE NOSE SUPPORT UPPER LH, FOR FUTURE PROCUREMENT USE 25-31038-301	1	A
	25-31038-301	• FITTING ASSY, REMOVABLE NOSE SUPPORT UPPER LH, USE FOR FUTURE PROCUREMENT TO REPLACE 25-31038-1	1	A-B
	25-31038-303	• FITTING ASSY, REMOVABLE NOSE SUPPORT UPPER LH	1	C-F
- 78	25-31103- 3	• • PIN, REMOVABLE NOSE SUPPORT FITTING LH	1	25-31038-1
	25-31103- 7	• • PIN, REMOVABLE NOSE SUPPORT FITTING LH	1	25-31038-301 & -303
- 79	25-31040- 1	• FITTING ASSY, REMOVABLE NOSE SUPPORT LOWER LH, FOR FUTURE PROCUREMENT USE 25-31040-301	1	A
	25-31040-301	• FITTING ASSY, REMOVABLE NOSE SUPPORT LOWER LH, USE FOR FUTURE PROCUREMENT TO REPLACE 25-31040-1	1	A-B
	25-31040-303	• FITTING ASSY, REMOVABLE NOSE SUPPORT LOWER LH	1	C-F
- 80	25-31103- 4	• • PIN, REMOVABLE NOSE SUPPORT FITTING RH	1	25-31040-1
	25-31103- 5	• • PIN, REMOVABLE NOSE SUPPORT FITTING LH	1	25-31040-301 & -303
	25-31005- 1	• BULKHEAD ASSY, CANTED FUS STA 88.00 LH	1	A
	25-31005-301	• BULKHEAD ASSY, CANTED FUS STA 88.00 LH	1	B
	25-31005-303	• BULKHEAD ASSY, CANTED FUS STA 88.00 LH	1	C-F
- 81	25-31005-107	• • SEAL, SELECTED FROM 11M601 (MDA)	1	
- 82	25-83104- 3	• • FITTING, COCKPIT EMERGENCY AIR	1	
- 83	25-31005-209	• • SEAL, SELECTED FROM 11M600 (MDA)	1	
- 84	25-31203- 1	• COVER ASSY, NOSE GEAR TRUNNION BOLT ACCESS LH	1	
		ATTACHING PARTS		
	AN509-10R13	• SCREW	12	
		¤----¤-¤-¤----¤		
- 85	25-32214- 1	• • CHAIN ASSEMBLY, NOSE GEAR TRUNNION BOLT ACCESS COVER	1	
	NAF1088-1A4	• • • CHAIN	1	
	RS109	• • • SWIVEL (RYY)	1	
	RS102	• • ∘ LINK (RYY)	1	

FIGURE & INDEX NUMBER	PART NUMBER	1 2 3 4 5 6 7 DESCRIPTION	UNITS PER ASS'Y	USABLE ON CODE
46 - 86	25-71090- 7	• PORT, UPPER BLAST LH	1	
		ATTACHING PARTS		
- 87	AN509-10R12	• SCREW, OUTBD	35	
- 88	AN509C416-14	• SCREW, AFT INBD	2	
- 89	AN509C416-16	• SCREW, FORWARD INBD	2	
		¤----¤-¤-¤----¤		
- 90	25-71091- 5	• PORT, LOWER BLAST LH	1	
		ATTACHING PARTS		
- 91	AN509-10R12	• SCREW, OUTBD	18	
- 92	AN509-10R15	• SCREW, INBD	4	
		¤----¤-¤-¤----¤		
- 93	25-71045-301	• TUBE ASSY, UPPER BLAST	1	
- 94	25-71046- 1	• TUBE ASSY, LOWER BLAST	1	
- 95	25-31080- 3	• FITTING, UPPER GUN FWD MOUNT LH	1	
- 96	25-31081- 3	• FITTING, LOWER GUN FWD MOUNT LH	1	
	25-31011- 5	• FRAME ASSY, CANTED FUS STA 138.43 LOWER LH	1	
- 97	25-31089- 1	• • SUPPORT ASSY, LOWER BLAST PORT LH	1	
- 98	25-31028- 1	• LONGERON ASSEMBLY, WINDSHIELD SILL LH	1	
	25-31009- 3	• FRAME ASSY, CANTED FUS STA 120.50	1	A
	25-31009-301	• FRAME ASSY, CANTED FUS STA 120.50	1	B-F
- 99	25-31139- 1	• • FITTING ASSY, THROTTLE CATAPULT HOLDBACK	1	A-B
	25-31139-301	• • FITTING ASSY, THROTTLE CATAPULT HOLDBACK	1	C-F
	25-31204- 3	• • • SPRING, CATAPULT THROTTLE HOLDBACK	1	A-B
-100	25-31066- 3	• FITTING, FUS STA 138.43 FRAME LH	1	
	25-31013- 1	• BULKHEAD ASSY, FUS STA 145.68 CANTED LH	1	A
	25-31013-301	• BULKHEAD ASSY, FUS STA 145.68 CANTED LH	1	B-F
-101	25-31281- 3	• • FITTING, EJECTION SEAT UPPER SUPPORT LH	1	A
	25-31281- 5	• • FITTING, EJECTION SEAT UPPER SUPPORT LH	1	B-F
-102	25-31200- 3	• COVER, ELECTRICAL PLUG BOX	1	A
	25-31200- 1	• COVER ASSY, ELECTRICAL PLUG BOX	1	B-F
		ATTACHING PARTS		
	AN3-5A	• BOLT	32	A
	AN960D10	• WASHER	32	A
	NAS229-10	• SCREW	28	B-F
		¤----¤-¤-¤----¤		
	25-31070- 1	• CONSOLE ASSY, STRUCTURAL	1	A
	25-31070-301	• CONSOLE ASSY, STRUCTURAL	1	B
	25-31070-303	• CONSOLE ASSY, STRUCTURAL	1	C-F
	25-31165- 1	• • SUPPORT ASSY, SUB INSTRUMENT STRUCTURAL	1	
-103	25-55057- 1	• • • FITTING ASSY, EXTERNAL STORES RELEASE	1	
	79-040-187-0688	• • • • PIN, ROLL (EN)	1	
-104	25-54071- 3	• • RATCHET, POWER QUADRANT FRICTION LOCK	1	
	25-31034- 1	• FLOOR ASSY, COCKPIT AFT	1	
-105	25-83094- 1	• • FITTING ASSY, COCKPIT CONDITIONED AIR	1	
	1191-6CNX9/16	• • • INSERT (AF)	1	
	25-31029- 1	• WEB ASSY, BUTTOCK LINE 12.50 LH	1	
-106	25-31029-109	• • DOOR	1	
		ATTACHING PARTS		
	AN3-6A	• • BOLT	58	
	AN960D10	• • WASHER	58	
		¤----¤-¤-¤----¤		
-107	25-31184- 1	• • BRACKET ASSY, OXYGEN BOTTLE	1	
-108	25-31278- 1	• • DOOR, SHEAR WEB	3	
		ATTACHING PARTS		
	AN3-5A	• • BOLT	42	
	AN960D10L	• • WASHER	42	
		¤----¤-¤-¤----¤		
	25-32214- 1	• • • CHAIN ASSEMBLY, NOSE GEAR TRUNNION BOLT ACCESS COVER	1	
	NAF1088-1A4	• • • • CHAIN	1	
	RS109	• • • • SWIVEL (RYY)	1	
	RS102	• • • • LINK (RYY)	1	
-109	25-31029-119	• • DOOR	1	
		ATTACHING PARTS		
	AN3-5A	• • BOLT	15	
	AN960D10L	• • WASHER	15	
		¤----¤-¤-¤----¤		
-110	25-31032- 1	• • FITTING ASSY, NOSE GEAR FRONT TRUNNION	1	
		ATTACHING PARTS		
-111	AN4-7A	• • BOLT	4	
	AN960D416L	• • WASHER	4	
	AN960D416	• • WASHER	8	
	AN365-428	• • NUT	4	

FIGURE & INDEX NUMBER	PART NUMBER	1 2 3 4 5 6 7 DESCRIPTION	UNITS PER ASS'Y	USABLE ON CODE
46 -		ATTACHING PARTS (CONT)		
-112	AN4-12A	• • BOLT	1	
	AN960D416L	• • WASHER	1	
	AN960D416	• • WASHER	2	
	AN365-428	• • NUT	1	
-113	AN4-14A	• • BOLT	1	
	AN960D416	• • WASHER	3	
	AN365-428	• • NUT	1	
-114	AN509-416R21	• • SCREW	2	
	AN960D416	• • WASHER	4	
	AN365-428	• • NUT	2	
-115	AN4-10A	• • BOLT	4	
	AN960D416L	• • WASHER	4	
	AN960D416	• • WASHER	8	
	AN365-428	• • NUT	4	
-116	AN4-11A	• • BOLT	4	
	AN960D416	• • WASHER	12	
	AN365-428	• • NUT	4	
-117	AN4-14A	• • BOLT	1	
	AN960D416L	• • WASHER	1	
	AN960D416	• • WASHER	2	
	AN365-428	• • NUT	1	
-118	AN509-416R23	• • SCREW	1	
	AN960D416	• • WASHER	2	
	AN365-428	• • NUT	1	
-119	AN4-11A	• • BOLT	1	
	AN960D416L	• • WASHER	1	
	AN960D416	• • WASHER	2	
	AN365-428	• • NUT	1	
-120	AN4-11A	• • BOLT	2	
	AN960D416L	• • WASHER	2	
	AN960D416	• • WASHER	2	
	AN365-428	• • NUT	2	
-121	AN4-12A	• • BOLT	1	
	AN960D416	• • WASHER	3	
	AN365-428	• • NUT	1	
-122	AN4-10A	• • BOLT	3	
	AN960D416	• • WASHER	9	
	AN365-428	• • NUT	3	
		¤----¤-¤-¤----¤		
	HSSB18-1	• • • BEARING (HLF)	1	
-123	AN944-101	• • • FITTING, LUB	1	
-124	25-31053- 1	• • TRUNNION ASSY, NOSE LANDING GEAR DRAG BRACE LH	1	
		ATTACHING PARTS		
-125	AN4-7A	• • BOLT, UPPER & LOWER	6	
	AN960D416L	• • WASHER	6	
	AN960D416	• • WASHER	12	
	AN365-428	• • NUT	6	
-126	AN509-416R15	• • SCREW, FWD CENTER	3	
	AN960D416	• • WASHER	3	
	AN365-428	• • NUT	3	
	AN4-7A	• • BOLT	7	
	AN960D416L	• • WASHER	7	
	AN960D416	• • WASHER	7	
	AN365-428	• • NUT	7	
		¤----¤-¤-¤----¤		
	HSSB14-1	• • • BEARING (HLF)	1	
	AN944-101	• • • FITTING, LUB	1	
-127	25-31102- 3	• • FITTING, LOWER GUN REAR SUPPORT	1	
-128	25-31116- 5	• • FITTING, UPPER GUN REAR MOUNT	1	
	25-31027- 1	• • LONGERON ASSY, FWD FUSELAGE LOWER LH	1	
-129	25-31027- 3	• • • LONGERON, FWD FUSELAGE LOWER LH	1	
-130	25-31043- 3	• • FITTING, LOWER LONGERON SPLICE LH	1	
-131	25-31108- 3	• • BUSHING, LOWER LONGERON FITTING	2	
-132	25-31051- 1	• FITTING ASSY, STABILATOR & ENGINE CONTROL SUP.	1	
	25-31008- 1	• FRAME ASSY, CANTED FUSELAGE STATION 111.00 LH	1	A
	25-31008-301	• FRAME ASSY, CANTED FUSELAGE STATION 111.00 LH	1	B-F
-133	9M55-2B1050	• • STRIP, SEALING (MDA)	1	
-134	25-31008- 91	• • SEAL, SELECTED FROM 11M601 (MDA)	1	
-135	25-31351- 3	• • FITTING, COMPUTER ACCESS DOOR STRUT SUPPORT	1	
		ATTACHING PARTS		
-136	AN310C4	• • NUT	1	
	4M36-02056	• • WASHER (MDA)	1	
	AN960D416	• • WASHER	1	
	AN381-2-12	• • PIN, COTTER	1	
		¤----¤-¤-¤----¤		

FIGURE & INDEX NUMBER	PART NUMBER	1 2 3 4 5 6 7 DESCRIPTION	UNITS PER ASS'Y	USABLE ON CODE
46 -	25-31279- 1	• WEB ASSY, COMPUTER COMPARTMENT SHEAR	1	A-B
	25-31279-301	• WEB ASSY, COMPUTER COMPARTMENT SHEAR	1	C-F
-137	25-31267- 3	• • LONGERON, RADAR COMPUTER COMPARTMENT	1	A-B
	25-31267- 5	• • LONGERON, RADAR COMPUTER COMPARTMENT	1	C-F
-138	25-87089- 1	• FITTING ASSY, COMPUTER RACK LATCH	1	
	25-87101- 3	• • BUSHING, COMPUTER RACK LATCH	1	
-139	25-31297- 5	• FITTING, COMPUTER ACCESS DOOR HINGE, FWD	1	A-B7
	25-31189- 3	• FITTING, COMPUTER ACCESS DOOR HINGE, FWD	1	B8-F
-140	25-31297- 7	• FITTING, COMPUTER ACCESS DOOR HINGE, CENTER	1	A-B7
	25-31190- 3	• FITTING, COMPUTER ACCESS DOOR HINGE, CENTER	1	B8-F
-141	25-31297- 9	• FITTING, COMPUTER ACCESS DOOR HINGE, AFT	1	A-B7
	25-31383- 3	• FITTING, COMPUTER ACCESS DOOR HINGE, AFT	1	B8-F
		ATTACHING PARTS		
	AN3-7A	• BOLT	6	
	AN509-10R11	• SCREW	6	
	AN960D10	• WASHER	6	
	22FS1032	• NUT (SPS)	6	
		¤----¤-¤-¤----¤		
	25-31011- 3	• FRAME ASSY, CANTED FUS STA 138.43 UPPER LH	1	A
	25-31011-301	• FRAME ASSY, CANTED FUS STA 138.43 UPPER LH	1	B-F
-142	25-80072- 3	• • LATCH, EMERGENCY SLAT VALVE CONTROL	1	
		ATTACHING PARTS		
-143	AN3-11	• • BOLT	1	
-144	AN970-3	• • WASHER	1	
-145	NAS43-3-36	• • SPACER	1	
-146	NAS43-6-18	• • SPACER	1	
	AN960D10	• • WASHER	1	
	AN365-1032	• • NUT	1	
		¤----¤-¤-¤----¤		
-147	25-80071- 3	• • SPRING, EMERGENCY SLAT VALVE CONTROL	1	
-148	25-80063- 1	• • BRACKET ASSY, EMERGENCY SLAT VALVE CONTROL	1	
		ATTACHING PARTS		
-149	AN3-5	• • BOLT	2	
	AN960D10L	• • WASHER	2	
	AN960D10	• • WASHER	2	
	AN365-1032	• • NUT	2	
		¤----¤-¤-¤----¤		
-150	52-028-125-0500	• • • PIN, ROLL (EN)	1	

FIGURE & INDEX NUMBER	PART NUMBER	1 2 3 4 5 6 7 DESCRIPTION	UNITS PER ASS'Y	USABLE ON CODE
47 -	25-31004- 1	PANEL ASSY, FORWARD FUSELAGE, RIGHT SIDE, SEE FIG. 45-62 FOR NEXT HIGHER ASSY	REF	A
	25-31004-301	PANEL ASSY, FORWARD FUSELAGE, RIGHT SIDE, SEE FIG. 45-62 FOR NEXT HIGHER ASSY	REF	B-C
	25-31004-303	PANEL ASSY, FORWARD FUSELAGE, RIGHT SIDE, SEE FIG. 45-62 FOR NEXT HIGHER ASSY	REF	D-F
- 1	25-31056- 2	. DOOR ASSY, GUN COMPARTMENT RH, SEE FIG. 48	1	
		ATTACHING PARTS		
	AN253-2-5870	. PIN, HINGE	1	
		¤----¤-¤-¤----¤		
- 2	25-31243- 4	. STOP, ARMAMENT DOOR HINGE PIN RH	1	
		ATTACHING PARTS		
	AN509-10R12	. SCREW	1	
		¤----¤-¤-¤----¤		
	25-31175- 2	. BEAM ASSY, LOWER GUN SUPPORT RH	1	
- 3	25-31057- 4	. . HINGE, GUN COMPARTMENT DOOR LOWER RH, ALTERED FROM 9M82H2AX5820 (MDA)	1	
- 4	25-31175- 97	. . SEAL, SELECTED FROM 11M807 (MDA)	1	
- 5	25-31175- 95	. . SEAL, SELECTED FROM 11M807 (MDA)	1	
- 6	25-31327- 3	. . HINGE, UPPER LINK CHUTE LOWER, ALTERED FROM GOVT STANDARD PART NO. AN257YC5-449	1	
- 7	25-31175- 77	. . HINGE, LOWER LINK CHUTE, ALTERED FROM GOVT STANDARD PART NO. AN257YC3-400	1	
- 8	25-31125- 4	. PANEL, FUSELAGE STATION 232.40 BOLT ACCESS RH	1	A-C
	25-31125- 1	. PANEL ASSEMBLY, FUS STA 232.40 BOLT ACCESS, RIGHT SIDE ONLY	1	D-F
		ATTACHING PARTS		
	AN509-10R10	. SCREW	64	
	AN509-10R10	. SCREW	10	A-C
		¤----¤-¤-¤----¤		
- 9	25-31042- 4	. FITTING, UPPER LONGERON AFT RH	1	
	25-31117- 3	. BUSHING, UPPER LONGERON FITTING AFT	1	
	25-31117- 7	. BUSHING, UPPER LONGERON FITTING FWD	1	
- 10	25-31231- 4	. FITTING, GUN CARRY THRU STRUCTURAL ATTACH RH	1	
	25-31023- 2	. FRAME ASSY, FUSELAGE STATION 232.40	1	A-C
	25-31023-301	. FRAME ASSY, FUSELAGE STATION 232.40	1	D-F
	25-31389- 1	. . FITTING ASSY, REFUELING PROBE ATTACHMENT	1	D-F
- 11	25-31023- 42	. . SEAL, SELECTED FROM 9M55B (MDA)	1	A-C
	25-21023- 55	. . SEAL, SELECTED FROM 11M601 (MDA)	1	D-F
	25-76101- 2	. CONDUIT INSTALLATION, FORWARD FUSELAGE RH	1	
- 12	AN3061-32	. . COUPLING	2	
	AN3054-32	. . NUT, USE WITH INDEX 12	2	
	AN3066-32	. . NUT, USE WITH INDEX 12	2	
	AN3053-32	. . FERRULE, USE WITH INDEX 12	2	
	25-76102- 7	. . LINER, POLYETHYLENE CONDUIT, USE WITH INDEX 12	2	
- 13	25-76101- 5	. . CONDUIT	1	
- 14	AN3064-16	. . CONNECTOR	1	
	AN3054-16	. . NUT, USE WITH INDEX 14	1	
	AN3066-16	. . NUT, USE WITH INDEX 14	1	
	AN3053-16	. . FERRULE, USE WITH INDEX 14	1	
	25-76102- 3	. . LINER, POLYETHYLENE CONDUIT, USE WITH INDEX 14	2	
- 15	AN3061-16	. . COUPLING	1	
	AN3054-16	. . NUT, USE WITH INDEX 15	1	
	AN3066-16	. . NUT, USE WITH INDEX 15	1	
	AN3053-16	. . FERRULE, USE WITH INDEX 15	1	
	25-76102- 3	. . LINER, POLYETHYLENE CONDUIT, USE WITH INDEX 15	1	
- 16	25-76101- 4	. . CONDUIT RH	1	
	25-31301- 2	. SUPPORT ASSY, FUME SEAL RH	1	
- 17	25-31301- 4	. . DOOR RH	1	
		ATTACHING PARTS		
	AN3-4A	. . BOLT	13	
	AN960D10	. . WASHER	13	
		¤----¤-¤-¤----¤		
- 18	25-31359- 1	. BRACKET ASSY, GUN COMPARTMENT DOOR LATCH FUS STA 189.60	1	
- 19	25-31058- 1	. BRACKET ASSY, GUN COMPARTMENT DOOR LATCH FUS STA 197.85	1	
- 20	25-31058- 2	. BRACKET ASSY, GUN COMPARTMENT DOOR LATCH FUS STA 214.35	1	
		ATTACHING PARTS		
- 21	AN4-6A	. BOLT	9	
	AN960D416L	. WASHER	9	
	AN960D416	. WASHER	18	
	AN365-428	. NUT	9	
		¤----¤-¤-¤----¤		

Forward Fuselage

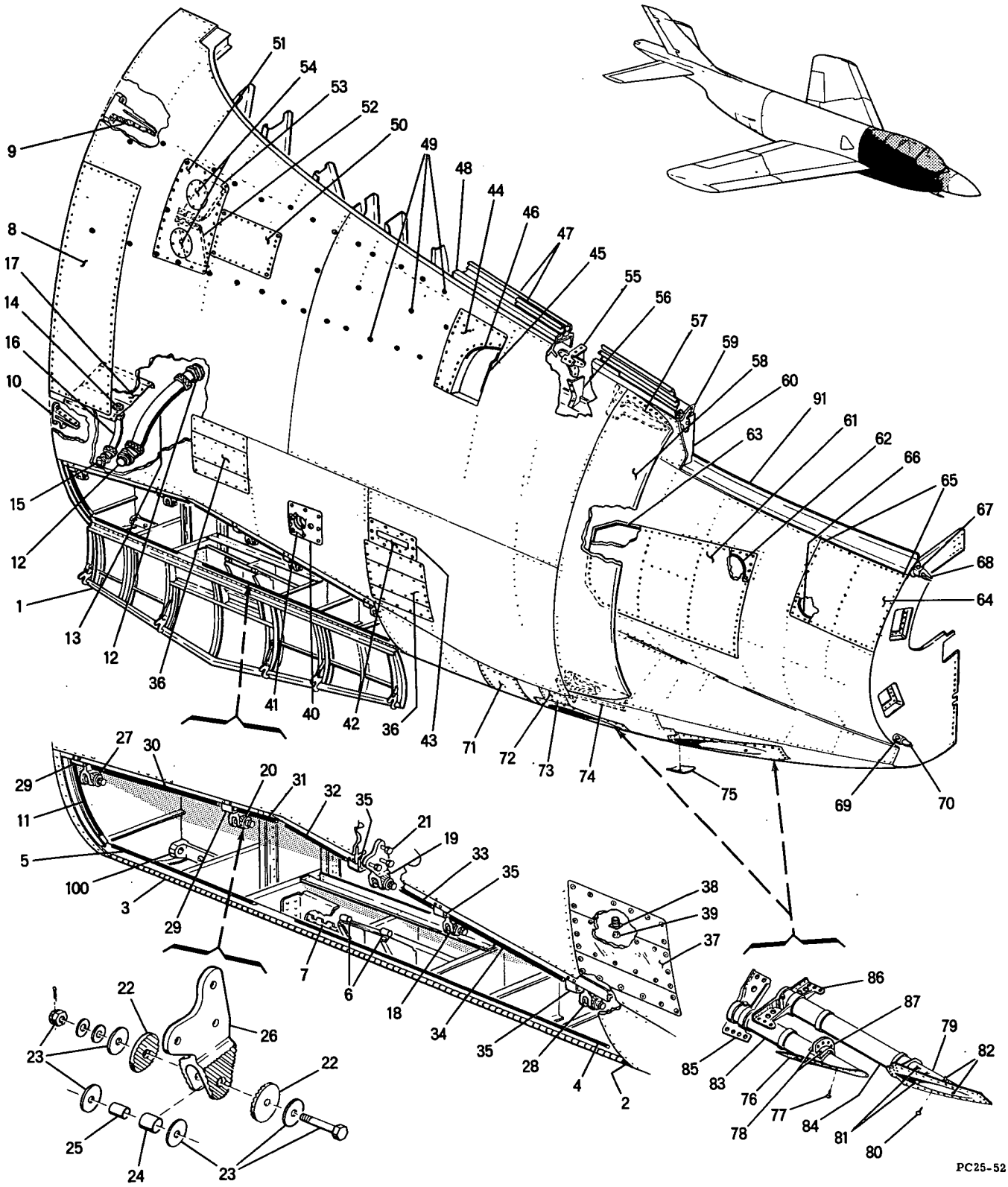

Figure 47 -- Forward Fuselage Right Side Panel Assembly (Sheet 1 of 2)

FIGURE & INDEX NUMBER	PART NUMBER	1 2 3 4 5 6 7 DESCRIPTION	UNITS PER ASS'Y	USABLE ON CODE
47 - 22	25-31354- 3	. . PLATE, GUN COMPARTMENT DOOR LATCH PIN	2	
		ATTACHING PARTS		
- 23	AN4-14	. . BOLT	1	
	4M36-02001	. . WASHER (MDA)	4	
	AN960D416	. . WASHER	2	
	AN310-4	. . NUT	1	
	AN380-2-2	. . PIN, COTTER	1	
		¤----¤-¤-¤----¤		
- 24	25-31356- 3	. . SPACER, GUN COMPARTMENT DOOR LATCH	1	
- 25	25-31355- 3	. . BUSHING, GUN COMPARTMENT DOOR LATCH	1	
	25-31359- 4	. . BRACKET, FUS STA 189.60, RIGHT SIDE	1	
	25-31058- 5	. . BRACKET, FUS STA 197.85, RIGHT SIDE	1	
- 26	25-31058- 6	. . BRACKET, FUS STA 214.35, RIGHT SIDE	1	
	25-31296- 2	. CHANNEL ASSY, SIDE PANEL STIFFENER RH	1	
- 27	25-31358- 1	. . BRACKET ASSY, GUN COMPT DOOR LATCH, FUS STA 232.4 RIGHT SIDE	1	
	25-31354- 3	. . . PLATE, GUN COMPARTMENT DOOR LATCH PIN	2	
		ATTACHING PARTS		
	AN4-14	. . . BOLT	1	
	4M36-02001	. . . WASHER (MDA)	4	
	AN960D416	. . . WASHER	2	
	AN310-4	. . . NUT	1	
	AN380-2-2	. . . PIN, COTTER	1	
		¤----¤-¤-¤----¤		
	25-31356- 3	. . . SPACER, GUN COMPARTMENT DOOR LATCH	1	
	25-31355- 3	. . . BUSHING, GUN COMPARTMENT DOOR LATCH	1	
	25-31198- 2	. BRACKET ASSY, GUN COMPARTMENT DOOR LATCH RH	1	A
	25-31198-302	. BRACKET ASSY, GUN COMPARTMENT DOOR LATCH RH	1	B-F
- 28	25-31357- 1	. . BRACKET ASSY, GUN COMPT DOOR LATCH, FUS STA 173.1, RIGHT SIDE	1	
	25-31354- 3	. . . PLATE, GUN COMPARTMENT DOOR LATCH PIN	2	
		ATTACHING PARTS		
	AN4-14	. . . BOLT	1	
	4M36-02001	. . . WASHER (MDA)	4	
	AN960D416	. . . WASHER	2	
	AN310-4	. . . NUT	1	
	AN380-2-2	. . . PIN, COTTER	1	
		¤----¤-¤-¤----¤		
	25-31356- 3	. . . SPACER, GUN COMPARTMENT DOOR LATCH	1	
	25-31355- 3	. . . BUSHING, GUN COMPARTMENT DOOR LATCH	1	
	25-31268- 2	. SILL ASSY, ARMAMENT ACCESS DOOR RH	1	
- 29	25-31294- 7	. . BUMPER, ARMAMENT ACCESS DOOR ADJUSTING	2	
		ATTACHING PARTS		
	AN509-10R11	. . SCREW	4	
	AN960D3	. . WASHER	4	
	AN365-1032	. . NUT	4	
		¤----¤-¤-¤----¤		
	25-31295- 3	. . PLATE, ARMAMENT ACCESS DOOR ADJUSTING, USE WITH INDEX 29	2	
- 30	25-31268- 25	. . SEAL, SELECTED FROM 9M55B (MDA)	1	
- 31	25-31268- 19	. . SEAL, SELECTED FROM 9M55B (MDA)	1	
	25-31144- 2	. LONGERON ASSY, UPPER GUN RH	1	
- 32	25-31144- 28	. . SEAL, RH, SELECTED FROM 9M55B (MDA)	1	
- 33	25-31144- 26	. . SEAL, RH, SELECTED FROM 9M55B (MDA)	1	
- 34	25-31144- 24	. . SEAL, RH, SELECTED FROM 9M55B (MDA)	1	
- 35	25-31294- 7	. . BUMPER, ARMAMENT ACCESS DOOR ADJUSTING	3	
		ATTACHING PARTS		
	AN509-10R10	. . SCREW	6	
	AN960D10L	. . WASHER	6	
	AN364-1032	. . NUT	6	
		¤----¤-¤-¤----¤		
	25-31295- 3	. . PLATE, ARMAMENT ACCESS DOOR ADJUSTING, USE WITH INDEX 35	3	
- 36	25-87006- 1	. ANTENNA ASSY, 1000 MC FLUSH	2	A
		ATTACHING PARTS		
	AN509-10R11	. SCREW	44	
		¤----¤-¤-¤----¤		
- 37	25-87006- 11	. . WINDOW	1	A
		ATTACHING PARTS		
	AN509-10R8	. . SCREW	8	
		¤----¤-¤-¤----¤		
- 38	UG496/U	. . RECEPTACLE	1	A

FIGURE & INDEX NUMBER	PART NUMBER	1 2 3 4 5 6 7 DESCRIPTION	UNITS PER ASS'Y	USABLE ON CODE
47 -		ATTACHING PARTS		
	AN515-4R14	. . SCREW	4	
	25-87082- 3	. . SPACER, 1000 MC FLUSH ANTENNA	1	A
	AN960D4	. . WASHER	4	
	AN365-440	. . NUT	4	
		¤----¤-¤-¤----¤		
- 39	25-87076- 3	. . CONNECTOR, 1000 MC FLUSH ANTENNA FEED	1	A
- 40	25-31308- 1	. DOOR ASSY, PITCH ANGLE DETECTOR ACCESS	1	A-B
		ATTACHING PARTS		
	AN509-10R20	. SCREW	8	
		¤----¤-¤-¤----¤		
	25-32214- 1	. . CHAIN ASSEMBLY, NOSE GEAR TRUNNION BOLT ACCESS COVER	1	A-B
	NAF1088-1A4	. . . CHAIN	1	A-B
	RS109	. . . SWIVEL (RYY)	1	A-B
	RS102	. . . LINK (RYY)	1	A-B
- 41	25-76086- 1	. ADAPTER ASSY, ANGLE OF ATTACK TRANSMITTER MTG	1	A-B
	25-76130- 3	. ADAPTER, ANGLE OF ATTACK TRANSDUCER MTG	1	C-F
- 42	25-31217- 2	. DOOR ASSY, FORMATION LIGHT RH, SEE FIG. 49	1	A-B
	25-31217-302	. DOOR ASSY, FORMATION LIGHT RH, SEE FIG. 49	1	C-F
		ATTACHING PARTS		
- 43	AN509-10R11	. SCREW	10	
		¤----¤-¤-¤----¤		
- 44	25-31196- 4	. COVER, GUN AIR INLET RH	1	
		ATTACHING PARTS		
	AN509-10R11	. SCREW	30	
		¤----¤-¤-¤----¤		
	25-31014- 2	. FRAME ASSY, FUSELAGE STATION 155.68 RH	1	A
	25-31014-302	. FRAME ASSY, FUSELAGE STATION 155.68 RH	1	B-F
- 45	25-31014-105	. . SEAL, SELECTED FROM 11M603 (MDA)	1	
	25-31197- 2	. SUPPORT ASSY, GUN AIR SCOOP RH	1	
- 46	25-31197- 5	. . SEAL, SELECTED FROM 11M603 (MDA)	1	
- 47	25-31119- 6	. TRACK, CANOPY ROLLER RH	1	
- 48	25-31120- 4	. RETAINER, CANOPY SIDE RH	1	
- 49	8736	. SKRU, LOK (DL)	36	
	AN509-10R12	. SCREW, USE WITH INDEX 49	36	
- 50	25-31393- 3	. DOOR, REFUELING PROBE LINKAGE ACCESS	1	D-F
		ATTACHING PARTS		
	AN509-10R10	. SCREW	24	
	AN509-416R12	. SCREW	4	
		¤----¤-¤-¤----¤		
- 51	25-31394- 1	. DOOR ASSEMBLY, HYDRAULIC DISCONNECT ACCESS	1	D-F
		ATTACHING PARTS		
	AN509-10R12	. SCREW	27	
		¤----¤-¤-¤----¤		
- 52	25-31394- 3	. . PLATFORM ASSEMBLY	1	D-F
		ATTACHING PARTS		
	25-31394- 19	. . PIN, HINGE, ALTERED FROM GOVERNMENT STANDARD PART NO. AN253-2-425	1	D-F
		¤----¤-¤-¤----¤		
	MS20001PH4-240	. . . HINGE, HALF	1	D-F
- 53	25-31394- 5	. . PLATFORM ASSEMBLY	1	D-F
		ATTACHING PARTS		
	25-31394- 19	. . PIN, HINGE, ALTERED FROM GOVERNMENT STANDARD PART NO. AN253-2-425	1	D-F
		¤----¤-¤-¤----¤		
	MS20001PH4-240	. . . HINGE, HALF	1	D-F
	25-31395- 3	. . . SPRING, ARMAMENT ACCESS DOOR ADJUSTING	1	D-F
	MS20001PH4-240	. . HINGE, HALF	2	D-F
- 54	25-31394- 11	. . PLATE, COVER	2	D-F
		ATTACHING PARTS		
	AN509-10R9	. . SCREW	12	
		¤----¤-¤-¤----¤		
	25-31012- 2	. FRAME ASSY, FUS STA 145.68 RH	1	
- 55	25-31137- 4	. . FITTING, FUS STA 145.68 CANOPY SILL RH, FOR FUTURE PROCUREMENT USE 25-31137-6	1	A-C
	25-31137- 6	. . FITTING, FUS STA 145.68 CANOPY SILL RH, USE FOR FUTURE PROCUREMENT TO REPLACE 25-31137-4	1	
- 56	25-31067- 4	. . FITTING, FRAME FUS STA 145.68 RH	1	
	25-31046- 2	. FITTING ASSY, ENGINE AIR DUCT UPPER RH	1	
- 57	25-31046- 4	. . FITTING RH	1	

FIGURE & INDEX NUMBER	PART NUMBER	1 2 3 4 5 6 7 DESCRIPTION	UNITS PER ASS'Y	USABLE ON CODE
47 - 58	25-31045- 4	• LIP, ENGINE AIR DUCT RH	1	
- 59	25-31044- 4	• FITTING, WINDSHIELD ATTACH RH	1	
		ATTACHING PARTS		
	NAS229-17	• SCREW	1	
	AN960D10	• WASHER	1	
	AN365-1032	• NUT	1	
		¤----¤-¤-¤----¤		
- 60	25-31065- 2	• FITTING ASSY, FRAME CANTED FUS STA 129.06 RH	1	
	25-31064- 2	• PANEL ASSY, CONSOLE ACCESS RH	1	A
	25-31095- 2	• PANEL ASSY, CONSOLE ACCESS RH	1	B-F
- 61	25-31064- 4	• • DOOR RH	1	A
	25-31095- 4	• • DOOR RH	1	B-F
		ATTACHING PARTS		
	AN509-10R11	• • SCREW	95	
		¤----¤-¤-¤----¤		
	25-31088- 2	• DOUBLER ASSEMBLY, CONSOLE ACCESS PANEL	1	B-F
- 62	25-31088- 9	• • SEAL, SELECTED FROM 9M7102A (MDA)	1	B-F
- 63	25-31088- 11	• • SEAL, SELECTED FROM 9M7102A (MDA)	1	B-F
- 64	25-31183- 4	• DOOR, RUDDER PEDAL ACCESS RH	1	A
	25-31183- 6	• DOOR, RUDDER PEDAL ACCESS RH	1	B-F
		ATTACHING PARTS		
- 65	AN509-10R13	• SCREW, UPPER	14	
	AN509-10R9	• SCREW	41	A
	AN509-10R11	• SCREW	41	B-F
		¤----¤-¤-¤----¤		
	25-31079- 2	• DOUBLER ASSEMBLY, RUDDER PEDAL ACCESS DOOR	1	B-F
- 66	25-31079- 5	• • SEAL, SELECTED FROM 9M7102A (MDA)	1	B-F
- 67	25-31038- 2	• FITTING ASSY, REMOVABLE NOSE SUPPORT UPPER RH, FOR FUTURE PROCUREMENT USE 25-31038-302	1	A
	25-31038-302	• FITTING ASSY, REMOVABLE NOSE SUPPORT UPPER RH, USE FOR FUTURE PROCUREMENT TO REPLACE 25-31038-2	1	A-B
	25-31038-304	• FITTING ASSY, REMOVABLE NOSE SUPPORT UPPER RH	1	C-F
- 68	25-31103- 4	• • PIN, REMOVABLE NOSE SUPPORT FITTING RH	1	25-31038-2
	25-31103- 8	• • PIN, REMOVABLE NOSE SUPPORT FITTING RH	1	25-31038-302 & -304
- 69	25-31040- 2	• FITTING ASSY, REMOVABLE NOSE SUPPORT LOWER RH, FOR FUTURE PROCUREMENT USE 25-31040-302	1	A
	25-31040-302	• FITTING ASSY, REMOVABLE NOSE SUPPORT LOWER RH, USE FOR FUTURE PROCUREMENT TO REPLACE 25-31040-2	1	A-B
	25-31040-304	• FITTING ASSY, REMOVABLE NOSE SUPPORT LOWER RH	1	C-F
- 70	25-31103- 3	• • PIN, REMOVABLE NOSE SUPPORT FITTING LH	1	25-31040-2
	25-31103- 6	• • PIN, REMOVABLE NOSE SUPPORT FITTING RH	1	25-31040-302 & -304
- 71	25-31209- 2	• DOOR ASSY, LOWER GUN FWD MOUNT ACCESS RH	1	
		ATTACHING PARTS		
	AN509-10R11	• SCREW	24	
		¤----¤-¤-¤----¤		
	25-32214- 1	• • CHAIN ASSEMBLY, NOSE GEAR TRUNNION BOLT ACCESS COVER	1	
	NAF1088-1A4	• • • CHAIN	1	
	RS109	• • • SWIVEL (RYY)	1	
	RS102	• • • LINK (RYY)	1	
- 72	25-31208- 4	• DOOR, UPPER GUN MOUNT ACCESS RH	1	
		ATTACHING PARTS		
- 73	AN509-10R12	• SCREW	17	
		¤----¤-¤-¤----¤		
	25-31047- 2	• FITTING ASSY, ENGINE AIR DUCT LOWER RH	1	
- 74	25-31047- 4	• • FITTING RH	1	
- 75	25-31203- 2	• COVER ASSY, NOSE GEAR TRUNNION BOLT ACCESS RH	1	
		ATTACHING PARTS		
	AN509-10R12	• SCREW	12	
		¤----¤-¤-¤----¤		
	25-32214- 1	• • CHAIN ASSEMBLY, NOSE GEAR TRUNNION BOLT ACCESS COVER	1	
	NAF1088-1A4	• • • CHAIN	1	
	RS109	• • • SWIVEL (RYY)	1	
	RS102	• • • LINK (RYY)	1	
- 76	25-71091- 6	• PORT, LOWER BLAST RH	1	
		ATTACHING PARTS		
- 77	AN509-10R12	• SCREW, OUTBOARD	21	
- 78	AN509-10R15	• SCREW, INBOARD	4	
		¤----¤-¤-¤----¤		

Forward Fuselage

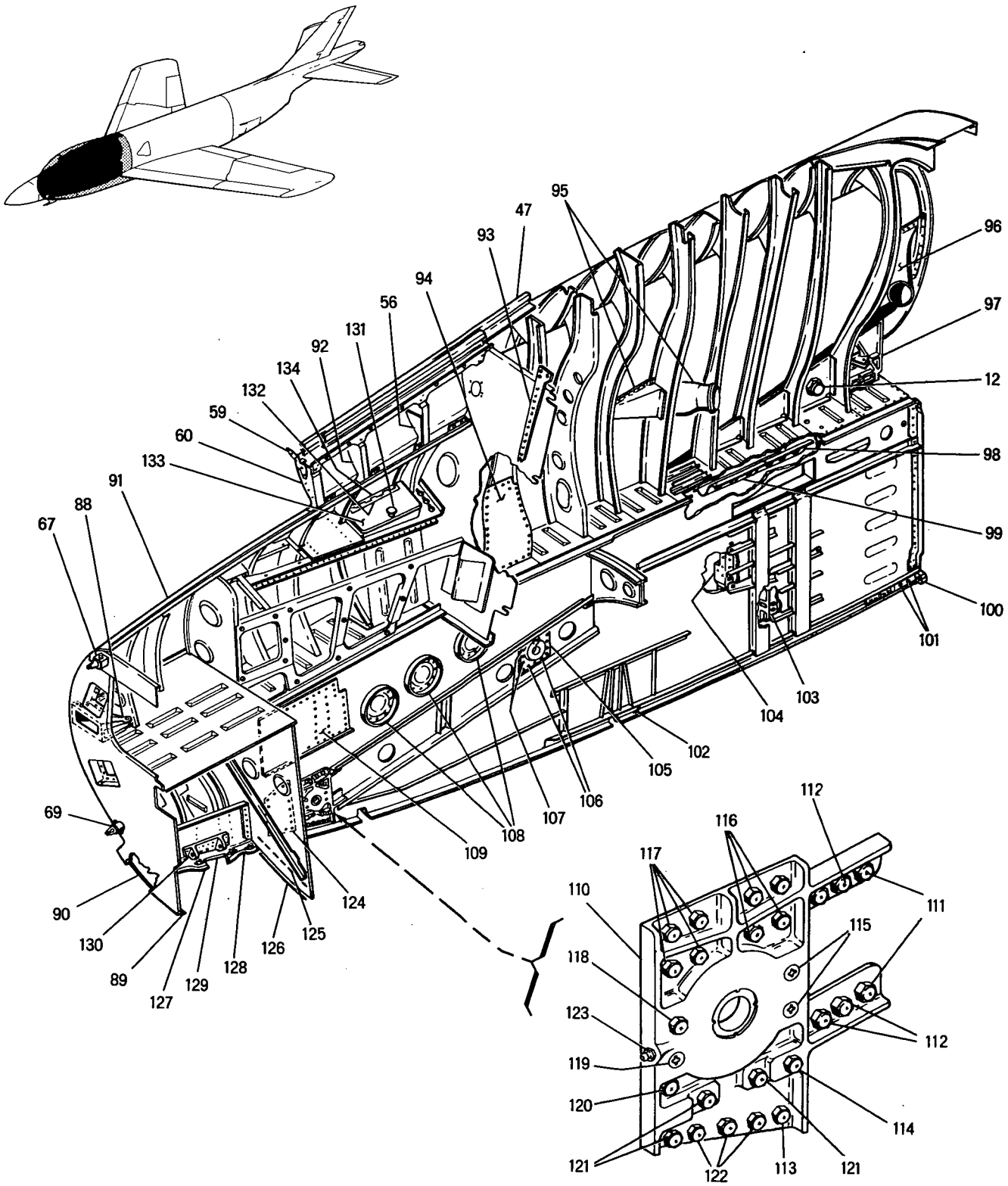

Figure 47 -- Forward Fuselage Right Side Panel Assembly (Sheet 2 of 2)

FIGURE & INDEX NUMBER	PART NUMBER	1 2 3 4 5 6 7 DESCRIPTION	UNITS PER ASS'Y	USABLE ON CODE
47 - 79	25-71090- 8	• PORT, UPPER BLAST RH	1	
		ATTACHING PARTS		
- 80	AN509-10R12	• SCREW, OUTBOARD	35	
- 81	AN509C416-14	• SCREW, AFT INBOARD	2	
- 82	AN509C416-16	• SCREW, FORWARD INBD	2	
		¤----¤-¤-¤----¤		
- 83	25-71046- 1	• TUBE ASSY, LOWER BLAST	1	
- 84	25-71045-301	• TUBE ASSY, UPPER BLAST	1	
- 85	25-31081- 4	• FITTING, LOWER GUN FWD MOUNT RH	1	
- 86	25-31080- 4	• FITTING, UPPER GUN FWD MOUNT RH	1	
	25-31011- 6	• FRAME ASSY, CANTED FUS STA 138.43 LOWER RH	1	
- 87	25-31089- 2	• • SUPPORT ASSY, LOWER BLAST PORT RH	1	
- 88	25-61024- 3	• BRACKET, RUDDER CONTROL FUS STA 92.10	1	
	25-31005- 2	• BULKHEAD ASSY, CANTED FUS STA 88.00 RH	1	A
	25-31005-302	• BULKHEAD ASSY, CANTED FUS STA 88.00 RH	1	B
	25-31005-304	• BULKHEAD ASSY, CANTED FUS STA 88.00 RH	1	C-F
- 89	25-31005-109	• • SEAL, SELECTED FROM 11M601 (MDA)	1	
- 90	25-31005-133	• • SEAL, SELECTED FROM 11M601 (MDA)	1	
- 91	25-31028- 2	• LONGERON ASSY, WINDSHIELD SILL RH	1	
- 92	25-31066- 4	• FITTING, FRAME CANTED FUS STA 138.43 RH	1	
	25-31013- 2	• BULKHEAD ASSY, CANTED FUS STA 145.68 RH	1	A
	25-31013-302	• BULKHEAD ASSY, CANTED FUS STA 145.68 RH	1	B-F
- 93	25-31281- 4	• • FITTING, EJECTION SEAT UPPER SUPPORT RH	1	A
	25-31281- 6	• • FITTING, EJECTION SEAT UPPER SUPPORT RH	1	B-F
- 94	25-31201- 5	• COVER, ELECTRICAL PLUG BOX	1	A
	25-31201- 7	• COVER, ELECTRICAL PLUG BOX	1	B-F
		ATTACHING PARTS		
	NAS229DD9	• SCREW	38	A
	NAS229DD9	• SCREW	36	B-F
		¤----¤-¤-¤----¤		
- 95	25-83006- 3	• DUCT, REFRIGERATION UNIT COOLING AIR INLET	1	
- 96	25-83007- 3	• DUCT, REFRIGERATION UNIT COOLING AIR EXIT	1	
- 97	25-31052- 1	• FITTING ASSY, ELEVATOR & RUDDER CONTROL SUPPORT	1	
- 98	25-31369- 3	• GUARD, AILERON CONTROL	1	
- 99	25-31368- 1	• GUARD ASSY, AILERON CONTROL	1	
	25-31029- 2	• WEB ASSY, BUTTOCK LINE 12.50 RH	1	
-100	25-31043- 4	• • FITTING, LOWER LONGERON SPLICE AFT RH	1	
-101	25-31108- 3	• • BUSHING, LOWER LONGERON FITTING	2	
	25-31027- 2	• • LONGERON ASSY, FWD FUSELAGE LOWER RH	1	
-102	25-31027- 4	• • • LONGERON, FWD FUSELAGE LOWER RH	1	
-103	25-31102- 3	• • FITTING, GUN REAR SUPPORT LOWER	1	
-104	25-31116- 5	• • FITTING, UPPER GUN REAR MOUNT	1	
-105	25-31053- 2	• • TRUNNION ASSY, NOSE LANDING GEAR DRAG BRACE RH	1	
		ATTACHING PARTS		
	AN4-7A	• • BOLT	7	
	AN960D416L	• • WASHER	7	
	AN960D416	• • WASHER	7	
	AN365-428	• • NUT	7	
-106	AN4-7A	• • BOLT, UPPER & LOWER	6	
	AN960D416L	• • WASHER	6	
	AN960D416	• • WASHER	12	
	AN365-428	• • NUT	6	
-107	AN509-416R15	• • SCREW, FWD CENTER	3	
	AN960D416	• • WASHER	3	
	AN365-428	• • NUT	3	
		¤----¤-¤-¤----¤		
	HSSB14-1	• • • BEARING (HLF)	1	
	AN944-101	• • • FITTING, LUB	1	
-108	25-31278- 1	• • DOOR, SHEAR WEB	3	
		ATTACHING PARTS		
	AN3-5A	• • BOLT	42	
	AN960D10L	• • WASHER	42	
		¤----¤-¤-¤----¤		
	25-32214- 1	• • • CHAIN ASSEMBLY, NOSE GEAR TRUNNION BOLT ACCESS COVER	1	
	NAF1088-1A4	• • • • CHAIN	1	
	RS109	• • • • SWIVEL (RYY)	1	
	RS102	• • • • LINK (RYY)	1	
-109	25-31029-110	• • DOOR	1	
		ATTACHING PARTS		
	AN3-6A	• • BOLT	57	
	AN960D10	• • WASHER	57	
	AN3-7A	• • BOLT	1	
	AN960D10L	• • WASHER	1	
		¤----¤-¤-¤----¤		

FIGURE & INDEX NUMBER	PART NUMBER	1 2 3 4 5 6 7 DESCRIPTION	UNITS PER ASS'Y	USABLE ON CODE
47 -110	25-31113- 1	• • FITTING ASSY, NOSE GEAR FRONT TRUNNION	1	
		ATTACHING PARTS		
-111	AN5-7A	• • BOLT	2	
	AN960D516L	• • WASHER	2	
	AN960D516	• • WASHER	2	
	AN365-524	• • NUT	2	
-112	AN5-7A	• • BOLT	4	
	AN960D516L	• • WASHER	4	
	AN960D516	• • WASHER	8	
	AN365-524	• • NUT	4	
-113	AN4-12A	• • BOLT	1	
	AN960D416L	• • WASHER	1	
	AN960D416	• • WASHER	2	
	AN365-428	• • NUT	1	
-114	AN4-13A	• • BOLT	1	
	AN960D416L	• • WASHER	1	
	AN960D416	• • WASHER	1	
	AN365-428	• • NUT	1	
-115	AN509-416R21	• • SCREW	2	
	AN960D416	• • WASHER	4	
	AN365-428	• • NUT	2	
-116	AN4-10A	• • BOLT	4	
	AN960D416L	• • WASHER	4	
	AN960D416	• • WASHER	8	
	AN365-428	• • NUT	4	
-117	AN4-11A	• • BOLT	4	
	AN960D416	• • WASHER	12	
	AN365-428	• • NUT	4	
-118	AN4-14A	• • BOLT	1	
	AN960D416L	• • WASHER	1	
	AN960D416	• • WASHER	2	
	AN365-428	• • NUT	1	
-119	AN509-416R23	• • SCREW	1	
	AN960D416	• • WASHER	2	
	AN365-428	• • NUT	1	
-120	AN4-11A	• • BOLT	1	
	AN960D416L	• • WASHER	1	
	AN960D416	• • WASHER	2	
	AN365-428	• • NUT	1	
-121	AN4-11A	• • BOLT	3	
	AN960D416L	• • WASHER	3	
	AN960D416	• • WASHER	3	
	AN365-428	• • NUT	3	
-122	AN4-10A	• • BOLT	3	
	AN960D416	• • WASHER	9	
	AN365-428	• • NUT	3	
		¤----¤-¤-¤----¤		
	HSSB18-1	• • • BEARING (HLF)	1	
-123	AN944-101	• • • FITTING, LUB	1	
-124	25-31029-119	• • DOOR	1	
		ATTACHING PARTS		
	AN3-5A	• • BOLT	15	
	AN960D10L	• • WASHER	15	
		¤----¤-¤-¤----¤		
	25-31008- 2	• FRAME ASSY, CANTED FUSELAGE STATION 111.00 RH	1	A
	25-31008-302	• FRAME ASSY, CANTED FUSELAGE STATION 111.00 RH	1	B-F
-125	9M55-2B1050	• • STRIP, SEALING (MDA)	1	
-126	25-31008- 91	• • SEAL, SELECTED FROM 11M601 (MDA)	1	
	25-31319- 1	• WEB ASSY, COMPUTER COMPARTMENT SHEAR	1	A-B
	25-31319-301	• WEB ASSY, COMPUTER COMPARTMENT SHEAR	1	C-F
	25-31280- 1	• • LONGERON ASSY, RADAR COMPUTER COMPARTMENT	1	A-B
	25-31280-301	• • LONGERON ASSY, RADAR COMPUTER COMPARTMENT	1	C-F
-127	25-31280- 19	• • • SEAL, SELECTED FROM 11M607 (MDA)	1	
-128	25-31280- 21	• • • SEAL, SELECTED FROM 11M607 (MDA)	1	
-129	25-31280- 3	• • • LONGERON	1	A-B
	25-31280- 13	• • • LONGERON	1	C-F
-130	25-31328- 1	• SUPPORT ASSY, COMPUTER RACK HINGE	1	
	4M34-6-33	• • BUSHING (MDA)	2	
	25-31071- 1	• CONSOLE ASSY, STRUCTURAL RH	1	
	25-31071- 17	• • DOOR ASSY, DATA CASE	1	
		ATTACHING PARTS		
	AN253-2-800	• • PIN, HINGE	1	
		¤----¤-¤-¤----¤		
-131	9M9102-2A	• • • KNOB (MDA)	1	
	AN936A6	• • • WASHER, LOCK	2	
	P116-447-16-24A	• • • STUD (TIN) USE WITH A1663-022-1 CATCH (TIN)	1	

FIGURE & INDEX NUMBER	PART NUMBER	1 2 3 4 5 6 7 DESCRIPTION	UNITS PER ASS'Y	USABLE ON CODE
47 -132	25-31071- 39	. . . HINGE, HALF, ALTERED FROM GOVT STANDARD PART NO. AN257H4-800	1	
-133	25-31071- 37	. . . DOOR	1	
-134	25-31071- 41	. . HINGE, HALF, ALTERED FROM GOVT STANDARD PART NO. AN257H4-800	1	
	25-31124- 3	. . SPRING, DATA CASE DOOR	3	

Forward Fuselage

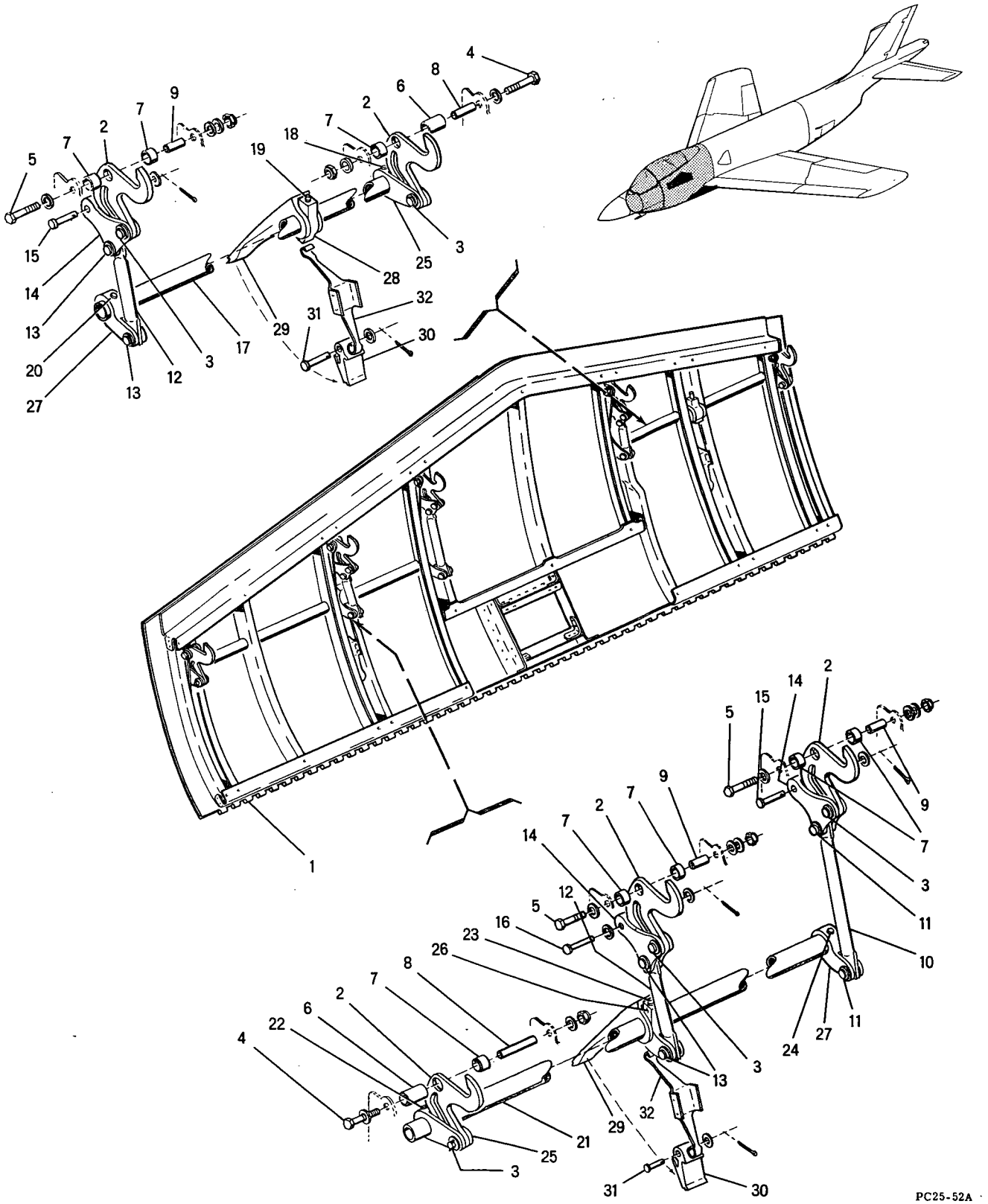

Figure 48 - Gun Compartment Door Assembly

FIGURE & INDEX NUMBER	PART NUMBER	1 2 3 4 5 6 7 DESCRIPTION	UNITS PER ASS'Y	USABLE ON CODE
48 -	25-31056- 1	DOOR ASSY, GUN COMPARTMENT LH, SEE FIG. 46-1 FOR NEXT HIGHER ASSY	REF	
	25-31056- 2	DOOR ASSY, GUN COMPARTMENT RH, SEE FIG. 47-1 FOR NEXT HIGHER ASSY	REF	
- 1	25-31320- 4	. HINGE, ARMAMENT ACCESS DOOR UPPER RH, ALTERED FROM 9M82H2A5927 (MDA)	1	
	25-31320- 3	. HINGE, ARMAMENT ACCESS DOOR UPPER LH, ALTERED FROM 9M82H2A5927 (MDA)	1	
- 2	25-31284- 5	. HOOK, ARMAMENT ACCESS DOOR	5	
		ATTACHING PARTS		
- 3	AN393-19	. PIN, FLAT HEAD	5	
	AN960D10L	. WASHER	5	
	AN960D10	. WASHER	5	
	AN381-2-6	. PIN, COTTER	5	
- 4	AN4-15A	. BOLT, FWD & AFT HOOKS	2	
	AN960D416L	. WASHER	2	
	AN960D416	. WASHER	2	
	AN364-428	. NUT	2	
- 5	AN4-12A	. BOLT	3	
	AN960D416L	. WASHER	3	
	AN960D416	. WASHER	6	
	AN364-428	. NUT	3	
		¤----¤-¤-¤----¤		
- 6	NAS43-7-36	. SPACER	2	
- 7	NAS43-7-14	. SPACER	8	
- 8	25-31329- 5	. BUSHING, ARMAMENT ACCESS DOOR	2	
- 9	25-31329- 3	. BUSHING, ARMAMENT ACCESS DOOR	3	
- 10	25-31291- 5	. CONNECTOR, ARMAMENT ACCESS DOOR	1	
		ATTACHING PARTS		
- 11	AN393-19	. PIN, FLAT HEAD	2	
	AN960D10L	. WASHER	2	
	AN960D10	. WASHER	2	
	AN381-2-6	. PIN, COTTER	2	
		¤----¤-¤-¤----¤		
- 12	25-31291- 3	. CONNECTOR, ARMAMENT ACCESS DOOR	2	
		ATTACHING PARTS		
- 13	AN393-19	. PIN, FLAT HEAD	4	
	AN960D10L	. WASHER	4	
	AN960D10	. WASHER	4	
	AN381-2-6	. PIN, COTTER	4	
		¤----¤-¤-¤----¤		
- 14	25-31288- 3	. LEVER, ARMAMENT ACCESS DOOR	3	
		ATTACHING PARTS		
- 15	AN394-23	. PIN, FLAT HEAD	2	
	AN960D416L	. WASHER	2	
	AN381-2-8	. PIN, COTTER	2	
- 16	AN394-23	. PIN, FLAT HEAD	1	
	AN960D416L	. WASHER	2	
	AN381-2-8	. PIN, COTTER	1	
		¤----¤-¤-¤----¤		
	25-31293- 5	. TUBE, ARM ACCESS DOOR AFT TORQUE LH	1	
- 17	25-31293- 6	. TUBE, ARM ACCESS DOOR AFT TORQUE RH	1	
		ATTACHING PARTS		
- 18	AN393-33	. PIN, FLAT HEAD	1	
	AN960D10L	. WASHER	1	
	AN381-2-6	. PIN, COTTER	1	
- 19	AN393-53	. PIN, FLAT HEAD	1	
	AN960D10L	. WASHER	1	
	AN381-2-6	. PIN, COTTER	1	
- 20	AN393-29	. PIN, FLAT HEAD	1	
	AN960D10L	. WASHER	1	
	AN381-2-6	. PIN, COTTER	1	
		¤----¤-¤-¤----¤		
	25-31292- 3	. TUBE, ARM ACCESS DOOR ASSEMBLY FWD TORQUE LH	1	
- 21	25-31292- 4	. TUBE, ARM ACCESS DOOR ASSEMBLY FWD TORQUE RH	1	
		ATTACHING PARTS		
- 22	AN393-33	. PIN, FLAT HEAD	1	
	AN960D10L	. WASHER	1	
	AN381-2-6	. PIN, COTTER	1	
- 23	AN393-53	. PIN, FLAT HEAD	1	
	AN960D10L	. WASHER	1	
	AN381-2-6	. PIN, COTTER	1	
- 24	AN393-29	. PIN, FLAT HEAD	1	
	AN960D10L	. WASHER	1	
	AN381-2-6	. PIN, COTTER	1	
		¤----¤-¤-¤----¤		

FIGURE & INDEX NUMBER	PART NUMBER	1 2 3 4 5 6 7 DESCRIPTION	UNITS PER ASS'Y	USABLE ON CODE
48 - 25	25-31285- 3	• BELL CRANK, ARMAMENT ACCESS DOOR ASSEMBLY	2	
- 26	25-31287- 3	• ARM, ARMAMENT ACCESS DOOR ASSEMBLY ROCKER	1	
- 27	25-31289- 3	• ARM, ARMAMENT ACCESS DOOR ASSEMBLY	2	
- 28	25-31290- 5	• ROCKER, ARMAMENT ACCESS DOOR ASSEMBLY	1	
- 29	25-31286- 3	• HANDLE, ARMAMENT ACCESS DOOR ASSEMBLY	2	
- 30	25-35046- 3	• LATCH, CANOPY EMERGENCY EXTERNAL HANDLE	2	
		ATTACHING PARTS		
- 31	AN394-23	• PIN, FLAT HEAD	2	
	AN960D416L	• WASHER	2	
	AN381-2-8	• PIN, COTTER	2	
		¤----¤-¤-¤----¤		
- 32	25-31313- 3	• SPRING, ARMAMENT ACCESS DOOR	2	

Forward Fuselage

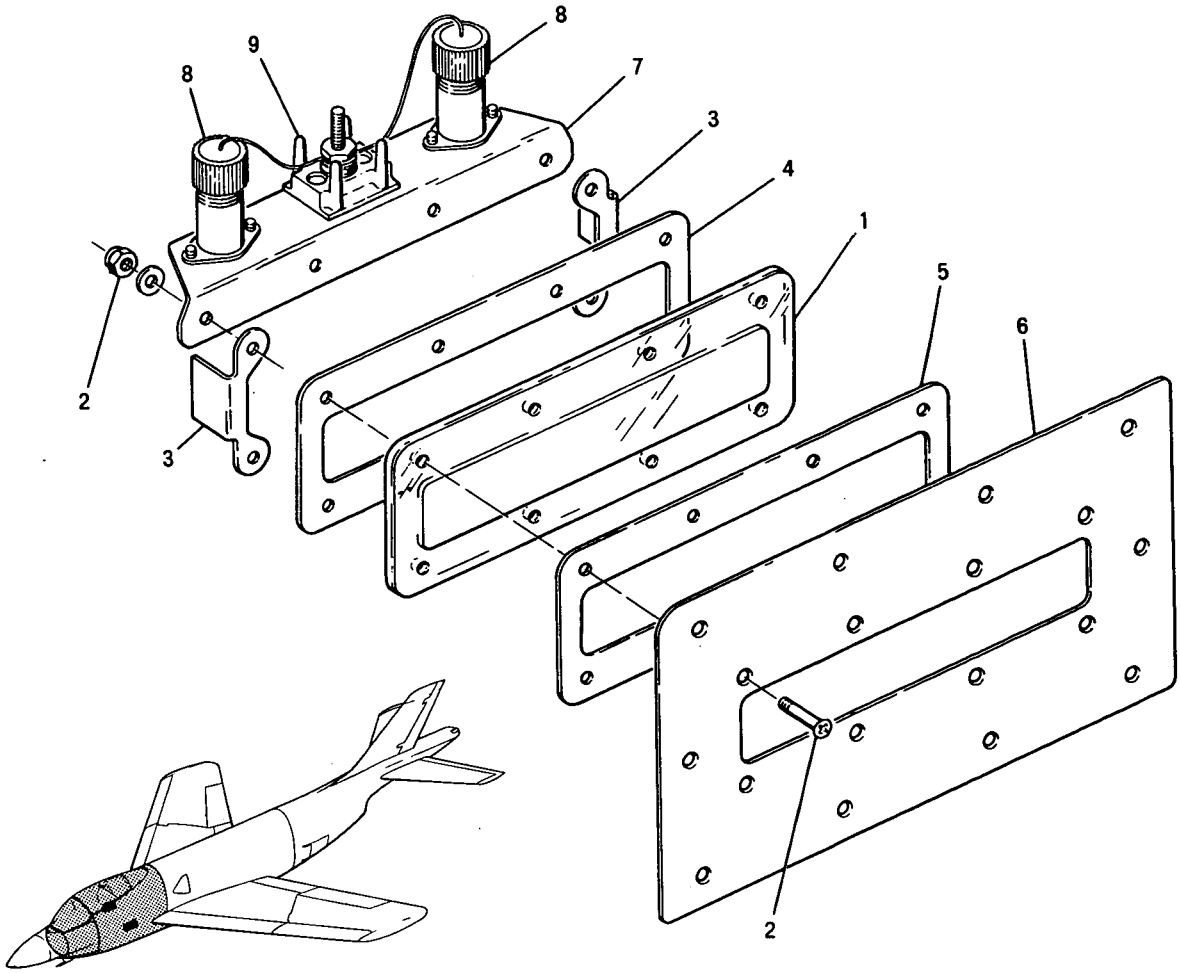

Figure 49 -- Formation Light Door Assembly

FIGURE & INDEX NUMBER	PART NUMBER	1 2 3 4 5 6 7 DESCRIPTION	UNITS PER ASS'Y	USABLE ON CODE
49 -	25-31217- 1	DOOR ASSY, FORMATION LIGHT LH, SEE FIG. 46-43 FOR NEXT HIGHER ASSY	REF	A-B
	25-31217-301	DOOR ASSY, FORMATION LIGHT LH, SEE FIG. 46-43 FOR NEXT HIGHER ASSY	REF	C-F
	25-31217- 2	DOOR ASSY, FORMATION LIGHT RH, SEE FIG. 47-42 FOR NEXT HIGHER ASSY	REF	A-B
	25-31217-302	DOOR ASSY, FORMATION LIGHT RH, SEE FIG. 47-42 FOR NEXT HIGHER ASSY	REF	C-F
- 1	25-31318- 1	• LENS ASSEMBLY, FORMATION LIGHT	1	
		ATTACHING PARTS		
- 2	AN507-632R10	• SCREW	8	
	AN960-6	• WASHER	8	
	AN365-632	• NUT	8	
		¤----¤-¤-¤----¤		
- 3	25-31217- 11	• ANGLE, LENS RETAINING	2	A-B
- 4	25-31217- 5	• FRAME, LENS RETAINING	1	
- 5	25-31217- 7	• GASKET, LENS	1	
- 6	25-31217- 3	• DOOR LH	1	
	25-31217- 4	• DOOR RH	1	
- 7	25-31217- 13	• CHANNEL, LENS RETAINING	1	C-F
	25-79000-A91	• BUNDLE ASSEMBLY, WIRE	2	C-F
- 8	AN3035-2	• • LIGHT ASSEMBLY	1	C-F
- 9	AN3436-2-1	• BLOCK ASSY, TERMINAL	1	C-F

Forward Fuselage

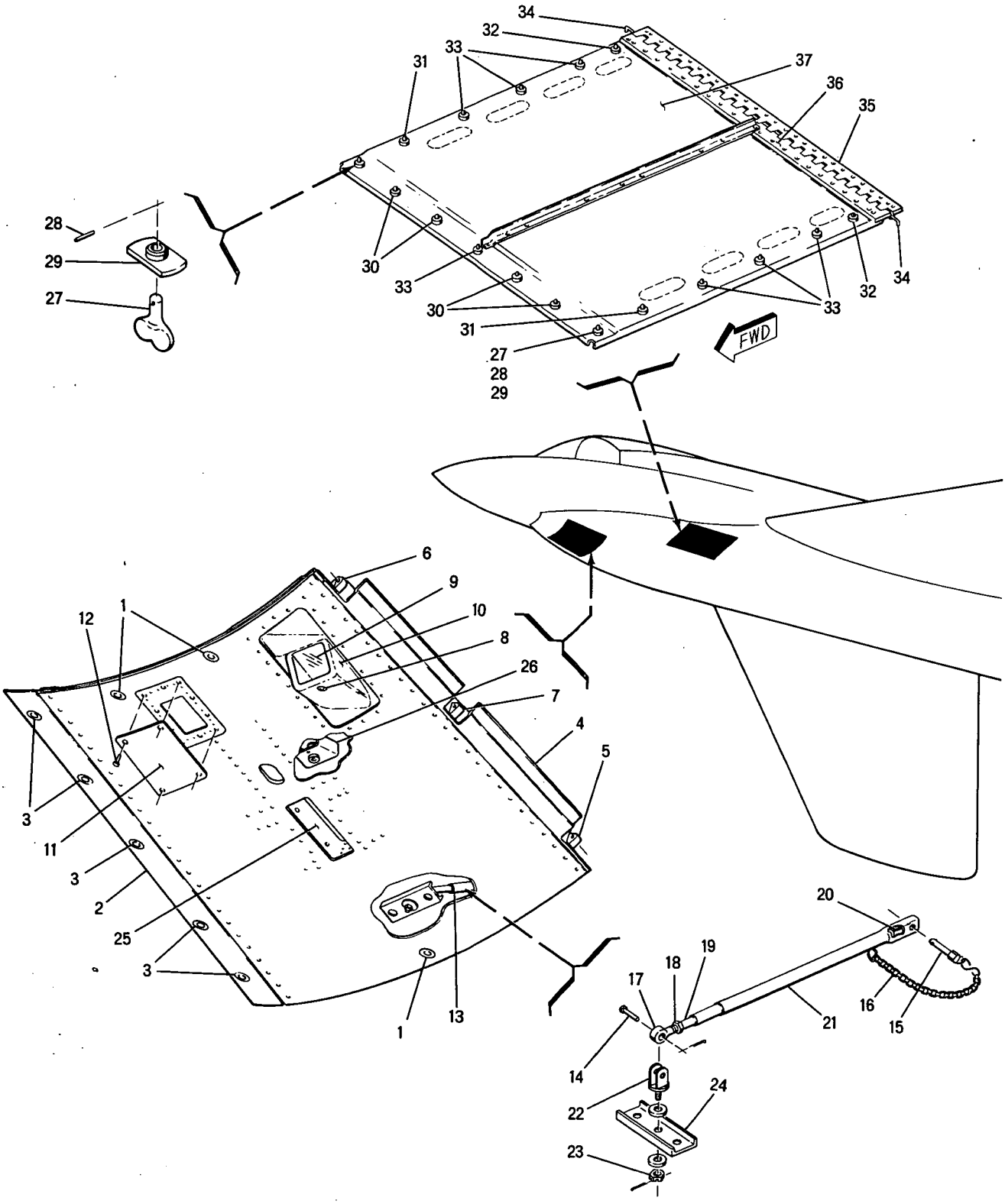

Figure 50 - Radar Computer Bay and Equipment Compartment Access Door Assemblies

FIGURE & INDEX NUMBER	PART NUMBER	1 2 3 4 5 6 7 DESCRIPTION	UNITS PER ASS'Y	USABLE ON CODE
.50 -	25-31364- 1	DOOR ASSEMBLY, RADAR COMPUTER BAY ACCESS, SEE FIG. 45-17 FOR NEXT HIGHER ASSEMBLY	REF	
- 1	9M68B365-390 #	• BUSHING ASSY (MDA) USE WITH 9M73-1-020 SPACER (MDA) & 99947P.130 RECEPTACLE (MKL)	3	
	9M70B2	• WASHER (MDA) USE WITH INDEX 1	3	
	9M61B1	• RING (MDA) USE WITH INDEX 1	3	
- 2	25-31360- 1	• CAP ASSEMBLY, COMPUTER ACCESS DOOR, RIGHT SIDE	1	
- 3	9M68B365-390 #	• • BUSHING ASSEMBLY (MDA) USE WITH 99947P.130 RECEPTACLE (MKL)	5	
	9M70B2	• • WASHER (MDA) USE WITH INDEX 3	5	
	9M61B1	• • RING, (MDA) USE WITH INDEX 3	5	
- 4	25-31361- 3	• CAP, COMPUTER ACCESS DOOR, LEFT SIDE	1	
- 5	25-31154- 7	• HINGE, COMPUTER ACCESS DOOR, AFT	1	
- 6	25-31154- 8	• HINGE, COMPUTER ACCESS DOOR, FORWARD	1	
- 7	25-31154- 9	• HINGE, COMPUTER ACCESS DOOR, CENTER	1	
	25-71241- 3	• RETAINER, GUN CAMERA WINDOW	1	
		ATTACHING PARTS		
- 8	AN509-10R7	• SCREW, LOWER	1	
	AN960D10	• WASHER	1	
	AN364-1032	• NUT	1	
	AN3-6A	• BOLT, UPPER	1	
	AN960D10L	• WASHER	1	
	4M23A10	• WASHER (MDA)	1	
	AN364-1032	• NUT	1	
		¤----¤-¤-¤----¤		
- 9	25-71240- 3	• WINDOW, GUN CAMERA	1	
- 10	25-71243- 5	• HOUSING, GUN CAMERA WINDOW	1	
- 11	25-31364- 51	• DOOR	1	
		ATTACHING PARTS		
- 12	AN509-10R7	• SCREW	10	
		¤----¤-¤-¤----¤		
- 13	25-31350- 1	• STRUT ASSY, COMPUTER ACCESS DOOR	1	
		ATTACHING PARTS		
- 14	AN394-25	• PIN, FLAT HEAD	1	
	AN381-2-8	• PIN, COTTER	1	
		¤----¤-¤-¤----¤		
- 15	A411	• • PIN ASSEMBLY (AVDE)	1	
- 16	RS108A60	• • CHAIN ASSY (RYY)	1	
- 17	MD46-15	• • ROD END (HEC)	1	
- 18	AN316-6R	• • NUT	1	
- 19	25-61066- 3	• • ADAPTER, ADJUSTABLE ROD END	1	
- 20	25-31350- 5	• • FILLER	1	
- 21	25-31350- 3	• • STRUT	1	
- 22	25-31351- 3	• FITTING, COMPUTER ACCESS DOOR STRUT SUPPORT	1	
		ATTACHING PARTS		
- 23	AN381-2-12	• PIN, COTTER	1	
	AN310C4	• NUT	1	
	4M36-02056	• WASHER (MDA)	2	
		¤----¤-¤-¤----¤		
- 24	25-31364- 49	• CHANNEL	1	
		ATTACHING PARTS		
	AN3-6A	• BOLT	2	
	AN960D10	• WASHER	4	
	AN365-1032	• NUT	2	
		¤----¤-¤-¤----¤		
- 25	25-31362- 1	• SUPPORT ASSEMBLY, PITOT MAST COMPUTER DOOR	1	
- 26	25-71246- 1	• FITTING ASSEMBLY, GUN CAMERA SUPPORT	1	
	4M34P8-23	• • BUSHING (MDA)	1	
	25-31059- 1	DOOR ASSEMBLY, EQUIPMENT COMPARTMENT ACCESS, SEE FIG. 45-57 FOR NEXT HIGHER ASSEMBLY	REF	A1-A7
	25-31059-301	DOOR ASSEMBLY, EQUIPMENT COMPARTMENT ACCESS, SEE FIG. 45-57 FOR NEXT HIGHER ASSEMBLY	REF	A8-F
- 27	W98292-3-.260	• STUD (MKL) USE WITH 99833P.130 RECEPTACLE (MKL)	2	A1-A7
	W98292-3-.330	• STUD (MKL) USE WITH 99833P.130 RECEPTACLE (MKL)	2	A8-F
- 28	99836	• PIN (MKL)	2	
- 29	25-31246- 5	• BUSHING, DOOR FASTENER SHEAR	2	A1-A7
	25-31246- 7	• BUSHING, DOOR FASTENER SHEAR	2	A8-F
- 30	W98292-2-.210	• STUD (MKL) USE WITH 99833P.130 RECEPTACLE (MKL)	4	A1-A7
	W98292-2-.240	• STUD (MKL) USE WITH 99833P.130 RECEPTACLE (MKL)	4	A8-F
	99836	• PIN (MKL) USE WITH INDEX 30	4	
	25-31246- 3	• BUSHING, DOOR FASTENER SHEAR, USE WITH INDEX 30	4	

SEE AN 01-245FC-3 FOR METHOD OF REPLACEMENT.

FIGURE & INDEX NUMBER	PART NUMBER	1 2 3 4 5 6 7 DESCRIPTION	UNITS PER ASS'Y	USABLE ON CODE
50 - 31	W98292-2-.220	• STUD (MKL) USE WITH 99833P.130 RECEPTACLE (MKL)	2	A1-A7
	W98292-3-.290	• STUD (MKL) USE WITH 99833P.130 RECEPTACLE (MKL)	2	A8-F
	99836	• PIN (MKL) USE WITH INDEX 31	2	
	25-31246- 3	• BUSHING, DOOR FASTENER SHEAR, USE WITH INDEX 31	2	A1-A7
	25-31246- 5	• BUSHING, DOOR FASTENER SHEAR, USE WITH INDEX 31	2	A8-F
- 32	W98292-2-.220	• STUD (MKL) USE WITH 25-31059-9 SPACER & 99833P.130 RECEPTACLE (MKL)	2	A1-A7
	W98292-2-.240	• STUD (MKL) USE WITH 99833P.130 RECEPTACLE (MKL)	2	A8-F
	99836	• PIN (MKL) USE WITH INDEX 32	2	
	25-31246- 3	• BUSHING, DOOR FASTENER SHEAR, USE WITH INDEX 32	2	
- 33	W98292-2-.220	• STUD (MKL) USE WITH 99833P.130 RECEPTACLE (MKL)	7	A1-A7
	W98292-2-.240	• STUD (MKL) USE WITH 99833P.130 RECEPTACLE (MKL)	7	A8-F
	99836	• PIN (MKL) USE WITH INDEX 33	7	
	25-31246- 3	• BUSHING, DOOR FASTENER SHEAR, USE WITH INDEX 33	7	
- 34	25-31059- 19	• PIN, HINGE, ALTERED FROM GOVT STD PART NUMBER AN253-2-1171	2	
- 35	25-31059- 17	• HINGE, HALF, ALTERED FROM GOVT STD PART NUMBER MS20001PY6-2292	1	
- 36	25-31059- 15	• HINGE, HALF, ALTERED FROM GOVT STD PART NUMBER MS20001PX6-2292	1	
- 37	25-31059- 13	• DOOR	1	

FIGURE & INDEX NUMBER	PART NUMBER	1 2 3 4 5 6 7 DESCRIPTION	UNITS PER ASS'Y	USABLE ON CODE
51 -	25-35001- 1	WINDSHIELD ASSEMBLY, SEE FIG. 45-1 FOR NEXT HIGHER ASSEMBLY	REF	
		ATTACHING PARTS		
- 1	AN3-4A	BOLT	10	
	AN960D10	WASHER	20	
- 2	AN3-4A	BOLT	2	
	AN960D10	WASHER	2	
- 3	AN4-10A	BOLT	2	
	AN960D416	WASHER	4	
	AN365-428	NUT	2	
- 4	AN3-7A	BOLT	6	
	AN960D10	WASHER	12	
	AN365-1032	NUT	6	
- 5	AN3-7A	BOLT	8	
	AN960D10	WASHER	8	
- 6	AN3-6A	BOLT	30	
	AN960D10	WASHER	30	
- 7	AN3-10A	BOLT	10	
	AN960D10	WASHER	30	
	AN365-1032	NUT	10	
- 8	AN4-11A	BOLT	2	
	AN960D416	WASHER	6	
	AN365-428	NUT	2	
- 9	AN4-11A	BOLT	2	
	AN960D416	WASHER	2	
- 10	AN3-10A	BOLT	2	
	AN960D10	WASHER	2	
- 11	AN4-7A	BOLT	4	
	AN960D416	WASHER	4	
	AN960D416L	WASHER	4	
- 12	AN3-6A	BOLT, LEFT SIDE	1	
	AN960D10	WASHER	1	
- 13	AN3-10A	BOLT	8	
	AN960D10	WASHER	16	
	AN960D10L	WASHER	8	
	AN365-1032	NUT	8	
- 14	AN4-10A	BOLT, SEE FIG. 86-1	REF	
	AN960-416L	WASHER	REF	
- 15	AN509-10R13	SCREW, LEFT SIDE	1	
	AN960D10	WASHER	1	
	AN365-1032	NUT	1	
- 16	AN3-6A	BOLT, RIGHT SIDE	4	
	AN960D10	WASHER	4	
- 17	AN4-11A	BOLT	2	
	AN960D416	WASHER	6	
	AN365-428	NUT	2	
- 18	AN3-7A	BOLT	2	
	AN960D10	WASHER	4	
	AN960D10L	WASHER	2	
	AN365-1032	NUT	2	
- 19	AN3-6A	BOLT	2	
	AN960D10	WASHER	6	
	AN365-1032	NUT	2	
- 20	AN3-5A	BOLT	6	
	AN960D10	WASHER	6	
	AN960D10L	WASHER	6	
	AN365-1032	NUT	6	
- 21	AN4-12A	BOLT	REF	
	AN960D416	WASHER	REF	
	AN365-428	NUT	REF	
		¤----¤-¤-¤----¤		
- 22	25-35025- 9	• DUCT ASSEMBLY, WINDSHIELD DEFOGGING LH	1	
- 23	25-35025- 10	• DUCT ASSEMBLY, WINDSHIELD DEFOGGING RH	1	
- 24	25-35095- 3	• CLIP, DEFOGGING DUCT SUPPORT	6	
- 25	25-35025- 7	• DUCT, WINDSHIELD DEFOGGING	1	
- 26	AN742D16	• CLAMP	3	
- 27	25-35006- 3	• FRAME ASSEMBLY, WINDSHIELD LEFT SIDE	1	
- 28	25-35006- 5	• FRAME ASSEMBLY, WINDSHIELD RIGHT SIDE	1	
		ATTACHING PARTS		
- 29	NAS229-18	• SCREW	64	
	AN960D10	• WASHER	64	
	201AC10	• WASHER, LOCK-O-SEAL (WFRC)	64	
	AN364-1032	• NUT	64	
		¤----¤-¤-¤----¤		
- 30	25-35001- 11	• SEAL	1	
- 31	25-35009- 1	• BULKHEAD ASSEMBLY, WINDSHIELD FORWARD	1	A-B
	25-35103- 1	• BULKHEAD ASSEMBLY, WINDSHIELD FORWARD	1	C-F

Forward Fuselage

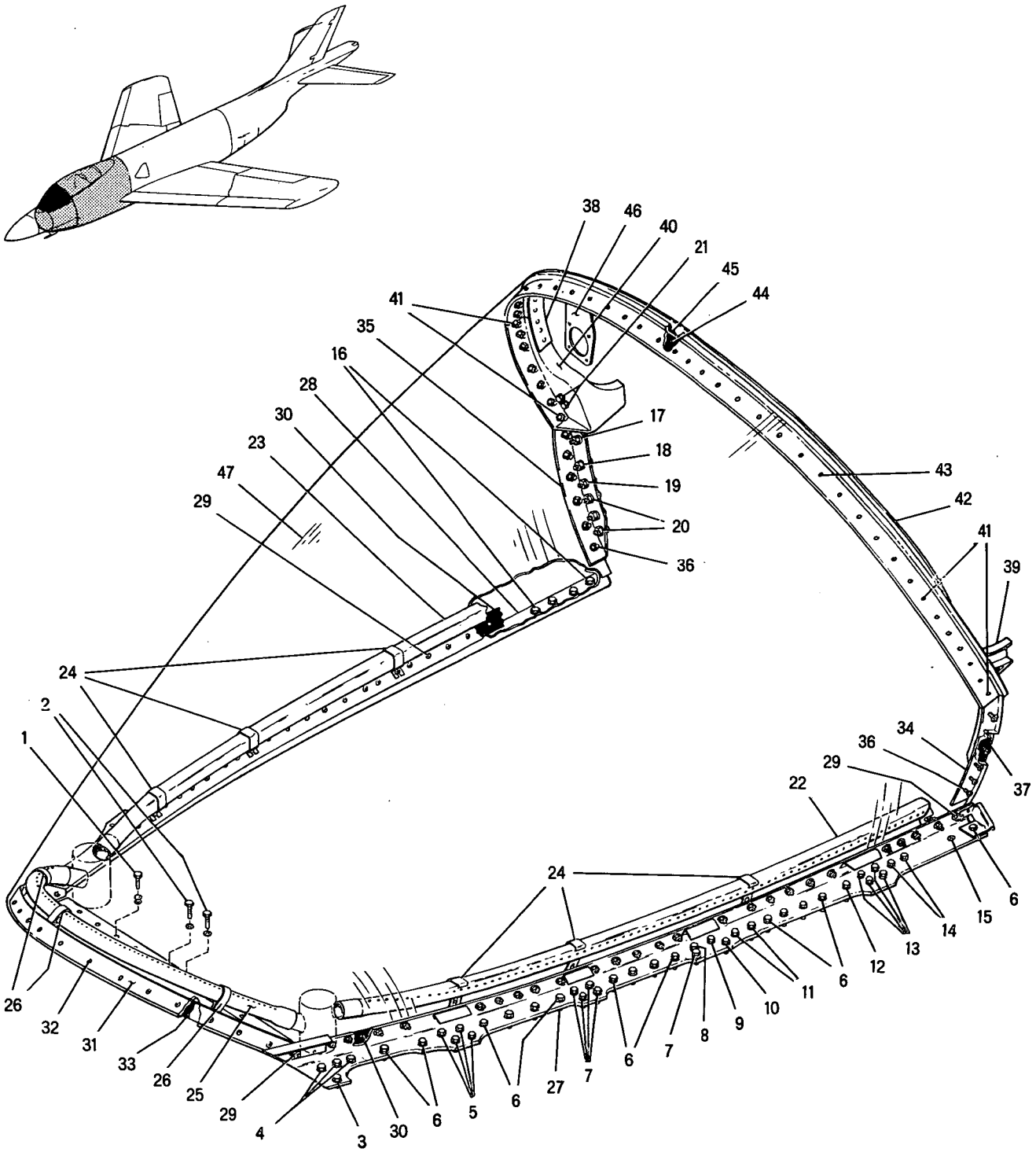

PC25-53

Figure 51 -- Windshield Assembly

FIGURE & INDEX NUMBER	PART NUMBER	1 2 3 4 5 6 7 DESCRIPTION	UNITS PER ASS'Y	USABLE ON CODE
51 -		ATTACHING PARTS		
- 32	AN509-10R16	• SCREW	16	
	AN960D10	• WASHER	16	
	201AC10	• WASHER, LOCK-O-SEAL (WFRC)	16	
	AN364-1032	• NUT	16	
		¤----¤-¤-¤----¤		
- 33	25-35001- 7	• SEAL	1	
- 34	25-35098- 3	• FITTING, WINDSHIELD SPLICE AFT LH	1	
- 35	25-35098- 4	• FITTING, WINDSHIELD SPLICE AFT RH	1	
		ATTACHING PARTS		
- 36	AN509-10R17	• SCREW	12	
	AN960D10	• WASHER	12	
	201AC10	• WASHER, LOCK-O-SEAL (WFRC)	12	
	AN364-1032	• NUT	12	
		¤----¤-¤-¤----¤		
- 37	25-35001- 9	• SEAL	2	
	25-35096- 3	• PLATE, WINDSHIELD ARCH SPLICE LH	1	
- 38	25-35096- 4	• PLATE, WINDSHIELD ARCH SPLICE RH	1	
- 39	25-35057- 3	• FITTING, SEAL RETAINER FORWARD LH	1	
- 40	25-35057- 4	• FITTING, SEAL RETAINER FORWARD RH	1	
		ATTACHING PARTS		
- 41	AN509P10R20	• SCREW	14	
	AN960D10	• WASHER	14	
	201AC10	• WASHER, LOCK-O-SEAL (WFRC)	14	
	AN364B1032	• NUT	14	
		¤----¤-¤-¤----¤		
- 42	25-35008- 5	∘ ARCH, WINDSHIELD	1	
		ATTACHING PARTS		
- 43	AN509P10R17	• SCREW	27	
	AN960D10	• WASHER	27	
	201AC10	• WASHER, LOCK-O-SEAL (WFRC)	27	
	AN364B1032	• NUT	27	
		¤----¤-¤-¤----¤		
- 44	25-35001- 5	• SEAL	1	
- 45	25-35001- 13	• SEAL	1	
- 46	25-35092- 1	• BRACKET ASSEMBLY, STAND-BY COMPASS SUPPORT	1	
- 47	25-35001- 3	∘ GLASS ASSY, WINDSHIELD, MAKE FROM 25-35007-1	1	

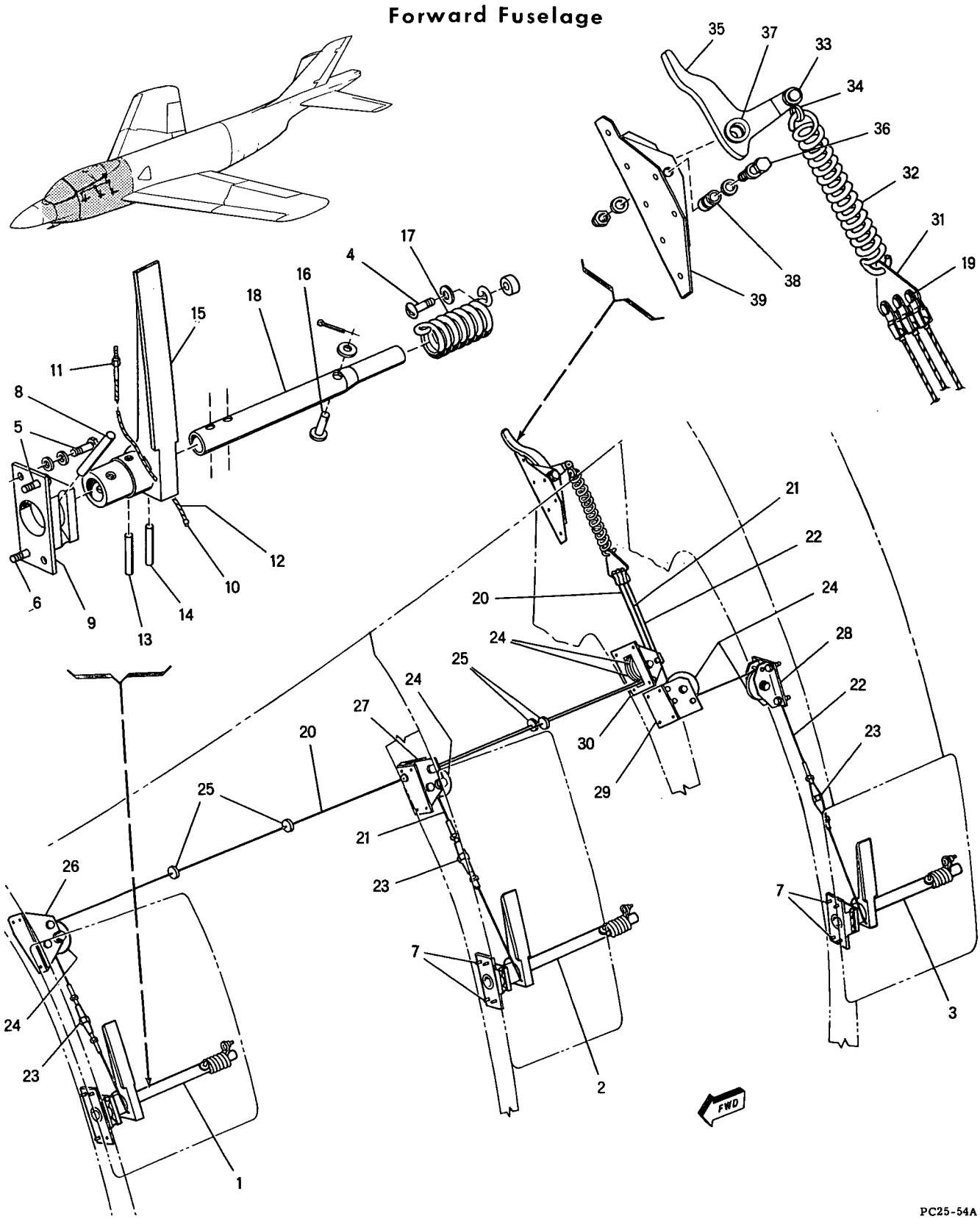

Figure 52 -- Cockpit Access Step Installation

FIGURE & INDEX NUMBER	PART NUMBER	1 2 3 4 5 6 7 DESCRIPTION	UNITS PER ASS'Y	USABLE ON CODE
52 -	25-31074- 1	STEP INSTL, COCKPIT ACCESS, SEE FIG. 44-3 FOR NEXT HIGHER ASSY	REF	
- 1	25-31075- 1	. STEP ASSEMBLY, COCKPIT ACCESS FORWARD	1	
- 2	25-31075- 7	. STEP ASSEMBLY, COCKPIT ACCESS CENTER	1	
- 3	25-31075- 3	. STEP ASSEMBLY, COCKPIT ACCESS AFT	1	
		ATTACHING PARTS		
- 4	NAS229-11	. SCREW	3	
	AN960D10L	. WASHER	3	
	NAS43DD3-9	. SPACER	3	
- 5	AN3-5A	. BOLT, FORWARD	2	
	AN960D10	. WASHER, FORWARD	4	
- 6	AN4-5A	. BOLT, FORWARD	1	
	AN960D416	. WASHER, FORWARD	1	
- 7	AN3-5A	. BOLT, CENTER & AFT	8	
	AN960D10	. WASHER, CENTER & AFT	16	
		¤----¤-¤-¤----¤		
- 8	52-062-312-1500	. . PIN, ROLL (EN)	1	
- 9	25-31106- 5	. . FLANGE, COCKPIT ACCESS STEP RETAINING	1	25-31075-1
	25-31106- 7	. . FLANGE, COCKPIT ACCESS STEP RETAINING	1	25-31075-7
	25-31106- 3	. . FLANGE, COCKPIT ACCESS STEP RETAINING	1	25-31075-3
- 10	AN664C2	. . TERMINAL	1	
	25-31075- 5	. . CABLE ASSEMBLY	1	
- 11	AN666-2LH	. . . TERMINAL	1	
- 12	25-31075- 9	. . . CABLE	1	
- 13	52-032-156-1250	. . PIN, ROLL (EN)	1	
- 14	52-032-156-1500	. . PIN, ROLL (EN)	1	
- 15	25-31078- 3	. . STEP, COCKPIT ACCESS	1	
- 16	AN393-31	. . PIN, FLAT HEAD	1	
	AN960-10	. . WASHER	1	
	AN380-2-1	. . PIN, COTTER	1	
- 17	25-31077- 3	. . SPRING, COCKPIT ACCESS STEP TORSION	1	
- 18	25-31076- 3	. . TUBE, COCKPIT ACCESS STEP	1	25-31075-1
	25-31076- 5	. . TUBE, COCKPIT ACCESS STEP	1	25-31075-7 & -3
- 19	AN393-7	. PIN, FLAT HEAD	3	
	AN960D10L	. WASHER	3	
	AN380-2-2	. PIN, COTTER	3	
- 20	NAS312-20-	. CABLE ASSEMBLY, COCKPIT ACCESS STEP FORWARD	1	
- 21	NAS312-20-	. CABLE ASSEMBLY, COCKPIT ACCESS STEP CENTER	1	
- 22	NAS312-20-	. CABLE ASSEMBLY, COCKPIT ACCESS STEP AFT	1	
- 23	AN155-8S	. BARREL, TURNBUCKLE	3	
- 24	AN219-2	. PULLEY	6	
- 25	1DRE1409	. BUSHING (FN)	4	
- 26	25-31109- 3	. BRACKET, COCKPIT ACCESS STEP PULLEY	1	
- 27	25-31129- 3	. BRACKET, COCKPIT ACCESS STEP PULLEY	1	
- 28	25-31130- 3	. BRACKET, COCKPIT ACCESS STEP PULLEY	1	
- 29	25-31176- 3	. BRACKET, COCKPIT ACCESS STEP LOWER PULLEY	1	
- 30	25-31177- 3	. BRACKET, COCKPIT ACCESS STEP UPPER PULLEY	1	
- 31	25-31180- 3	. PLATE, COCKPIT ACCESS STEP CABLE	1	
- 32	25-31181- 3	. SPRING, COCKPIT ACCESS STEP EXTENSION	1	
- 33	AN393-11	. PIN, FLAT HEAD	1	
	AN960D10L	. WASHER	1	
	AN380-2-2	. PIN, COTTER	1	
- 34	AN115-16	. SHACKLE, CABLE	1	
- 35	25-31179- 1	. LEVER ASSEMBLY, COCKPIT ACCESS STEP ACTUATING	1	
		ATTACHING PARTS		
- 36	AN4-11A	. BOLT	1	
	AN960D416L	. WASHER	1	
	AN960D416	. WASHER	2	
	AN365-428	. NUT	1	
		¤----¤-¤-¤----¤		
- 37	4M34P7-14	. . BUSHING (MDA)	2	
- 38	NAS72-4-007	. BUSHING	1	
- 39	25-31178- 3	. BRACKET, COCKPIT ACCESS STEP ACTUATING LEVER	1	

Forward Fuselage

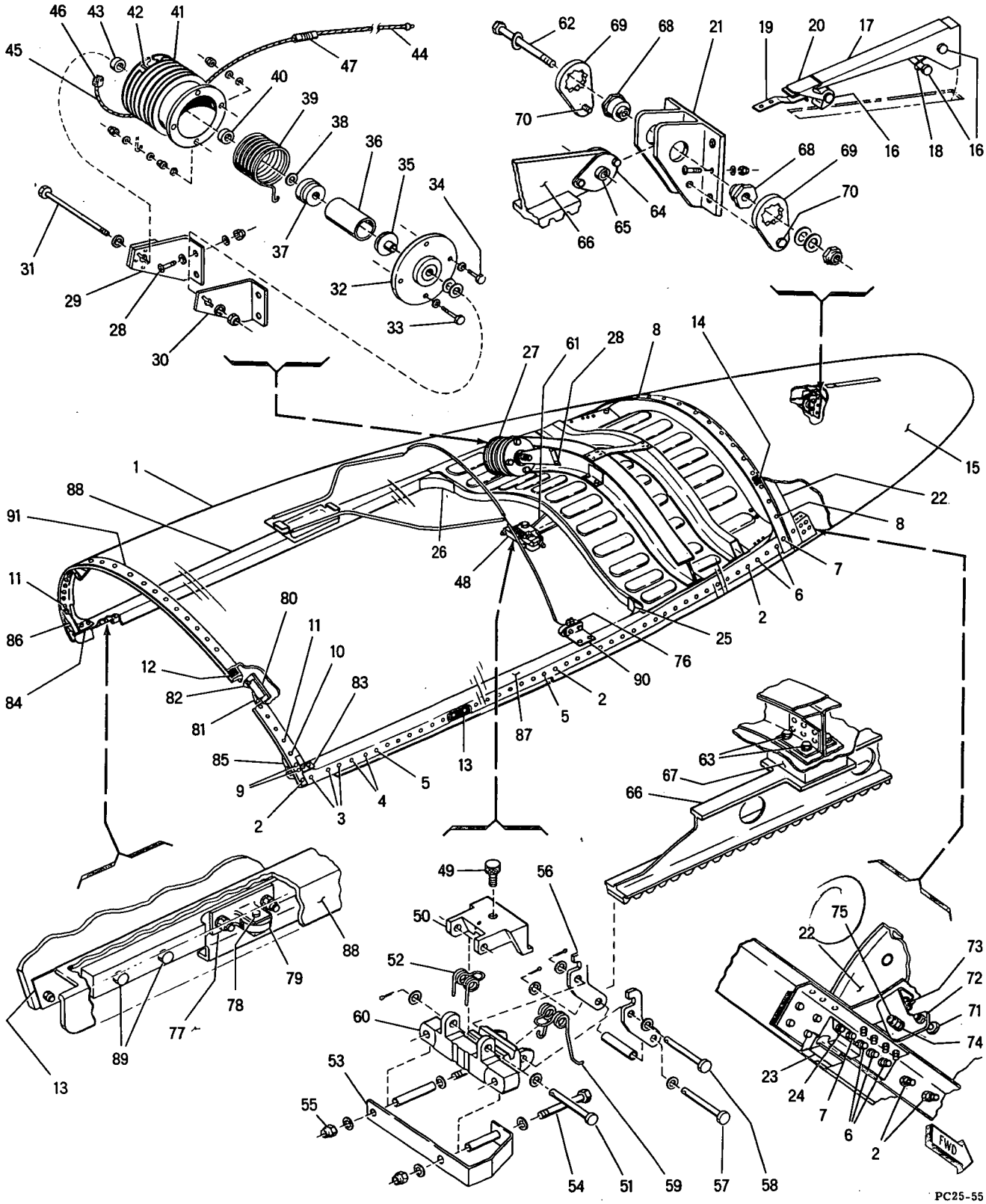

Figure 53 - Canopy Assembly

FIGURE & INDEX NUMBER	PART NUMBER	1 2 3 4 5 6 7 DESCRIPTION	UNITS PER ASS'Y	USABLE ON CODE
53 -	25-35002- 1	CANOPY ASSY, SEE FIG. 44-1 FOR NEXT HIGHER ASSY	REF	
- 1	25-35002- 9	• GLASS ASSY, CANOPY, MAKE FROM 25-35010-1	1	
		ATTACHING PARTS		
- 2	AN509-10R16	• SCREW	40	
	AN960D10	• WASHER	40	
	AN365-1032	• NUT	40	
- 3	AN509-416R23	• SCREW	6	
	AN960D416	• WASHER	6	
	AN365-428	• NUT	6	
- 4	AN509-416R21	• SCREW	4	
	AN960D416	• WASHER	4	
	AN365-428	• NUT	4	
- 5	AN509-416R20	• SCREW	32	
	AN960D416	• WASHER	64	
	AN365-428	• NUT	32	
- 6	AN509-10R19	• SCREW	6	
	AN960D10	• WASHER	6	
	AN365-1032	• NUT	6	
- 7	AN509-416R26	• SCREW	2	
	AN960D416	• WASHER	2	
	AN365-428	• NUT	2	
- 8	AN509-10R16	• SCREW	21	
- 9	AN509-10R19	• SCREW	4	
	AN960D10	• WASHER	8	
	AN365-1032	• NUT	4	
- 10	AN509-10R12	• SCREW	2	
	52-1650-02	• NUT, FLUSH (EN)	2	
- 11	AN509P10R8	• SCREW	31	
	B92-1650-02	• NUT, FLUSH (EN)	31	
	B92-1650-02	• NUT, FLUSH (EN)	31	
		¤----¤-¤-¤----¤		
- 12	25-35002- 3	• SEAL	1	
- 13	25-35002- 5	• SEAL	2	
- 14	25-35002- 7	• SEAL	1	
- 15	25-35014- 1	• FAIRING ASSEMBLY, CANOPY TAIL	1	
- 16	AN394-31	• • PIN, FLAT HEAD	3	
	AN960D416	• • WASHER	3	
	AN381-2-10	• • PIN, COTTER	3	
- 17	25-35029- 3	• • HANDLE, CANOPY EXTERNAL	1	
- 18	25-35061- 3	• • SPRING, CANOPY EXTERNAL HANDLE	1	
- 19	25-35090- 3	• • SPRING, CANOPY HANDLE LATCH	1	
- 20	25-35046- 3	• • LATCH, CANOPY EMERGENCY EXTERNAL HANDLE	1	
- 21	25-35059- 1	• • BRACKET ASSEMBLY, RACK ATTACH	1	
- 22	25-35063- 3	• • FITTING, CANOPY BULKHEAD	1	
- 23	25-35066- 7	• FITTING, CANOPY RETAINING AFT LH	1	
	25-35066- 8	• FITTING, CANOPY RETAINING AFT RH	1	
		ATTACHING PARTS		
- 24	AN509-416R28	• SCREW	2	
	AN960D416	• WASHER	2	
	AN365-428	• NUT	2	
		¤----¤-¤-¤----¤		
	25-35013- 3	• CHANNEL INSTALLATION, CANOPY DIAPHRAGM	1	
- 25	25-35035- 3	• • BLOCK, AFT SEAL RADIUS LH	1	
- 26	25-35035- 4	• • BLOCK, AFT SEAL RADIUS RH	1	
		ATTACHING PARTS		
	NAS229-8	• • SCREW	4	
	AN960D10L	• • WASHER	4	
	AN364-1032	• • NUT	4	
		¤----¤-¤-¤----¤		
- 27	25-35073- 1	• REEL ASSEMBLY, CANNON SAFETY PIN	1	
		ATTACHING PARTS		
- 28	NAS229-11	• SCREW	4	
	AN960D10	• WASHER	8	
	AN365-1032	• NUT	4	
		¤----¤-¤-¤----¤		
- 29	25-35071- 1	• • BRACKET ASSEMBLY, SAFETY PIN REEL	1	
- 30	25-35071- 3	• • BRACKET ASSEMBLY, SAFETY PIN REEL	1	
- 31	AN4-51A	• • BOLT	1	
	AN960D416	• • WASHER	2	
	AN960D816	• • WASHER	AR	
	AN960D816L	• • WASHER	AR	
	AN365-428	• • NUT	1	
- 32	15-80289	• • PLATE ASSEMBLY, CANOPY SAFETY PIN REEL	1	

FIGURE & INDEX NUMBER	PART NUMBER	1 2 3 4 5 6 7 DESCRIPTION	UNITS PER ASS'Y	USABLE ON CODE
53 -		ATTACHING PARTS		
- 33	AN3-11A	• • BOLT	1	
	AN960D10	• • WASHER	2	
	NAS43-3-12	• • SPACER	1	
	AN960-10	• • WASHER	2	
	AN365-1032	• • NUT	1	
- 34	AN3-6A	• • BOLT	3	
	AN960D10	• • WASHER	9	
	AN365-1032	• • NUT	3	
		¤----¤-¤-¤----¤		
	AN201KP8A	• • • BEARING	1	
- 35	15-80333	• • END, SAFETY PIN AXLE LEFT	1	
- 36	15-80332	• • TUBE, SAFETY PIN AXLE	1	
- 37	15-80334	• • END, SAFETY PIN AXLE RIGHT	1	
- 38	AN960D816	• • WASHER	1	
- 39	15-80306	• • SPRING, CANNON SAFETY PIN REEL	1	
- 40	15-80337	• • SPACER, SAFETY PIN REEL	1	
- 41	15-80290-301	• • DRUM ASSEMBLY, CANNON SAFETY PIN REEL	1	
	AN201KP8A	• • • BEARING	1	
- 42	52-032-156-0562	• • PIN, ROLL (EN)	1	
- 43	NAS43-8-9	• • SPACER	1	
	25-35091- 1	• • CABLE ASSEMBLY, EJECTION SEAT REEL	1	
- 44	25-35091- 3	• • • CABLE ASSEMBLY	1	
- 45	25-35091- 11	• • • CABLE ASSEMBLY	1	
- 46	RA2500-3	• • • • TERMINAL, TRU-LOCK (ACA)	1	
- 47	RA2258-3	• • • DISCONNECT, TRU-LOCK (ACA)	1	
- 48	25-35032- 1	• STOP ASSEMBLY, CANOPY MECHANISM	1	
- 49	15-35496- 3	• • SCREW, CANOPY STOP THUMB	1	
- 50	25-35042- 1	• • HINGE ASSEMBLY, CANOPY STOP	1	
		ATTACHING PARTS		
- 51	AN394-59	• • PIN, FLAT HEAD	1	
	AN960-416L	• • WASHER	1	
	AN380-2-2	• • PIN, COTTER	1	
		¤----¤-¤-¤----¤		
- 52	25-35049- 3	• • SPRING, CANOPY STOP HINGE	1	
- 53	15-35579- 3	• • CAM, CANOPY AFT LIMIT SWITCH	1	
		ATTACHING PARTS		
- 54	AN4-24A	• • BOLT	1	
	AN960-416L	• • WASHER	1	
	AN960-416	• • WASHER	1	
	NAS43-4-87	• • SPACER	1	
	AN365-428	• • NUT	1	
- 55	AN4-25A	• • BOLT	1	
	AN960-416L	• • WASHER	1	
	AN960-416	• • WASHER	1	
	NAS43-4-91	• • SPACER	1	
	AN365-428	• • NUT	1	
		¤----¤-¤-¤----¤		
- 56	25-35043- 3	• • HOOK, CANOPY STOP	2	
		ATTACHING PARTS		
- 57	AN394-61	• • PIN, FLAT HEAD	1	
	NAS43-4-87	• • SPACER	1	
	AN960-416L	• • WASHER	2	
	AN380-2-2	• • PIN, COTTER	1	
- 58	AN394-61	• • PIN, FLAT HEAD	1	
	AN960-416L	• • WASHER	2	
	AN380-2-2	• • PIN, COTTER	1	
		¤----¤-¤-¤----¤		
- 59	25-35030- 3	• • SPRING, CANOPY STOP HOOK	1	
- 60	25-35041- 3	• • BODY, CANOPY STOP	1	
- 61	25-35015- 1	• RACK ASSEMBLY, CANOPY	1	
		ATTACHING PARTS		
- 62	AN5-20A	• BOLT	1	
	AN960-516L	• WASHER	1	
	AN960-516	• WASHER	2	
	AN365-524	• NUT	1	
- 63	AN4-15A	• BOLT	4	
	AN960D416L	• WASHER	4	
	AN960-416	• WASHER	4	
	AN365-428	• NUT	4	
		¤----¤-¤-¤----¤		
- 64	19-35182- 3	• • RETAINER, CANOPY MECHANISM	2	
- 65	BLR5000	∘ ∘ BEARING (SWPC)	1	

FIGURE & INDEX NUMBER	PART NUMBER	1 2 3 4 5 6 7 DESCRIPTION	UNITS PER ASS'Y	USABLE ON CODE
53 - 66	361072	• • SPUR ASSEMBLY, RACK (FBG) MCDONNELL SPEC 15-35327-13	1	
- 67	25-35058- 3	• BLOCK, CANOPY RACK SPACER	1	
- 68	25-35070- 3	• BUSHING, ECCENTRIC CANOPY ADJUSTMENT	2	
- 69	15-35569- 3	• RETAINER, CANOPY ADJUSTMENT BUSHING	2	
		ATTACHING PARTS		
- 70	AN3-4A	• BOLT	2	
		¤-----¤-¤-¤-----¤		
- 71	3M6-3-20	• BOLT (MDA)	1	
	AN315-3R	• NUT	2	
- 72	25-35093- 1	• FITTING ASSEMBLY, COCKPIT ACCESS STEP ACTUATOR	1	
		ATTACHING PARTS		
- 73	NAS229-15	• SCREW	2	
	AN960D10L	• WASHER	2	
	AN960D10	• WASHER	2	
	AN365-1032	• NUT	2	
		¤-----¤-¤-¤-----¤		
- 74	25-35094- 3	• • BUSHING, COCKPIT ACCESS STEP ACTUATOR	1	
- 75	25-35102- 3	• STUD, COCKPIT ACCESS STEP ACTUATOR ADJUSTMENT	1	
	AN960D516	• WASHER	1	
	AN316-5R	• NUT	1	
- 76	25-76094- 1	• CONTACT ASSEMBLY, ARN/6 SENSE ANTENNA	1	
	25-76099- 3	• • STRIP, ANTENNA CONTACT	1	
	25-76100- 3	• • BLOCK, ANTENNA CONTACT MOUNTING	1	
- 77	25-35072- 1	• FITTING ASSEMBLY, CANOPY SIDE ROLLER	2	
- 78	79-040-187-0500	• • PIN, ROLL (EN)	1	
- 79	FT3	• • ROLLER, TRACK (TOR)	1	
- 80	P1120	• MIRROR, REAR VISION, TYPE 826V-NM-R (LMW)	2	
		ATTACHING PARTS		
	NAS229BZP9	• SCREW	4	
	AN960D10	• WASHER	8	
	AN365B1032	• NUT	4	
		¤-----¤-¤-¤-----¤		
- 81	25-35065- 3	• BRACKET, CANOPY REAR VISION MIRROR LH	2	
- 82	25-35065- 4	• BRACKET, CANOPY REAR VISION MIRROR RH	2	
- 83	25-35027- 3	• FITTING, CANOPY RETAINING FEMALE LH	1	
- 84	25-35027- 4	• FITTING, CANOPY RETAINING FEMALE RH	1	
- 85	25-35044- 5	• FITTING, SEAL RADIUS FORWARD LH	1	
- 86	25-35044- 6	• FITTING, SEAL RADIUS FORWARD RH	1	
- 87	25-35012- 1	• FRAME ASSEMBLY, CANOPY SIDE LH	1	
- 88	25-35012- 2	• FRAME ASSEMBLY, CANOPY SIDE RH	1	
- 89	CTA9-1	• • FOLLOWER, CAM (SBCI)	2	
	AN960-416L	• • WASHER	4	
	AN320-4	• • NUT	2	
	AN381-2-10	• • PIN, COTTER	2	
- 90	25-35012- 11	• • CLIP, LEFT SIDE ONLY	1	
- 91	25-35008- 3	• ARCH, CANOPY	1	

Forward Fuselage

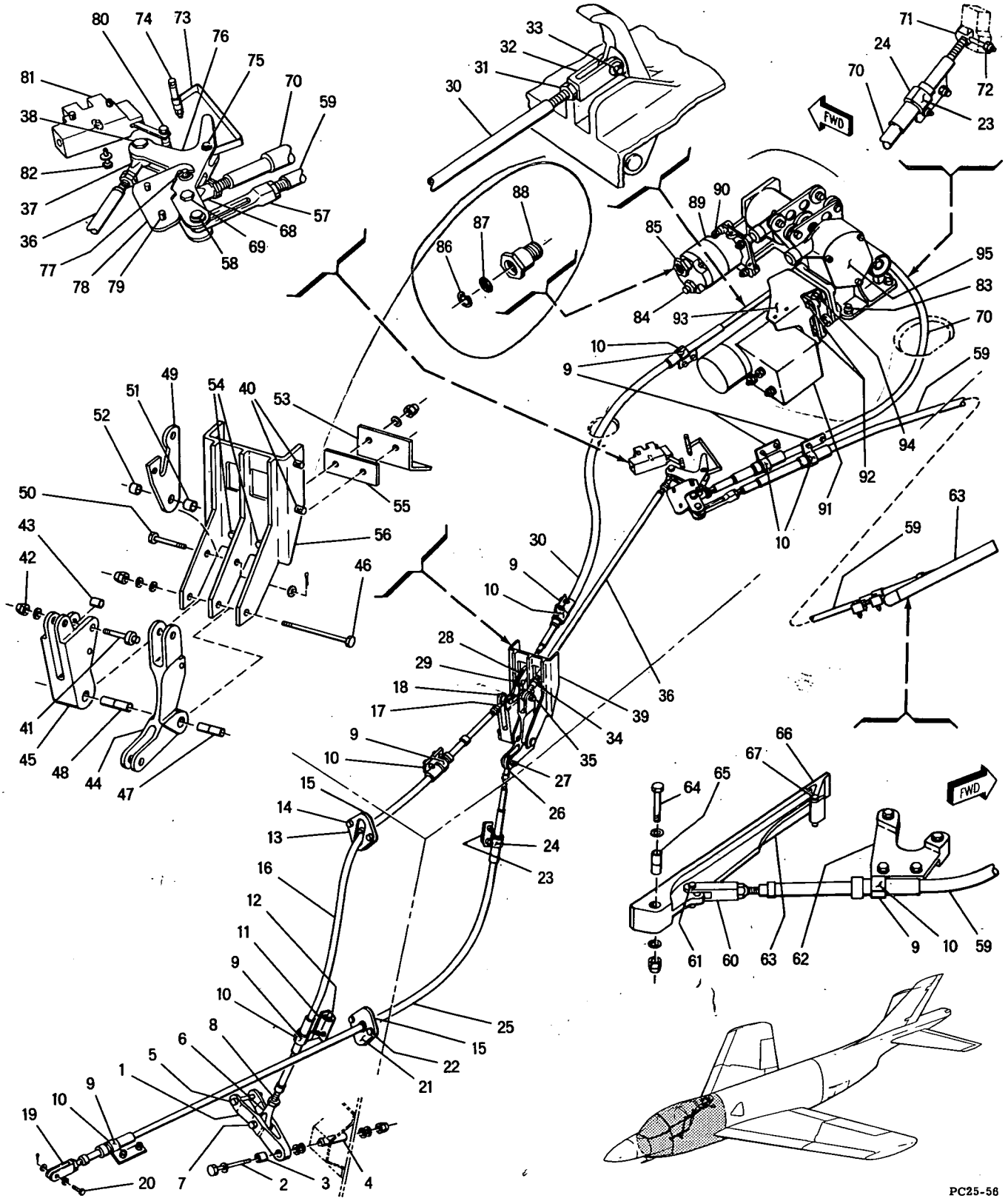

Figure 54 -- Canopy Emergency Controls Installation

FIGURE & INDEX NUMBER	PART NUMBER	1 2 3 4 5 6 7 DESCRIPTION	UNITS PER ASS'Y	USABLE ON CODE
54 -	25-35003- 1	CONTROLS INSTALLATION, CANOPY EMERGENCY, SEE FIG. 44-9 FOR NEXT HIGHER ASSEMBLY	REF	
- 1	25-35019- 3	• LEVER, CANOPY JETTISON DISCONNECT	1	
		ATTACHING PARTS		
- 2	AN6-26A	• BOLT	1	
	AN960-616	• WASHER	3	
	201AC3/8	• LOCK O SEAL(WFRC)	1	
	AN960D616	• WASHER	1	
	AN365-624	• NUT	1	
		¤----¤-¤-¤----¤		
- 3	NAS72-6-009	• BUSHING	1	
- 4	NAS43-6-77	• SPACER	1	
- 5	AN393-43	• PIN, FLAT HEAD	1	
	AN960D10L	• WASHER	2	
	NAS43-3-61	• SPACER	1	
	AN380-2-1	• PIN, COTTER	1	
- 6	25-35087- 3	• ROD END, CANOPY EMERGENCY CONTROLS, ALTERED FROM HFL3 (HEC)	1	
		ATTACHING PARTS		
- 7	AN3-14A	• BOLT	1	
	AN960D10	• WASHER	2	
	AN365-1032	• NUT	1	
		¤----¤-¤-¤----¤		
- 8	AN315-3L	• NUT	1	
- 9	15-35474- 3	• CLAMP, CANOPY EMERGENCY CONTROLS LH	8	
- 10	15-35474- 4	• CLAMP, CANOPY EMERGENCY CONTROLS RH	8	
- 11	25-35101- 3	• CLIP, CANOPY JETTISON CONTROLS CABLE	1	
		ATTACHING PARTS		
- 12	AN3-7A	• BOLT, UPPER	1	
	AN960D10	• WASHER	2	
	201AC10	• LOCK O SEAL (WFRC)	1	
	AN365-1032	• NUT	1	
	AN3-6A	• BOLT, LOWER	1	
	AN960D10L	• WASHER	1	
	201AC10	• LOCK O SEAL (WFRC)	1	
	AN960D10	• WASHER	1	
	AN365-1032	• NUT	1	
		¤----¤-¤-¤----¤		
- 13	25-35036- 5	• PLATE, CANOPY EMERGENCY CONTROLS CABLE SEAL	1	
		ATTACHING PARTS		
- 14	AN3-6A	• BOLT	2	
	AN960D10	• WASHER	4	
		¤----¤-¤-¤----¤		
- 15	25-35082- 3	• SEAL, CANOPY EMERGENCY CONTROLS	2	
- 16	SA4188-2	• CABLE ASSEMBLY, PUSH-PULL (ACA)	1	
	AN365-1032	• NUT, USE WITH INDEX 16	1	
- 17	HF3	• ROD END, UNIBAL (HEC)	1	
		ATTACHING PARTS		
- 18	AN3-7A	• BOLT	1	
	AN960D10L	• WASHER	1	
	AN960D10	• WASHER	1	
	AN365-1032	• NUT	1	
		¤----¤-¤-¤----¤		
- 19	25-35080- 3	• CLEVIS, CANOPY EXTERNAL HANDLE	1	
		ATTACHING PARTS		
- 20	AN393-15	• PIN, FLAT HEAD	1	
	AN960D10L	• WASHER	2	
	AN380-2-1	• PIN, COTTER	1	
		¤----¤-¤-¤----¤		
	AN365-1032	• NUT, USE WITH INDEX 19	1	
- 21	25-35036- 3	• PLATE, CANOPY EMERGENCY CONTROLS CABLE SEAL	1	
		ATTACHING PARTS		
- 22	AN3-7A	• BOLT	2	
	AN960D10	• WASHER	4	
		¤----¤-¤-¤----¤		
- 23	23-35083- 3	• CLAMP, CANOPY EMERGENCY CONTROLS LH	2	
- 24	23-35083- 4	• CLAMP, CANOPY EMERGENCY CONTROLS RH	2	
- 25	SA4187-2	• CABLE ASSEMBLY, PUSH-PULL (ACA)	1	A-B
	SA4187-3	• CABLE ASSEMBLY, PUSH-PULL (ACA)	1	C-F
	AN315-3L	• NUT, USE WITH INDEX 25	1	
- 26	25-35087- 3	• ROD END, CANOPY EMERGENCY CONTROLS, ALTERED FROM HFL3 (HEC)	1	

FIGURE & INDEX NUMBER	PART NUMBER	1 2 3 4 5 6 7 DESCRIPTION	UNITS PER ASS'Y	USABLE ON CODE
54 -		ATTACHING PARTS		
- 27	AN3-7A	• BOLT	1	
	AN960D10L	• WASHER	1	
	AN960D10	• WASHER	1	
	AN365-1032	• NUT	1	
		¤----¤-¤-¤----¤		
- 28	25-35038- 5	• CLEVIS, CANOPY EMERGENCY CONTROLS	1	
		ATTACHING PARTS		
- 29	AN393-17	• PIN, FLAT HEAD	1	
	AN960D10	• WASHER	1	
	AN380-2-1	• PIN, COTTER	1	
		¤----¤-¤-¤----¤		
	AN365-1032	• NUT, USE WITH INDEX 28	1	
- 30	SA4188-1	• CABLE ASSEMBLY, PUSH-PULL (ACA)	1	
- 31	AN315-3L	• NUT	1	
- 32	25-35038- 3	• CLEVIS, CANOPY EMERGENCY CONTROLS	1	
		ATTACHING PARTS		
- 33	AN393-17	• PIN, FLAT HEAD	1	
	AN960D10L	• WASHER	4	
	AN380-2-1	• PIN, COTTER	1	
		¤----¤-¤-¤----¤		
- 34	HF4	• ROD END, UNIBAL (HEC)	1	
		ATTACHING PARTS		
- 35	AN4-10A	• BOLT	1	
	AN960D416L	• WASHER	1	
	AN960D416	• WASHER	1	
	AN364-428	• NUT	1	
		¤----¤-¤-¤----¤		
	AN365-428	• NUT, USE WITH INDEX 34	1	
- 36	25-35085-301	• ROD ASSEMBLY, CANOPY EMERGENCY CONTROLS	1	
	AN315-4L	• NUT, USE WITH INDEX 36	1	
- 37	25-35088- 3	• ROD END, CANOPY CONTROLS, ALTERED FROM HFL4 (HEC)	1	
		ATTACHING PARTS		
- 38	AN4-11A	• BOLT	1	
	AN960D416L	• WASHER	1	
	AN960D416	• WASHER	1	
	AN365-428	• NUT	1	
		¤----¤-¤-¤----¤		
- 39	25-35022- 1	• MECHANISM ASSY, CANOPY EMER CONTROLS SEQUENCE	1	
		ATTACHING PARTS		
- 40	AN3-5A	• BOLT	4	
	AN960D10	• WASHER	8	
		¤----¤-¤-¤----¤		
- 41	25-35034- 3	• • PIN, CANOPY EMER CONTROLS SEQUENCE MECH	1	
		ATTACHING PARTS		
- 42	AN365-428	• • NUT	1	
	AN960D416	• • WASHER	1	
- 43	NAS43-4-20	• • SPACER	1	
		¤----¤-¤-¤----¤		
- 44	25-35024- 3	• • LEVER, CANOPY EMER CONTROLS SEQUENCE MECH	1	
- 45	25-35037- 3	• • LEVER, CANOPY EMER CONTROLS SEQUENCE MECH	1	
		ATTACHING PARTS		
- 46	AN4-23A	• • BOLT	1	
	AN960D416	• • WASHER	2	
	AN365-428	• • NUT	1	
		¤----¤-¤-¤----¤		
- 47	NAS72-4-011	• • BUSHING	1	
- 48	NAS72-4-013	• • BUSHING	1	
- 49	25-35028- 3	• • CAM, CANOPY EMER CONTROLS SEQUENCE MECH	1	
		ATTACHING PARTS		
- 50	AN394-35	• • PIN, FLAT HEAD	1	
	AN960D416L	• • WASHER	1	
	AN380-2-2	• • PIN, COTTER	1	
		¤----¤-¤-¤----¤		
- 51	4M34-5-27	• • SPACER (MDA)	1	
- 52	4M34-5-23	• • SPACER (MDA)	1	
- 53	25-35017- 5	• • CLIP, CANOPY EMER CONTROLS SEQUENCE MECH	1	

FIGURE & INDEX NUMBER	PART NUMBER	1 2 3 4 5 6 7 DESCRIPTION	UNITS PER ASS'Y	USABLE ON CODE
54 -		ATTACHING PARTS		
- 54	AN3-7A	• • BOLT	2	
	AN960D10	• • WASHER	2	
	AN365-1032	• • NUT	2	
		¤----¤-¤-¤-----¤		
- 55	25-35021- 3	• • SHIM, CANOPY EMER CONTROLS SEQUENCE MECH	1	
- 56	25-35023- 3	• • BRACKET, CANOPY EMER CONTROLS SEQUENCE MECH	1	
- 57	25-35048- 3	• CLEVIS, CANOPY EMERGENCY CONTROLS	1	
		ATTACHING PARTS		
- 58	AN393-19	• PIN, FLAT HEAD	1	
	AN960D10L	• WASHER	2	
	AN380-2-1	• PIN, COTTER	1	
		¤----¤-¤-¤----¤		
	AN315-3L	• NUT, USE WITH INDEX 57	1	
- 59	SA4188-3	• CABLE ASSEMBLY, PUSH-PULL (ACA)	1	
	AN365-1032	• NUT, USE WITH INDEX 59	1	
- 60	25-35080- 3	• CLEVIS, CANOPY EXTERNAL HANDLE	1	
		ATTACHING PARTS		
- 61	AN393-15	• PIN, FLAT HEAD	1	
	AN960D10L	• WASHER	3	
	AN380-2-1	• PIN, COTTER	1	
		¤----¤-¤-¤----¤		
- 62	25-35079- 3	• SUPPORT, EXTERNAL HANDLE PUSH-PULL CABLE	1	
- 63	25-35031- 3	• HANDLE, CANOPY EMERGENCY EXTERNAL OPEN	1	
		ATTACHING PARTS		
- 64	AN3-13A	• BOLT	1	
	AN960D10L	• WASHER	1	
	AN960D10	• WASHER	2	
	AN365-1032	• NUT	1	
		¤----¤-¤-¤----¤		
- 65	NAS72-3-012	• BUSHING	1	
- 66	25-35046- 3	• LATCH, CANOPY EMERGENCY EXTERNAL OPEN HANDLE	1	
		ATTACHING PARTS		
- 67	AN394-31	• PIN, FLAT HEAD	1	
	AN960D416L	• WASHER	2	
	AN380-2-1	• PIN, COTTER	1	
		¤----¤-¤-¤----¤		
- 68	25-35087- 3	• ROD END, CANOPY EMERGENCY CONTROLS, ALTERED FROM HFL3 (HEC)	1	
		ATTACHING PARTS		
- 69	AN3-10A	• BOLT	1	
	AN960D10L	• WASHER	1	
	AN960D10	• WASHER	2	
	AN365-1032	• NUT	1	
		¤----¤-¤-¤----¤		
	AN315-3L	• NUT, USE WITH INDEX 68	1	
- 70	SA4187-1	• CABLE ASSEMBLY, PUSH-PULL (ACA)	1	
- 71	15-35454- 3	• TRUNNION, CANOPY EMERGENCY CONTROLS	1	
		ATTACHING PARTS		
- 72	AN365-1032	• NUT	1	
	AN960-10	• WASHER	1	
		¤----¤-¤-¤----¤		
- 73	25-35084- 3	• SPRING, CANOPY EMER CONTROLS AIR VALVE LEVER	1	
		ATTACHING PARTS		
- 74	AN3-22A	• BOLT	1	
	AN960D10L	• WASHER	1	
	NAS43-3-61	• SPACER	1	
	NAS43-5-23	• SPACER	1	
	NAS43-3-47	• SPACER	1	
	AN960D10	• WASHER	1	
	AN365-1032	• NUT	1	
- 75	AN393-21	• PIN, FLAT HEAD	1	
	AN960D10L	• WASHER	3	
	AN380-2-1	• PIN, COTTER	1	
		¤----¤-¤-¤----¤		
- 76	25-35039- 3	• LEVER, GEARBOX & AIR VALVE OPERATING	1	
		ATTACHING PARTS		
- 77	AN4-15A	• BOLT	1	
	AN960D416	• WASHER	1	
	NAS72-4-011	• BUSHING	1	
		¤----¤-¤-¤----¤		

FIGURE & INDEX NUMBER	PART NUMBER	1 2 3 4 5 6 7 DESCRIPTION	UNITS PER ASS'Y	USABLE ON CODE
54 - 78	25-35040- 3	• BRACKET, GEARBOX & AIR VALVE LEVER	1	
		ATTACHING PARTS		
- 79	AN3-6A	• BOLT	2	
	AN960D10	• WASHER	2	
		¤----¤-¤-¤----¤		
- 80	AN3-10A	• BOLT	1	
	NAS43-3-17	• SPACER	2	
	AN365-1032	• NUT	1	
- 81	870447	• VALVE, CANOPY EMER CONTROLS AIR(WK)	1	
		ATTACHING PARTS		
- 82	AN3-14A	• BOLT	3	
	AN960D10	• WASHER	3	
		¤----¤-¤-¤----¤		
	25-69035-301	• ACTUATOR ASSEMBLY, CANOPY	1	
		ATTACHING PARTS		
- 83	AN365-524	• NUT	4	
	AN960-516L	• WASHER	4	
		¤----¤-¤-¤----¤		
- 84	MS21916D6-4	• • REDUCER	1	
	AN6290-6	• • GASKET, USE WITH INDEX 84	1	
- 85	15-35476- 1	• • FILTER ASSEMBLY, CANOPY AIR MOTOR	1	
- 86	NAS50-75	• • • RING, INTERNAL RETAINER	1	
- 87	15-35477- 1	• • • SCREEN ASSY, CANOPY AIR MOTOR FILTER	1	
- 88	15-35478- 3	• • • FITTING, CANOPY AIR MOTOR FILTER	1	
	AN6290-6	• • GASKET, USE WITH INDEX 85	1	
- 89	RD7440A	• • MOTOR, CANOPY MECH AIR (RO) MCDONNELL SPEC 15-35350	1	
		ATTACHING PARTS		
- 90	AN364-428	• • NUT	4	
	AN960D416L	• • WASHER	4	
		¤----¤-¤-¤----¤		
- 91	R624-1	• • MOTOR, CANOPY NORMAL OPERATING 26V D-C, (ARBN) MCDONNELL SPEC 15-07267-3	1	
		ATTACHING PARTS		
- 92	AN500A8-14	• • SCREW	2	
	AN500A8-12	• • SCREW	2	
		¤----¤-¤-¤----¤		
	E2220	• • • BRUSH (ARBN)	2	
- 93	25-35078- 3	• • BRACKET, CANOPY OPEN LIMIT SWITCH	1	
		ATTACHING PARTS		
- 94	AN364-428	• • NUT	2	
	AN960D416L	• • WASHER	2	
		¤----¤-¤-¤----¤		
- 95	36101-2-2	• • BOX ASSEMBLY, CANOPY MECHANISM GEAR (FBG) MCDONNELL SPEC 15-35327-17	1	

FIGURE & INDEX NUMBER	PART NUMBER	1 2 3 4 5 6 7 DESCRIPTION	UNITS PER ASS'Y	USABLE ON CODE
55 -	25-61100- 1	CONTROLS INSTALLATION, FORWARD FUSELAGE SURFACE, SEE FIG. 44-11 FOR NEXT HIGHER ASSEMBLY	REF	A-B
	25-61100-301	CONTROLS INSTALLATION, FORWARD FUSELAGE SURFACE, SEE FIG. 44-11 FOR NEXT HIGHER ASSEMBLY	REF	C-F
- 1	25-61037- 9	• ROD ASSY, RUD CONTROL	1	
		ATTACHING PARTS		
- 2	NAS464-4A15	• BOLT	2	
	AN960D416	• WASHER	4	
	AN364-428	• NUT	2	
		¤----¤-¤-¤----¤		
- 3	RE4M6	• • BEARING, ROD END (FAF)	1	
- 4	AN316-6R	• • NUT	1	
	25-61037-109	• • ROD ASSEMBLY	1	
- 5	RE4H6	• • • BEARING, ROD END (FAF)	1	
- 6	25-61070- 5	• • • ADAPTER, ROD END	1	
- 7	25-61073- 3	• • • ADAPTER, ADJUSTABLE ROD END	1	
- 8	25-61037-209	• • • TUBE	1	
- 9	25-61037- 11	• ROD ASSY, RUD CONTROL	1	
		ATTACHING PARTS		
- 10	NAS464-4A15	• BOLT	2	
	AN960D416	• WASHER	4	
	AN364-428	• NUT	2	
		¤----¤-¤-¤----¤		
- 11	RE4M6	• • BEARING, ROD END (FAF)	1	
- 12	AN316-6R	• • NUT	1	
	25-61037-111	• • ROD ASSEMBLY	1	
- 13	RE4H6	• • • BEARING, ROD END (FAF)	1	
- 14	25-61070- 3	• • • ADAPTER, ROD END	1	
- 15	25-61073- 3	• • • ADAPTER, ADJUSTABLE ROD END	1	
- 16	25-61037-211	• • • TUBE	1	
- 17	25-61011- 1	• BELL CRANK ASSEMBLY, RUDDER CONTROL	1	
		ATTACHING PARTS		
- 18	NAS464-5A25	• BOLT	1	
	AN960D516	• WASHER	2	
	AN364-524	• NUT	1	
		¤----¤-¤-¤----¤		
	DW5	• • BEARING (FAF)	1	
- 19	25-61037- 91	• ROD ASSY, RUD CONTROL	1	
		ATTACHING PARTS		
- 20	NAS464-4A15	• BOLT	2	
	AN960D416	• WASHER	4	
	AN364-428	• NUT	2	
		¤----¤-¤-¤----¤		
- 21	25-61091- 3	• • BEARING, SPECIAL ROD END, ALTERED FROM RE4S10 OR RE4H6, SPEC E3693 (FAF)	1	
- 22	AN316-8R	• • NUT	1	
	25-61037-191	• • ROD ASSEMBLY	1	
- 23	RE4H6	• • • BEARING, ROD END (FAF)	1	
- 24	25-61090- 3	• • • ADAPTER, FIXED ROD END	1	
- 25	25-61089- 5	• • • ADAPTER, ADJUSTABLE ROD END	1	
- 26	25-61037-291	• • • TUBE	1	
- 27	AN737-82	• CLAMP	1	
- 28	A3122-24-59	• CLAMP (TIN)	1	
- 29	25-61038- 1	• SEAL ASSEMBLY, RUDDER CONTROL COCKPIT	1	
- 30	25-61001- 1	• BELL CRANK ASSEMBLY, RUDDER CONTROL	1	
		ATTACHING PARTS		
- 31	NAS464-5A20	• BOLT	1	
	AN960D516	• WASHER	2	
	AN364-524	• NUT	1	
		¤----¤-¤-¤----¤		
	DW5	• • BEARING (FAF)	1	
- 32	25-61037- 15	• ROD ASSY, RUD CONTROL	1	
		ATTACHING PARTS		
- 33	NAS464-4A15	• BOLT	2	
	AN960D416	• WASHER	4	
	AN364-428	• NUT	2	
		¤----¤-¤-¤----¤		
- 34	RE4M6	• • BEARING, ROD END (FAF)	1	
- 35	AN316-6R	• • NUT	1	
	25-61037-115	• • ROD ASSEMBLY	1	
- 36	RE4H6	• • • ROD END (FAF)	1	
- 37	25-61071- 3	• • • ADAPTER, ROD END	1	
- 38	25-61067- 3	• • • ADAPTER, ADJUSTABLE ROD END	1	
- 39	25-61037-215	• • • TUBE	1	

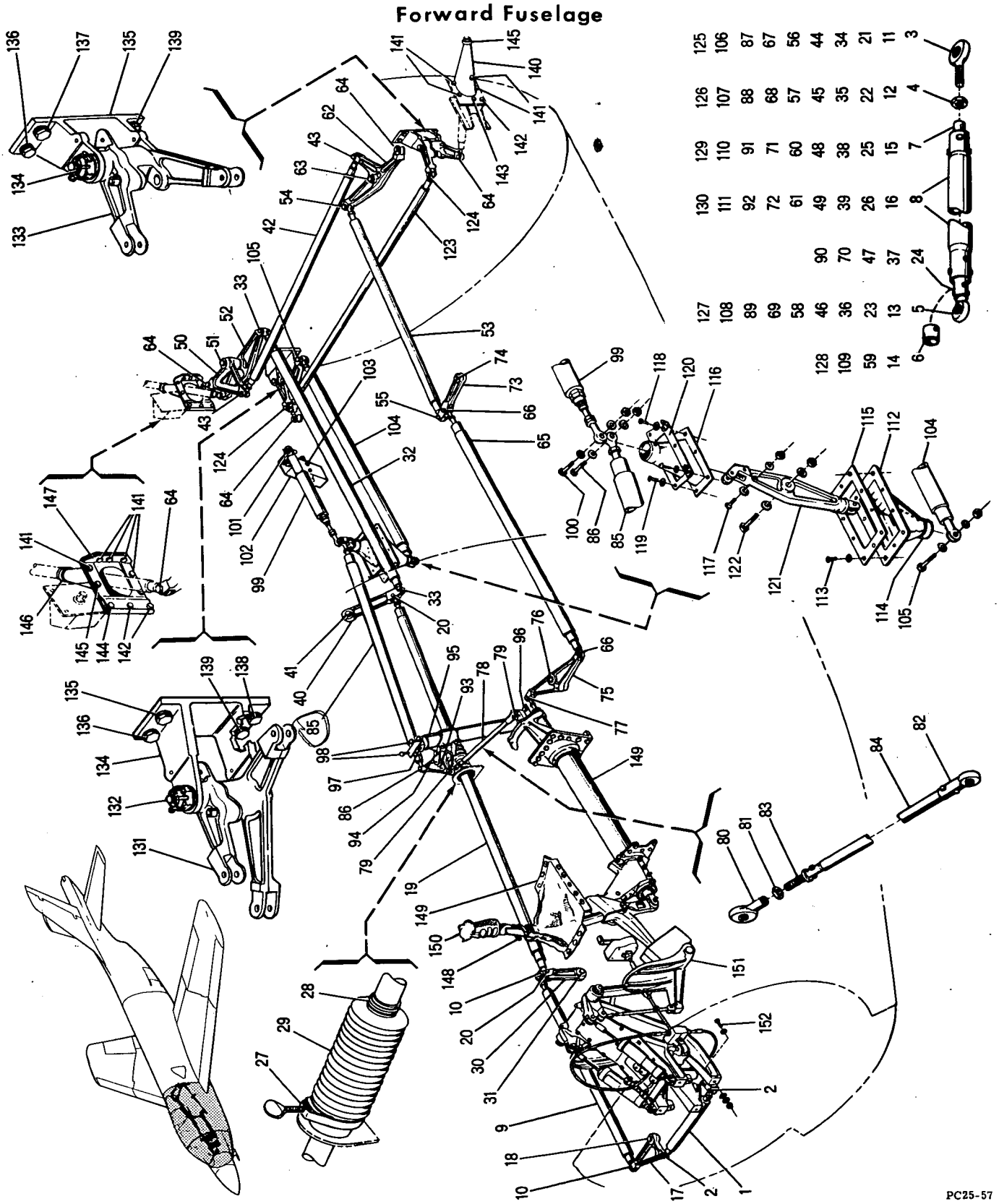

Figure 55 -- Forward Fuselage Surface Controls Installation

FIGURE & INDEX NUMBER	PART NUMBER	1 2 3 4 5 6 7 DESCRIPTION	UNITS PER ASS'Y	USABLE ON CODE
55 - 40	25-61002- 1	• BELL CRANK ASSEMBLY, RUDDER CONTROL	1	
		ATTACHING PARTS		
- 41	NAS464-5A21	• BOLT	1	
	AN960D516	• WASHER	2	
	AN364-524	• NUT	1	
		¤----¤-¤-¤----¤		
	DW5	• • BEARING (FAF)	1	
- 42	25-61037- 7	• ROD ASSEMBLY, STABILATOR CONTROL	1	
		ATTACHING PARTS		
- 43	NAS464-4A15	• BOLT	2	
	AN960D416	• WASHER	4	
	AN364-428	• NUT	2	
		¤----¤-¤-¤----¤		
- 44	RE4M6	• • BEARING, ROD END (FAF)	1	
- 45	AN316-6R	• • NUT	1	
	25-61037-107	• • ROD ASSEMBLY	1	
- 46	RE4H6	• • • BEARING, ROD END (FAF)	1	
- 47	25-61071- 3	• • • ADAPTER, ROD END	1	
- 48	25-61067- 3	• • • ADAPTER, ADJUSTABLE ROD END	1	
- 49	25-61037-207	• • • TUBE	1	
- 50	25-61026- 1	• BELL CRANK ASSEMBLY, STABILATOR CONTROL	1	
		ATTACHING PARTS		
- 51	NAS464-6-71	• BOLT	1	
	AN960D616	• WASHER	2	
	AN320-6	• NUT	1	
	AN380-3-3	• PIN, COTTER	1	
		¤----¤-¤-¤----¤		
	AN201KP6A	• • BEARING	2	
	NAS43DD6-91	• • SPACER	1	
- 52	25-61003- 1	• BELL CRANK ASSEMBLY, RUDDER CONTROL	1	
	DW6	• • BEARING (FAF)	1	
- 53	25-61037- 75	• ROD ASSEMBLY, STABILATOR CONTROL	1	
		ATTACHING PARTS		
- 54	NAS464-4A15	• BOLT	1	
	AN960D416	• WASHER	2	
	AN364-428	• NUT	1	
- 55	NAS464-4A16	• BOLT	1	
	AN960D416	• WASHER	2	
	AN364-428	• NUT	1	
		¤----¤-¤-¤----¤		
- 56	RE4M6	• • BEARING, ROD END (FAF)	1	
- 57	AN316-6R	• • NUT	1	
	25-61037-175	• • ROD ASSEMBLY	1	
- 58	RE4H6	• • • BEARING, ROD END (FAF)	1	
- 59	25-61070- 3	• • • ADAPTER, ROD END	1	
- 60	25-61073- 3	• • • ADAPTER, ADJUSTABLE ROD END	1	
- 61	25-61037-275	• • • TUBE	1	
- 62	25-61016- 1	• BELL CRANK ASSEMBLY, STABILATOR CONTROL	1	
		ATTACHING PARTS		
- 63	NAS464-6-69	• BOLT	1	
	AN960D616	• WASHER	2	
	AN320-6	• NUT	1	
	AN380-3-3	• PIN, COTTER	1	
		¤----¤-¤-¤----¤		
	AN201KP6A	• • BEARING	2	
	NAS43DD6-91	• • SPACER	1	
- 64	NAS464-4A15	• BOLT	5	
	AN960D416	• WASHER	10	
	AN364-428	• NUT	5	
- 65	25-61037- 3	• ROD ASSEMBLY, STABILATOR CONTROL	1	
		ATTACHING PARTS		
- 66	NAS464-4A16	• BOLT	2	
	AN960D416	• WASHER	4	
	AN364-428	• NUT	2	
		¤----¤-¤-¤----¤		
- 67	RE4M6	• • BEARING, ROD END (FAF)	1	
- 68	AN316-6R	• • NUT	1	
	25-61037-103	• • ROD ASSEMBLY	1	
- 69	RE4H6	• • • BEARING, ROD END (FAF)	1	
- 70	25-61071- 3	• • • ADAPTER, ROD END	1	
- 71	25-61067- 3	• • • ADAPTER, ADJUSTABLE ROD END	1	
- 72	25-61037-203	• • • TUBE	1	
- 73	25-61009- 1	• BELL CRANK ASSEMBLY, STABILATOR CONTROL	1	

FIGURE & INDEX NUMBER	PART NUMBER	1 2 3 4 5 6 7 DESCRIPTION	UNITS PER ASS'Y	USABLE ON CODE
55 -		ATTACHING PARTS		
- 74	NAS464-4A18	• BOLT	1	
	AN960D416L	• WASHER	1	
	AN960D416	• WASHER	1	
	AN364-428	• NUT	1	
		¤----¤-¤-¤----¤		
	DW4	• • BEARING (FAF)	1	
- 75	25-61008- 1	• BELL CRANK ASSEMBLY, STABILATOR CONTROL	1	
		ATTACHING PARTS		
- 76	NAS464-5A32	• BOLT	1	
	AN960D516	• WASHER	2	
	AN364-524	• NUT	1	
- 77	NAS464-4A16	• BOLT	1	
	AN960D416	• WASHER	2	
	AN364-428	• NUT	1	
		¤----¤-¤-¤----¤		
	AN201KP5A	• • BEARING, LOWER	1	
	4M36-02030	• • WASHER (MDA)	1	
	DW5	• • BEARING (FAF) UPPER	1	
- 78	25-61037- 77	• ROD ASSEMBLY, AILERON CONTROL	1	
		ATTACHING PARTS		
- 79	NAS464-4A15	• BOLT	2	
	AN960D416	• WASHER	4	
	AN364-428	• NUT	2	
		¤----¤-¤-¤----¤		
- 80	RE4F5	• • BEARING, ROD END (FAF)	1	
- 81	AN316-5R	• • NUT	1	
	25-61037-177	• • ROD ASSEMBLY	1	
- 82	19-61075- 5	• • • BEARING, ROD END, ALTERED FROM RE4H6 OR RE4S10 (FAF)	1	
- 83	AN490HT15P	• • • ROD END, THREADED	1	
- 84	25-61037-277	• • • TUBE	1	
- 85	25-61037- 19	• ROD ASSEMBLY, AILERON CONTROL	1	
		ATTACHING PARTS		
- 86	NAS464-4A15	• BOLT	2	
	AN960D416	• WASHER	4	
	AN364-428	• NUT	2	
		¤----¤-¤-¤----¤		
- 87	RE4M6	• • BEARING, ROD END (FAF)	1	
- 88	AN316-6R	• • NUT	1	
	25-61037-119	• • ROD ASSEMBLY	1	
- 89	RE4H6	• • • BEARING, ROD END (FAF)	1	
- 90	25-61071- 3	• • • ADAPTER, ROD END	1	
- 91	25-61067- 3	• • • ADAPTER, ADJUSTABLE ROD END	1	
- 92	25-61037-219	• • • TUBE	1	
- 93	25-61102- 1	• BELL CRANK ASSEMBLY, AILERON CONTROL	1	
		ATTACHING PARTS		
- 94	NAS464-4A34	BOLT	1	A-B
	NAS464-4-34	• BOLT	1	C-F
	AN960D416	• WASHER	2	
	AN364-428	NUT	1	A-B
	AN320-4	• NUT	1	C-F
	AN380-2-3	• PIN, COTTER	1	C-F
		¤----¤-¤-¤----¤		
	AN201KP4A	• • BEARING	2	
	NAS43DD4-76	• • SPACER	1	
- 95	25-61080- 1	• BRACKET ASSEMBLY, AILERON CONTROL TORQUE TUBE	1	
		ATTACHING PARTS		
- 96	AN4-6A	• BOLT	4	
	AN960D416L	• WASHER	4	
	AN960D416	• WASHER	8	
	AN364-428	• NUT	4	
- 97	AN4-14A	• BOLT	1	
	AN960D416	• WASHER	3	
	AN364-428	• NUT	1	
- 98	AN4-16A	• BOLT	2	
	4M36-02034	• WASHER (MDA)	2	
	NAS43DD4-54	SPACER	2	
	AN960D416	• WASHER	4	
	AN364-428	• NUT	2	
		¤----¤-¤-¤----¤		
- 99	25-61103- 3	• CARTRIDGE ASSY, AILERON FEEL SYSTEM SPRING, SEE FIG. 58	1	

FIGURE & INDEX NUMBER	PART NUMBER	1 2 3 4 5 6 7 DESCRIPTION	UNITS PER ASS'Y	USABLE ON CODE
55 -		ATTACHING PARTS		
-100	NAS464-4A15	• BOLT	1	
	AN960D416	• WASHER	2	
	AN364-428	• NUT	1	
-101	AN364-428	• NUT	1	
	4M36-02004	• WASHER (MDA)	1	
		¤----¤-¤-¤----¤		
-102	AL1910	• ACTUATOR, AILERON ARTIFICIAL FEEL TRIM (BC) MCDONNELL SPEC 25-69060-3, ALTERNATE AL1423-1 (BC) MCDONNELL SPEC 25-69060-1	1	
		ATTACHING PARTS		
-103	AN4-25A	• BOLT	4	
	AN960D416	• WASHER	4	
		¤----¤-¤-¤----¤		
-104	25-61037- 21	• ROD ASSEMBLY, AILERON CONTROL	1	
		ATTACHING PARTS		
-105	NAS464-4A15	• BOLT	2	
	AN960D416	• WASHER	4	
	AN364-428	• NUT	2	
		¤----¤-¤-¤----¤		
-106	RE4M6	• • BEARING, ROD END (FAF)	1	
-107	AN316-6R	• • NUT	1	
	25-61037-121	• • ROD ASSEMBLY	1	
-108	RE4H6	• • • BEARING, ROD END (FAF)	1	
-109	25-61070- 3	• • • ADAPTER, ROD END	1	
-110	25-61073- 3	• • • ADAPTER, ADJUSTABLE ROD END	1	
-111	25-61037-221	• • • TUBE	1	
-112	25-61052- 1	• SEAL ASSEMBLY, AILERON CONTROL BELL CRANK FUME	1	
		ATTACHING PARTS		
-113	NAS229-9	• SCREW	10	
	AN960D10	• WASHER	10	
-114	A3122-22-59	• CLAMP (TIN)	1	
		¤----¤-¤-¤----¤		
-115	25-61053- 3	• PLATE, AILERON CONTROL BULKHEAD FUME SEAL	1	
-116	25-61112- 3	• SEAL ASSEMBLY, AILERON CONTROL BELL CRANK	1	
		ATTACHING PARTS		
-117	NAS229-10	• SCREW	1	
	AN960D10	• WASHER	2	
	AN364-1032	• NUT	1	
-118	NAS229-10	• SCREW	2	
	AN960D10L	• WASHER	2	
-119	NAS229-9	• SCREW	4	
	AN960D10L	• WASHER	4	
		¤----¤-¤-¤----¤		
-120	25-61113- 3	• PLATE, AILERON CONTROL BELL CRANK	1	
-121	25-61005- 1	• BELL CRANK ASSEMBLY, AILERON CONTROL	1	
		ATTACHING PARTS		
-122	NAS464-5A20	• BOLT	1	
	AN960D516	• WASHER	2	
	AN364-524	• NUT	1	
		¤----¤-¤-¤----¤		
	DW5	• • BEARING (FAF)	1	
-123	25-61037- 23	• ROD ASSY, AIL. CROSS	1	
		ATTACHING PARTS		
-124	NAS464-4A15	• BOLT	2	
	AN960D416	• WASHER	4	
	AN364-428	• NUT	2	
		¤----¤-¤-¤----¤		
-125	RE4M6	• • BEARING, ROD END (FAF)	1	
-126	AN316-6R	• • NUT	1	
	25-61037-123	• • ROD ASSEMBLY	1	
-127	RE4H6	• • • BEARING, ROD END (FAF)	1	
-128	25-61070- 3	• • • ADAPTER, ROD END	1	
-129	25-61073- 3	• • • ADAPTER, ADJUSTABLE ROD END	1	
-130	25-61037-223	• • • TUBE	1	
-131	25-61007- 1	• BELL CRANK ASSEMBLY, AILERON CONTROL	1	
		ATTACHING PARTS		
-132	NAS464-5-53	• BOLT	1	
	AN960D516L	• WASHER	1	
	AN960D516	• WASHER	1	
	AN320-5	• NUT	1	
	AN380-2-3	• PIN, COTTER	1	
		¤----¤-¤-¤----¤		

FIGURE & INDEX NUMBER	PART NUMBER	1 2 3 4 5 6 7 DESCRIPTION	UNITS PER ASS'Y	USABLE ON CODE
55 -133	25-61006- 1	• BELL CRANK ASSEMBLY, AILERON CONTROL	1	
		ATTACHING PARTS		
-134	NAS464-5-53	• BOLT	1	
	AN960D516L	• WASHER	1	
	AN960D516	• WASHER	1	
	AN320-5	• NUT	1	
	AN380-2-3	• PIN, COTTER	1	
		¤----¤-¤-¤----¤		
-135	25-61018- 1	• SUPPORT ASSEMBLY, AILERON BELL CRANK	2	
		ATTACHING PARTS		
-136	AN4-13A	• BOLT	2	
	AN960D416	• WASHER	4	
-137	AN5-13A	• BOLT	2	
	AN960D516	• WASHER	2	
	AN960D516L	• WASHER	2	
-138	AN4-14A	• BOLT	2	
	AN960D416	• WASHER	2	
-139	AN5-14A	• BOLT	2	
	AN960D516	• WASHER	2	
		¤----¤-¤-¤----¤		
	AN201KP5A	• • BEARING	2	
-140	25-61094- 1	• SEAL ASSEMBLY, AILERON CONTROL INTO WING FUME	2	
		ATTACHING PARTS		
-141	NAS229-9	• SCREW	13	
	AN960D10	• WASHER	13	
	AN960D10L	• WASHER	13	
	AN364-1032	• NUT	13	
-142	NAS229-12	• SCREW	3	
	AN960D10	• WASHER	6	
	AN364-1032	• NUT	3	
-143	AN3-6A	• BOLT, LEFT SIDE	1	
	AN960D10L	• WASHER	1	
	AN960D10	• WASHER	1	
	AN365-1032	• NUT	1	
-144	AN3-7A	• BOLT, RIGHT SIDE	1	
	AN960D10L	• WASHER	1	
	AN960D10	• WASHER	2	
	AN365-1032	• NUT	1	
-145	AN3-6A	• BOLT, RIGHT SIDE	1	
	AN960D10L	• WASHER	1	
	AN960D10	• WASHER	2	
	AN365-1032	• NUT	1	
-146	A3122-18-59	• CLAMP (TIN)	2	
		¤----¤-¤-¤----¤		
-147	25-61095- 3	• PLATE, AILERON CONTROL ROD INTO WING FUME SEAL	2	
-148	AN735D22	• CLAMP	1	
		ATTACHING PARTS		
	NAS229-9	• SCREW	1	
	AN960D10L	• WASHER	1	
	AN960D10	• WASHER	1	
	AN365-1032	• NUT	1	
		¤----¤-¤-¤----¤		
-149	25-61083- 1	• BOOT ASSEMBLY, LOWER CONTROL STICK	1	
-150	25-61020- 1	• STICK INSTALLATION, CONTROL, SEE FIG. 56	1	
-151	25-61010- 1	• PEDAL ASSEMBLY, RUDDER & BRAKE, SEE FIG. 57	1	
		ATTACHING PARTS		
-152	AN4-11A	• BOLT	4	
	AN960D416L	• WASHER	4	
	AN960D416	• WASHER	8	
	AN365-428	• NUT	4	
		¤----¤-¤-¤----¤		

FIGURE & INDEX NUMBER	PART NUMBER	1 2 3 4 5 6 7 DESCRIPTION	UNITS PER ASS'Y	USABLE ON CODE
56 - 34	NAS428H4-14	• • BOLT	1	
	AN315-4R	• • NUT	1	
	AN960D416L	• • WASHER	1	
	AN960D416	• • WASHER	1	
	AN364-428	• • NUT	1	
- 35	AN200KP5	• • BEARING	2	
- 36	25-61034- 3	• BELL CRANK, AILERON TORQUE TUBE AFT	1	
		ATTACHING PARTS		
- 37	NAS464-4A9	• BOLT	5	
	AN960D416L	• WASHER	5	
	AN960D416	• WASHER	5	
	AN364-428	• NUT	5	
		¤----¤-¤-¤----¤		
- 38	25-61022- 1	• SUPPORT ASSEMBLY, AILERON TORQUE TUBE AFT	1	
		ATTACHING PARTS		
- 39	AN3-6A	• BOLT	14	
	AN960D10L	• WASHER	14	
	AN960D10	• WASHER	14	
	AN364-1032	• NUT	14	
- 40	AN3-6A	• BOLT	4	
	AN960D10	• WASHER	12	
	AN364-1032	• NUT	4	
- 41	AN3-7	• BOLT	2	
	AN960D10	• WASHER	6	
	AN310-3	• NUT	2	
	AN380-2-3	• PIN, COTTER	2	
		¤----¤-¤-¤----¤		
- 42	NAS50-387	• • RING, INTERNAL RETAINER	1	
- 43	AN202KP47B	• • BEARING	1	
- 44	AN6244-13	• RING, BACK UP	2	
- 45	25-61021- 1	• SUPPORT ASSEMBLY, AIL. CONTROL TORQUE TUBE FWD	1	
		ATTACHING PARTS		
- 46	AN4-7A	• BOLT	2	
	AN960D416	• WASHER	6	
	AN364-428	• NUT	2	
- 47	AN4-10A	• BOLT	2	
	AN960D416	• WASHER	6	
	AN364-428	• NUT	2	
- 48	AN3-6A	• BOLT	4	
	AN960D10L	• WASHER	4	
	AN960D10	• WASHER	8	
	AN364-1032	• NUT	4	
- 49	AN3-7A	• BOLT	2	
	AN960D10L	• WASHER	2	
	AN960D10	• WASHER	4	
	AN364-1032	• NUT	2	
		¤----¤-¤-¤----¤		
- 50	NAS428H4-16	• • BOLT	2	
	AN364-428	• • NUT	2	
	AN960D416L	• • WASHER	4	
	AN315-4R	• • NUT	2	
- 51	AN202KP47B	• • BEARING	1	
- 52	25-61041- 1	• TUBE ASSEMBLY, AILERON CONTROL TORQUE	1	

Forward Fuselage

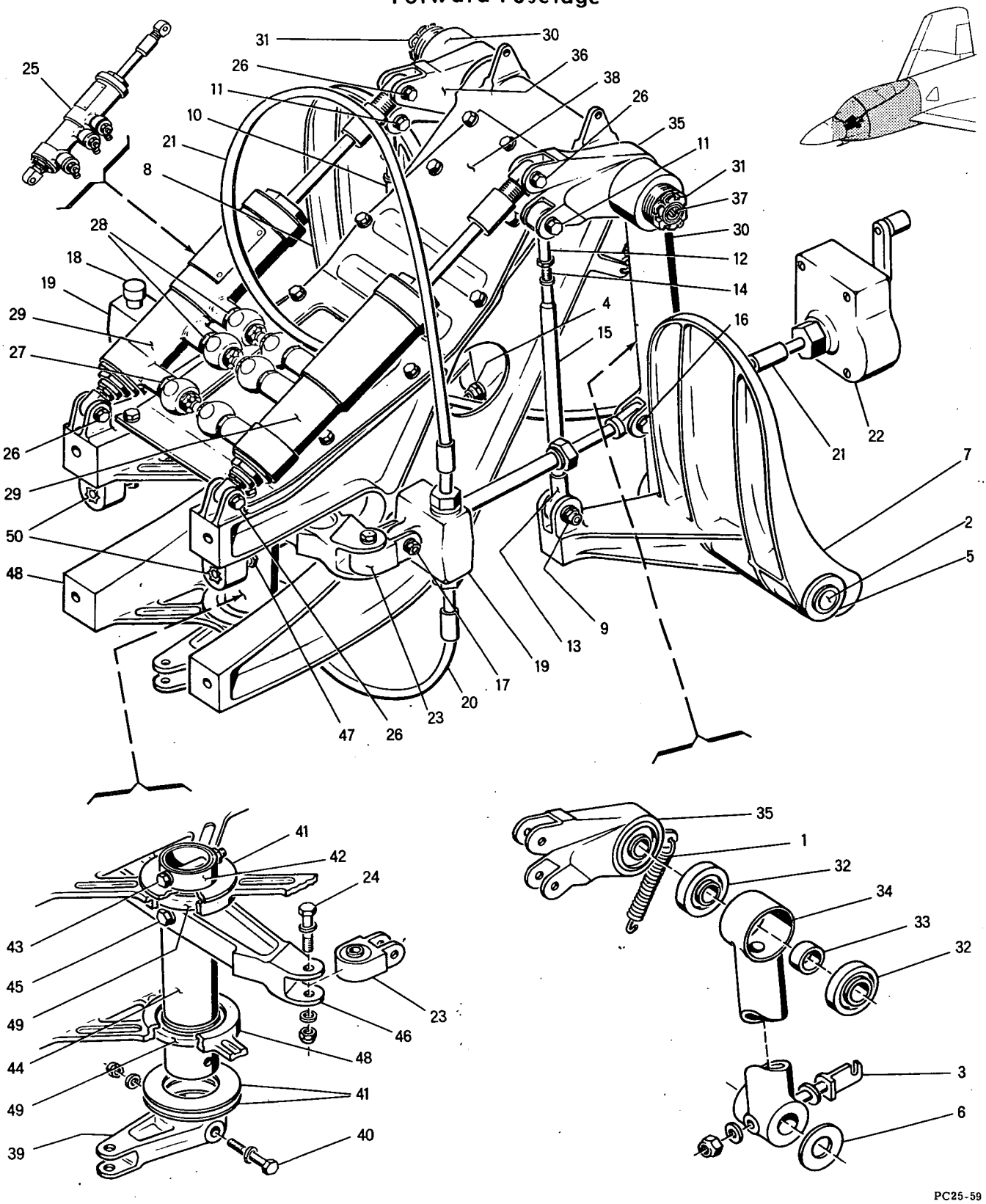

Figure 57 -- Rudder and Brake Pedal Assembly

FIGURE & INDEX NUMBER	PART NUMBER	1 2 3 4 5 6 7 DESCRIPTION	UNITS PER ASS'Y	USABLE ON CODE
57 -	25-61010- 1	PEDAL ASSEMBLY, RUDDER & BRAKE, SEE FIG. 55-151 FOR NEXT HIGHER ASSEMBLY	REF	
- 1	15-42075	• SPRING, MAIN LG OUTBD DOOR HOOK LOCK EXTENSION	2	
- 2	19-61003- 3	• SHAFT, RUDDER AND BRAKE PEDAL	2	
		ATTACHING PARTS		
- 3	25-61097- 3	• BOLT, SURFACE CONTROL SPECIAL LOCK, LEFT SIDE	1	
	AN960D516	• WASHER	2	
	AN364-524	• NUT	1	
- 4	AN5-20A	• BOLT, RIGHT SIDE	1	
	AN960D516L	• WASHER, RIGHT SIDE ONLY	1	
	AN960D516	• WASHER	2	
	AN364-524	• NUT	1	
		¤----¤-¤-¤----¤		
- 5	AN960-1216L	• WASHER	AR	
- 6	AN960-1216L	• WASHER	1	
- 7	25-61030- 1	• PEDAL ASSY, RUDDER LH	1	
- 8	25-61030- 2	• PEDAL ASSY, RUDDER RH	1	
		ATTACHING PARTS		
- 9	AN24-19A	• BOLT	2	
	AN960D416L	• WASHER	2	
	AN960D416	• WASHER	2	
	AN364-428	• NUT	2	
		¤----¤-¤-¤----¤		
	B1212	• • BEARING (TOR)	2	
- 10	25-61037- 69	• ROD ASSEMBLY, BRAKE CONTROL	2	
		ATTACHING PARTS		
- 11	NAS464-4A14	• BOLT	2	
	AN960D416L	• WASHER	2	
	AN960D416	• WASHER	2	
	AN364-428	• NUT	2	
		¤----¤-¤-¤----¤		
- 12	RE4F5	• • BEARING, ROD END (FAF)	1	
	AN316-5R	• • NUT	1	
	25-61037-169	• • ROD ASSEMBLY	1	
- 13	19-61075- 5	• • • BEARING, AUTO PILOT RUDDER PUSH-PULL ROD END, ALTERED FROM RE4H6 (FAF)	1	
- 14	AN490HT15P	• • • ROD END, THREADED	1	
- 15	25-61037-269	• • • TUBE	1	
	25-69143- 1	• ACTUATOR ASSEMBLY, RUDDER PEDAL ADJUSTMENT	1	
		ATTACHING PARTS		
- 16	NAS464-4A13	• BOLT	2	
	AN960D416L	• WASHER	2	
	25-61050- 5	• BUSHING, CONTROL SYSTEM CLOSE TOLERANCE	2	
	AN960D416	• WASHER	2	
	AN364-428	• NUT	2	
- 17	NAS464-4A14	• BOLT	2	
	AN960D416L	• WASHER	2	
	25-61099- 3	• BUSHING, CONTROL SYSTEM CLOSE TOLERANCE	2	
	AN960D416	• WASHER	2	
	AN364-428	• NUT	2	
		¤----¤-¤-¤----¤		
- 18	21501	• • CAP, SCREW JACK (LA) MCDONNELL SPEC 25-69143-13	1	
- 19	550FV	• • SCREW JACK (LA) MCDONNELL SPEC 25-69143-3	2	
- 20	15939-021-16	• • SHAFT, FLEXIBLE, LOWER (LA) MCDONNELL SPEC 25-69143-5	1	
- 21	15939-049-25	• • SHAFT, FLEXIBLE, UPPER (LA) MCDONNELL SPEC 25-69143-7	1	
- 22	835A	• • GEARBOX ASSEMBLY (LA) MCDONNELL SPEC 25-69143-9	1	
- 23	25-61035- 1	• UNIVERSAL ASSEMBLY, RUDDER RUNAROUND	2	
		ATTACHING PARTS		
- 24	NAS464-4A19	• BOLT	2	
	AN960D416L	• WASHER	2	
	AN960D416	• WASHER	2	
	AN364-428	• NUT	2	
		¤----¤-¤-¤----¤		
	DW4	• • BEARING (FAF)	1	
- 25	25-69029- 3	• CYLINDER ASSEMBLY, POWER BOOST MASTER BRAKE	2	
		ATTACHING PARTS		
- 26	NAS464-4A12	• BOLT	4	
	AN960D416L	• WASHER	4	
	AN960D416	• WASHER	4	
	AN364-428	• NUT	4	
		¤----¤-¤-¤----¤		

FIGURE & INDEX NUMBER	PART NUMBER	1 2 3 4 5 6 7 DESCRIPTION	UNITS PER ASS'Y	USABLE ON CODE
57 - 27	7M7D4	• • SWIVEL ASSY (MDA)	1	
	AN6290-4	• • GASKET, USE WITH INDEX 27	1	
- 28	7M7D5	• • SWIVEL ASSY (MDA)	2	
	AN6290-5	• • GASKET, USE WITH INDEX 28	2	
- 29	148943	• • CYLINDER, HYD POWER ASSISTED MASTER BRAKE (BPD) MCDONNELL SPEC 25-69038-1	1	
- 30	25-61031- 1	• ARM ASSEMBLY, PEDAL HANGER	2	
		ATTACHING PARTS		
- 31	AN380-4-7	• PIN, COTTER	2	
	AN320-12	• NUT	2	
	AN960-1216L	• WASHER	AR	
		¤----¤-¤-¤----¤		
- 32	AN201KP12A	• • BEARING	2	
- 33	NAS43DD12-28	• • SPACER	1	
- 34	25-61031- 3	• • ARM	1	
- 35	25-61012- 1	• BELL CRANK ASSEMBLY, BRAKE CONTROL LH	1	
- 36	25-61012- 2	• BELL CRANK ASSEMBLY, BRAKE CONTROL RH	1	
	AN201KP12A	• • BEARING	2	
- 37	25-61046- 3	• TUBE, RUDDER PEDAL HANGER ARM SUPPORT	1	
- 38	25-61047- 3	• PLATE, RUDDER PEDAL COVER	1	
- 39	25-61014- 3	• ARM, RUDDER CONTROL TORQUE TUBE	1	
		ATTACHING PARTS		
- 40	NAS464-5A32	• BOLT	1	
	AN960D516L	• WASHER	1	
	AN960D516	• WASHER	1	
	AN364-524	• NUT	1	
		¤----¤-¤-¤----¤		
- 41	4M36-13006	• WASHER (MDA)	AR	
- 42	19-61024- 3	• SPACER, RUD RUNAROUND	1	
		ATTACHING PARTS		
- 43	NAS464-4A26	• BOLT	1	
	AN960D416L	• WASHER	1	
	AN960D416	• WASHER	1	
	AN364-428	• NUT	1	
		¤----¤-¤-¤----¤		
- 44	25-61043- 3	• TUBE, RUDDER CONTROL TORQUE	1	
		ATTACHING PARTS		
- 45	NAS464-5A30	• BOLT	1	
	AN960D516L	• WASHER	1	
	AN960D516	• WASHER	1	
	AN364-524	• NUT	1	
		¤----¤-¤-¤----¤		
- 46	25-61013- 3	• BELL CRANK, RUDDER RUNAROUND	1	
- 47	NAS428H4-12	• BOLT	2	
	AN960D416L	• WASHER	2	
	AN316-4R	• NUT	2	
- 48	25-61029- 1	• SUPPORT ASSEMBLY, RUDDER PEDAL	1	
- 49	AN202KP23B	• • BEARING	2	
- 50	RD206SB8	• • INSERT (ROSN)	2	
	RL27SB8	• • RING, LOCK (ROSN) USE WITH INDEX 50	2	

Forward Fuselage

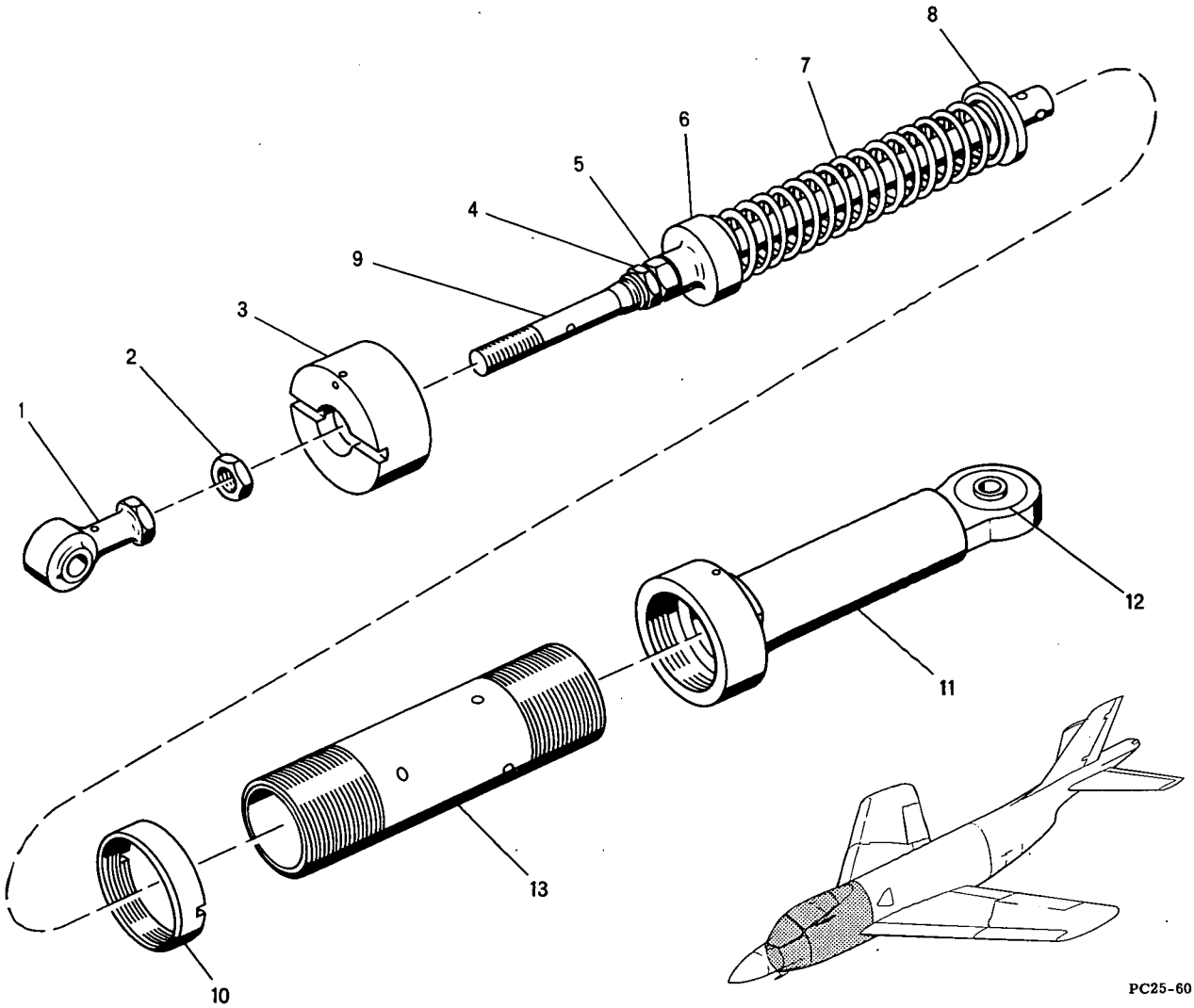

Figure 58 - Aileron Feel System Spring Cartridge Assembly

FIGURE & INDEX NUMBER	PART NUMBER	1 2 3 4 5 6 7 DESCRIPTION	UNITS PER ASS'Y	USABLE ON CODE
58 -	25-61103- 3	CARTRIDGE ASSY, AILERON FEEL SYSTEM SPRING, SEE FIG. 55-99 FOR NEXT HIGHER ASSEMBLY	REF	
- 1	25-61093- 3	• ROD END, AILERON FEEL SYSTEM SPRING CARTRIDGE, ALTERED FROM RE4F5 (FAF)	1	
- 2	AN316-5R	• NUT	1	
- 3	25-61107- 3	• CAP, AIL. FEEL SYSTEM SPRING CARTRIDGE END	1	
- 4	AN364-624	• NUT	1	
- 5	AN315-6R	• NUT	1	
- 6	25-61106- 3	• PISTON, AIL. FEEL SYS SPRING CARTRIDGE LARGE	1	
- 7	25-61114- 3	• SPRING, AILERON FEEL SYSTEM SPRING CARTRIDGE COMPRESSION	1	
- 8	25-61111- 3	• PISTON, AIL. FEEL SYS SPRING CARTRIDGE SMALL	1	
- 9	25-61109- 1	• ROD ASSY, AIL. FEEL SYSTEM SPRING CARTRIDGE	1	
- 10	25-61108- 3	• NUT, AIL. FEEL SYSTEM SPRING CARTRIDGE CHECK	1	
- 11	25-61104- 1	• FITTING ASSEMBLY, AILERON FEEL SYSTEM SPRING CARTRIDGE END	1	
- 12	AN200KS4	• • BEARING	1	
- 13	25-61105- 3	• BARREL, AILERON FEEL SYSTEM SPRING CARTRIDGE	1	

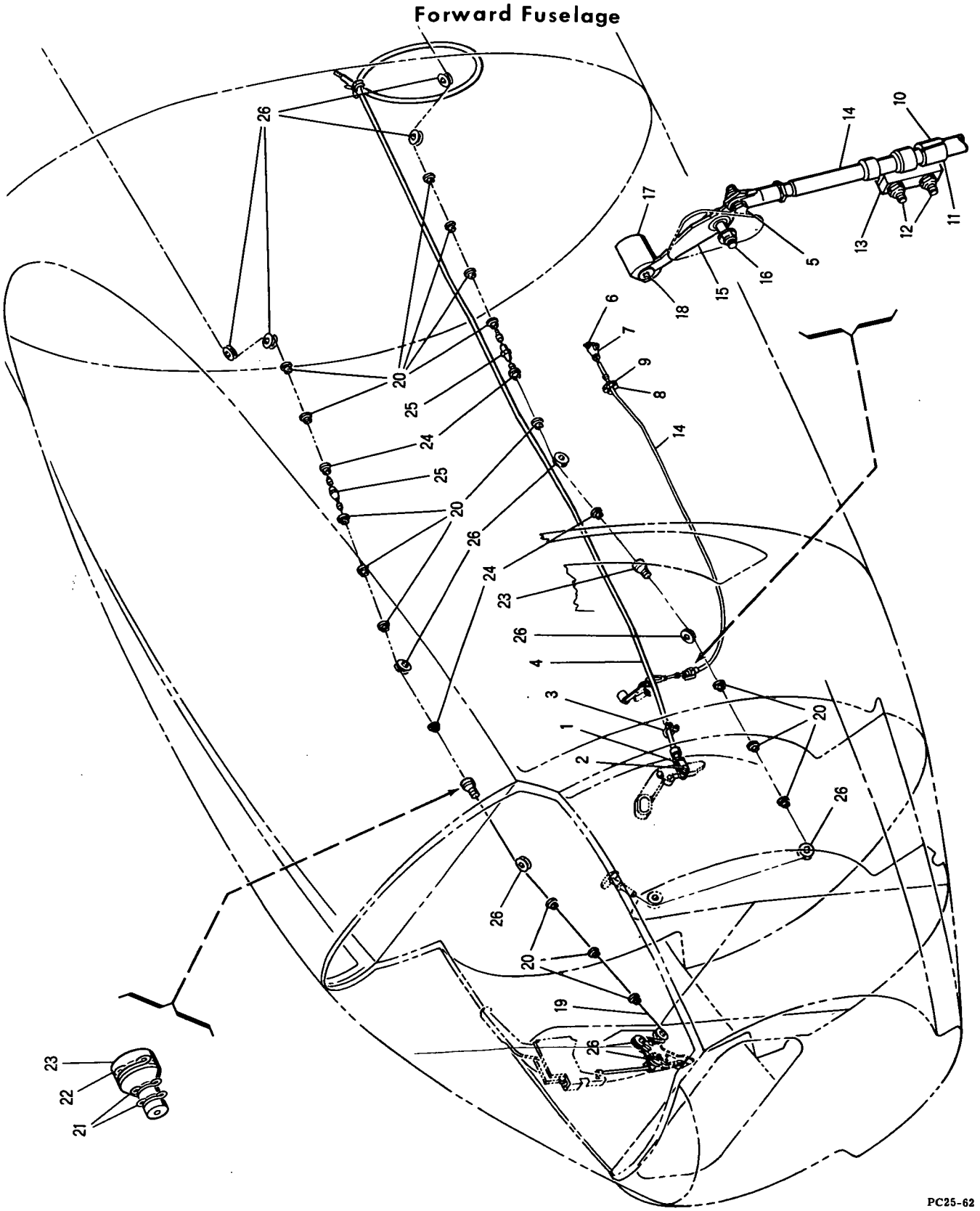

Figure 59 -- Forward Fuselage Auxiliary Controls Installation

FIGURE & INDEX NUMBER	PART NUMBER	1 2 3 4 5 6 7 DESCRIPTION	UNITS PER ASS'Y	USABLE ON CODE
59 -	25-68100- 1	CONTROLS INSTALLATION, FORWARD FUSELAGE AUXILIARY SEE FIG. 44-7 FOR NEXT HIGHER ASSEMBLY	REF	
- 1	25-35080- 3	• CLEVIS, CANOPY EXTERNAL HANDLE	1	A-B
	25-82023- 9	• CLEVIS, CANOPY EXTERNAL HANDLE	1	C-F
		ATTACHING PARTS		
- 2	AN23-12	• BOLT	1	
	AN960D10	• WASHER	2	
	AN320-3	• NUT	1	
	AN380-2-2	• PIN, COTTER	1	
		¤----¤-¤-¤----¤		
	AN315-3R	• NUT, USE WITH INDEX 1	1	
- 3	15-83277- 3	• BOLT, HEATER VALVE CONTROL CABLE	1	
	AN960D10	• WASHER, USE WITH INDEX 3	2	
	AN364-1032	• NUT, USE WITH INDEX 3	2	
- 4	SA4188-5	• CABLE ASSEMBLY (ACA) EMER HYD PUMP CONTROL	1	
- 5	AN23-11	• BOLT	1	
	AN960D10	• WASHER	1	
	AN320-3	• NUT	1	
	AN380-2-2	• PIN, COTTER	1	
- 6	AN23-12	• BOLT	1	
	AN960D10	• WASHER	2	
	AN320-3	• NUT	1	
	AN380-2-2	• PIN, COTTER	1	
- 7	AN665-21L	• TERMINAL	2	
	AN315-3L	• NUT, USE WITH INDEX 7	2	
- 8	25-68142- 3	• PLATE, EMERGENCY SLAT PUSH-PULL CABLE SUPPORT	2	
		ATTACHING PARTS		
- 9	AN3-5A	• BOLT	4	
	AN960D10L	• WASHER	4	
	AN960D10	• WASHER	4	
	AN365-1032	• NUT	4	
		¤----¤-¤-¤----¤		
- 10	25-80064- 3	• CLAMP, EMERGENCY SLAT VALVE CONTROL LH	1	
- 11	25-80064- 4	• CLAMP, EMERGENCY SLAT VALVE CONTROL RH	1	
		ATTACHING PARTS		
- 12	AN3-11A	• BOLT	2	
	AN960D10	• WASHER	4	
	AN364-1032	• NUT	2	
		¤----¤-¤-¤----¤		
- 13	25-80061- 3	• SPACER, EMERGENCY SLAT VALVE CONTROL	1	
- 14	SA4188-6	• CABLE ASSY (ACA) EMERGENCY SLAT VALVE CONTROL	1	
- 15	25-80062- 1	• HANDLE ASSEMBLY, EMERGENCY SLAT VALVE CONTROL	1	
		ATTACHING PARTS		
- 16	AN4-11A	• BOLT	1	
	AN970-4	• WASHER	1	
	NAS43-4-9	• SPACER	1	
	AN960D416	• WASHER	1	
	AN364-428	• NUT	1	
		¤----¤-¤-¤----¤		
- 17	25-80065- 3	• • KNOB, EMERGENCY SLAT VALVE CONTROL	1	
		ATTACHING PARTS		
- 18	NAS229-17	• • SCREW	1	
	AN960D10	• • WASHER	1	
	22-1650-02	• • NUT, FLUSH (EN)	1	
		¤----¤-¤-¤----¤		
- 19	NAS313-21-1201	• CABLE ASSEMBLY, ARRESTING GEAR RELEASE	1	
- 20	1DRE1409	• BUSHING, CONTROL CABLE GUIDE (FN)	16	
- 21	S11L31C	• RING (HRML)	4	
- 22	S11L32C	• RING (HRML)	2	
- 23	S11K3	• SEAL, PRESSURE (HRML)	2	
- 24	3DRE1409	• BUSHING, CONTROL CABLE GUIDE (FN)	4	
- 25	AN155-16S	• BARREL, TURNBUCKLE	2	
- 26	AN219-2	• PULLEY	12	

Forward Fuselage

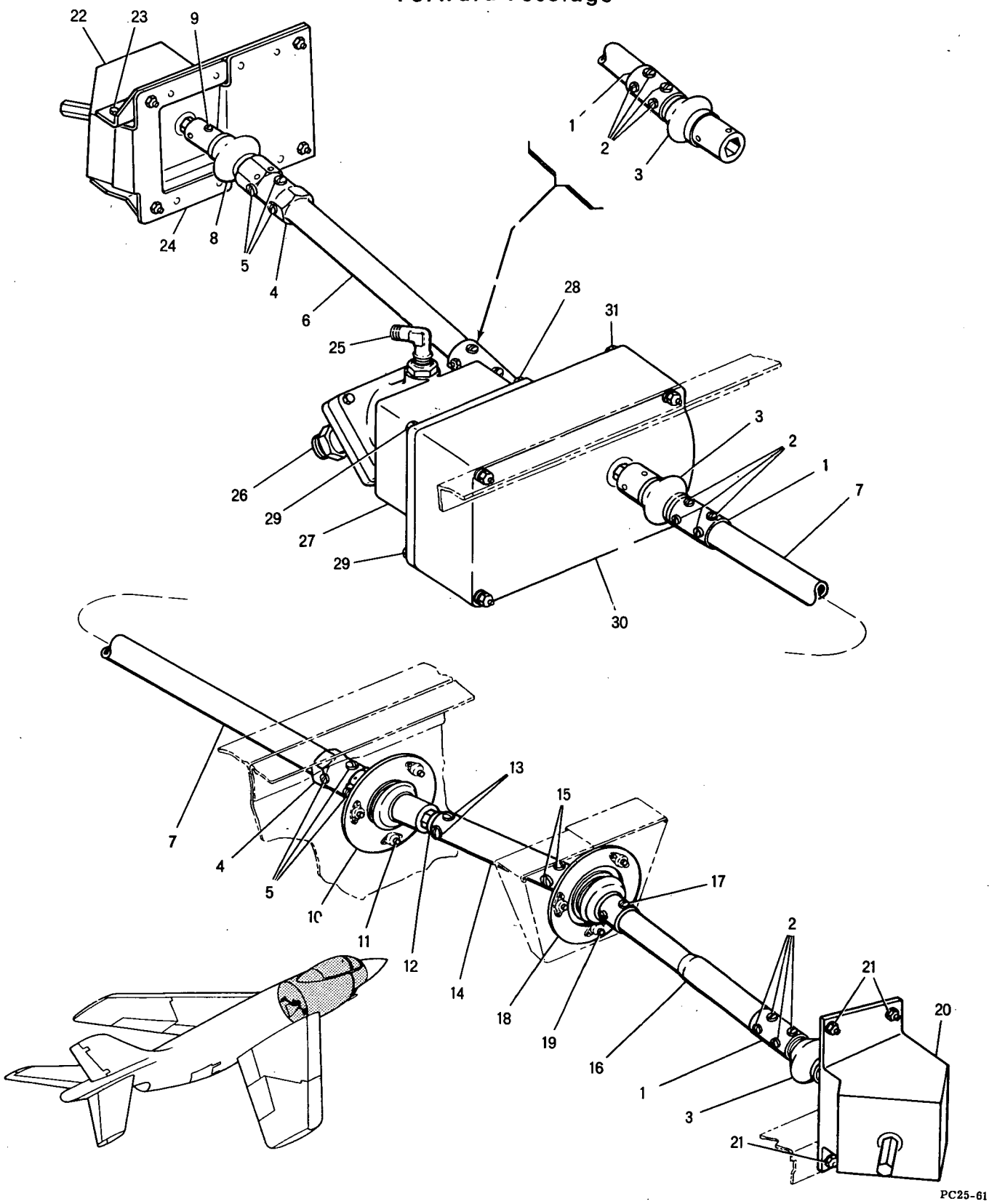

Figure 60 -- Fuselage Wing Slat Controls Installation

FIGURE & INDEX NUMBER	PART NUMBER	1 2 3 4 5 6 7 DESCRIPTION	UNITS PER ASS'Y	USABLE ON CODE
60 -	25-67301- 1	CONTROLS INSTALLATION, FUSELAGE WING SLAT, SEE FIG. 44-12 FOR NEXT HIGHER ASSEMBLY	REF	
- 1	25-67324- 3	• SLEEVE, WING SLAT TORQUE TUBE	3	
		ATTACHING PARTS		
- 2	AN23-19A	• BOLT	12	
	AN960D10	• WASHER	12	
	AN364-1032	• NUT	12	
		¤----¤-¤-¤----¤		
- 3	25-67330- 3	• JOINT, WING SLAT UNIVERSAL, ALTERED FROM UJ364 (APX)	3	
- 4	25-67325- 3	• CONNECTOR, WING SLAT TORQUE TUBE	2	
		ATTACHING PARTS		
- 5	AN23-19A	• BOLT	6	
	AN960D10	• WASHER	6	
	AN364-1032	• NUT	6	
		¤----¤-¤-¤----¤		
- 6	25-67321- 43	• TUBE, WING SLAT TORQUE, LEFT SIDE	1	
- 7	25-67321- 23	• TUBE, WING SLAT TORQUE, CENTER	1	
- 8	25-67330- 3	• JOINT, WING SLAT UNIVERSAL, ALTERED FROM UJ364 (APX)	1	
		ATTACHING PARTS		
- 9	AN393-25	• PIN, FLAT HEAD	1	
	AN960D10L	• WASHER	1	
	AN380-2-1	• PIN, COTTER	1	
		¤----¤-¤-¤----¤		
- 10	25-67331- 5	• JOINT, WING SLAT BULKHEAD UNIV, ALTERED FROM 01-0052 (AS)	1	
		ATTACHING PARTS		
- 11	AN3-4A	• BOLT	3	
	AN960-10L	• WASHER	3	
		¤----¤-¤-¤----¤		
- 12	25-67320- 3	• FITTING, WING SLAT TORQUE TUBE END	1	
		ATTACHING PARTS		
- 13	AN23-19A	• BOLT	2	
	AN960D10	• WASHER	2	
	AN364-1032	• NUT	2	
		¤----¤-¤-¤----¤		
- 14	25-67342- 3	• TUBE, WING SLAT TORQUE, RIGHT SIDE	1	
		ATTACHING PARTS		
- 15	AN23-19A	• BOLT	2	
	AN960D10	• WASHER	2	
	AN364-1032	• NUT	2	
		¤----¤-¤-¤----¤		
- 16	25-67341- 3	• TUBE, WING SLAT TORQUE REDUCER°	1	
		ATTACHING PARTS		
- 17	AN23-17A	• BOLT	2	
	AN960D10	• WASHER	2	
	AN364-1032	• NUT	2	
		¤----¤-¤-¤----¤		
- 18	25-67331- 3	• JOINT, WING SLAT BULKHEAD UNIV, ALTERED FROM 01-0052 (AS)	1	
		ATTACHING PARTS		
- 19	AN3-4A	• BOLT	3	
	AN960-10L	• WASHER	3	
		¤----¤-¤-¤----¤		
- 20	11282-1	• GEARBOX, SLAT DRIVE (KY) MCDONNELL SPEC 25-69258-1	1	
		ATTACHING PARTS		
- 21	AN3-6A	• BOLT	3	
	AN960D10L	• WASHER	3	
	AN960D10	• WASHER	6	
	AN365-1032	• NUT	3	
	AN3-7A	• BOLT, LOWER FWD	1	
	AN960D10L	• WASHER	1	
	AN960D10	• WASHER	2	
	AN365-1032	• NUT	1	
		¤----¤-¤-¤----¤		
- 22	11283-1	• GEARBOX, SLAT DRIVE (KY) MCDONNELL SPEC 25-69258-3	1	

FIGURE & INDEX NUMBER	PART NUMBER	1 2 3 4 5 6 7 DESCRIPTION	UNITS PER ASS'Y	USABLE ON CODE
60 -		ATTACHING PARTS		
- 23	AN3-25A	• BOLT	2	
	AN960D10L	• WASHER	2	
	AN960D10	• WASHER	4	
	AN365-1032	• NUT	2	
		¤----¤-¤-¤----¤		
- 24	25-67359- 1	• BRACKET ASSEMBLY, SLAT CONTROL GEARBOX	1	
- 25	MS21908D4	• ELBOW	1	
	AN6290-4	• GASKET, USE WITH INDEX 25	1	
	AN6291-4	• RING, BACK UP, USE WITH INDEX 25	1	
	AN6289D4	• NUT, USE WITH INDEX 25	1	
- 26	MS21902D8	• UNION	2	
	AN6290-8	• GASKET, USE WITH INDEX 26	2	
- 27	MF9-3911-30Z	• MOTOR, HYDRAULIC (VI) NAVA 03-30CH-522	1	
		ATTACHING PARTS		
- 28	AN5H6A	• BOLT	2	
	AN960D516	∘ WASHER	2	
- 29	AN5-31A	• BOLT	2	
	AN960D516L	∘ WASHER	2	
	AN960D516	• WASHER	4	
	AN365-524	• NUT	2	
		¤----¤-¤-¤----¤		
- 30	11284	• GEARBOX, SLAT MOTOR (KY) MCDONNELL SPEC 25-69257-1	1	
		ATTACHING PARTS		
- 31	AN5-27A	• BOLT	2	
	AN960D516	• WASHER	6	
	AN365-524	• NUT	2	
		¤----¤-¤-¤----¤		

FIGURE & INDEX NUMBER	PART NUMBER	1 2 3 4 5 6 7 DESCRIPTION	UNITS PER ASS'Y	USABLE ON CODE
61 -	25-54100- 1	CONTROLS INSTALLATION, FORWARD FUSELAGE ENGINE, SEE FIG. 44-15 FOR NEXT HIGHER ASSEMBLY	REF	
- 1	25-61037- 25	• ROD ASSEMBLY, CONTROLS	1	
		ATTACHING PARTS		
- 2	NAS464-4A14	• BOLT	2	
	AN960D416L	• WASHER	4	
	AN364-428	• NUT	2	
		¤----¤-¤-¤----¤		
- 3	RE4M6	• • BEARING, ROD END (FAF)	1	
- 4	AN316-6R	• • NUT	1	
	25-61037-125	• • ROD ASSEMBLY	1	
- 5	25-61073- 3	• • • ADAPTER, ADJUSTABLE ROD END	1	
- 6	RE4H6	• • • BEARING, ROD END (FAF)	1	
- 7	25-61070- 3	• • • ADAPTER, ROD END	1	
- 8	25-61037-225	• • • TUBE	1	
- 9	25-61076- 3	• RING, ENGINE CONTROLS COCKPIT SEAL	1	
		ATTACHING PARTS		
- 10	AN3-4A	• SCREW	10	
	AN960D10L	• WASHER	20	
	AN364-1032	• NUT	10	
		¤----¤-¤-¤----¤		
- 11	25-61040- 1	• SEAL ASSEMBLY, ENGINE CONTROLS COCKPIT	1	
- 12	A3122-18-59	• CLAMP (TIN)	1	
- 13	25-54103- 1	• BELL CRANK ASSEMBLY, ENGINE CONTROLS	1	
		ATTACHING PARTS		
- 14	NAS464-5A21	• BOLT	1	
	AN960D516L	• WASHER	1	
	AN960D516	• WASHER	1	
	AN364-524	• NUT	1	
		¤----¤-¤-¤----¤		
	DW5	• BEARING (FAF)	1	
- 15	25-61037- 27	• ROD ASSEMBLY, CONTROLS	1	
		ATTACHING PARTS		
- 16	NAS464-4A14	• BOLT	1	
	AN960D416L	• WASHER	2	
	AN364-428	• NUT	1	
- 17	NAS464-4A15	• BOLT	1	
	AN960D416L	• WASHER	2	
	AN364-428	• NUT	1	
		¤----¤-¤-¤----¤		
- 18	RE4M6	• • BEARING, ROD END (FAF)	1	
- 19	AN316-6R	• • NUT	1	
	25-61037-127	• • ROD ASSEMBLY	1	
- 20	25-61073- 3	• • • ADAPTER, ADJUSTABLE ROD END	1	
- 21	RE4H6	• • • BEARING, ROD END (FAF)	1	
- 22	25-61070- 3	• • • ADAPTER, ROD END	1	
- 23	25-61037-227	• • • TUBE	1	
- 24	25-61009- 1	• BELL CRANK ASSEMBLY, ENGINE CONTROLS	1	
		ATTACHING PARTS		
- 25	NAS464-4A18	• BOLT	1	
	AN960D416L	• WASHER	1	
	AN960D416	• WASHER	1	
	AN364-428	• NUT	1	
		¤----¤-¤-¤----¤		
	DW4	• • BEARING (FAF)	1	
- 26	25-61037- 29	• ROD ASSEMBLY, CONTROLS	1	
		ATTACHING PARTS		
- 27	NAS464-4A15	• BOLT	1	
	AN960D416L	• WASHER	2	
	AN364-428	• NUT	1	
- 28	NAS464-4A14	• BOLT	1	
	AN960D416L	• WASHER	2	
	AN364-428	• NUT	1	
		¤----¤-¤-¤----¤		
- 29	RE4M6	• • BEARING, ROD END (FAF)	1	
- 30	AN316-6R	• • NUT	1	
	25-61037-129	• • ROD ASSEMBLY	1	
- 31	25-61073- 3	• • • ADAPTER, ADJUSTABLE ROD END	1	
- 32	RE4H6	• • • BEARING, ROD END (FAF)	1	
- 33	25-61070- 3	• • • ADAPTER, ROD END	1	
- 34	25-61037-229	• • • TUBE	1	

Forward Fuselage

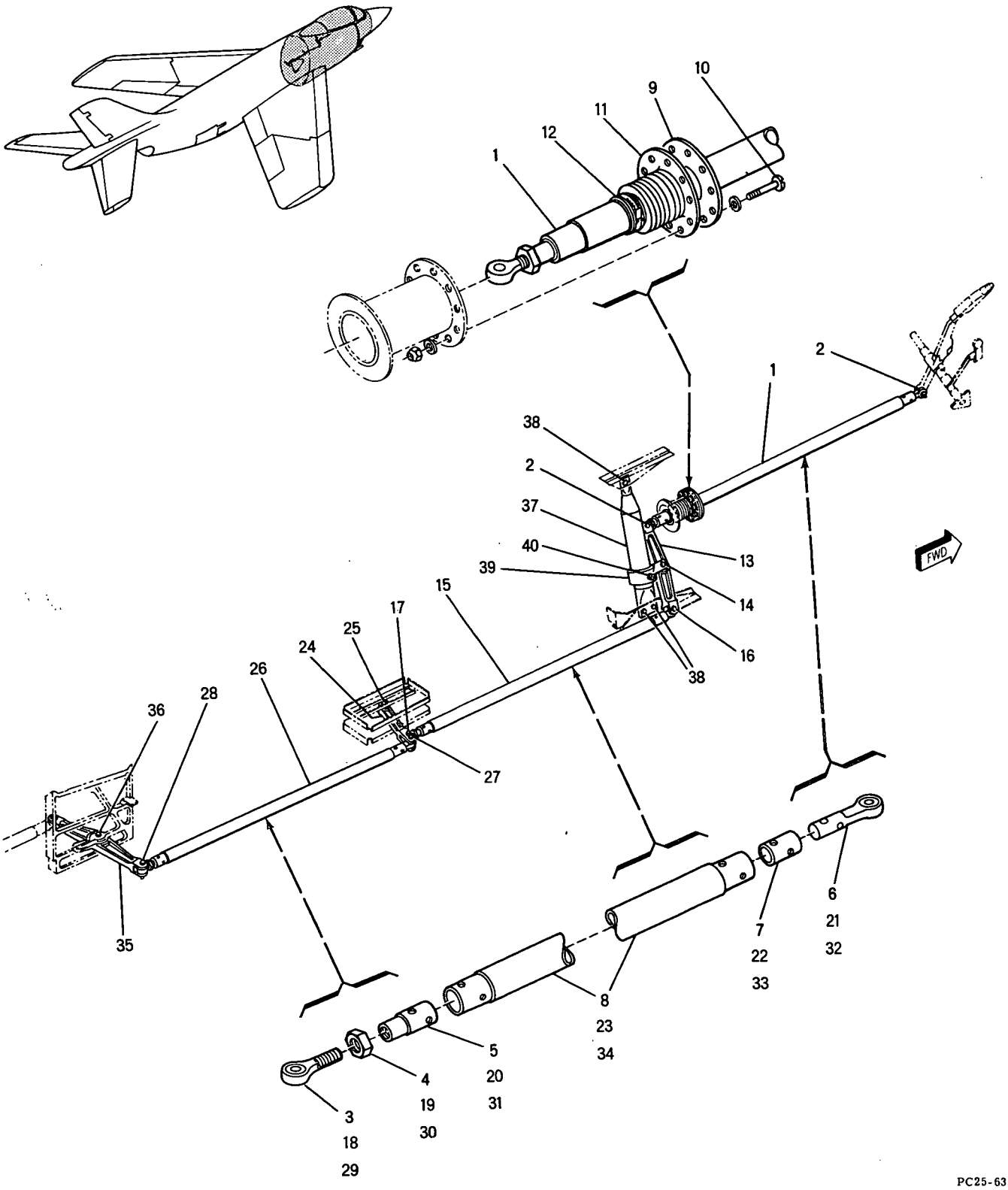

Figure 61 - Forward Fuselage Engine Controls Installation

FIGURE & INDEX NUMBER	PART NUMBER	1 2 3 4 5 6 7 DESCRIPTION	UNITS PER ASS'Y	USABLE ON CODE
61 - 35	25-54102- 1	• BELL CRANK ASSEMBLY, ENGINE CONTROLS	1	
		ATTACHING PARTS		
- 36	NAS464-6-69	• BOLT, SEE FIG. 55-63	REF	
	AN960D616	• WASHER	REF	
	AN320-6	• NUT	REF	
	AN380-3-3	• PIN, COTTER	REF	
		¤----¤-¤-¤----¤		
	DW6	• • BEARING (FAF)	1	
- 37	25-54107- 1	• SUPPORT ASSEMBLY, ENGINE CONTROLS BELL CRANK	1	
		ATTACHING PARTS		
- 38	AN4-11A	• BOLT	3	
	AN960D416L	• WASHER	3	
	AN960D416	• WASHER	3	
	AN364-428	• NUT	3	
		¤----¤-¤-¤----¤		
- 39	25-54106- 3	• • SUPPORT, ENGINE CONTROLS BELL CRANK	1	
		ATTACHING PARTS		
- 40	AN4-26A	• • BOLT	1	
	AN960D416L	• • WASHER	1	
	AN960D416	• • WASHER	2	
	AN365-428	• • NUT	1	
		¤----¤-¤-¤----¤		

Forward Fuselage

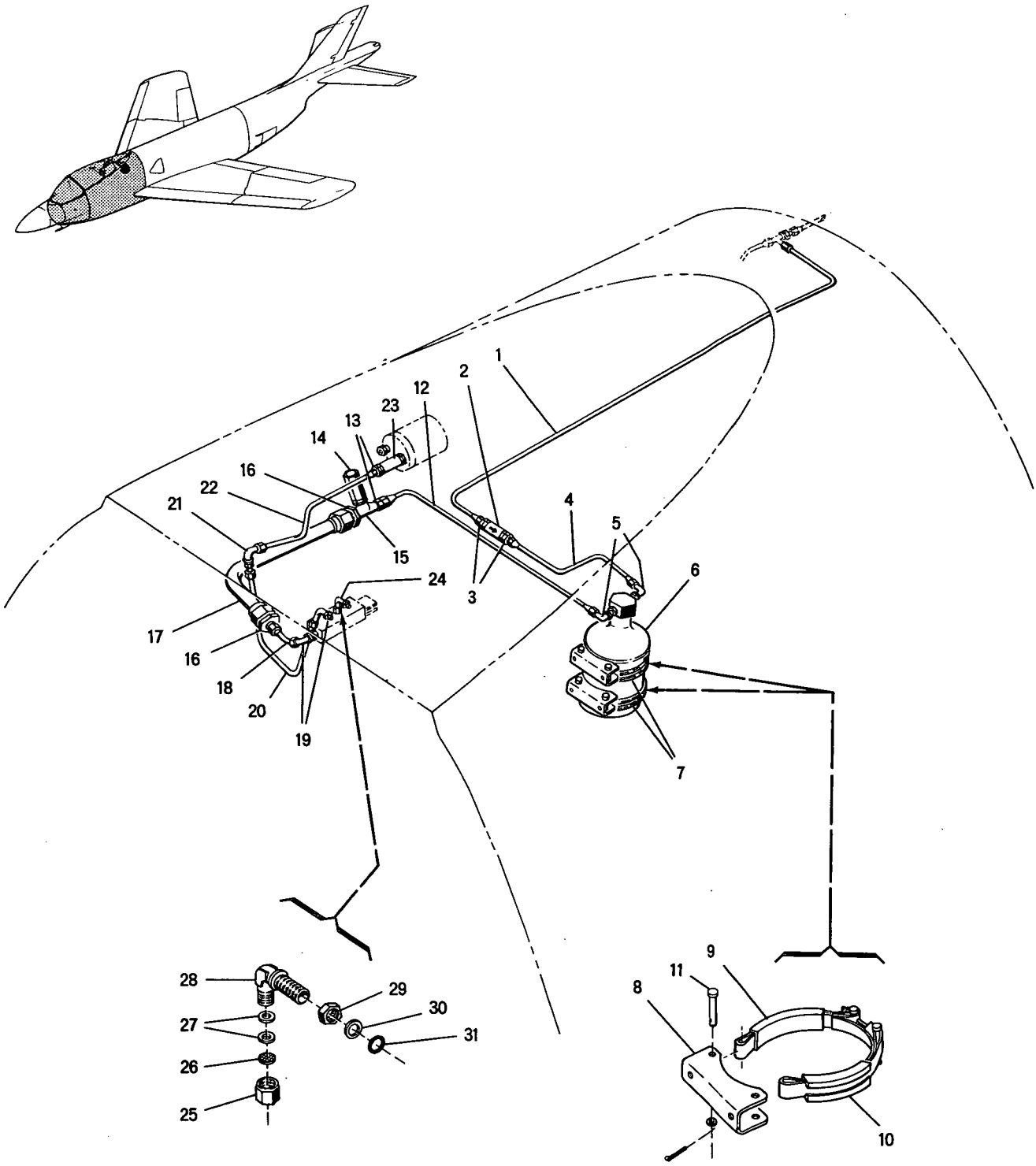

PC25-64

Figure 62 - Canopy Mechanism Pneumatic Installation

FIGURE & INDEX NUMBER	PART NUMBER	1 2 3 4 5 6 7 DESCRIPTION	UNITS PER ASS'Y	USABLE ON CODE
62 -	25-72014- 1	PNEUMATIC INSTALLATION, CANOPY MECHANISM, SEE FIG. 44-8 FOR NEXT HIGHER ASSEMBLY	REF	
- 1	25-72016- 21	• TUBE ASSEMBLY, CANOPY EMERGENCY AIR	1	
- 2	299A4BB	• VALVE, CHECK (JAPC)	1	
- 3	MS21902D4	• UNION	2	
	AN6290-4	• GASKET, USE WITH INDEX 3	2	
- 4	25-72016- 5	• TUBE ASSEMBLY, CANOPY MECHANISM PNEUMATIC	1	
- 5	MS21908D4	• ELBOW	2	
	AN6290-4	• GASKET, USE WITH INDEX 5	2	
	AN6291-4	• RING, BACK UP, USE WITH INDEX 5	2	
	AN6289D4	• NUT, USE WITH INDEX 5	2	
- 6	870525	• BOTTLE ASSEMBLY (WK)	1	
- 7	25-72017- 1	• SUPPORT ASSEMBLY, AIR CYLINDER	2	
		ATTACHING PARTS		
	AN3-5A	• BOLT	4	
	AN960D10	• WASHER	4	
		¤----¤-¤-¤----¤		
- 8	25-72017- 5	• • SUPPORT	1	
- 9	15524-10	• • STRAP ASSY (MAR)	1	
- 10	15524-12	• • STRAP ASSY (MAR)	1	
		ATTACHING PARTS		
- 11	AN393-45	• • PIN, FLAT HEAD	2	
	AN380-2-2	• • PIN, COTTER	2	
	AN960D10L	• • WASHER	2	
		¤----¤-¤-¤----¤		
- 12	25-72016- 7	• TUBE ASSEMBLY, CANOPY EMERGENCY AIR	1	
- 13	MS21902D4	• UNION	2	
	AN6290-4	• GASKET, USE WITH INDEX 13	2	
- 14	MC1603	• VALVE, AIR PRESSURE RELIEF (MCY) MCDONNELL SPEC 25-72002-1	1	
	AN6290-4	• GASKET, USE WITH INDEX 14	1	
- 15	AN938D4	• TEE	1	
	AN6290-4	• GASKET, USE WITH INDEX 15	1	
- 16	MS21916D12-4	• REDUCER	2	
- 17	25-72016- 19	• TUBE ASSEMBLY, CANOPY EMERGENCY AIR	1	
- 18	25-72016- 9	• TUBE ASSEMBLY, CANOPY EMERGENCY AIR	1	
- 19	MS21908D4	• ELBOW	2	
	AN6290-4	• GASKET, USE WITH INDEX 19	2	
	AN6291-4	• RING, BACK UP, USE WITH INDEX 19	2	
	AN6289D4	• NUT, USE WITH INDEX 19	2	
- 20	25-72016- 11	• TUBE ASSEMBLY, CANOPY EMERGENCY AIR	1	
- 21	MS21908D4	• ELBOW	1	
	AN924-4D	• NUT, USE WITH INDEX 21	1	
	AN960D716	• WASHER, USE WITH INDEX 21	1	
- 22	25-72016- 17	• TUBE ASSEMBLY, CANOPY EMERGENCY AIR	1	
- 23	82-100-113	• RESTRICTOR (GPPI)	1	
	AN6290-4	• GASKET, USE WITH INDEX 23	1	
- 24	25-72028- 1	• VENT ASSEMBLY, PNEUMATIC	1	
- 25	AN818-4D	• • NUT	1	
- 26	25-72029- 3	• • SCREEN, VENT ASSY	1	
- 27	AN960D8	• • WASHER	2	
- 28	MS21908D4	• • ELBOW	1	
- 29	AN6289D4	• NUT	1	
- 30	AN6291-4	• RING, BACK UP	1	
- 31	AN6290-4	• GASKET	1	

Forward Fuselage

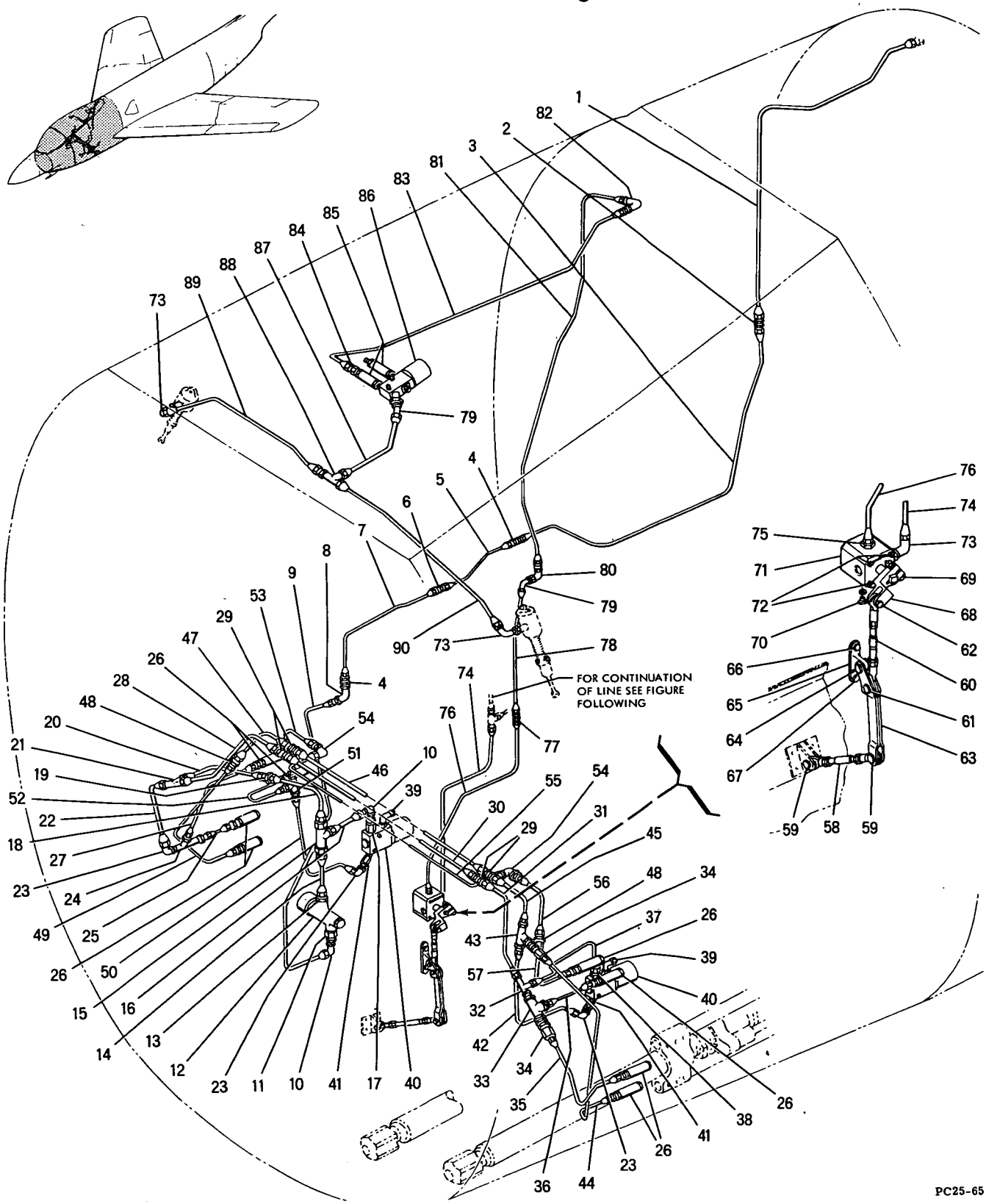

Figure 63 -- MK 12 Gun Pneumatic Installation (Gun Ready, Gun Buffer, Gun Charge and Gun Bay Vent Door)

FIGURE & INDEX NUMBER	PART NUMBER	1 2 3 4 5 6 7 DESCRIPTION	UNITS PER ASS'Y	USABLE ON CODE
63 -	25-72003- 1	PNEUMATIC INSTALLATION, MK 12 GUN, BUFFER & READY AIR, GUN CHARGE AND GUN BAY VENT DOOR, SEE FIG. 44-13 FOR NEXT HIGHER ASSEMBLY	REF	
- 1	25-72005- 77	• TUBE ASSY, GUN BUFFER & READY AIR	1	
- 2	MS21903D8	• UNION	1	
	AN924-8D	• NUT, USE WITH INDEX 2	1	
	AN960D1216	• WASHER, USE WITH INDEX 2	1	
- 3	25-72005- 5	• TUBE ASSY, GUN BUFFER & READY AIR	1	
- 4	MS21903D8	• UNION	2	
	AN924-8D	• NUT, USE WITH INDEX 4	2	
- 5	25-72005- 7	• TUBE ASSY, GUN BUFFER & READY AIR	1	
- 6	MS21903D8	• UNION	1	
	AN924-8D	• NUT, USE WITH INDEX 6	1	
	25-69167- 9	• SPACER, TUBE MOUNTING, USE WITH INDEX 6	1	
- 7	25-72005- 9	• TUBE ASSY, GUN BUFFER & READY AIR	1	
- 8	AN939D8	• ELBOW	1	
	AN6289D8	• NUT, USE WITH INDEX 8	1	
	AN6291-8	• RING, BACK UP, USE WITH INDEX 8	1	
	AN6290-8	• GASKET, USE WITH INDEX 8	2	
	MS21902D8	• UNION, USE WITH INDEX 8	1	
- 9	25-72005- 91	• TUBE ASSY, GUN BUFFER & READY AIR	1	
- 10	MS21908D8	• ELBOW	2	
	AN6289D8	• NUT, USE WITH INDEX 10	2	
	AN6291-8	• RING, BACK UP, USE WITH INDEX 10	2	
	AN6290-8	• GASKET, USE WITH INDEX 10	2	
- 11	MS21915D8-6	• BUSHING	1	
	AN6290-6	• GASKET, USE WITH INDEX 11	1	
- 12	178-1018-1000	• REGULATOR, AIR PRESSURE (HUG) MCDONNELL SPEC 23-72003	1	
		ATTACHING PARTS		
	AN3-31A	• BOLT	2	
	AN960D10	• WASHER	2	
	25-72031- 7	• SPACER, PNEUMATIC PRESSURE REGULATOR MOUNTING	1	
		¤----¤-¤-¤----¤		
- 13	MS21902D8	• UNION	1	
	AN6290-8	• GASKET, USE WITH INDEX 13	1	
- 14	25-72005-113	• TUBE ASSY, GUN BUFFER & READY AIR	1	
- 15	MS21905D8	• TEE	1	
- 16	25-72005-117	• TUBE ASSY, GUN CHARGE AIR	1	
- 17	MS21915D8-4	• BUSHING	1	
	AN6290-4	• GASKET, USE WITH INDEX 17	1	
- 18	25-72005-115	• TUBE ASSY, GUN BUFFER & READY AIR	1	
- 19	MS21916D8-6	• REDUCER	1	
- 20	25-72005-121	• TUBE ASSY, GUN BUFFER & READY AIR	1	
- 21	MS21905D6	• TEE	1	
- 22	25-72005-101	• TUBE ASSY, GUN BUFFER & READY AIR	1	
- 23	MS21908D6	• ELBOW	3	
	AN6289D6	• NUT, USE WITH INDEX 23	3	
	AN6291-6	• RING, BACK UP, USE WITH INDEX 23	3	
	AN6290-6	• GASKET, USE WITH INDEX 23	3	
- 24	AN938D6	• TEE	1	
	MS21916D6-4	• REDUCER, USE WITH INDEX 24	2	
	AN6290-6	• GASKET, USE WITH INDEX 24	2	
- 25	25-72005- 29	• TUBE ASSY, GUN BUFFER & READY AIR	1	
- 26	59000-5	• PLUG ASSEMBLY (ESSX)	8	
	AN924-4D	• NUT, USE WITH INDEX 26	8	
- 27	25-72005-103	• TUBE ASSY, GUN BUFFER & READY AIR	1	
- 28	25-72036- 17	• TUBE ASSY, GUN BUFFER & READY AIR	1	
- 29	MS21903D6	• UNION	4	
	AN924-6D	• NUT, USE WITH INDEX 29	4	
- 30	25-72036- 15	• TUBE ASSY, GUN BUFFER & READY AIR	1	
- 31	25-72036- 13	• TUBE ASSY, GUN BUFFER & READY AIR	1	
- 32	MS21912D6	• TEE	1	
	AN6289D6	• NUT, USE WITH INDEX 32	1	
	AN6291-6	• RING, BACK UP, USE WITH INDEX 32	1	
	AN6290-6	• GASKET, USE WITH INDEX 32	1	
- 33	AN938D6	• TEE	1	
	MS21916D6-4	• REDUCER, USE WITH INDEX 33	1	
	AN6290-6	• GASKET, USE WITH INDEX 33	2	
	MS21903D6	• UNION, USE WITH INDEX 33	1	
	AN924-6D	• NUT, USE WITH INDEX 33	1	
- 34	MS21915D6-4	• BUSHING	2	
	AN6289D6	• NUT, USE WITH INDEX 34	2	
	AN6291-6	• RING, BACK UP, USE WITH INDEX 34	2	
	AN6290-6	• GASKET, USE WITH INDEX 34	2	
- 35	25-72005- 79	• TUBE ASSY, GUN READY AIR	1	
- 36	25-72005- 39	• TUBE ASSY, GUN BUFFER & READY AIR	1	
- 37	25-72005-111	• TUBE ASSY, GUN CHARGE AIR	1	

FIGURE & INDEX NUMBER	PART NUMBER	1 2 3 4 5 6 7 DESCRIPTION	UNITS PER ASS'Y	USABLE ON CODE
63 - 38	MS21916D6-4	• REDUCER	1	
	AN6290-4	• GASKET, USE WITH INDEX 38	1	
- 39	25-72028- 1	• VENT ASSY, PNEUMATIC	2	
	AN818-4D	• • NUT	1	
	25-72029- 3	• • SCREEN, VENT ASSY	1	
	AN960D8	• • WASHER	2	
	MS21908D4	• • ELBOW	1	
	AN6289D4	• NUT, USE WITH INDEX 39	2	
	AN6291-4	• RING, BACK UP, USE WITH INDEX 39	2	
	AN6290-4	• GASKET, USE WITH INDEX 39	2	
- 40	202013	• VALVE (MAGH)	2	
		ATTACHING PARTS		
	AN3H17A	• BOLT	4	
	AN960D10	• WASHER	4	
	NAS43DD3-20	• SPACER	4	
		¤----¤-¤-¤----¤		
- 41	MS21915D6-4	• BUSHING	2	
	AN6290-4	• GASKET, USE WITH INDEX 41	2	
- 42	25-72036- 3	• TUBE ASSY, GUN CHARGE AIR	1	
- 43	AN938D6	• TEE	1	
	MS21902D6	• UNION, USE WITH INDEX 43	2	
	MS21903D6	• UNION, USE WITH INDEX 43	1	
	AN6290-6	• GASKET, USE WITH INDEX 43	3	
	AN924-6D	• NUT, USE WITH INDEX 43	1	
- 44	25-72005- 87	• TUBE ASSY, GUN CHARGE AIR	1	
- 45	25-72036- 5	• TUBE ASSY, GUN CHARGE AIR	1	
- 46	25-72036- 7	• TUBE ASSY, GUN CHARGE AIR	1	
- 47	25-72036- 9	• TUBE ASSY, GUN CHARGE AIR	1	
- 48	MS21916D6-4	• REDUCER	2	
- 49	25-72036- 11	• TUBE ASSY, GUN CHARGE AIR	1	
- 50	25-72005-107	• TUBE ASSY, GUN CHARGE AIR	1	
- 51	AN938D6	• TEE	1	
	MS21916D6-4	• REDUCER, USE WITH INDEX 51	1	
	MS21902D6	• UNION, USE WITH INDEX 51	2	
	AN6290-6	• GASKET, USE WITH INDEX 51	3	
- 52	25-72005-109	• TUBE ASSY, GUN CHARGE AIR	1	
- 53	25-72036- 21	• TUBE ASSY, GUN CHARGE AIR	1	
- 54	MS21908D6	• ELBOW	2	
	AN924-6D	• NUT, USE WITH INDEX 54	2	
	AN960D916	• WASHER, USE WITH INDEX 54	2	
- 55	25-72036- 19	• TUBE ASSY, GUN CHARGE AIR	1	
- 56	25-72036- 23	• TUBE ASSY, GUN CHARGE AIR	1	
- 57	25-72005- 73	• TUBE ASSY, GUN CHARGE AIR	1	
- 58	25-72052- 2	• LINK ASSY, GUN BAY VENT VALVE	1	
		ATTACHING PARTS		
- 59	AN3-10A	• BOLT	2	
	AN960D10L	• WASHER	2	
	AN960D10	• WASHER	2	
	AN365-1032	• NUT	2	
		¤----¤-¤-¤----¤		
	H3FN	• • BEARING, ROD END (HLF)	2	
	AN316-4R	• • NUT, CHECK	2	
	25-72052- 5	• • TURNBUCKLE	1	
- 60	25-72052- 1	• LINK ASSY, GUN BAY VENT VALVE	1	
		ATTACHING PARTS		
- 61	AN3-10A	• BOLT	1	
	AN960D10L	• WASHER	1	
	AN960D10	• WASHER	1	
	AN365-1032	• NUT	1	
- 62	AN3-11A	• BOLT	1	
	AN960D10L	• WASHER	1	
	AN960D10	• WASHER	2	
	AN365-1032	• NUT	1	
		¤----¤-¤-¤----¤		
	H3FN	• • BEARING, ROD END (HLF)	1	
	AN316-4R	• • NUT, CHECK	1	
	25-72052- 3	• • TURNBUCKLE	1	
- 63	25-72053- 1	• ARM ASSY, GUN BAY VENT VALVE	1	
		ATTACHING PARTS		
- 64	AN3-10A	• BOLT	1	
	AN960D10L	• WASHER	1	
	NAS74A3-007	• BUSHING	1	
	AN960D10	• WASHER	1	
	AN365-1032	• NUT	1	
		¤----¤-¤-¤----¤		

FIGURE & INDEX NUMBER	PART NUMBER	1 2 3 4 5 6 7 DESCRIPTION	UNITS PER ASS'Y	USABLE ON CODE
63 - 65	25-72050- 1	• LUG ASSY, GUN BAY VENT VALVE	1	
		ATTACHING PARTS		
- 66	AN3-6A	• BOLT	1	
	AN960D10L	• WASHER	1	
	AN960D10	• WASHER	1	
	AN365-1032	• NUT	1	
- 67	AN3-10A	• BOLT	1	
	AN960D10L	• WASHER	1	
	AN960D10	• WASHER	1	
	AN365-1032	• NUT	1	
		¤----¤-¤-¤----¤		
	NAS516-1	• • FITTING, LUB	1	
	4M33P6-013	• • BUSHING (MDA)	1	
- 68	25-72051- 1	• ARM ASSY, GUN BAY VENT VALVE	1	
- 69	AN3-11A	• • BOLT	1	
	AN960D10L	• • WASHER	1	
	AN960D10	• • WASHER	1	
	AN365-1032	• • NUT	1	
- 70	MS21913D4	• PLUG	1	
	AN6290-4	• GASKET, USE WITH INDEX 70	1	
- 71	70000-20	• VALVE, PNEUMATIC, FOUR WAY SEQUENCE(HYRM) MCDONNELL SPEC 25-69345-3	1	
		ATTACHING PARTS		
- 72	AN502-10-6	• SCREW	4	
	AN960D10	• WASHER	4	
		¤----¤-¤-¤----¤		
- 73	MS21908D4	• ELBOW	3	
	AN6289D4	• NUT, USE WITH INDEX 73	3	
	AN6291-4	• RING, BACK UP, USE WITH INDEX 73	3	
	AN6290-4	• GASKET, USE WITH INDEX 73	3	
- 74	25-72008- 47	• TUBE ASSY, GUN BAY VENT	1	
- 75	MS21902D4	• UNION	1	
	AN6290-4	• GASKET, USE WITH INDEX 75	1	
- 76	25-72008- 71	• TUBE ASSY, GUN BAY VENT	1	
- 77	MS21903D4	• UNION	1	
	AN924-4D	• NUT, USE WITH INDEX 77	1	
- 78	25-72008- 69	• TUBE ASSY, GUN BAY VENT	1	
- 79	MS21907D4	• ELBOW	2	
	AN6289D4	• NUT, USE WITH INDEX 79	2	
	AN6291-4	• RING, BACK UP, USE WITH INDEX 79	2	
	AN6290-4	• GASKET, USE WITH INDEX 79	2	
- 80	AN939-4D	• ELBOW	1	
	AN6290-4	• GASKET, USE WITH INDEX 80	1	
	MS21903D4	• UNION, USE WITH INDEX 80	1	
	25-69167- 7	• SPACER, USE WITH INDEX 80	1	
	AN924-4D	• NUT, USE WITH INDEX 80	1	
- 81	25-72008- 53	• TUBE ASSY, GUN BAY VENT	1	
- 82	AN939D4	• ELBOW	1	
	AN6290-4	• GASKET, USE WITH INDEX 82	2	
	MS21902D4	• UNION, USE WITH INDEX 82	1	
	MS21903D4	• UNION, USE WITH INDEX 82	1	
	25-69167- 7	• SPACER, TUBE MOUNTING, USE WITH INDEX 82	1	
	AN924-4D	• NUT, USE WITH INDEX 82	1	
- 83	25-72008- 55	• TUBE ASSY, GUN BAY VENT	1	
- 84	ER894D4-4	• ADAPTER (WH)	1	
	AN6290-4	• GASKET, USE WITH INDEX 84	1	
- 85	31-100-015	• RESTRICTOR (GPPI)	2	
	AN6290-4	• GASKET, USE WITH INDEX 85	2	
- 86	202013	• VALVE (MAGH)	1	
		ATTACHING PARTS		
	AN3H17A	• BOLT	2	
	AN960D10	• WASHER	2	
	NAS43DD3-24	• SPACER	2	
		¤----¤-¤-¤----¤		
- 87	25-72008- 57	• TUBE ASSY, GUN BAY VENT DOOR	1	
- 88	MS21912D4	• TEE	1	
	AN924-4D	• NUT, USE WITH INDEX 88	1	
	AN960D716	• WASHER, USE WITH INDEX 88	1	
- 89	25-72008- 59	• TUBE ASSY, GUN BAY VENT DOOR	1	
- 90	25-72008- 61	• TUBE ASSY, GUN BAY VENT DOOR	1	

Forward Fuselage

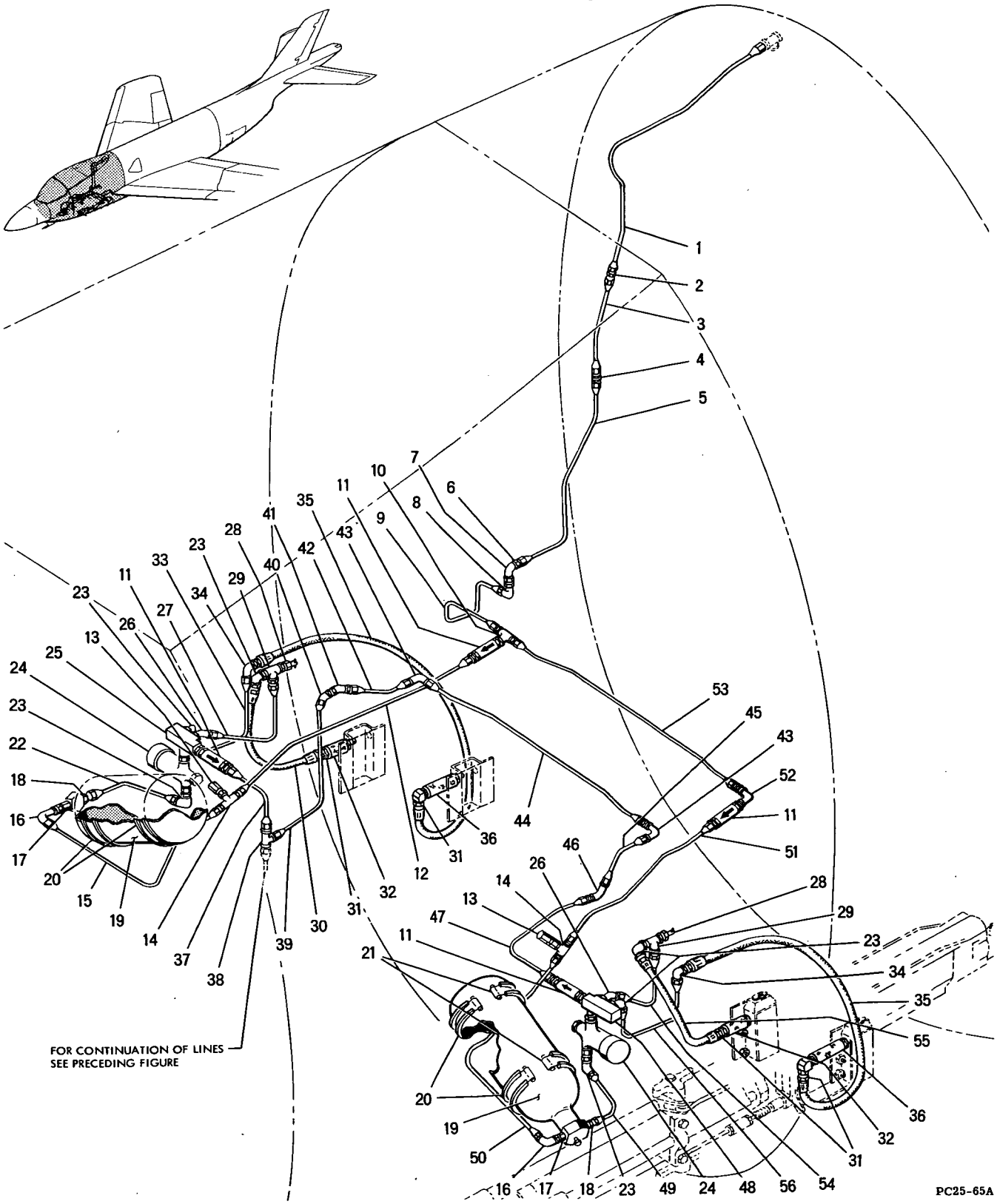

Figure 64 -- MK 12 Gun Pneumatic Installation (Gun Feeder)

FIGURE & INDEX NUMBER	PART NUMBER	1 2 3 4 5 6 7 DESCRIPTION	UNITS PER ASS'Y	USABLE ON CODE
64 -	25-72003- 1	PNEUMATIC INSTALLATION, MK 12 GUN FEEDER, SEE FIG. 44-13 FOR NEXT HIGHER ASSEMBLY	REF	
- 1	25-72008- 67	. TUBE ASSEMBLY, GUN FEEDER AIR	1	
- 2	MS21902D4	. UNION	1	
- 3	25-72008- 73	. TUBE ASSEMBLY, GUN FEEDER AIR	1	
- 4	MS21903D4	. UNION	1	
	AN924-4D	. NUT, USE WITH INDEX 4	1	
	AN960D716	. WASHER, USE WITH INDEX 4	1	
- 5	25-72008- 5	. TUBE ASSEMBLY, GUN FEEDER AIR	1	
- 6	MS21902D4	. UNION	1	
	AN6290-4	. GASKET, USE WITH INDEX 6	1	
- 7	AN939D4	. ELBOW	1	
	AN6290-4	. GASKET, USE WITH INDEX 7	1	
	AN6291-4	. RING, BACK UP, USE WITH INDEX 7	1	
	AN6289D4	. NUT, USE WITH INDEX 7	1	
- 8	MS21908D4	. ELBOW	1	
	AN924-4D	. NUT, USE WITH INDEX 8	1	
	AN960D716L	. WASHER, USE WITH INDEX 8	1	
- 9	25-72008- 7	. TUBE ASSEMBLY, GUN FEEDER AIR	1	
- 10	AN938D4	. TEE	1	
	AN6290-4	. GASKET, USE WITH INDEX 10	3	
	MS21902D4	. UNION, USE WITH INDEX 10	1	
	MS21903D4	. UNION, USE WITH INDEX 10	1	
	AN924-4D	. NUT, USE WITH INDEX 10	1	
- 11	299A4BB	. VALVE, CHECK (JAPC)	4	
	MS21902D4	. UNION, USE WITH INDEX 11	8	
	AN6290-4	. GASKET, USE WITH INDEX 11	8	
- 12	25-72008- 31	. TUBE ASSEMBLY, GUN FEEDER AIR	1	
- 13	MC1603	. VALVE, AIR PRESSURE RELIEF (MCV) MCDONNELL SPEC 25-72002-1	2	
	AN6290-4	. GASKET, USE WITH INDEX 13	2	
- 14	AN938D4	. TEE	2	
	MS21902D4	. UNION, USE WITH INDEX 14	4	
	AN6290-4	. GASKET, USE WITH INDEX 14	4	
- 15	25-72008- 33	. TUBE ASSEMBLY, GUN FEEDER AIR	1	
- 16	MS21908D4	. ELBOW	2	
	AN6290-4	. GASKET, USE WITH INDEX 16	2	
	AN6291-4	. RING, BACK UP, USE WITH INDEX 16	2	
	AN6289D4	. NUT, USE WITH INDEX 16	2	
- 17	AN893-2D	. BUSHING	2	
	AN6290-6	. GASKET, USE WITH INDEX 17	2	
- 18	MS21902D6	. UNION	2	
	AN6290-6	. GASKET, USE WITH INDEX 18	2	
- 19	870838	. BOTTLE, AIR (WK)	2	
- 20	15542-10	. STRAP ASSEMBLY (MAR)	4	
		ATTACHING PARTS		
	AN393-41	. PIN, FLAT HEAD, UPPER	2	
	AN960D10	. WASHER	2	
	AN380-2-2	. PIN, COTTER	2	
	AN393-69	. PIN, FLAT HEAD, LOWER	2	
	NAS42DD6-20	. SPACER	4	
	AN960D10L	. WASHER	2	
	AN380-2-2	. PIN, COTTER	2	
		¤----¤-¤-¤----¤		
- 21	15542-12	. STRAP ASSEMBLY (MAR)	4	
		ATTACHING PARTS		
	AN393-41	. PIN, FLAT HEAD, UPPER	2	
	AN960D10	. WASHER	2	
	AN380-2-2	. PIN, COTTER	2	
	AN393-63	. PIN, FLAT HEAD, LOWER	2	
	NAS42DD6-20	. SPACER	4	
	AN960D10L	. WASHER	2	
	AN380-2-2	. PIN, COTTER	2	
		¤----¤-¤-¤----¤		
- 22	25-72008- 35	. TUBE ASSEMBLY, GUN FEEDER AIR	1	
- 23	MS21908D6	. ELBOW	6	
	AN6290-6	. GASKET, USE WITH INDEX 23	6	
	AN6291-6	. RING, BACK UP, USE WITH INDEX 23	6	
	AN6289D6	. NUT, USE WITH INDEX 23	6	
- 24	178-1018-600A	. REGULATOR, AIR PRESSURE (HUG) MCDONNELL SPEC 23-72004-3	2	
		ATTACHING PARTS		
	AN3-24A	. BOLT	4	
	AN960D10	. WASHER	4	
	25-72031- 3	. SPACER, PNEUMATIC PRESSURE REGULATOR MOUNTING	2	
		¤----¤-¤-¤----¤		

FIGURE & INDEX NUMBER	PART NUMBER	1 2 3 4 5 6 7 DESCRIPTION	UNITS PER ASS'Y	USABLE ON CODE
64 - 25	25-72009- 4	• MANIFOLD, GUN FEED RH	1	
	AN6290-8	• GASKET, USE WITH INDEX 25	1	
	AN6291-8	• RING, BACK UP, USE WITH INDEX 25	1	
	AN6289D8	• NUT, USE WITH INDEX 25	1	
	AN6290-4	• GASKET, USE WITH INDEX 25	1	
- 26	MS21907D6	• ELBOW	2	
	AN6290-6	• GASKET, USE WITH INDEX 26	2	
	AN6291-6	• RING, BACK UP, USE WITH INDEX 26	2	
	AN6289D6	• NUT, USE WITH INDEX 26	2	
- 27	25-72008- 65	• TUBE ASSEMBLY, GUN FEEDER AIR	1	
- 28	MS21914-6	• CAP	2	
- 29	AN938D6	• TEE	2	
	MS21902D6	• UNION, USE WITH INDEX 29	2	
	MS21903D6	• UNION, USE WITH INDEX 29	2	
	AN6290-6	• GASKET, USE WITH INDEX 29	4	
	AN924-6D	• NUT, USE WITH INDEX 29	2	
- 30	25-69195- 87	• HOSE ASSEMBLY, GUN FEEDER AIR	1	
	ER6292-6-27.25	• • HOSE ASSEMBLY (WH)	1	
- 31	ER894D6-6	• ADAPTER (WH)	4	
	AN6290-6	• GASKET, USE WITH INDEX 31	4	
- 32	103000-1	• PLUG ASSEMBLY (ESSX)	2	
	103000-3	• RECEPTACLE ASSY (ESSX) USE WITH INDEX 32	2	
	AN6290-4	• GASKET, USE WITH INDEX 32	2	
- 33	25-72008- 37	• TUBE ASSEMBLY, GUN FEEDER AIR	1	
- 34	MS21908D6	• ELBOW	2	
	AN924-6D	• NUT, USE WITH INDEX 34	2	
	AN960D916	• WASHER, USE WITH INDEX 34	2	
- 35	25-69195-137	• HOSE ASSEMBLY, GUN FEEDER AIR	2	
	ER6292-6-30.75	• • HOSE ASSEMBLY (WH)	1	
- 36	103000-4	• PLUG ASSEMBLY (ESSX)	2	
	103000-3	• RECEPTACLE ASSY (ESSX) USE WITH INDEX 36	2	
	AN6290-4	• GASKET, USE WITH INDEX 36	2	
- 37	25-72008- 41	• TUBE ASSEMBLY, GUN FEEDER AIR	1	
- 38	MS21912D4	• TEE	1	
	AN924-4D	• NUT, USE WITH INDEX 38	1	
	AN960D716	• WASHER, USE WITH INDEX 38	1	
- 39	25-72008- 43	• TUBE ASSEMBLY, GUN FEEDER AIR	1	
- 40	MS21907D4	• ELBOW	1	
	AN924-4D	• NUT, USE WITH INDEX 40	1	
	AN960D716L	• WASHER, USE WITH INDEX 40	1	
- 41	AN941D4	• ELBOW	1	
	MS21902D4	• UNION, USE WITH INDEX 41	1	
	AN6290-4	• GASKET, USE WITH INDEX 41	2	
	AN6291-4	• RING, BACK UP, USE WITH INDEX 41	1	
	AN6289D4	• NUT, USE WITH INDEX 41	1	
- 42	25-72008- 45	• TUBE ASSEMBLY, GUN FEEDER AIR	1	
- 43	MS21908D4	• ELBOW	2	
	AN924-4D	• NUT, USE WITH INDEX 43	2	
	AN960D716	• WASHER, USE WITH INDEX 43	2	
- 44	25-72008- 27	• TUBE ASSEMBLY, GUN FEEDER AIR	1	
- 45	25-72008- 25	• TUBE ASSEMBLY, GUN FEEDER AIR	1	
- 46	MS21907D4	• ELBOW	1	
	AN924-4D	• NUT, USE WITH INDEX 46	1	
	AN960D716	• WASHER, USE WITH INDEX 46	1	
- 47	25-72008- 23	• TUBE ASSEMBLY, GUN FEEDER AIR	1	
- 48	25-72009- 3	• MANIFOLD, GUN FEED LH	1	
	AN6290-8	• GASKET, USE WITH INDEX 48	1	
	AN6291-8	• RING, BACK UP, USE WITH INDEX 48	1	
	AN6289D8	• NUT, USE WITH INDEX 48	1	
	AN6290-4	• GASKET, USE WITH INDEX 48	1	
- 49	25-72008- 17	• TUBE ASSEMBLY, GUN FEEDER AIR	1	
- 50	25-72008- 15	• TUBE ASSEMBLY, GUN FEEDER AIR	1	
- 51	25-72008- 13	• TUBE ASSEMBLY, GUN FEEDER AIR	1	
- 52	AN939D4	• ELBOW	1	
	MS21903D4	• UNION, USE WITH INDEX 52	1	
	AN6290-4	• GASKET, USE WITH INDEX 52	2	
	AN924-4D	• NUT, USE WITH INDEX 52	1	
- 53	25-72008- 9	• TUBE ASSEMBLY, GUN FEEDER AIR	1	
- 54	25-72008- 63	• TUBE ASSEMBLY, GUN FEEDER AIR	1	
- 55	25-69195- 83	• HOSE ASSEMBLY, GUN FEEDER AIR	1	
	ER-6292-6-25.50	• • HOSE ASSEMBLY (WH)	1	
- 56	25-72008- 19	• TUBE ASSEMBLY, GUN FEEDER AIR	1	

FIGURE & INDEX NUMBER	PART NUMBER	1 2 3 4 5 6 7 DESCRIPTION	UNITS PER ASS'Y	USABLE ON CODE
65 -	25-83000- 1	EQUIPMENT INSTALLATION, FORWARD FUSELAGE HEAT & VENTILATING SYSTEM, SEE FIG. 44-10 FOR NEXT HIGHER ASSEMBLY	REF	A-B
	25-83000-301	EQUIPMENT INSTALLATION, FORWARD FUSELAGE HEAT & VENTILATING SYSTEM, SEE FIG. 44-10 FOR NEXT HIGHER ASSEMBLY	REF	C-F
- 1	25-83096- 3	• DUCT, WINDSHIELD DEFOGGING	1	
- 2	AN737-74	• CLAMP	2	
- 3	25-83059- 23	• TUBE ASSY, AIRSTREAM DIRECTION TRANSDUCER, 12.21 IN. LONG	1	C-F
- 4	AN832-4D	• UNION	1	C-F
	AN924-4D	• NUT, USE WITH INDEX 4	1	C-F
- 5	25-83059- 25	• TUBE ASSY, FWD FUS HEAT & VENT, 8.9 IN. LONG	1	C-F
- 6	D110	• NIPPLE (WIG)	1	
	AN924-4D	• NUT, USE WITH INDEX 6	1	C-F
- 7	25-83054- 5	• DUCT, ADAPTER TO COCKPIT COOLED AIR FLEXIBLE	1	
- 8	25-83054- 7	• DUCT, ADAPTER TO COCKPIT COOLED AIR FLEXIBLE	1	
- 9	AN737-91	• CLAMP	4	
- 10	AN737-98	• CLAMP	1	
- 11	25-83108- 3	• PLATE, SEAL HOLD DOWN	1	
		ATTACHING PARTS		
- 12	NAS229-5	• SCREW	8	
		¤----¤-¤-¤----¤		
- 13	25-83107- 1	• SEAL ASSY, COCKPIT PRESSURE DUCT FUME	1	
- 14	43980	• CLAMP, SUPPORT (MAR)	1	
		ATTACHING PARTS		
	AN4-4A	• BOLT	2	
	AN960D416L	• WASHER	2	
		¤----¤-¤-¤----¤		
- 15	PAC2472	• VALVE, FLOW & TEMPERATURE CONTROL & SHUTOFF (PC) MCDONNELL SPEC 25-83002-3	1	
- 16	AN815-6D	• UNION	1	
	AN960D916	• WASHER, USE WITH INDEX 16	1	
	AN924-6D	• NUT, USE WITH INDEX 16	1	
- 17	25-83100- 1	• PLUG ASSEMBLY, GROUND PRESSURE TEST FITTING	1	
		ATTACHING PARTS		
	AN515-6R6	• SCREW	1	
	AN960D6L	• WASHER	1	
	AN364-632	• NUT	1	
		¤----¤-¤-¤----¤		
	AN818-6D	• • NUT, COUPLING	1	
	AN960D4	• • WASHER	1	
	25-83101- 3	• • PLUG, GROUND PRESSURE TEST FITTING	1	
	15-83140	• • CHAIN ASSY, AIR INLET GROUND PRESS. TEST	1	
- 18	15-83034	• CAP ASSEMBLY, AIR INLET GROUND PRESSURE TEST	1	
	15-83139	• • GASKET, AIR INLET GROUND PRESSURE TEST	1	
	AN960PD4	• • WASHER	1	
	15-83140	• • CHAIN ASSY, AIR INLET GROUND PRESSURE TEST	1	
- 19	100899	• TUBE ASSEMBLY (FAKB)	1	
	920AL900-40	• GASKET (JM) USE WITH INDEX 19	2	
- 20	42990-3.187M4	• COUPLING (MAR)	2	
- 21	437S50	• CLAMP (AP)	1	
- 22	25-83052- 3	• DUCT, REFRIGERATION UNIT COOLING AIR INLET FLEXIBLE	1	
- 23	QS200M80S	• CLAMP (BC)	2	
- 24	25-83053- 3	• DUCT, REFRIGERATION UNIT COOLING AIR OUTLET FLEXIBLE	1	
- 25	QS200M68S	• CLAMP (BC)	2	
- 26	25-83008- 1	• UNIT ASSEMBLY, REFRIGERATION & FLOW CONTROL, SEE FIG. 66	1	
		ATTACHING PARTS		
- 27	AN4-7A	• BOLT	2	
	AN960D416	• WASHER	4	
	AN364-428	• NUT	2	
		¤----¤-¤-¤----¤		
- 28	25-80006- 1	• VALVE ASSEMBLY, ANTI-BLACKOUT	1	
		ATTACHING PARTS		
- 29	AN3-5A	• BOLT	4	
	AN960D10L	• WASHER	8	
	AN364-1032	• NUT	4	
		¤----¤-¤-¤----¤		

Forward Fuselage

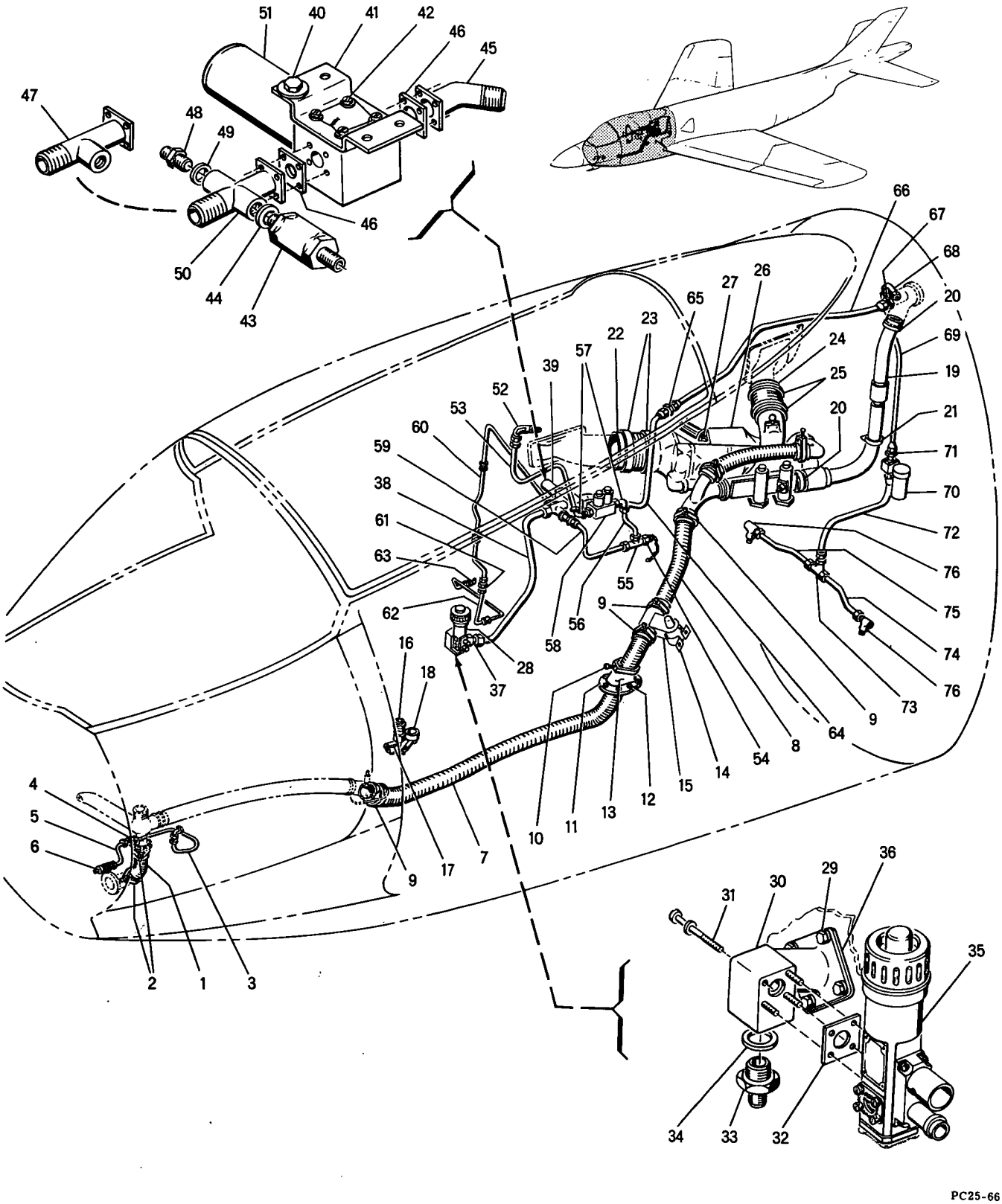

PC25-66

Figure 65 - Forward Fuselage Heat and Ventilating System Equipment Installation

FIGURE & INDEX NUMBER	PART NUMBER	1 2 3 4 5 6 7 DESCRIPTION	UNITS PER ASS'Y	USABLE ON CODE
65 - 30	25-80053- 3	• • SUPPORT, ANTI-BLACKOUT VALVE	1	
		ATTACHING PARTS		
- 31	AN500A6-22	• • SCREW	4	
	AN960D6	• • WASHER	4	
		¤----¤-¤-¤----¤		
- 32	15-80184	• • GASKET, ANTI-BLACKOUT FITTING	1	
- 33	AN919-10D	• • REDUCER	1	
- 34	AN901-8A	• • GASKET	1	
- 35	R83V65300	• • VALVE, REGULATING, GFP, AN6538-2, LESS INLET FITTING & MOUNTING BRACKET	1	
- 36	25-80052- 5	• GASKET, ANTI-BLACKOUT FITTING	1	
- 37	AN816-10D	• NIPPLE	1	
- 38	25-83059- 15	• TUBE ASSY, FWD FUS HEAT & VENT, 28.2 IN. LONG	1	
- 39	25-83011- 1	• FILTER ASSY, ANTI-G	1	A-B
	25-83011-301	• FILTER ASSY, ANTI-G	1	C-F
		ATTACHING PARTS		
- 40	AN3-7A	• BOLT	4	
	4M36-01015	• WASHER (MDA)	4	
	AN960D10L	• WASHER	4	
	AN364-1032	• NUT	4	
		¤----¤-¤-¤----¤		
- 41	25-83073- 3	• • BRACKET, ANTI-G FILTER SUPPORT	1	
		ATTACHING PARTS		
- 42	AN500A6-4	• • SCREW	4	
	AN960D6	• • WASHER	4	
		¤----¤-¤-¤----¤		
- 43	1111-517832	• • VALVE, CHECK (PA)	1	
- 44	AN901-4A	• • GASKET	1	
- 45	15-80462	• • FITTING, ANTI-BLACKOUT EQUIP. CONNECTION 45 DEGREE INLET PORT	1	
- 46	15-80184	• • GASKET, ANTI-BLACKOUT FITTING	2	
- 47	25-83097- 3	• • ADAPTER, ANTI-G FILTER OUTLET	1	A-B
- 48	AN815-4D	• • UNION	1	C-F
- 49	AN901-4A	• • GASKET	1	C-F
- 50	25-83106- 3	• • FITTING, ANTI-G FILTER OUTLET	1	C-F
- 51	R83F300535	• • FILTER, ANTI-BLACKOUT, GFP, AN6538-3, LESS INLET & OUTLET FITTINGS	1	
- 52	AN838-4D	• ELBOW	1	
	AN924-4D	• NUT, USE WITH INDEX 52	1	
	AN960D716	• WASHER, USE WITH INDEX 52	1	
- 53	25-83059- 21	• TUBE ASSY, FWD FUS HEAT & VENT, 16.3 IN. LONG	1	
- 54	25-83099- 1	• PLUG ASSEMBLY, CANOPY SEAL TEST FITTING	1	
		ATTACHING PARTS		
	AN515-6R6	• SCREW	1	
	AN960D6L	• WASHER	1	
	AN364-632	• NUT	1	
		¤----¤-¤-¤----¤		
	AN818-4D	• • NUT, COUPLING	1	
	AN960D4	• • WASHER	1	
	25-83098- 3	• • PLUG, CANOPY SEAL TEST FITTING	1	
	15-83140	• • CHAIN ASSY, AIR INLET GROUND PRESSURE TEST	1	
- 55	AN804D4	• TEE	1	
- 56	25-83059- 19	• TUBE ASSY, FWD FUS HEAT & VENT, 5.2 IN. LONG	1	
- 57	AN833-4D	• ELBOW	2	
	AN901-4A	• GASKET, USE WITH INDEX 57	2	
	AN924-4D	• NUT, USE WITH INDEX 57	2	
- 58	100700	• VALVE, CANOPY SEAL CONTROL UNIT (AEDS) MCDONNELL SPEC 25-83022-1	1	
		ATTACHING PARTS		
	AN3-16A	• BOLT	2	
	AN960D10L	• WASHER	2	
	AN364-1032	• NUT	2	
		¤----¤-¤-¤----¤		
- 59	25-83059- 17	• TUBE ASSY, FWD FUS HEAT & VENT, 8.2 IN. LONG	1	
- 60	25-83059- 27	• TUBE ASSY, FWD FUS HEAT & VENT, 55.7 IN. LONG	1	C-F
- 61	AN832-4D	• UNION	1	C-F
	AN924-4D	• NUT, USE WITH INDEX 61	1	C-F
- 62	25-83059- 29	• TUBE ASSY, FWD FUS HEAT & VENT, 24.2 IN. LONG	1	C-F
- 63	AN837-4D	• ELBOW	1	C-F
	AN924-4D	• NUT, USE WITH INDEX 63	1	C-F
- 64	25-83059- 13	• TUBE ASSY, FWD FUS HEAT & VENT, 25.6 IN. LONG	1	
- 65	AN815-10D	• UNION	1	
- 66	25-83059- 11	• TUBE ASSY, FWD FUS HEAT & VENT, 40.0 IN. LONG	1	

FIGURE & INDEX NUMBER	PART NUMBER	1 2 3 4 5 6 7 DESCRIPTION	UNITS PER ASS'Y	USABLE ON CODE
65 - 67	AN815-10D	• UNION	1	
	AN901-10A	• GASKET, USE WITH INDEX 67	1	
- 68	AN833-16D	• ELBOW	1	
	AN924-16D	• NUT, USE WITH INDEX 68	1	
- 69	25-83059- 3	• TUBE ASSY, FWD FUS HEAT & VENT, 26.8 IN. LONG	1	
- 70	PAC2391-1	• VALVE, ELECTRICAL SHUTOFF (PC) MCDONNELL SPEC 25-83021-1	1	
- 71	AN924-16D	• NUT	1	
	AN960D2116	• WASHER, USE WITH INDEX 71		
- 72	25-83059- 5	• TUBE ASSY, FWD FUS HEAT & VENT, 19.2 IN. LONG		
- 73	AN834-16D	• TEE	1	
	AN924-16D	• NUT, USE WITH INDEX 73	1	
	AN960D2116	• WASHER, USE WITH INDEX 73	1	
- 74	25-83059- 7	• TUBE ASSY, FWD FUS HEAT & VENT, 8.0 IN. LONG	1	
- 75	25-83059- 9	• TUBE ASSY, FWD FUS HEAT & VENT, 11.8 IN. LONG	1	
- 76	AN784D16	• TEE	2	
	AN924-16D	• NUT, USE WITH INDEX 76	2	
	AN960D2116	• WASHER, USE WITH INDEX 76	2	

Forward Fuselage

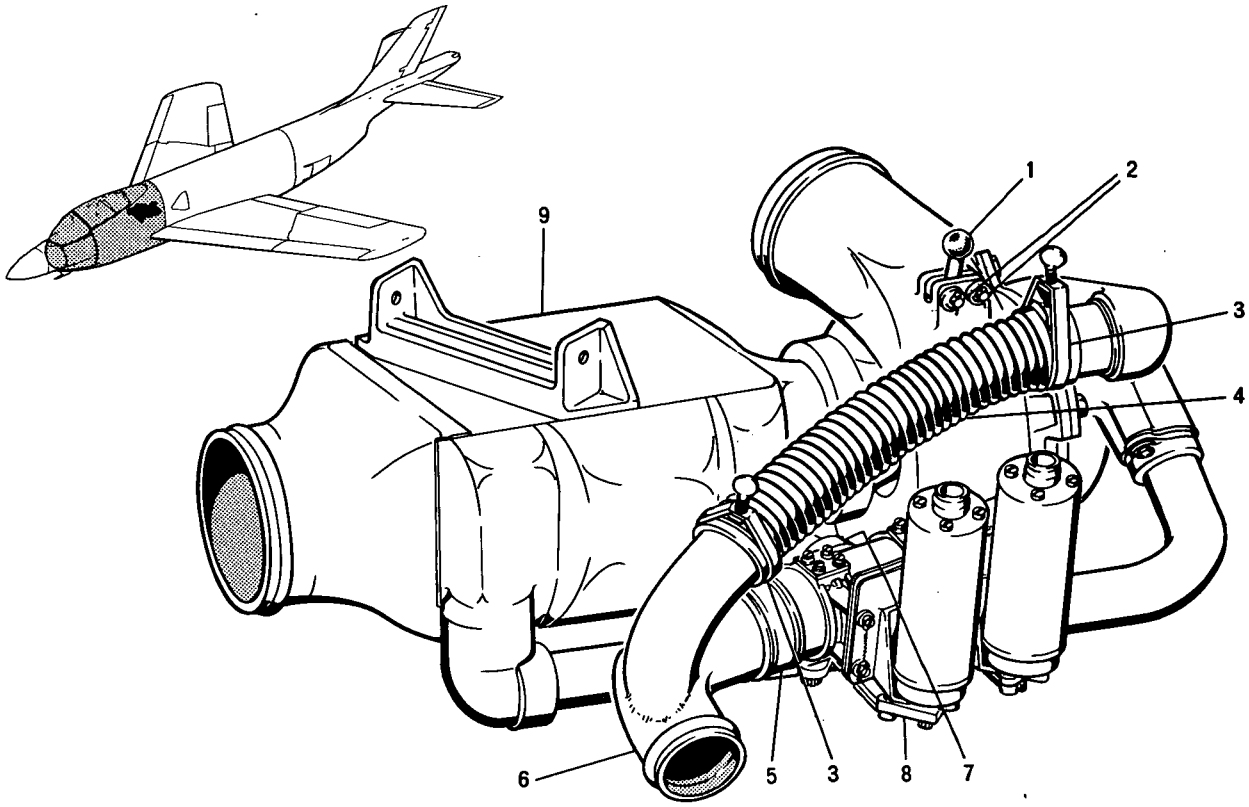

PC25-67

Figure 66 - Refrigeration And Flow Control Unit Assembly

FIGURE & INDEX NUMBER	PART NUMBER	1 2 3 4 5 6 7 DESCRIPTION	UNITS PER ASS'Y	USABLE ON CODE
66 -	25-83008- 1	UNIT ASSEMBLY, REFRIGERATION & FLOW CONTROL, SEE FIG. 65-26 FOR NEXT HIGHER ASSEMBLY	1	
- 1	25-83071- 3	• FITTING, REFRIGERATION UNIT REAR MOUNTING	1	
		ATTACHING PARTS		
- 2	AN393-25	• PIN, FLAT HEAD	2	
	AN960D10L	• WASHER	2	
	AN380-2-1	• PIN, COTTER	2	
		¤----¤-¤-¤----¤		
- 3	AN737-74	• CLAMP	2	
- 4	25-83062- 3	• DUCT, REFRIGERATION UNIT TO ADAPTER FLEXIBLE	1	
- 5	22084-2.664SH	• COUPLING ASSY (MAR)	1	
	22032-2.664	• SLEEVE (MAR) USE WITH INDEX 5	1	A-D
	42737-2.500	• SLEEVE (MAR) USE WITH INDEX 5	1	E-F
- 6	25-83056- 3	• ADAPTER, REFRIGERATION UNIT OUTLET	1	
- 7	42990-3.187M4	• COUPLING (MAR)	1	
	920AL900-40	• GASKET (JM) USE WITH INDEX 7	1	
- 8	PAC2473	• VALVE ASSEMBLY, FLOW & TEMPERATURE CONTROL (PC) MCDONNELL SPEC 25-83002-1	1	
- 9	86225	• UNIT, REFRIGERATION (HS) MCDONNELL SPEC 25-83001-1	1	

Forward Fuselage

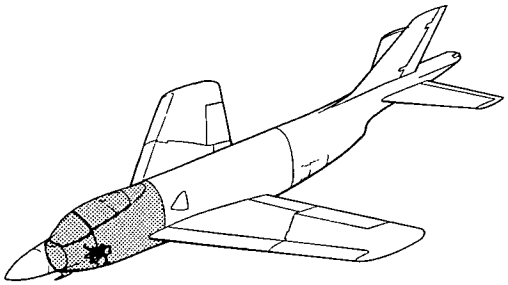

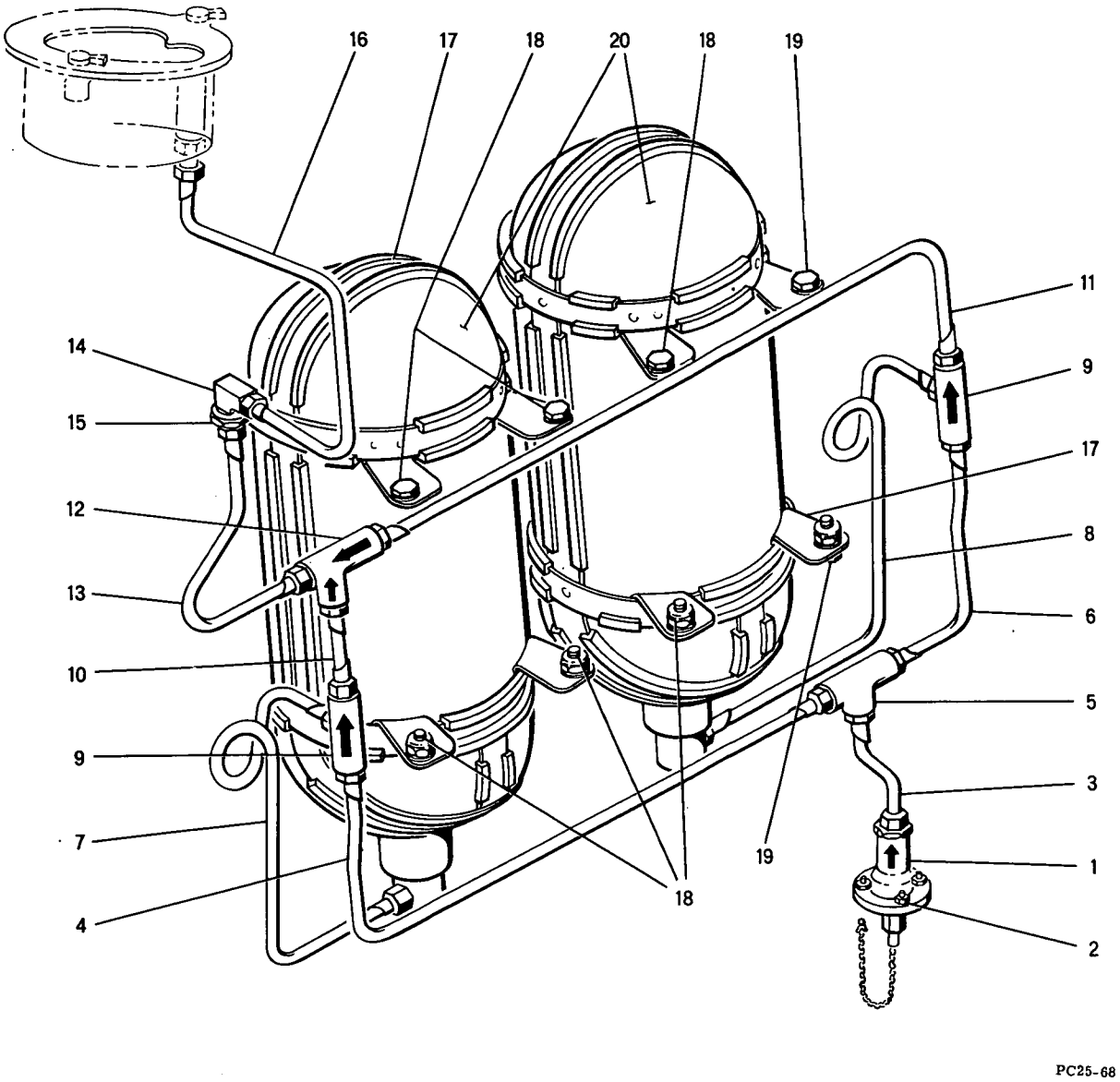

Figure 67 - Oxygen System Installation

FIGURE & INDEX NUMBER	PART NUMBER	1 2 3 4 5 6 7 DESCRIPTION	UNITS PER ASS'Y	USABLE ON CODE
67 -	25-85000- 1	SYSTEM INSTALLATION, OXYGEN, SEE FIG. 44-16 FOR NEXT HIGHER ASSY	REF	
- 1	3280	• FILLER ASSEMBLY (RYY)	1	
		ATTACHING PARTS		
- 2	NAS229-11	• SCREW	3	
	AN960D10L	• WASHER	3	
	AN960D10	• WASHER	3	
	AN364-1032	• NUT	3	
		¤----¤-¤-¤----¤		
- 3	25-85051- 3	• TUBE ASSY, OXYGEN SYS	1	
- 4	25-85051- 5	• TUBE ASSY, OXYGEN SYS	1	
- 5	AN795-3	• TEE	1	
- 6	25-85051- 7	• TUBE ASSY, OXYGEN SYS	1	
- 7	25-85051- 9	• TUBE ASSY, OXYGEN SYS	1	
- 8	25-85051- 11	• TUBE ASSY, OXYGEN SYS	1	
- 9	AN6016-2	• VALVE, CHECK	2	
- 10	25-85051- 13	• TUBE ASSY, OXYGEN SYS	1	
- 11	25-85051- 15	• TUBE ASSY, OXYGEN SYS	1	
- 12	AN6017-1	• VALVE, CHECK	1	
- 13	25-85051- 17	• TUBE ASSY, OXYGEN SYS	1	
- 14	25-85052- 3	• FITTING, CONE CONNECTION OXYGEN BULKHEAD	1	
	AN960D616	• WASHER, USE WITH INDEX 14	2	
- 15	AN924-3	• NUT	1	
- 16	25-85051- 19	• TUBE ASSY, OXYGEN SYS	1	
- 17	16274	• SUPPORT (MAR)	2	
		ATTACHING PARTS		
- 18	AN4-6A	• BOLT	6	
	AN960D416	• WASHER	18	
	AN364-428	• NUT	6	
- 19	AN4-5A	• BOLT	2	
	AN960D416L	• WASHER	2	
	AN960D416	• WASHER	4	
	AN364-428	• NUT	2	
		¤----¤-¤-¤----¤		
- 20	1084SK514	• CYLINDER, OXYGEN, GFP	2	

Forward Fuselage

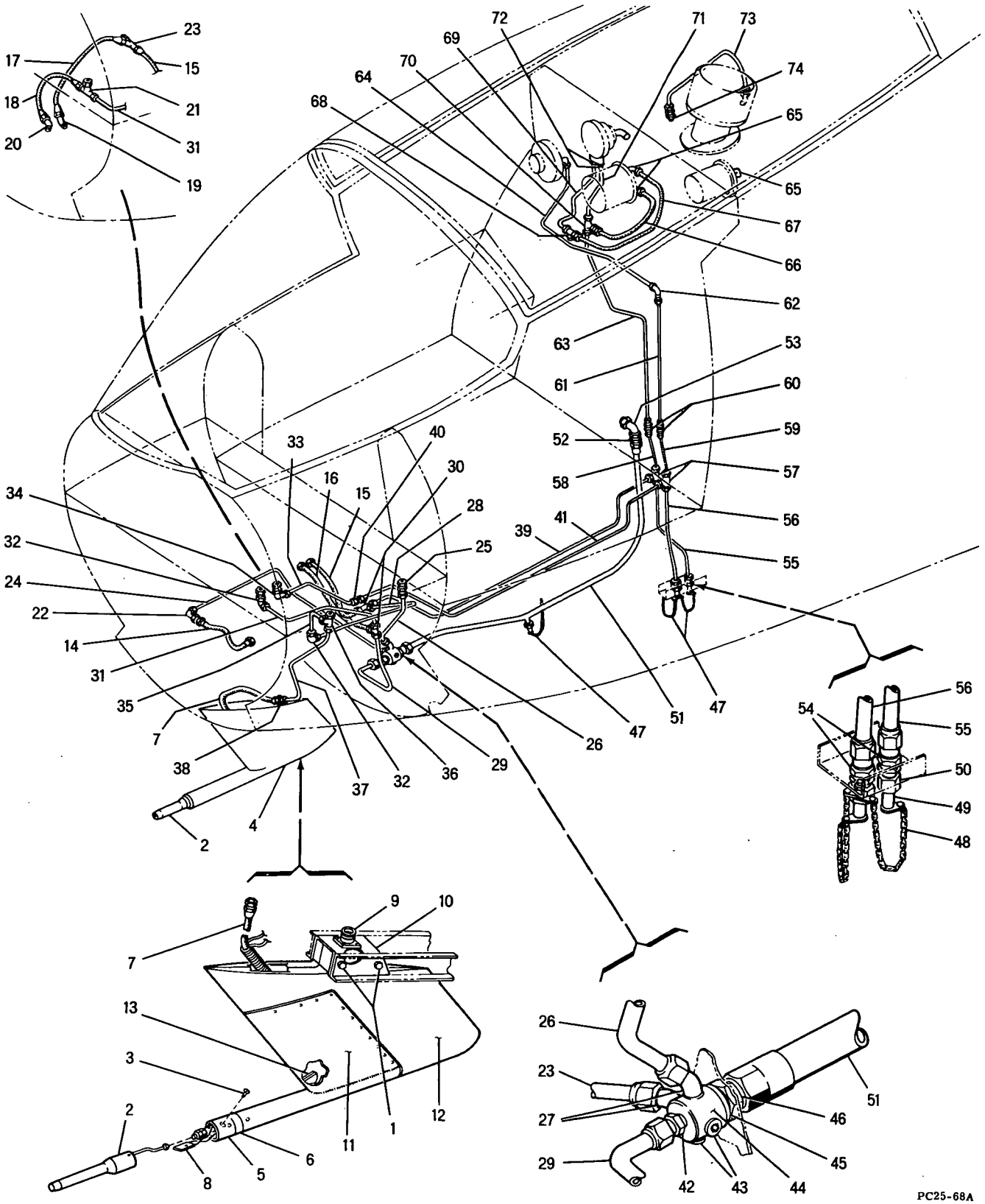

Figure 68 -- Pitot and Static System Installation

FIGURE & INDEX NUMBER	PART NUMBER	1 2 3 4 5 6 7 DESCRIPTION	UNITS PER ASS'Y	USABLE ON CODE
68 -	25-60008- 1	SYSTEM INSTL, PITOT & STATIC, SEE FIG. 44-17 FOR NEXT HIGHER ASSY	REF	A-B
	25-60008-301	SYSTEM INSTL, PITOT & STATIC, SEE FIG. 44-17 FOR NEXT HIGHER ASSY	REF	C-F
	25-60057- 1	• MAST ASSEMBLY, PITOT & LOWER UHF ANTENNA	1	
		ATTACHING PARTS		
- 1	AN4-32A	• BOLT	2	
	AN960D416L	• WASHER	2	
	AN960D416	• WASHER	4	
	AN364-428	• NUT	2	
		¤----¤-¤-¤----¤		
- 2	R88T2875-000	• • TUBE, PITOT, AN5813-1 (AFTO)05-50-1, GFP, LESS SLEEVE ASSEMBLY	1	
		ATTACHING PARTS		
- 3	AN520-6-4	• • SCREW, FURNISHED WITH R88T2875-000	REF	
	AN935-6	• • WASHER, LOCK, FURNISHED WITH R88T2875-000	REF	
		¤----¤-¤-¤----¤		
- 4	25-60057- 3	• • MAST ASSEMBLY	1	
- 5	25-60108- 3	• • • TUBE, PITOT HEAD SUPPORT	1	
- 6	25-60109- 3	• • • INSULATOR, PITOT HEAD & LOWER UHF ANTENNA	1	
	25-60090- 1	• • • HOSE ASSEMBLY, PITOT TUBE	1	
- 7	AN6270-4-36	• • • • HOSE ASSY	1	
	25-79000- 99	• • • • BUNDLE ASSEMBLY, WIRE	1	
- 8	AN3115-1	• • • • • RECEPTACLE, PITOT HEATER	1	
- 9	UG58A/U	• • • RECEPTACLE	1	
		ATTACHING PARTS		
	AN515-4R6	• • • SCREW	4	
	AN960D4L	• • • WASHER	4	
	AN365-440	• • • NUT	4	
		¤----¤-¤-¤----¤		
- 10	25-60067- 5	• • • BRACKET, ANTENNA CONNECTOR SUPPORT	1	
- 11	25-60065- 1	• • • ANTENNA ASSEMBLY, LOWER UHF	1	
- 12	25-60058-301	• • • SUPPORT ASSEMBLY, PITOT & LOWER UHF ANTENNA MAST	1	
	25-60064- 3	• • • • INSERT, ANTENNA CONNECTION	1	
- 13	25-60058-303	• • • GUIDE ASSY, PITOT & LOWER UHF ANTENNA MAST	1	
- 14	AN6270-4-23.5	• HOSE ASSEMBLY, STATIC UTILITY	1	
- 15	AN6270-4-12.75	• HOSE ASSEMBLY, PITOT	1	
- 16	AN6270-4-10.5	• HOSE ASSEMBLY, STATIC UTILITY	1	
- 17	AN6270-4-13.5	• HOSE ASSEMBLY, PITOT	1	C-F
- 18	AN6270-4-10	• HOSE ASSEMBLY, STATIC UTILITY	1	C-F
- 19	AN822-4D	• ELBOW	1	C-F
- 20	AN823-4D	• ELBOW	1	C-F
- 21	AN804D4	• TEE	1	C-F
	AN960D716	• WASHER, USE WITH INDEX 21	1	C-F
	AN924-4D	• NUT, USE WITH INDEX 21	1	C-F
- 22	AN833-4D	• ELBOW	1	A-B
	AN960D716	• WASHER, USE WITH INDEX 22	1	A-B
	AN924-4D	• NUT, USE WITH INDEX 22	1	
- 23	AN784D4	• TEE	1	C-F
	AN924-4D	• NUT, USE WITH INDEX 23	1	
	AN6290-4	• GASKET, USE WITH INDEX 23	1	C-F
- 24	25-60061- 79	• TUBE ASSEMBLY, STATIC UTILITY	1	
- 25	AN832-4D	• UNION	1	
	AN924-4D	• NUT, USE WITH INDEX 25	1	
- 26	25-60061- 53	• TUBE ASSEMBLY, STATIC INSTRUMENT	1	
- 27	AN823-4D	• ELBOW	2	
- 28	25-60061- 65	• TUBE ASSEMBLY, PITOT	1	
- 29	25-60061- 37	• TUBE ASSEMBLY, STATIC UTILITY	1	
- 30	AN804D4	• TEE	2	
	AN960D716	• WASHER, USE WITH INDEX 30	2	
	AN924-4D	• NUT, USE WITH INDEX 30	2	
- 31	25-60061- 63	• TUBE ASSEMBLY, STATIC UTILITY	1	
- 32	AN833-4D	• ELBOW	2	
	AN960D716	• WASHER, USE WITH INDEX 32	2	
	AN924-4D	• NUT, USE WITH INDEX 32	2	
- 33	25-60061- 39	• TUBE ASSEMBLY, STATIC UTILITY	1	
- 34	AN833-4D	• ELBOW	1	
	25-69167- 7	• SPACER, TUBE MOUNTING, USE WITH INDEX 34	1	
	AN924-4D	• NUT, USE WITH INDEX 34	1	
- 35	25-60061- 61	• TUBE ASSEMBLY, PITOT	1	
- 36	AN804D4	• TEE	1	
	AN960D716	• WASHER, USE WITH INDEX 36	1	
	AN924-4D	• NUT, USE WITH INDEX 36	1	

FIGURE & INDEX NUMBER	PART NUMBER	1 2 3 4 5 6 7 DESCRIPTION	UNITS PER ASS'Y	USABLE ON CODE
68 - 37	25-60061- 59	• TUBE ASSEMBLY, PITOT	1	
- 38	AN832-4D	• UNION	1	
	AN924-4D	• NUT, USE WITH INDEX 38	1	
- 39	25-60061- 67	• TUBE ASSEMBLY, PITOT	1	
- 40	AN832-4D	• UNION	1	
	AN924-4D	• NUT, USE WITH INDEX 40	1	
- 41	25-60061- 41	• TUBE ASSEMBLY, STATIC UTILITY	1	
- 42	AN816-4D	• NIPPLE	1	
- 43	AN932D2	• PLUG	2	
- 44	25-60106- 3	• FITTING, BULKHEAD STATIC AIR	1	
- 45	AN960D1716	• WASHER	1	
- 46	AN924-12D	• NUT	1	
- 47	25-83099- 1	• PLUG ASSEMBLY, CANOPY SEAL TEST FITTING	3	
		ATTACHING PARTS		
	AN515-6R7	• SCREW	3	
	AN960D6L	• WASHER	3	
	AN365-632	• NUT	3	
		¤-----¤-¤-¤-----¤		
- 48	15-83140	• • CHAIN ASSY, AIR INLET GROUND PRESSURE TEST	1	
- 49	25-83098- 3	• • PLUG, CANOPY SEAL TEST FITTING	1	
- 50	AN818-4D	• • NUT	1	
- 51	25-60105- 1	• MANIFOLD ASSEMBLY, STATIC PRESSURE	1	
- 52	AN818-12D	• NUT	1	
	AN819-12Z	• SLEEVE, USE WITH INDEX 52	1	
- 53	AN833-12D	• ELBOW	1	
	AN960D1716	• WASHER, USE WITH INDEX 53	1	
	AN924-12D	• NUT, USE WITH INDEX 53	1	
- 54	AN832-4D	• UNION	2	
	AN924-4D	• NUT, USE WITH INDEX 54	2	
- 55	25-60061- 69	• TUBE ASSEMBLY, PITOT	1	
- 56	25-60061- 43	• TUBE ASSEMBLY, STATIC UTILITY	1	
- 57	AN824-4D	• TEE	2	
- 58	25-60061- 71	• TUBE ASSEMBLY, PITOT	1	
- 59	25-60061- 45	• TUBE ASSEMBLY, STATIC UTILITY	1	
- 60	AN832-4D	• UNION	2	
	AN924-4D	• NUT, USE WITH INDEX 60	2	
- 61	25-60061- 47	• TUBE ASSEMBLY, STATIC UTILITY	1	
- 62	AN833-4D	• ELBOW	1	
	AN960D716	• WASHER, USE WITH INDEX 62	1	
	AN924-4D	• NUT, USE WITH INDEX 62	1	
- 63	25-60061- 73	• TUBE ASSEMBLY, PITOT	1	
- 64	25-60061- 49	• TUBE ASSEMBLY, STATIC UTILITY	1	
- 65	AN822-4D	• ELBOW	3	
- 66	AN6270-4-14.25	• HOSE ASSEMBLY, STATIC UTILITY	1	
- 67	AN6270-4-14	• HOSE ASSEMBLY, PITOT	1	
- 68	AN834-4D	• TEE	1	
	AN960D716	• WASHER, USE WITH INDEX 68	1	
	AN924-4D	• NUT, USE WITH INDEX 68	1	
- 69	25-60061- 81	• TUBE ASSEMBLY, STATIC UTILITY	1	
- 70	AN804D4	• TEE	1	
	AN960D716	• WASHER, USE WITH INDEX 70	1	
	AN924-4D	• NUT, USE WITH INDEX 70	1	
- 71	25-60061- 75	• TUBE ASSEMBLY, PITOT	1	
- 72	AN815-4D	• NIPPLE	2	
	AN6290-4	• GASKET, USE WITH INDEX 72	1	
- 73	25-60061- 21	• TUBE ASSEMBLY, STATIC UTILITY	1	
- 74	AN832-4D	• UNION	1	
	AN960D716	• WASHER, USE WITH INDEX 74	1	
	AN924-4D	• NUT, USE WITH INDEX 74	1	

FIGURE & INDEX NUMBER	PART NUMBER	1 2 3 4 5 6 7 DESCRIPTION	UNITS PER ASS'Y	USABLE ON CODE
69 -	25-69186- 1	HYDRAULIC & EMERGENCY AIR INSTALLATION, FORWARD FUSELAGE, CANTED FUSELAGE STATION 88.00 TO FUSELAGE STATION 160.00, SEE FIG. 44-14 FOR NEXT HIGHER ASSY	REF	
- 1	25-72035- 13	• TUBE ASSY, EMERGENCY AIR PRESSURE	1	
- 2	MC1603	• VALVE, AIR PRESSURE RELIEF (MCV) MCDONNELL SPEC. 25-72002-1	2	
	AN6290-4	• GASKET, USE WITH INDEX 2	2	
- 3	299A4BB	• VALVE, CHECK (JAPC)	2	
	MS21902D4	• UNION, USE WITH INDEX 3	2	
	AN6290-4	• GASKET, USE WITH INDEX 3	4	
- 4	MS21910D4	• TEE	1	
	AN6290-4	• GASKET, USE WITH INDEX 4	1	
	AN6291-4	• RING, BACK UP, USE WITH INDEX 4	1	
	AN6289D4	• NUT, USE WITH INDEX 4	1	
- 5	MS21907D4	• ELBOW	1	
	AN6290-4	• GASKET, USE WITH INDEX 5	1	
	AN6291-4	• RING, BACK UP, USE WITH INDEX 5	1	
	AN6289D4	• NUT, USE WITH INDEX 5	1	
- 6	870533	• BOTTLE, AIR (WK)	1	
- 7	15524-10	• STRAP ASSY (MAR)	2	
		ATTACHING PARTS		
	AN393-41	• PIN, FLAT HEAD	2	
	AN960D10L	• WASHER	2	
	AN960D10	• WASHER	2	
	AN380-2-2	• PIN, COTTER	2	
		¤----¤-¤-¤----¤		
- 8	15524-12	• STRAP ASSY (MAR)	2	
		ATTACHING PARTS		
	AN393-41	• PIN, FLAT HEAD	2	
	AN960D10L	• WASHER	2	
	AN960D10	• WASHER	2	
	AN380-2-2	• PIN, COTTER	2	
		¤----¤-¤-¤----¤		
- 9	25-72035- 15	• TUBE ASSY, EMERGENCY AIR PRESSURE	1	
- 10	MS21902D4	• UNION	1	
- 11	25-72035- 17	• TUBE ASSY, EMERGENCY AIR PRESSURE	1	
- 12	MS21908D4	• ELBOW	3	
	AN924-4D	• NUT, USE WITH INDEX 12	3	
	25-69167- 13	• SPACER, USE WITH INDEX 12	3	
- 13	25-72035- 19	• TUBE ASSY, EMERGENCY AIR PRESSURE	1	
- 14	MS21908D4	• ELBOW	2	
	AN924-4D	• NUT, USE WITH INDEX 14	2	
	AN970D716	• WASHER, USE WITH INDEX 14	2	
- 15	25-72035- 21	• TUBE ASSY, EMERGENCY AIR PRESSURE	1	
- 16	299A4BB	• VALVE, CHECK (JAPC)	1	
	MS21902D4	• UNION, USE WITH INDEX 16	2	
	AN6290-4	• GASKET, USE WITH INDEX 16	2	
- 17	25-72035- 71	• TUBE ASSY, EMERGENCY AIR PRESSURE	1	
- 18	MS21908D4	• ELBOW	4	
	AN6290-4	• GASKET, USE WITH INDEX 18	4	
	AN6291-4	• RING, BACK UP, USE WITH INDEX 18	4	
	AN6289D4	• NUT, USE WITH INDEX 18	4	
- 19	MS21902D4	• UNION	2	
	AN6290-4	• GASKET, USE WITH INDEX 19	2	
- 20	25-72035- 41	• TUBE ASSY, EMERGENCY AIR VENT	1	
- 21	MS21903D4	• UNION	1	
	AN924-4D	• NUT, USE WITH INDEX 21	1	
- 22	25-72035- 43	• TUBE ASSY, EMERGENCY AIR VENT	1	
- 23	25-72035- 45	• TUBE ASSY, EMERGENCY AIR VENT	1	
- 24	AN818-4D	• NUT	1	
- 25	25-72029- 3	• SCREEN, VENT ASSY	1	
- 26	AN960D8	• WASHER	2	
- 27	MS21908D4	• ELBOW	1	
	AN924-4D	• NUT, USE WITH INDEX 27	1	
	AN960D716	• WASHER, USE WITH INDEX 27	1	
- 28	25-72035- 23	• TUBE ASSY, EMERGENCY LANDING GEAR DOWN	1	
- 29	25-72035- 25	• TUBE ASSY, EMERGENCY LANDING GEAR DOWN	1	
- 30	25-72035- 27	• TUBE ASSY, EMERGENCY LANDING GEAR DOWN	1	
- 31	25-69204- 37	• TUBE ASSY, UTILITY PRESSURE	1	
- 32	AN6280-4	• VALVE, CHECK	1	
	MS21902D4	• UNION, USE WITH INDEX 32	1	
	AN6290-4	• GASKET, USE WITH INDEX 32	2	
	AN6291-4	• RING, BACK UP, USE WITH INDEX 32	1	
	AN6289D4	• NUT, USE WITH INDEX 32	1	
- 33	AN938D4	• TEE	1	
	MS21902D4	• UNION, USE WITH INDEX 33	2	

Forward Fuselage

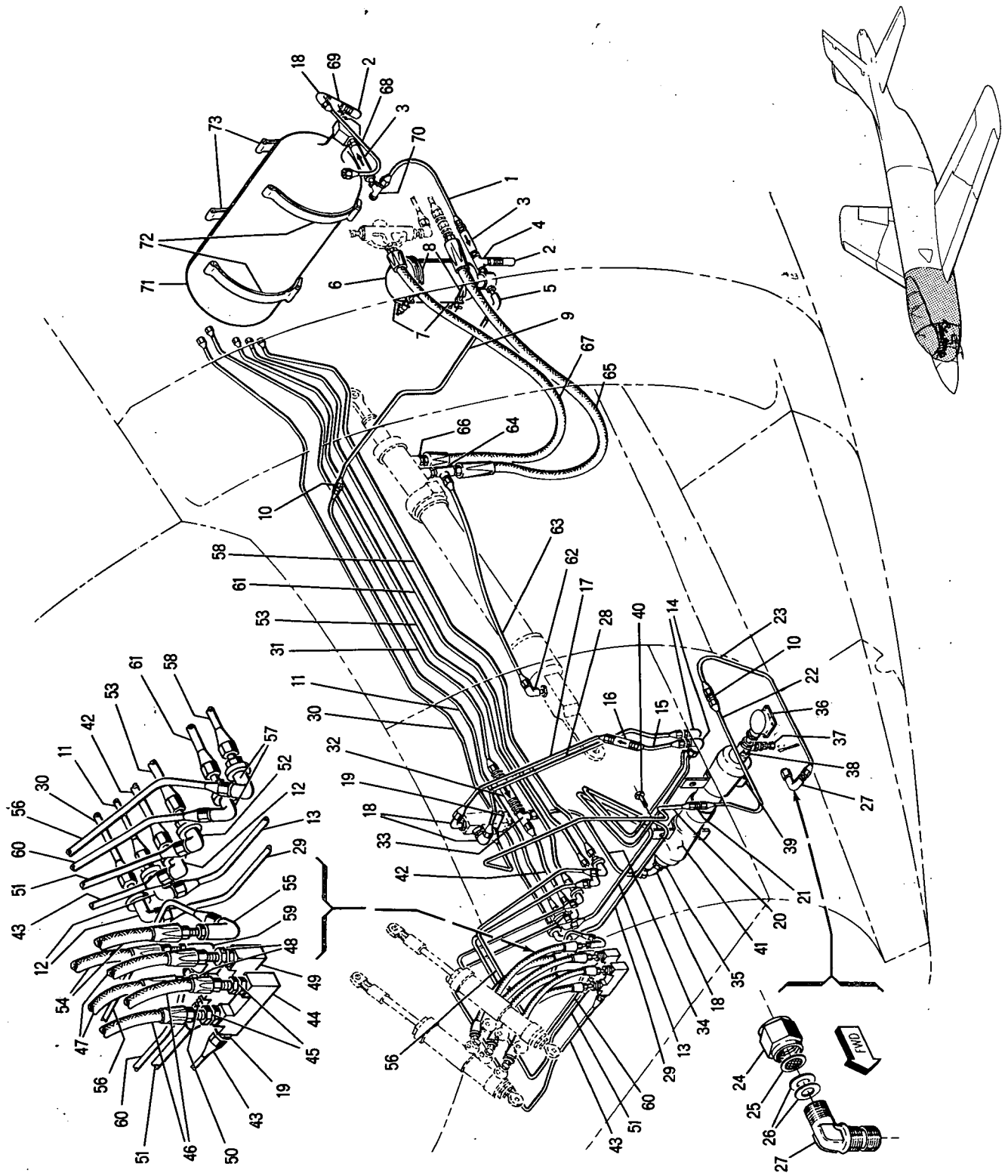

Figure 69 -- Forward Fuselage Hydraulic and Emergency Air Installation
(Canted Fuselage Station 88 to Fuselage Station 160)

FIGURE & INDEX NUMBER	PART NUMBER	1 2 3 4 5 6 7 DESCRIPTION	UNITS PER ASS'Y	USABLE ON CODE
69 -	AN6290-4	• GASKET, USE WITH INDEX 33	3	
	MS21903D4	• UNION, USE WITH INDEX 33	1	
	AN924-4D	• NUT, USE WITH INDEX 33	1	
- 34	25-69204- 39	• TUBE ASSY, ACCUMULATOR PRESSURE	1	
- 35	AN893-3D	• BUSHING	1	
	AN6290-8	• GASKET, USE WITH INDEX 35	1	
- 36	AN5769-2A	• GAGE	1	
	AN6290-4	• GASKET, USE WITH INDEX 36	1	
	AN6291-4	• RING, BACK UP, USE WITH INDEX 36	1	
	AN6289D4	• NUT, USE WITH INDEX 36	1	
- 37	AN6287-1	• VALVE, PRESSURE	1	
- 38	AN6285D1	• BODY, ADAPTER	1	
	AN6285D2	• BOLT, ADAPTER, USE WITH 38	1	
	AF47A1562	• PACKING, O RING, USE WITH INDEX 38	2	
- 39	25-69145- 3	• CLAMP, ACCUMULATOR MOUNTING	2	
		ATTACHING PARTS		
- 40	AN3-5A	• BOLT	4	
	AN960D10L	• WASHER	4	
		¤-----¤-¤-¤-----¤		
- 41	1356-512457	• ACCUMULATOR (PA)	1	
- 42	25-69204- 41	• TUBE ASSY, BRAKE PRESSURE	1	
- 43	25-69204- 43	• TUBE ASSY, BRAKE PRESSURE	1	
- 44	25-69146- 3	• MANIFOLD, BRAKE PRESSURE	1	
- 45	MS21903D4	• UNION	2	
	AN924-4D	• NUT, USE WITH INDEX 45	2	
	AN6290-4	• GASKET, USE WITH INDEX 45	2	
- 46	25-69195- 63	• HOSE ASSY, BRAKE PRESSURE	2	
	ER6292-4-13.5	• • HOSE ASSY (WK)	1	
- 47	25-69195- 61	• HOSE ASSY, UTILITY RETURN	1	
	ER6292-5-13.75	• • HOSE ASSY (WK)	1	
- 48	MS21903D5	• UNION	2	
	AN924-5D	• NUT, USE WITH INDEX 48	2	
	AN6290-5	• GASKET, USE WITH INDEX 48	2	
- 49	25-69147- 3	• MANIFOLD, UTILITY RETURN	1	
- 50	MS21902D6	• UNION	1	
	AN6290-6	• GASKET, USE WITH INDEX 50	1	
- 51	25-69204- 57	• TUBE ASSY, UTILITY RETURN	1	
- 52	MS21908D6	• ELBOW	1	
	AN924-6D	• NUT, USE WITH INDEX 52	1	
	25-69167- 5	• SPACER, TUBE MOUNTING, USE WITH INDEX 52	1	
- 53	25-69204- 55	• TUBE ASSY, UTILITY RETURN	1	
- 54	25-69195- 59	• HOSE ASSY, BRAKE OPERATE	2	
	ER6292-5-14.5	• • HOSE ASSY (WK)	1	
- 55	MS21908D5	• ELBOW	1	
	AN924-5D	• NUT, USE WITH INDEX 55	1	
	AN960D816	• WASHER, USE WITH INDEX 55	1	
- 56	25-69204- 25	• TUBE ASSY, LEFT BRAKE OPERATE	1	
- 57	MS21908D5	• ELBOW	2	
	AN924-5D	• NUT, USE WITH INDEX 57	2	
	25-69167- 11	• SPACER, TUBE MOUNTING, USE WITH INDEX 57	2	
- 58	25-69204- 23	• TUBE ASSY, LEFT BRAKE OPERATE	1	
- 59	MS21908D5	• ELBOW	1	
	AN924-5D	• NUT, USE WITH INDEX 59	1	
	25-69167- 3	• SPACER, TUBE MOUNTING, USE WITH INDEX 59	1	
- 60	25-69204- 13	• TUBE ASSY, RIGHT BRAKE OPERATE	1	
- 61	25-69204- 11	• TUBE ASSY, RIGHT BRAKE OPERATE	1	
- 62	MS21908D6	• ELBOW	1	
	AN6290-6	• GASKET, USE WITH INDEX 62	1	
	AN6291-6	• RING, BACK UP, USE WITH INDEX 62	1	
	AN6289D6	• NUT, USE WITH INDEX 62	1	
- 63	25-69204- 97	• TUBE ASSY, NOSE GEAR UP	1	
- 64	MS21912D6	• TEE	1	
	AN6290-6	• GASKET, USE WITH INDEX 64	1	
	AN6291-6	• RING, BACK UP, USE WITH INDEX 64	1	
	AN6289D6	• NUT, USE WITH INDEX 64	1	
- 65	25-69195- 65	• HOSE ASSY, NOSE GEAR UP	1	
	ER6292-6-35.5	• • HOSE ASSY (WK)	1	
- 66	MS21916D5-4	• REDUCER	1	
	AN6290-5	• GASKET, USE WITH INDEX 66	1	
- 67	25-69195-159	• HOSE ASSY, NOSE GEAR DOWN	1	
	ER6292-4-35	• • HOSE ASSY (WK)	1	
- 68	25-72035- 47	• TUBE ASSY, EMERGENCY AIR PRESSURE	1	
- 69	AN938D4	• TEE	1	
	MS21903D4	• UNION, USE WITH INDEX 69	1	
	AN6290-4	• GASKET, USE WITH INDEX 69	1	
	AN6291-4	• RING, BACK UP, USE WITH INDEX 69	1	
	AN6289D4	• NUT, USE WITH INDEX 69	1	

FIGURE & INDEX NUMBER	PART NUMBER	1 2 3 4 5 6 7 DESCRIPTION	UNITS PER ASS'Y	USABLE ON CODE
69 - 70	MS21909D4	• TEE	1	
	AN6290-4	• GASKET, USE WITH INDEX 70	1	
	AN6291-4	• RING, BACK UP, USE WITH INDEX 70	1	
	AN6289D4	• NUT, USE WITH INDEX 70	1	
- 71	870833	• BOTTLE, AIR (WK)	1	
- 72	16893-10	• STRAP ASSY (MAR)	2	
		ATTACHING PARTS		
	AN394-29	• PIN, FLAT HEAD	2	
	AN960D416L	• WASHER	4	
	AN380-2-2	• PIN, COTTER	2	
		¤----¤-¤-¤----¤		
- 73	16893-12	• STRAP ASSY (MAR)	2	
		ATTACHING PARTS		
	AN394-29	• PIN, FLAT HEAD	2	
	AN960D416L	• WASHER	4	
	AN380-2-2	• PIN, COTTER	2	
		¤----¤-¤-¤----¤		

FIGURE & INDEX NUMBER	PART NUMBER	1 2 3 4 5 6 7 DESCRIPTION	UNITS PER ASS'Y	USABLE ON CODE
70 -	25-69186- 1	HYDRAULIC & EMERGENCY AIR INSTALLATION, FORWARD FUSELAGE, FUSELAGE STATION 160.00 TO FUSELAGE STATION 232.00, SEE FIG. 44-14 FOR NEXT HIGHER ASSY	REF	
- 1	MS21903D4	. UNION	2	
	AN924-4D	. NUT, USE WITH INDEX 1	2	
- 2	25-72035- 29	. TUBE ASSY, EMERGENCY LANDING GEAR DOWN	1	
- 3	MS21905D4	. TEE	1	
- 4	25-72035- 31	. TUBE ASSY, EMERGENCY LANDING GEAR DOWN	1	
- 5	MS21902D4	. UNION	2	
	AN6290-4	. GASKET, USE WITH INDEX 5	2	
- 6	AN6277-4	. VALVE, HYD SHUTTLE	1	
		ATTACHING PARTS		
	AN3-23A	. BOLT	2	
	AN960D10	. WASHER	2	
	25-69144- 3	. SPACER, VALVE MTG	1	
		¤----¤-¤-¤----¤		
- 7	25-72035- 33	. TUBE ASSY, EMERGENCY LANDING GEAR DOWN	1	
- 8	AN939D4	. ELBOW	10	
	MS21902D4	. UNION, USE WITH INDEX 8	10	
	AN6290-4	. GASKET, USE WITH INDEX 8	20	
	AN6291-4	. RING, BACK UP, USE WITH INDEX 8	5	
	AN6289D4	. NUT, USE WITH INDEX 8	5	
	MS21903D4	. UNION, USE WITH INDEX 8	5	
	AN924-4D	. NUT, USE WITH INDEX 8	5	
- 9	25-72035- 79	. TUBE ASSY, EMERGENCY LANDING GEAR DOWN	1	
- 10	MS21908D4	. ELBOW	5	
	AN924-4D	. NUT, USE WITH INDEX 10	5	
	AN960D716	. WASHER, USE WITH INDEX 10	5	
- 11	25-72035- 11	. TUBE ASSY, EMERGENCY AIR PRESSURE	1	
- 12	MS21902D4	. UNION	2	
- 13	25-72035- 9	. TUBE ASSY, EMERGENCY AIR PRESSURE	1	
- 14	25-72035- 77	. TUBE ASSY, EMERGENCY AIR PRESSURE	1	
- 15	25-69204- 35	. TUBE ASSY, UTILITY PRESSURE	1	
- 16	25-69204-111	. TUBE ASSY, UTILITY PRESSURE	1	
- 17	MS21907D4	. ELBOW	3	
	AN924-4D	. NUT, USE WITH INDEX 17	3	
	AN960D716	. WASHER, USE WITH INDEX 17	3	
- 18	MS21903D6	. UNION	1	
	AN924-6D	. NUT, USE WITH INDEX 18	1	
- 19	25-69204- 53	. TUBE ASSY, UTILITY RETURN	1	
- 20	AN939D6	. ELBOW	2	
	MS21902D6	. UNION, USE WITH INDEX 20	2	
	AN6290-6	. GASKET, USE WITH INDEX 20	4	
	AN6291-6	. RING, BACK UP, USE WITH INDEX 20	1	
	AN6289D6	. NUT, USE WITH INDEX 20	1	
	MS21903D6	. UNION, USE WITH INDEX 20	1	
	AN924-6D	. NUT, USE WITH INDEX 20	1	
- 21	25-69204- 51	. TUBE ASSY, UTILITY RETURN	1	
- 22	MS21908D6	. ELBOW	1	
	AN924-6D	. NUT, USE WITH INDEX 22	1	
	AN960D716	. WASHER, USE WITH INDEX 22	1	
- 23	MS21903D5	. UNION	2	
	AN924-5D	. NUT, USE WITH INDEX 23	2	
- 24	25-69204- 9	. TUBE ASSY, RIGHT BRAKE OPERATE	1	
- 25	AN939D5	. ELBOW	4	
	MS21902D5	. UNION, USE WITH INDEX 25	4	
	AN6290-5	. GASKET, USE WITH INDEX 25	8	
	AN6291-5	. RING, BACK UP, USE WITH INDEX 25	2	
	AN6289D5	. NUT, USE WITH INDEX 25	2	
	MS21903D5	. UNION, USE WITH INDEX 25	2	
	AN924-5D	. NUT, USE WITH INDEX 25	2	
- 26	25-69204- 7	. TUBE ASSY, RIGHT BRAKE OPERATE	1	
- 27	MS21908D5	. ELBOW	1	
	AN924-5D	. NUT, USE WITH INDEX 27	1	
	AN960D816	. WASHER, USE WITH INDEX 27	1	
- 28	25-69204- 21	. TUBE ASSY, LEFT BRAKE OPERATE	1	
- 29	25-69204- 19	. TUBE ASSY, LEFT BRAKE OPERATE	1	
- 30	MS21907D5	. ELBOW	1	
	AN924-5D	. NUT, USE WITH INDEX 30	1	
	AN960D816	. WASHER, USE WITH INDEX 30	1	
- 31	MS21908D4	. ELBOW	5	
	AN6290-4	. GASKET, USE WITH INDEX 31	5	
	AN6291-4	. RING, BACK UP, USE WITH INDEX 31	5	
	AN6289D4	. NUT, USE WITH INDEX 31	5	
- 32	25-69204-105	. TUBE ASSY, NOSE LANDING GEAR DOWN	1	
- 33	25-69204-103	. TUBE ASSY, NOSE LANDING GEAR DOWN	1	
- 34	MS21908D4	. ELBOW	1	
	25-69167- 7	. SPACER, USE WITH INDEX 34	1	
	AN924-4D	. NUT, USE WITH INDEX 34	1	

Forward Fuselage

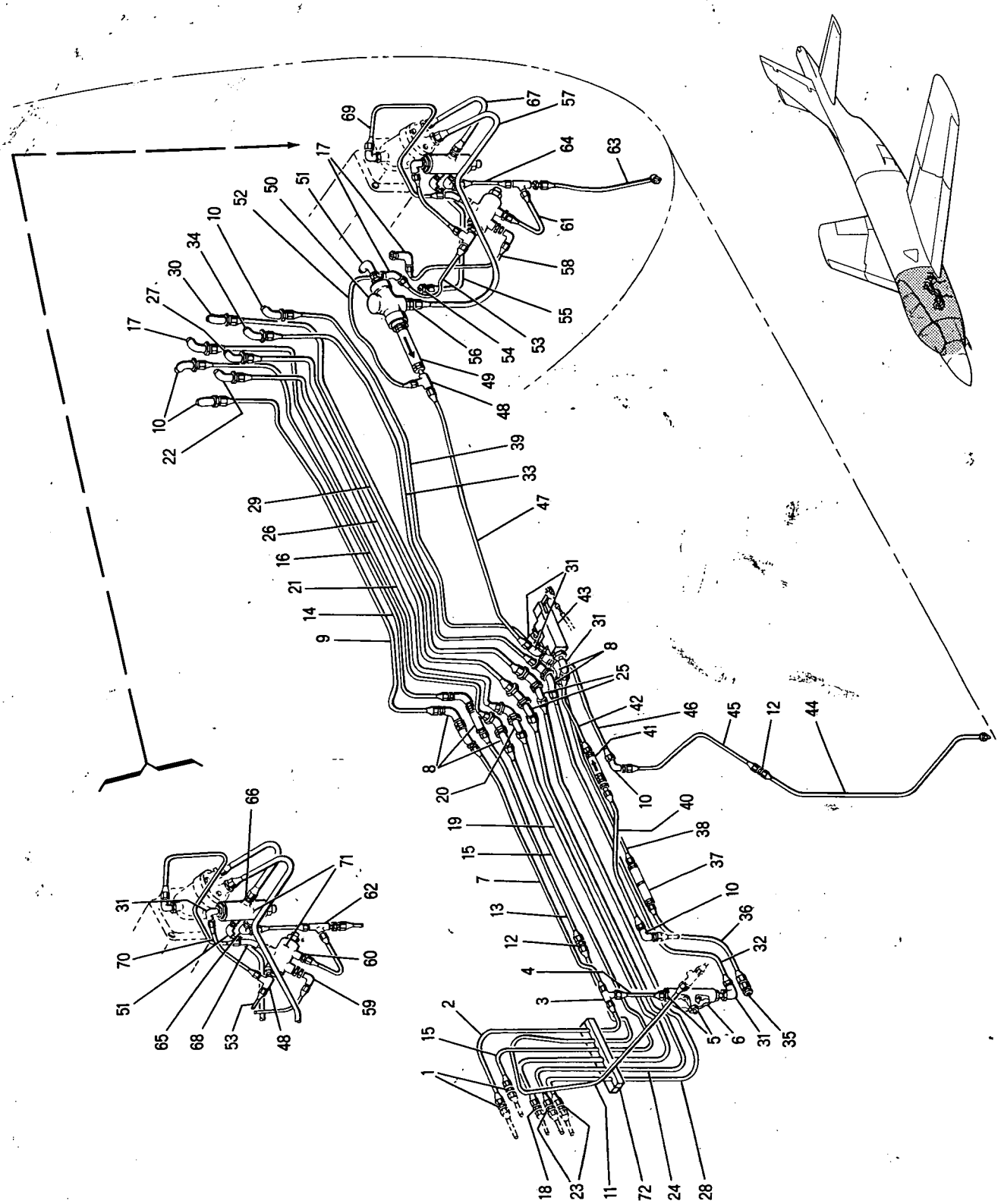

PC25-70

Figure 70 -- Forward Fuselage Hydraulic and Emergency Air Installation (Fuselage Station 160 to Fuselage Station 232).

FIGURE & INDEX NUMBER	PART NUMBER	1 2 3 4 5 6 7 DESCRIPTION	UNITS PER ASS'Y	USABLE ON CODE
70 - 35	MS21903D6	• UNION	1	
	AN924-6D	• NUT, USE WITH INDEX 35	1	
	MS21915D6-4	• BUSHING, USE WITH INDEX 35	1	
	AN6290-6	• GASKET, USE WITH INDEX 35	1	
- 36	25-69204- 95	• TUBE ASSY, NOSE LANDING GEAR UP	1	
- 37	17-100-67-10	• RESTRICTOR (GPPI)	1	
	MS21902D4	• UNION, USE WITH INDEX 37	2	
	AN6290-4	• GASKET, USE WITH INDEX 37	2	
- 38	25-69204- 93	• TUBE ASSY, NOSE LANDING GEAR UP	1	
- 39	25-69204- 91	• TUBE ASSY, NOSE LANDING GEAR UP	1	
- 40	25-72035- 49	• TUBE ASSY, EMERGENCY AIR PRESSURE	1	
- 41	299A48B	• VALVE, CHECK (JAPC)	1	
	AN6290-4	• GASKET, USE WITH INDEX 41	2	
	MS21902D4	• UNION, USE WITH INDEX 41	1	
	MS21903D4	• UNION, USE WITH INDEX 41	1	
	AN924-4D	• NUT, USE WITH INDEX 41	1	
- 42	25-72035- 75	• TUBE ASSY, EMERGENCY AIR PRESSURE	1	
- 43	870447	• VALVE, SELECTOR (WK)	1	
		ATTACHING PARTS		
	AN3-14A	• BOLT	3	
	AN960D10	• WASHER	3	
		¤----¤-¤-¤----¤		
- 44	25-72035- 73	• TUBE ASSY, EMERGENCY AIR VENT	1	
- 45	25-72035- 69	• TUBE ASSY, EMERGENCY AIR VENT	1	
- 46	25-72035- 67	• TUBE ASSY, EMERGENCY AIR VENT	1	
- 47	25-72035- 53	• TUBE ASSY, EMERGENCY SLAT EXTEND	1	
- 48	MS21912D4	• TEE	2	
	AN6290-4	• GASKET, USE WITH INDEX 48	2	
	AN6291-4	• RING, BACK UP, USE WITH INDEX 48	2	
	AN6289D4	• NUT, USE WITH INDEX 48	2	
- 49	82-100-070	• RESTRICTOR, ONE WAY (GPPI)	1	
	MS21916D8-4	• REDUCER, USE WITH INDEX 49	1	
	AN6290-8	• GASKET, USE WITH INDEX 49	1	
	AN6290-4	• GASKET, USE WITH INDEX 49	1	
- 50	AN6277-8	• VALVE, SHUTTLE	1	
- 51	MS21908D8	• ELBOW	2	
	AN6290-8	• GASKET, USE WITH INDEX 51	2	
	AN6291-8	• RING, BACK UP, USE WITH INDEX 51	2	
	AN6289D8	• NUT, USE WITH INDEX 51	2	
- 52	25-72035- 55	• TUBE ASSY, EMERGENCY SLAT EXTEND	1	
- 53	25-72035- 57	• TUBE ASSY, EMERGENCY SLAT EXTEND	1	
- 54	MS21903D8	• UNION	1	
	AN924-8D	• NUT, USE WITH INDEX 54	1	
	AN960D1216	• WASHER, USE WITH INDEX 54	1	
- 55	25-69203- 13	• TUBE ASSY, SLAT RETRACT PRESSURE	1	
- 56	MS21903D8	• UNION	1	
	AN6290-8	• GASKET, USE WITH INDEX 56	1	
	AN960D1216	• WASHER, USE WITH INDEX 56	1	
	AN924-8D	• NUT, USE WITH INDEX 56	1	
- 57	25-69203- 7	• TUBE ASSY, SLAT EXTEND PRESSURE	1	
- 58	25-69203- 19	• TUBE ASSY, SLAT MOTOR DRAIN	1	
- 59	MS21908D4	• ELBOW	1	
	AN893-3D	• BUSHING, USE WITH INDEX 59	1	
	AN6290-8	• GASKET, USE WITH INDEX 59	1	
	AN6290-4	• GASKET, USE WITH INDEX 59	1	
	AN6291-4	• RING, BACK UP, USE WITH INDEX 59	1	
	AN6289D4	• NUT, USE WITH INDEX 59	1	
- 60	MS21902D6	• UNION	1	
	AN6290-6	• GASKET, USE WITH INDEX 60	1	
- 61	25-72035- 63	• TUBE ASSY, EMERGENCY AIR VENT	1	
- 62	MS21912D6	• TEE	1	
	AN960D916	• WASHER, USE WITH INDEX 62	1	
	AN924-6D	• NUT, USE WITH INDEX 62	1	
- 63	25-72035- 65	• TUBE ASSY, EMERGENCY AIR VENT	1	
- 64	25-72035- 61	• TUBE ASSY, EMERGENCY AIR VENT	1	
- 65	MS21908D6	• ELBOW	1	
	AN6290-6	• GASKET, USE WITH INDEX 65	1	
	AN6291-6	• RING, BACK UP, USE WITH INDEX 65	1	
	AN6289D6	• NUT, USE WITH INDEX 65	1	
- 66	MS21902D8	• UNION	1	
	AN6290-8	• GASKET, USE WITH INDEX 66	1	
- 67	25-69203- 15	• TUBE ASSY, SLAT RETRACT PRESSURE	1	
- 68	MS21907D4	• ELBOW	1	
	AN893-3D	• BUSHING, USE WITH INDEX 68	1	
	AN6290-8	• GASKET, USE WITH INDEX 68	1	
	AN6290-4	• GASKET, USE WITH INDEX 68	1	
	AN6291-4	• RING, BACK UP, USE WITH INDEX 68	1	
	AN6289D4	• NUT, USE WITH INDEX 68	1	

FIGURE & INDEX NUMBER	PART NUMBER	1 2 3 4 5 6 7 DESCRIPTION	UNITS PER ASS'Y	USABLE ON CODE
70 - 69	25-69203- 17	• TUBE ASSY, SLAT MOTOR DRAIN	1	
- 70	25-72035- 59	• TUBE ASSY, EMERGENCY SLAT EXTEND	1	
- 71	863-1	• VALVE, PRESSURE OPERATED BY-PASS (ELE)	2	
		ATTACHING PARTS		
	AN3-17A	• BOLT	4	
	AN960-10L	• WASHER	4	
		¤----¤-¤-¤----¤		
- 72	25-69159- 1	• BLOCK ASSY, HYDRAULIC LINE SUPPORT	1	
		ATTACHING PARTS		
	AN3-24A	• BOLT	2	
	AN960D10	• WASHER	2	
	NAS43DD3-36	• SPACER	2	
		¤----¤-¤-¤----¤		

FIGURE & INDEX NUMBER	PART NUMBER	1 2 3 4 5 6 7 DESCRIPTION	UNITS PER ASS'Y	USABLE ON CODE
71 -	25-69186- 1	HYDRAULIC & EMERGENCY AIR INSTALLATION, FORWARD FUSELAGE, FUSELAGE STATION 232.00 BULKHEAD, SEE FIG. 44-14 FOR NEXT HIGHER ASSEMBLY	REF	
- 1	25-72035- 39	• TUBE ASSY, EMERGENCY LANDING GEAR DOWN	1	
- 2	MS21902D4	• UNION	4	
- 3	25-72035- 37	• TUBE ASSY, EMERGENCY LANDING GEAR DOWN	1	
- 4	MS21912D4	• TEE	1	
	AN6290-4	• GASKET, USE WITH INDEX 4	1	
	AN6291-4	• RING, BACK UP, USE WITH INDEX 4	1	
	AN6289D4	• NUT, USE WITH INDEX 4	1	
- 5	25-72035- 3	• TUBE ASSY, EMERGENCY AIR PRESSURE	1	
- 6	25-72035- 5	• TUBE ASSY, EMERGENCY AIR PRESSURE	1	
- 7	MS21908D8	• ELBOW	4	
	AN924-8D	• NUT, USE WITH INDEX 7	4	
	AN960D1216	• WASHER, USE WITH INDEX 7	4	
- 8	25-69204- 45	• TUBE ASSY, UTILITY RETURN	1	
- 9	AN938D8	• TEE	1	
	AN6290-8	• GASKET, USE WITH INDEX 9	2	
	MS21916D8-6	• REDUCER, USE WITH INDEX 9	1	
	MS21903D8	• UNION, USE WITH INDEX 9	1	
	AN924-8D	• NUT, USE WITH INDEX 9	1	
- 10	MS21908D8	• ELBOW	5	
	AN6290-8	• GASKET, USE WITH INDEX 10	5	
	AN6291-8	• RING, BACK UP, USE WITH INDEX 10	5	
	AN6289D8	• NUT, USE WITH INDEX 10	5	
- 11	25-69204- 49	• TUBE ASSY, UTILITY RETURN	1	
- 12	~~25-69204- 47~~	• TUBE ASSY, UTILITY RETURN	1	
- 13	AN939D8	• ELBOW	1	
	MS21908D8	• ELBOW, USE WITH INDEX 13	1	
	MS21903D8	• UNION, USE WITH INDEX 13	1	
	AN6290-8	• GASKET, USE WITH INDEX 13	3	
	AN6291-8	• RING, BACK UP, USE WITH INDEX 13	2	
	AN6289D8	• NUT, USE WITH INDEX 13	2	
- 14	25-69204- 27	• TUBE ASSY, UTILITY PRESSURE	1	
- 15	AN938D8	• TEE	1	
	AN6290-8	• GASKET, USE WITH INDEX 15	2	
	MS21916D8-4	• REDUCER, USE WITH INDEX 15	1	
	MS21903D8	• UNION, USE WITH INDEX 15	1	
	AN924-8D	• NUT, USE WITH INDEX 15	1	
- 16	25-69204- 31	• TUBE ASSY, UTILITY PRESSURE	1	
- 17	25-69204- 29	• TUBE ASSY, UTILITY PRESSURE	1	
- 18	25-69204- 3	• TUBE ASSY, RIGHT BRAKE OPERATE	1	
- 19	MS21902D5	• UNION	2	
- 20	25-69204- 5	• TUBE ASSY, RIGHT BRAKE OPERATE	1	
- 21	25-69204- 15	• TUBE ASSY, LEFT BRAKE OPERATE	1	
- 22	25-69204- 17	• TUBE ASSY, LEFT BRAKE OPERATE	1	
- 23	25-69204- 59	• TUBE ASSY, AILERON RETURN	1	
- 24	MS21902D8	• UNION	2	
- 25	25-69204- 61	• TUBE ASSY, AILERON RETURN	1	
- 26	25-69204- 63	• TUBE ASSY, AILERON RETURN	1	
- 27	25-69204- 73	• TUBE ASSY, AILERON PRESSURE	1	
- 28	25-69204- 75	• TUBE ASSY, AILERON PRESSURE	1	
- 29	25-69204- 77	• TUBE ASSY, AILERON PRESSURE	1	
- 30	25-69204-107	• TUBE ASSY, HYDRAULIC DRAIN	1	
- 31	MS21905D4	• TEE	1	
- 32	25-69204-109	• TUBE ASSY, HYDRAULIC DRAIN	1	
- 33	MS21914-4	• CAP	1	
	MS21907D4	• ELBOW, USE WITH INDEX 33	1	
	AN924-4D	• NUT, USE WITH INDEX 33	1	
	AN960D716	• WASHER, USE WITH INDEX 33	1	
- 34	25-69203- 21	• TUBE ASSY, SLAT MOTOR DRAIN	1	
- 35	25-69204- 87	• TUBE ASSY, NOSE LANDING GEAR UP	1	
- 36	25-69204- 89	• TUBE ASSY, NOSE LANDING GEAR UP	1	
- 37	25-69204- 99	• TUBE ASSY, NOSE LANDING GEAR DOWN	1	
- 38	25-69204-101	• TUBE ASSY, NOSE LANDING GEAR DOWN	1	
- 39	25-69203- 9	• TUBE ASSY, SLAT RETRACT PRESSURE	1	
- 40	20-100-50-10	• RESTRICTOR (GPPI)	2	
	MS21916D8-6	• REDUCER, USE WITH INDEX 40	4	
	AN6290-6	• GASKET, USE WITH INDEX 40	4	
- 41	25-69203- 11	• TUBE ASSY, SLAT RETRACT PRESSURE	1	
- 42	25-69203- 3	• TUBE ASSY, SLAT EXTEND PRESSURE	1	
- 43	AN939D8	• ELBOW	1	
	MS21902D8	• UNION, USE WITH INDEX 43	1	
	AN6290-8	• GASKET, USE WITH INDEX 43	2	
- 44	25-69203- 5	• TUBE ASSY, SLAT EXTEND PRESSURE	1	
- 45	AV14C1138	• VALVE, SOLENOID HYDRAULIC SELECTOR (GCO) MCDONNELL SPEC 25-69008-38	1	

Forward Fuselage

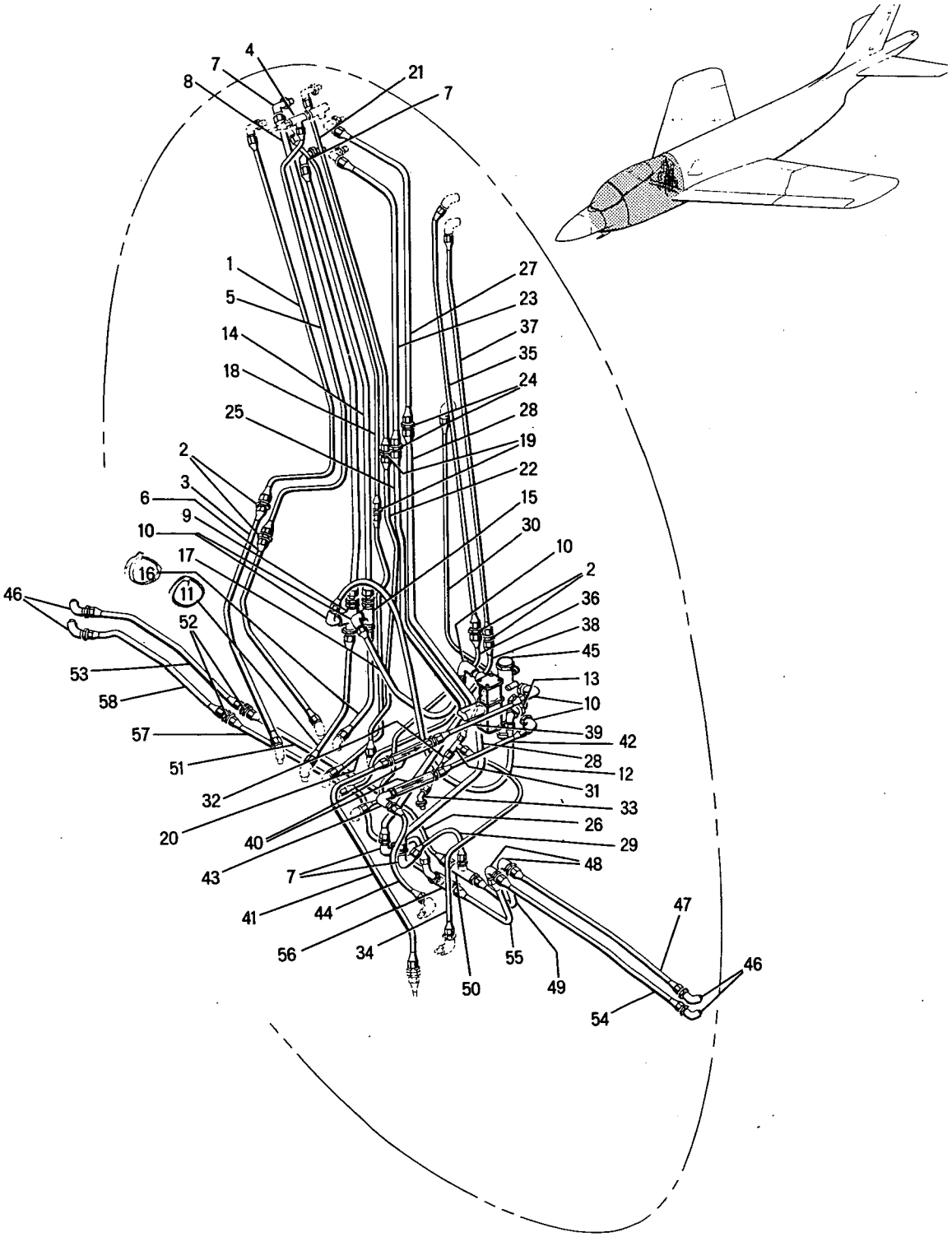

PC25-70A

Figure 71 -- Forward Fuselage Hydraulic and Emergency Air Installation
(Forward Side of Bulkhead, Fuselage Station 232.0)

FIGURE & INDEX NUMBER	PART NUMBER	1 2 3 4 5 6 7 DESCRIPTION	UNITS PER ASS'Y	USABLE ON CODE
71 -		ATTACHING PARTS		
	AN3H5A	• BOLT	4	
	AN960D10	• WASHER	4	
		¤----¤-¤-¤----¤		
- 46	MS21907D6	• ELBOW	4	
	AN924-6D	• NUT, USE WITH INDEX 46	4	
	AN960D916	• WASHER, USE WITH INDEX 46	4	
- 47	25-69204- 85	• TUBE ASSY, AILERON PRESSURE	1	
- 48	MS21908D6	• ELBOW	2	
	AN924-6D	• NUT, USE WITH INDEX 48	2	
	AN960D916	• WASHER, USE WITH INDEX 48	2	
- 49	25-69204- 83	• TUBE ASSY, AILERON PRESSURE	1	
- 50	AN938D8	• TEE	1	
	MS21902D8	• UNION, USE WITH INDEX 50	1	
	MS21916D8-6	• REDUCER, USE WITH INDEX 50	2	
	AN6290-8	• GASKET, USE WITH INDEX 50	3	
- 51	25-69204- 79	• TUBE ASSY, AILERON PRESSURE	1	
- 52	MS21903D6	• UNION	2	
	AN924-6D	• NUT, USE WITH INDEX 52	2	
- 53	25-69204- 81	• TUBE ASSY, AILERON PRESSURE	1	
- 54	25-69204- 71	• TUBE ASSY, AILERON RETURN	1	
- 55	25-69204- 69	• TUBE ASSY, AILERON RETURN	1	
- 56	AN938D8	• TEE	1	
	MS21916D8-6	• REDUCER, USE WITH INDEX 56	2	
	MS21907D8	• ELBOW, USE WITH INDEX 56	1	
	AN6290-8	• GASKET, USE WITH INDEX 56	3	
	AN6291-8	• RING, BACK UP, USE WITH INDEX 56	1	
	AN6289D8	• NUT, USE WITH INDEX 56	1	
- 57	25-69204- 65	• TUBE ASSY, AILERON RETURN	1	
- 58	25-69204- 67	• TUBE ASSY, AILERON RETURN	1	

Forward Fuselage

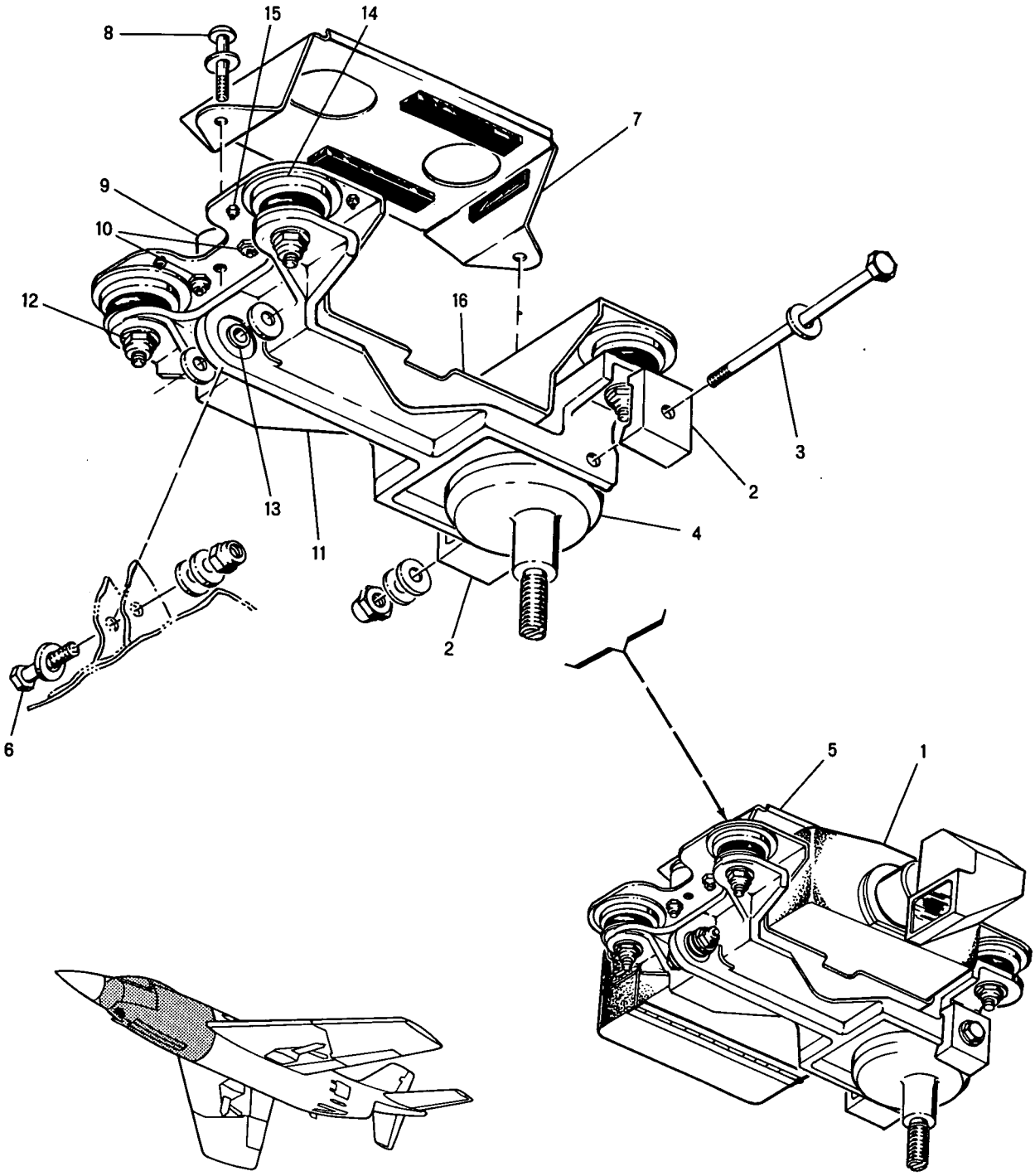

PC25-77

Figure 72 -- Gun Camera Installation

FIGURE & INDEX NUMBER	PART NUMBER	1 2 3 4 5 6 7 DESCRIPTION	UNITS PER ASS'Y	USABLE ON CODE
72 -	25-71007- 1	CAMERA INSTALLATION, GUN, SEE FIG. 44-18 FOR NEXT HIGHER ASSEMBLY	REF	
- 1	AN-N6A	. CAMERA, GUN, GOVERNMENT INSTALLED, GFP	1	
- 2	25-71248- 3	. CLAMP, GUN CAMERA ADJUSTMENT LOCKING	2	
		ATTACHING PARTS		
- 3	AN3-31A	. BOLT	1	
	AN960D10	. WASHER	2	
	AN960D10L	. WASHER	1	
	AN364-1032	. NUT	1	
		¤----¤-¤-¤----¤		
- 4	25-71247- 3	. CAM, GUN CAMERA ADJUSTMENT	1	
- 5	25-71203- 1	. MOUNT ASSY, GUN CAMERA SHOCK	1	
		ATTACHING PARTS		
- 6	AN3-10A	. BOLT	1	
	AN960D10L	. WASHER	1	
	AN960D10	. WASHER	4	
	AN364-1032	. NUT	1	
		¤----¤-¤-¤----¤		
- 7	25-71206- 1	. . CLAMP ASSEMBLY, GUN CAMERA MOUNT	1	
		ATTACHING PARTS		
- 8	AN23-10A	. . BOLT	2	
	AN960D10	. . WASHER	2	
	AN365-1032	. . NUT	2	
		¤----¤-¤-¤----¤		
- 9	15-60225	. . RETAINER, NUT SPACER	2	
		ATTACHING PARTS		
- 10	AN515-4R6	. . SCREW	4	
	AN960D1	. . WASHER	4	
	AN365-440	. . NUT	4	
		¤----¤-¤-¤----¤		
- 11	25-71204- 1	. . SUPPORT ASSEMBLY, GUN CAMERA	1	
		ATTACHING PARTS		
- 12	AN515-8R24	. . SCREW	4	
	AN960D8	. . WASHER	8	
	AN365-832	. . NUT	4	
		¤----¤-¤-¤----¤		
- 13	LS3	. . . BEARING (HEC)	1	
- 14	6550-1	. . MOUNT, SHOCK (BLC)	4	
		ATTACHING PARTS		
- 15	AN515-6R7	. . SCREW	8	
	AN960D6	. . WASHER	16	
	AN365-632	. . NUT	8	
		¤----¤-¤-¤----¤		
- 16	25-71205- 3	. . MOUNT, GUN CAMERA	1	

Forward Fuselage

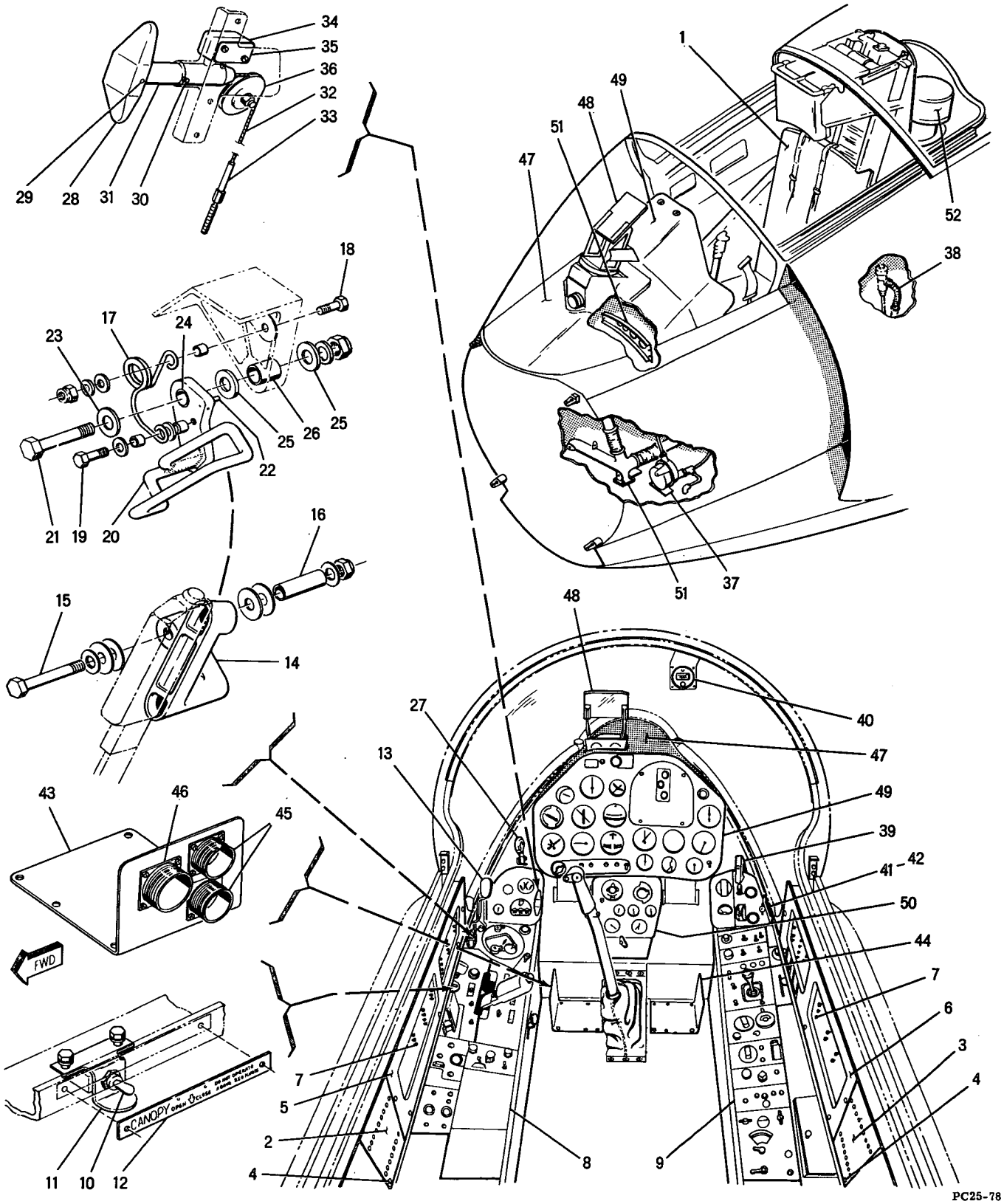

PC25-78

Figure 73 -- Cockpit Furnishings Installation

FIGURE & INDEX NUMBER	PART NUMBER	1 2 3 4 5 6 7 DESCRIPTION	UNITS PER ASS'Y	USABLE ON CODE
73 -	25-80000- 1	FURNISHINGS INSTL, COCKPIT, SEE FIG. 44-4 FOR NEXT HIGHER ASSY	REF	
- 1	25-82000- 1	. SEAT INSTL, PILOTS EJECTION, SEE FIG. 87	1	
	9M45-1	. NAMEPLATE, AIRPLANE IDENTIFICATION (MDA)	1	
- 2	25-81085- 1	. COVER ASSY, ELECT LH	1	
- 3	25-81085- 2	. COVER ASSY, ELECT RH	1	
- 4	98292-1-.130	. . STUD, (MKL) USE WITH 99947P.130 RECP (MKL)	1	
	99836	. . PIN, CROSS (MKL)	1	
	25-89021- 7	. . PLACARD, INTERIOR LIGHTS RESISTORS WIRING DIAGRAM, RH ONLY	1	A-B
- 5	25-81084-303	. COVER ASSEMBLY, CIRCUIT BREAKER LH, SEE FIG. 84	1	
- 6	25-81084-304	. COVER ASSEMBLY, CIRCUIT BREAKER RH, SEE FIG. 84	1	
- 7	25-76050-307	. PANEL ASSY, CIRCUIT BREAKER, SEE FIG. 84	1	A
	25-76050-309	. PANEL ASSY, CIRCUIT BREAKER, SEE FIG. 84	1	B
	25-76084- 1	. PANEL ASSY, CIRCUIT BREAKER, LEFT SIDE, SEE FIG. 84	1	C
	25-76084-301	. PANEL ASSY, CIRCUIT BREAKER, LEFT SIDE, SEE FIG. 84	1	D-F
	25-76085- 1	. PANEL ASSY, CIRCUIT BREAKER, RIGHT SIDE, SEE FIG. 84	1	C-F
- 8	25-80001- 1	. EQUIPMENT INSTALLATION, LEFT HAND CONSOLE, SEE FIG. 74	1	
- 9	25-80002- 1	. EQUIPMENT INSTALLATION, RIGHT HAND CONSOLE, SEE FIG. 79	1	A-B
	25-80002-301	. EQUIPMENT INSTALLATION, RIGHT HAND CONSOLE, SEE FIG. 79	1	C-F
	25-35056- 1	. CONTROLS INSTALLATION, COCKPIT CANOPY	1	
- 10	AN3021-7	. . SWITCH	1	
- 11	25-35077- 3	. . GUARD, CANOPY CONTROL SWITCH	1	
- 12	25-89009- 3	. . NAMEPLATE, CANOPY SWITCH	1	
- 13	25-35051- 1	. HANDLE ASSY, CANOPY EMERGENCY, SEE FIG. 86	1	
	25-80077- 1	. HOLDBACK INSTALLATION, THROTTLE CATAPULT	1	A-B
- 14	25-80078- 3	. . HANDLE, CATAPULT THROTTLE HOLDBACK	1	A-B
		ATTACHING PARTS		
- 15	AN6-21A	. . BOLT	1	
	AN960D916L	. . WASHER	1	
	AN960D916	. . WASHER	3	
	4M36-03002	. . WASHER (MDA)	2	
	AN365-624	. . NUT	1	
		¤----¤-¤-¤----¤		
- 16	NAS72-6-109	. . BUSHING	1	A-B
	25-80056- 1	. HOLDBACK INSTALLATION, THROTTLE CATAPULT	1	C-F
- 17	25-80059- 3	. . SPRING, CATAPULT THROTTLE HOLD BACK	1	C-F
		ATTACHING PARTS		
- 18	AN3-5A	. . BOLT	1	
	NAS43-3-12	. . SPACER	1	
	4M36-01005	. . WASHER (MDA)	1	
	AN960-10	. . WASHER	1	
	AN364-1032	. . NUT	1	
- 19	AN3H11A	. . BOLT	1	
	4M36-01005	. . WASHER (MDA)	2	
	NAS43-3-12	. . SPACER	2	
		¤----¤-¤-¤----¤		
- 20	25-80057- 1	. . HANDLE ASSY, CATAPULT THROTTLE HOLDBACK	1	C-F
		ATTACHING PARTS		
- 21	AN6-17A	. . BOLT	1	
	AN960-616	. . WASHER	1	
	AN365-624	. . NUT	1	
		¤----¤-¤-¤----¤		
- 22	52-028-125-0625	. . PIN, ROLL (EN)	2	C-F
- 23	4M36-03003	. . WASHER (MDA)	1	
- 24	NAS72-6-006	. . BUSHING	1	
- 25	4M36-03004	. . WASHER (MDA)	2	
- 26	NAS72-6-010	. . BUSHING	1	
- 27	25-68006- 1	. CONTROL INSTL, LANDING GEAR, SEE FIG. 85	1	A-B
	25-68006-301	. CONTROL INSTL, LANDING GEAR, SEE FIG. 85	1	C-F
	25-55000- 1	. RELEASE INSTALLATION, EXTERNAL STORES	1	
	25-55058- 1	. . HANDLE ASSEMBLY, EXTERNAL STORES RELEASE	1	
- 28	25-55059- 5	. . . KNOB, EXTERNAL STORES RELEASE HANDLE	1	
		ATTACHING PARTS		
- 29	79-022-094-0937	. . . PIN, ROLL (EN)	1	
		¤----¤-¤-¤----¤		
- 30	79-040-187-0812	. . . PIN, ROLL (EN)	1	

FIGURE & INDEX NUMBER	PART NUMBER	1 2 3 4 5 6 7 DESCRIPTION	UNITS PER ASS'Y	USABLE ON CODE
73 - 31	25-55060- 5	. . . TUBE, EXTERNAL STORES RELEASE HANDLE	1	
	AN664C3	. . . TERMINAL	1	
- 32	25-55058- 3	. . . CABLE	1	
- 33	AN666-3LH	. . . TERMINAL	1	
- 34	6AS8	. . SWITCH ASSY (MCS)	1	
- 35	5M6-4	. . INSULATOR (MDA)	1	
- 36	AN219-2	. . PULLEY	1	
- 37	25-60006- 1	. SYSTEM INSTL, PITOT, STATIC, TURN & BANK & ANTI-G PRESSURE COCKPIT, SEE FIG. 93	1	A-B
	25-60006-301	. SYSTEM INSTL, PITOT, STATIC, TURN & BANK & ANTI-G PRESSURE COCKPIT, SEE FIG. 93	1	C-F
- 38	25-80003- 1	. SYSTEM INSTL, OXYGEN & ANTI-BLACKOUT, SEE FIG. 93	1	
- 39	25-84030- 1	. CONTROL ASSY, ARRESTING GEAR, SEE FIG. 86	1	
- 40	R88C0779-525	. COMPASS, STAND-BY, AN5766T3, AN 05-15-71, GFP	1	
- 41	R88C0152-000	. CARD, COMPASS CORRECTION, 9860-3 (BUA) GFP	1	
- 42	R88H0500-000	. HOLDER, AIR-SPEED CORRECTION CARD, 1083(BUA) GFP	1	
- 43	25-87106- 7	. ADAPTER ASSEMBLY, APQ50 RADAR COMPONENT LH	1	
- 44	25-87106- 8	. ADAPTER ASSEMBLY, APQ50 RADAR COMPONENT RH	1	
		ATTACHING PARTS		
	AN3-10A	. BOLT	8	
	AN960D10L	. WASHER	8	
		¤----¤-¤-¤----¤		
- 45	2182-10	. . RECEPTACLE, STOWAGE (CED)	2	A-C
- 46	2182-11	. . RECEPTACLE, STOWAGE (CED)	1	A-C
- 47	25-60096- 1	. SHIELD ASSEMBLY, FORWARD INSTRUMENT	1	
	98292-2-.250	. . STUD (MKL) USE WITH 99947P.130 RECEPTACLE (MKL)	2	
	99836	. . PIN, CROSS (MKL)	2	
- 48	25-87002- 1	. RADAR & GUN SIGHT INSTL, SEE FIG. 83	1	
- 49	25-60000-303	. PANEL ASSEMBLY, MAIN INST, SEE FIG. 81	1	A-B
	25-60000-305	. PANEL ASSEMBLY, MAIN INST, SEE FIG. 81	1	C
- 50	25-60003- 1	. PANEL ASSEMBLY, SUB INST, SEE FIG. 82	1	
- 51	25-60111- 3	. SUPPORT, INSTRUMENT PANEL RECEPTACLE	1	A-B
	25-60111- 5	. SUPPORT, INSTRUMENT PANEL RECEPTACLE	1	C-F
- 52	25-83016- 1	. EQUIPMENT INSTALLATION, COCKPIT HEAT & VENTILATION, SEE FIG. 94	1	

FIGURE & INDEX NUMBER	PART NUMBER	1 2 3 4 5 6 7 DESCRIPTION	UNITS PER ASS'Y	USABLE ON CODE
74 -	25-80001- 1	EQUIPMENT INSTALLATION, LEFT HAND CONSOLE, SEE FIG. 73-8 FOR NEXT HIGHER ASSEMBLY	REF	
- 1	25-81001- 1	• COVER ASSEMBLY, LH CONSOLE FORWARD SIDE	1	
- 2	98292-1-.120	• • STUD, (MKL) USE WITH 99833P.130 RECEPTACLE (MKL)	4	
	99836	• • PIN, CROSS (MKL)	4	
- 3	25-81002- 1	• COVER ASSEMBLY, LH CONSOLE CENTER SIDE	1	
- 4	98292-1-.120	• • STUD, (MKL) USE WITH 99833P.130 RECEPTACLE (MKL)	5	
	99836	• • PIN, CROSS (MKL)	5	
- 5	25-81006- 1	• PANEL ASSEMBLY, LH CONSOLE SUB INSTRUMENT SEE FIG. 76	1	
- 6	25-81005- 1	• PANEL ASSEMBLY, LH FORWARD CONSOLE	1	
	25-81005- 5	• • WIRE ASSEMBLY	1	
- 7	AN3102-14S5P	• • • RECEPTACLE	1	
- 8	36XP13-2	• • CAP ASSEMBLY (DLC)	1	
- 9	36XP13-50	• • RING, COUPLING (DLC)	1	
- 10	36410XP13-313	• • BODY ASSEMBLY (DLC)	1	
- 11	25-81065- 1	• • REGULATOR ASSEMBLY, OXYGEN	1	
		ATTACHING PARTS		
	AN515-8R16	• • SCREW	4	
		¤----¤-¤-¤----¤		
- 12	25-81066- 3	• • • ARM, OXYGEN REGULATOR SHUTOFF, ALTERED FROM 714487-1 (ECD)	1	
- 13	23-81099- 3	• • • ARM, OXYGEN REGULATOR CONTROL	1	
		ATTACHING PARTS		
	AN526-836-12	• • • SCREW	1	
	AN936B8	• • • WASHER	1	
		¤----¤-¤-¤----¤		
- 14	R83PR2867A1	• • • REGULATOR, OXYGEN, LESS SAFETY PRESSURE ARM & 714487-1 (ECD) GFP	1	
- 15	25-81064- 3	• • SPACER, OXYGEN REG	1	
- 16	25-81005- 15	• • SHIELD	1	
- 17	A5374-327	• • LIGHT ASSY (GMC)	5	
- 18	25-81005- 11	• • PANEL, LIGHTING	1	
- 19	25-81005- 7	• • PANEL, LIGHTING	1	
	25-81005- 3	• • PANEL ASSY, STRUCT	1	
- 20	PF3-1/2-38	• • • STUD (DZ)	5	
- 21	PS3-1/2	• • • SPRING (DZ)	5	
- 22	PC3-1/2	• • • CUP (DZ)	5	
	25-81005- 9	• • • PANEL	1	
- 23	25-81007-303	• PANEL ASSEMBLY, ENGINE CONTROL INBOARD, SEE FIG. 77	1	
- 24	25-54004-301	• QUADRANT INSTALLATION, ENGINE POWER, SEE FIG. 75	1	
- 25	25-81008- 1	• PANEL ASSEMBLY, ENGINE CONTROL OUTBOARD, SEE FIG. 78	1	A-B
	25-81008-301	• PANEL ASSEMBLY, ENGINE CONTROL OUTBOARD, SEE FIG. 78	1	C
	25-68007- 1	• HANDLE INSTALLATION, EMERGENCY HYDRAULIC PUMP	1	A-B
	25-68007-301	• HANDLE INSTALLATION EMERGENCY HYDRAULIC PUMP	1	C-F
- 26	25-68064- 3	• • SPRING, EMERGENCY HYD PUMP CONTROL HANDLE	1	
		ATTACHING PARTS		
- 27	AN3-14A	• • BOLT	1	
	AN960D10	• • WASHER	2	
	NAS43DD6-20	• • SPACER	2	
	AN960D616	• • WASHER	2	
	NAS42DD6-59	• • SPACER	1	
	AN364-1032	• • NUT	1	
- 28	AN3-7A	• • BOLT	1	
	AN960D10	• • WASHER	2	
	NAS42DD6-10	• • SPACER	1	
	AN364-1032	• • NUT	1	
		¤----¤-¤-¤----¤		
- 29	25-68063- 1	• • HANDLE ASSEMBLY, EMERGENCY HYD PUMP CONTROL	1	
		ATTACHING PARTS		
- 30	AN4-15A	• • BOLT	1	
	AN960D416	• • WASHER	2	
	NAS73-4-014	• • BUSHING	1	
	AN364-428	• • NUT	1	
		¤----¤-¤-¤----¤		
	4M33P7-027	• • • BUSHING (MDA)	1	
- 31	25-68065- 3	• • STOP, EMERGENCY HYD PUMP CONTROL HANDLE	1	A-B
	25-68050- 1	• • STOP ASSY, EMER HYD PUMP CONTROL HANDLE	1	C-F
- 32	C775/APG30	• CONTROL, RADAR SET, GFP	1	A-C

Forward Fuselage

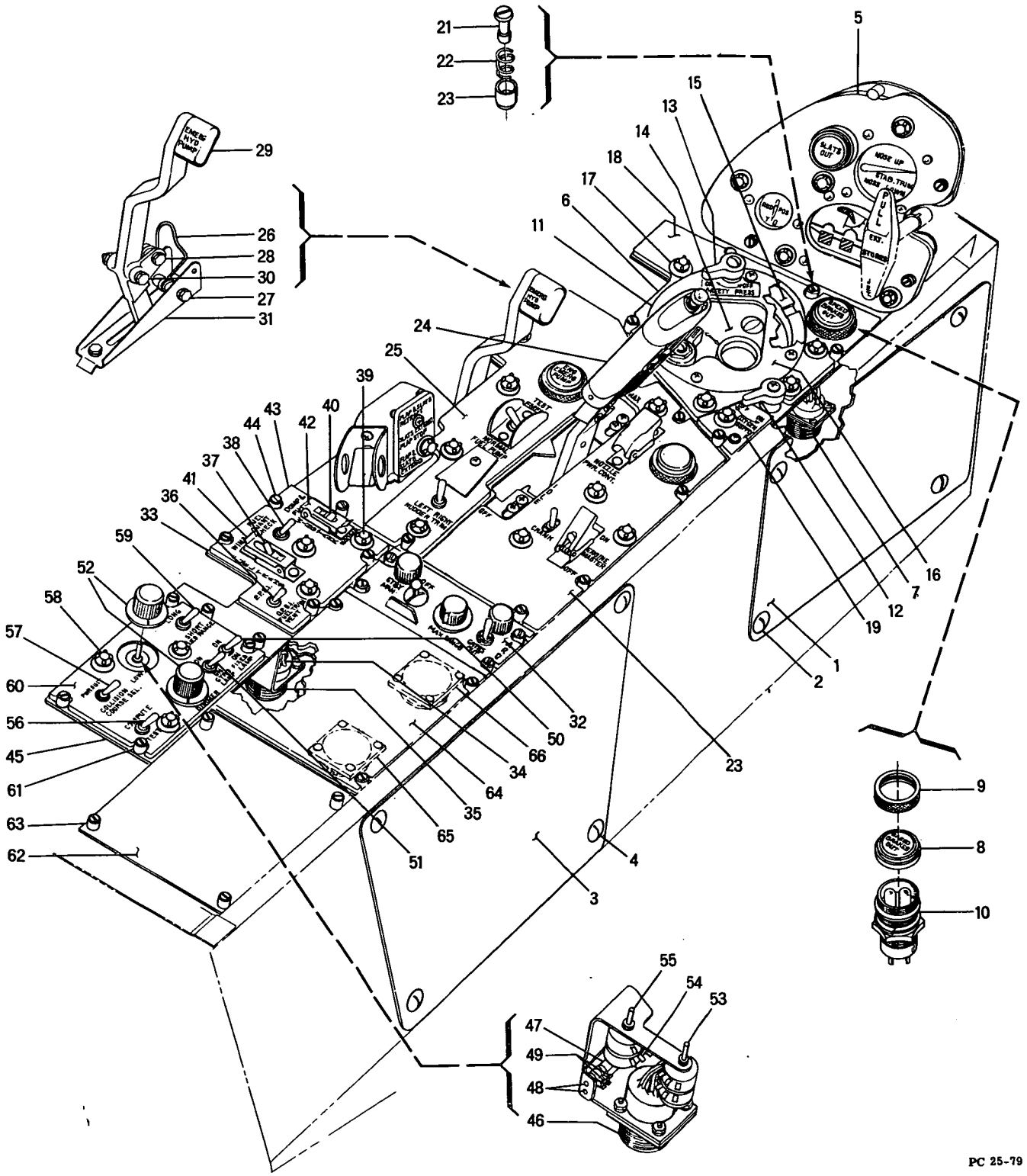

Figure 74 -- Left Hand Console Equipment Installation

FIGURE & INDEX NUMBER	PART NUMBER	1 2 3 4 5 6 7 DESCRIPTION	UNITS PER ASS'Y	USABLE ON CODE
74 - 33	25-81027- 1	• PANEL ASSEMBLY, FUEL CONTROLS	1	A-B
	25-81027-301	• PANEL ASSEMBLY, FUEL CONTROLS	1	C
- 34	25-81027- 7	• • WIRE ASSEMBLY	1	
- 35	AN3102-22-4P	• • • RECEPTACLE	1	
- 36	AN3021-3	• • SWITCH, FUEL TANK VENT	1	
- 37	AN3226-1	• • SWITCH, FUEL TRANSFER	1	
		ATTACHING PARTS		
	AN507-632R6	• • SCREW	2	
		¤----¤-¤-¤----¤		
- 38	AN3021-8	• • SWITCH, FUEL QUANTITY CHECK	1	
- 39	A5374-327	• • LIGHT ASSY (GMC)	3	
- 40	AN3226-3	• • SWITCH, WING TANK	1	
		ATTACHING PARTS		
	AN507-632R6	• • SCREW	2	
		¤----¤-¤-¤----¤		
	25-81027- 21	• • PANEL ASSEMBLY, LIGHTING	1	
- 41	50A1A3	• • • GUARD, SWITCH (BUA) GFP	1	
- 42	23-60115- 5	• • • GUARD, MODIFIED FLAT TYPE SWITCH	1	
- 43	25-81027- 19	• • • PANEL, LIGHTING	1	
	25-81027- 3	• • PANEL ASSEMBLY, STRUCTURAL	1	A-B
	25-81027- 15	• • PANEL ASSEMBLY, STRUCTURAL	1	C
- 44	PF3-1/2-38	• • • STUD (DZ)	4	
	PS3-1/2	• • • SPRING (DZ) USE WITH INDEX 44	4	
	PC3-1/2	• • • CUP (DZ) USE WITH INDEX 44	4	
	PF3-1/2-38	• • • STUD (DZ)	2	C
	PS3-1/2	• • • SPRING (DZ)	2	C
	PC3-1/2	• • • CUP (DZ)	2	C
	25-81027- 13	• • • PANEL, STRUCTURAL	1	A-B
	25-81027- 17	• • • PANEL, STRUCTURAL	1	C
- 45	25-81063- 1	• PANEL ASSEMBLY, GUN SIGHT CONTROL	1	
	25-81063- 5	• • WIRE ASSEMBLY	1	
- 46	AN3102-28-21P	• • • RECEPTACLE	1	
- 47	1023	• • RESISTOR (OM)	2	
		ATTACHING PARTS		
- 48	NAS229-35	• • SCREW	2	
	AN960D10	• • WASHER	2	
	AN364-1032	• • NUT	2	
		¤----¤-¤-¤----¤		
- 49	1058	• • LUG, ADJUSTABLE (OM)	4	
- 50	AN3021-1	• • SWITCH, FIXED LAMP	1	
- 51	AN3027-1	• • SWITCH, GYRO LAMP	1	
- 52	23-81098- 1	• • KNOB ASSEMBLY, ROUND CONTROL	2	
	AN565D8H4	• • • SCREW	1	
- 53	BUO-814281	• • POTENTIOMETER	1	
	AN960D616	• • WASHER	1	
- 54	RC20GE201J	• • RESISTOR	1	
- 55	25-76021- 1	• • POTENTIOMETER, DUAL	1	
- 56	AN3021-3	• • SWITCH, COMPUTE & TEST	1	
- 57	AN3027-3	• • SWITCH, COURSE SELECTOR	1	
- 58	A5374-327	• • LIGHT ASSY (GMC)	3	
- 59	4AT4	• • SWITCH, FIXED RANGE (MCS)	1	
		ATTACHING PARTS		
	AN507-632R6	• • SCREW	2	
		¤----¤-¤-¤----¤		
- 60	25-81063- 9	• • PANEL, LIGHTING, PLASTIC	1	
	25-81063- 3	• • PANEL ASSEMBLY, STRUCTURAL	1	
- 61	PF3-1/2-38	• • • STUD (DZ)	4	
	PS3-1/2	• • • SPRING (DZ) USE WITH INDEX 61	4	
	PC3-1/2	• • • CUP (DZ) USE WITH INDEX 61	4	
	25-81063- 7	• • • PANEL, STRUCT	1	
- 62	25-81061- 1	• PANEL ASSEMBLY LH CONSOLE AFT FILLER	1	A-B
	25-81069- 3	• PANEL ASSEMBLY, LH CONSOLE AFT FILLER	1	C-F
- 63	PF3-1/2-38	• • STUD, (DZ)	4	
	PS3-1/2	• • SPRING (DZ) USE WITH INDEX 63	4	
	PC3-1/2	• • CUP (DZ) USE WITH INDEX 63	4	
- 64	25-87106- 11	• ADAPTER ASSEMBLY, APQ50 RADAR COMPONENTS	1	A-C
- 65	2182-10	• • RECEPTACLE, STOWAGE (CED)	1	
- 66	2182-11	• • RECEPTACLE, STOWAGE (CED)	1	
	PF3-1/2-38	• • STUD (DZ)	4	
	PS3-1/2	• • SPRING (DZ)	4	
	PC3-1/2	• • CUP (DZ)	4	

Forward Fuselage

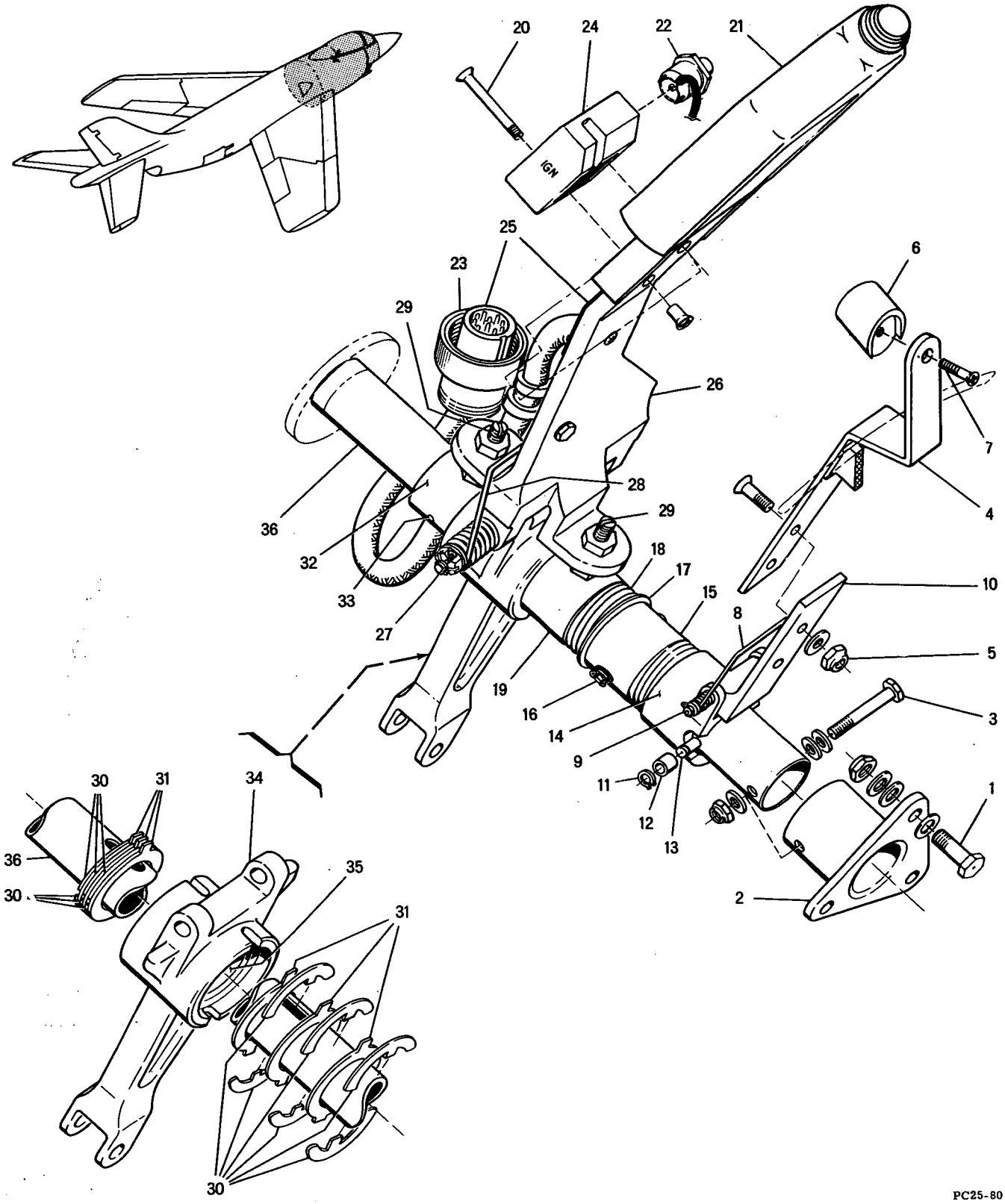

Figure 75 -- Engine Power Quadrant Installation

FIGURE & INDEX NUMBER	PART NUMBER	1 2 3 4 5 6 7 DESCRIPTION	UNITS PER ASS'Y	USABLE ON CODE
75 -	25-54004-301	QUADRANT INSTL, ENGINE POWER, SEE FIG. 74-24 FOR NEXT HIGHER ASSY	REF	
- 1	AN3-5A	• BOLT	3	
	AN960D10L	• WASHER	3	
	AN960D10	• WASHER	3	
	4M23A10	• WASHER (MDA)	3	
	AN364-1032	• NUT	3	
- 2	25-54057- 7	• HUB, POWER QUADRANT, FOR FUTURE PROCUREMENT USE 25-54057-9	1	A
	25-54057- 9	• HUB, POWER QUADRANT; USE FOR FUTURE PROCUREMENT TO REPLACE 25-54057-7	1	
		ATTACHING PARTS		
- 3	NAS464-3A21	• BOLT	1	
	4M23A10	• WASHER (MDA)	2	
	AN960D10L	• WASHER	1	
	AN364-1032	• NUT	1	
		¤----¤-¤-¤----¤		
- 4	25-54070-301	• HANDLE ASSEMBLY, POWER QUADRANT FRICTION LOCK	1	
		ATTACHING PARTS		
- 5	AN509-10R12	• SCREW	2	
	AN960D10	• WASHER	2	
	AN364-1032	• NUT	2	
		¤----¤-¤-¤----¤		
- 6	25-54075- 3	• KNOB, POWER QUAD FRICTION LEVER	1	
		ATTACHING PARTS		
- 7	AN507-832R8	• SCREW	1	
		¤----¤-¤-¤----¤		
	25-54004- 5	• QUADRANT ASSEMBLY	1	
- 8	25-54069- 3	• • SPRING, POWER QUADRANT FRICTION LOCK	1	
		ATTACHING PARTS		
- 9	AN393-61	• • PIN, FLAT HEAD	1	
	AN960-10	• • WASHER	1	
	AN381-2-6	• • PIN, COTTER	1	
		¤----¤-¤-¤----¤		
- 10	25-54072- 3	• • FITTING, POWER QUADRANT FRICTION LOCK	1	
- 11	NAS51-18	• • RING, EXTENAL RETAINER	2	
- 12	NAS76A3-008	• • BUSHING	2	
- 13	19-82041-156	• • PIN, EXTERNAL RETAINER RING	1	
- 14	25-54067- 3	• • CAM, POWER QUADRANT	1	
- 15	25-54062- 5	• • SLEEVE, POWER QUADRANT ADJUSTING	1	
		ATTACHING PARTS		
- 16	AN393-43	• • PIN	1	
	AN960D10	• • WASHER	1	
	AN381-2-6	• • PIN, COTTER	1	
		¤----¤-¤-¤----¤		
- 17	4M36-10006	• • WASHER (MDA)	1	
- 18	25-54063- 5	• • SPRING, POWER QUADRANT COMPRESSION	1	
- 19	25-54066- 9	• • COLLAR, POWER QUADRANT	1	
	25-54068- 1	• • GRIP ASSEMBLY, POWER QUADRANT	1	
		ATTACHING PARTS		
- 20	AN509-10R24	• • SCREW	2	
	52-1650-02	• • NUT, FLUSH (EN)	2	
		¤----¤-¤-¤----¤		
- 21	68000	• • • GRIP (ESSX) LESS AN3106-18-1P PLUG	1	
- 22	C1006	• • • SWITCH (RHS)	1	
	25-54068- 3	• • • WIRE ASSEMBLY	1	
- 23	3106BS22-14P	• • • • PLUG (CED) USE WITH MS29513-22 O RING ALTERNATE AN3108B22-14P, USE WITH MS29513-22 O RING	1	
- 24	25-81088- 3	• • SUPPORT, IGNITION SWITCH	1	
- 25	25-54074- 3	• • PLATE, WIRE BUNDLE COVER	1	
- 26	25-54055- 3	• • ARM, POWER QUAD.	1	
		ATTACHING PARTS		
- 27	AN4-47	• • BOLT	1	
	AN960-416	• • WASHER	2	
	AN320-4	• • NUT	1	
	AN381-2-12	• • PIN, COTTER	1	
		¤----¤-¤-¤----¤		
- 28	25-54051- 3	• • SPRING, POWER QUADRANT LATERAL PIVOT	1	
- 29	NAS428K4-6	• • BOLT	2	
	AN316-4R	• • NUT	4	
- 30	25-54064- 3	• • SPACER, POWER QUADRANT	12	
- 31	25-54065- 5	• • WASHER, POWER QUADRANT	6	

FIGURE & INDEX NUMBER	PART NUMBER	1 2 3 4 5 6 7 DESCRIPTION	UNITS PER ASS'Y	USABLE ON CODE
75 - 32	25-54066- 7	• • COLLAR, POWER QUADRANT	1	
		ATTACHING PARTS		
- 33	79-040-187-1250	• • PIN, ROLL (EN)	1	
		¤----¤-¤-¤----¤		
- 34	25-54060-301	• • LEVER ASSY, POWER QUADRANT, FOR FUTURE PROCUREMENT USE 25-54060-303	1	A
	25-54060-303	• • LEVER ASSY, POWER QUADRANT, USE FOR FUTURE PROCUREMENT TO REPLACE 25-54060-301	1	
- 35	4M33P16-022	• • • BUSHING (MDA)	1	
- 36	25-54061- 5	• • SHAFT, POWER QUAD.	1	

Forward Fuselage

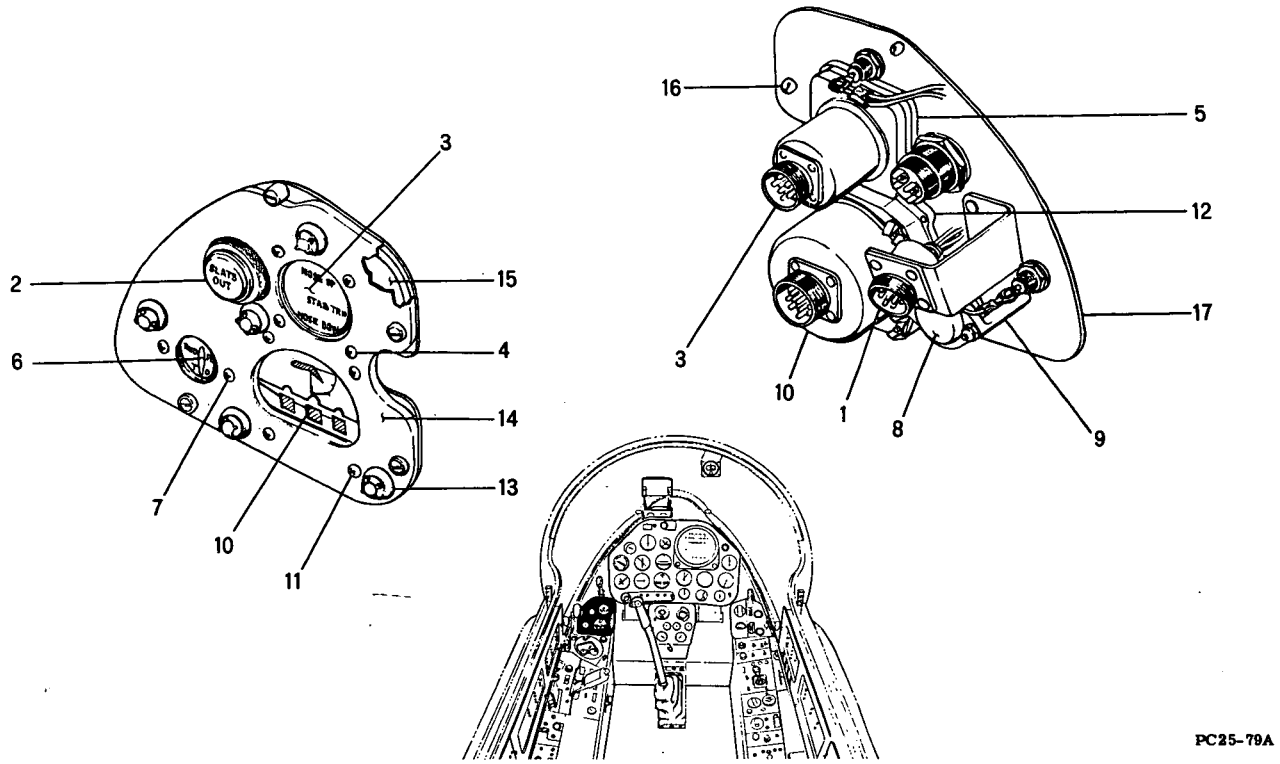

Figure 76 -- Left Hand Console Sub Instrument Panel Assembly

FIGURE & INDEX NUMBER	PART NUMBER	1 2 3 4 5 6 7 DESCRIPTION	UNITS PER ASS'Y	USABLE ON CODE
76 -	25-81006- 1	PANEL ASSEMBLY, LH CONSOLE SUB INSTRUMENT; SEE FIG. 74-5 FOR NEXT HIGHER ASSEMBLY	REF	
	25-81006- 5	• BUNDLE ASSEMBLY, WIRE	1	
- 1	AN3102-18-1P	• • RECEPTACLE	1	
- 2	36XP13-4	• BODY ASSEMBLY (DLC)	1	
	36410XP13-313	• CAP ASSEMBLY (DLC) USE WITH INDEX 2	1	
	36XP13-50	• RING, COUPLING (DLC) USE WITH INDEX 2	1	
- 3	8DJ50GAH1	• INDICATOR, STABILATOR TRIM POSITION (GEMI)	1	
		ATTACHING PARTS		
- 4	AN515B6R18	• SCREW	4	
		¤----¤-¤-¤----¤		
- 5	25-60071- 3	• SPACER, INSTRUMENT SMALL	1	
- 6	20300-102A100A1	• INDICATOR, RUDDER TRIM POSITION (ECP)	1	
		ATTACHING PARTS		
- 7	AN515B6R40	• SCREW	2	
	AN960D6L	• WASHER	2	
	AN364-632	• NUT	2	
		¤----¤-¤-¤----¤		
- 8	78RS4	• SOCKET (AMP)	1	
- 9	25-81087- 3	• SUPPORT, MINIATURE INSTRUMENT	1	
- 10	R8811888-000	• INDICATOR, WHEEL & FLAP POSITION, AN5780T3, AN 05-55A-11, GFP	1	
		ATTACHING PARTS		
- 11	AN515B6R18	• SCREW	4	
		¤----¤-¤-¤----¤		
- 12	25-60070- 3	• SPACER, INSTRUMENT LARGE FLAT	1	
- 13	MS25010-3	• LIGHT ASSEMBLY	5	
- 14	25-81006- 9	• COVER	1	
- 15	25-81006- 11	• PANEL, LIGHTING	1	
	25-81006- 3	• PANEL ASSY, STRUCT	1	
- 16	PF3-1/2-38	• • STUD (DZ)	4	
	PS3-1/2	• • SPRING (DZ) USE WITH INDEX 16	4	
	PC3-1/2	• • CUP (DZ) USE WITH INDEX 16	4	
- 17	25-81006- 7	• • PANEL, STRUCTURAL	1	

Forward Fuselage

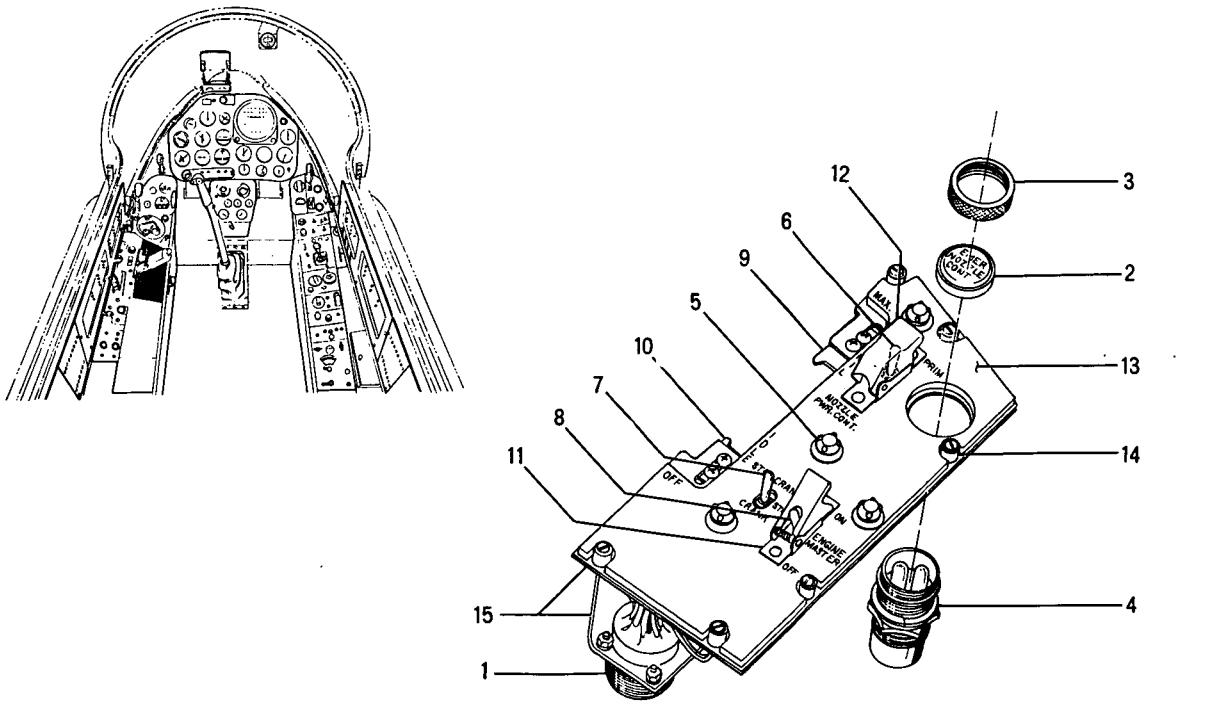

Figure 77 -- Engine Control Inboard Panel Assembly

FIGURE & INDEX NUMBER	PART NUMBER	1 2 3 4 5 6 7 DESCRIPTION	UNITS PER ASS'Y	USABLE ON CODE
77 -	25-81007-303	PANEL ASSEMBLY, ENGINE CONTROL INBOARD, SEE FIG. 74-23 FOR NEXT HIGHER ASSEMBLY	REF	
	25-81007- 37	• BUNDLE ASSEMBLY, WIRE	1	
- 1	AN3102-28-15P	• • RECEPTACLE	1	
- 2	36XP13-11	• CAP ASSEMBLY (DLC)	1	
- 3	36XP13-50	• RING, COUPLING (DLC)	1	
- 4	36410XP13-313	• BODY ASSEMBLY (DLC)	1	
- 5	A5374-327	• LIGHT ASSEMBLY (GMC)	4	
- 6	AN3027-3	• SWITCH, NOZZLE POWER CONTROL	1	
- 7	71000-2	• SWITCH, STARTER (ESSX)	1	
		ATTACHING PARTS		
	AN507-632R7	• SCREW	2	
	AN960D6	• WASHER	2	
		¤----¤-¤-¤----¤		
- 8	AN3227-3	• SWITCH, ENGINE MASTER	1	
		ATTACHING PARTS		
	AN507-632R7	• SCREW	2	
		¤----¤-¤-¤----¤		
- 9	25-81062- 1	• STOP ASSEMBLY, ENGINE THROTTLE LH	1	
- 10	25-81062- 2	• STOP ASSEMBLY, ENGINE THROTTLE RH	1	
	25-81007- 35	• PANEL ASSEMBLY, LIGHTING	1	
- 11	AN3229-1	• • GUARD, SWITCH	1	
- 12	AN3028-3	• • GUARD, SWITCH	1	
- 13	25-81007- 41	• • PANEL, PLASTIC	1	
	25-81007- 33	• PANEL ASSY, STRUCT	1	
- 14	PF3-1/2-38	• • STUD (DZ)	6	
	PS3-1/2	• • SPRING (DZ) USE WITH INDEX 14	6	
	PC3-1/2	• • CUP (DZ) USE WITH INDEX 14	6	
- 15	25-81007- 39	• • PANEL, STRUCTURAL	1	

Forward Fuselage

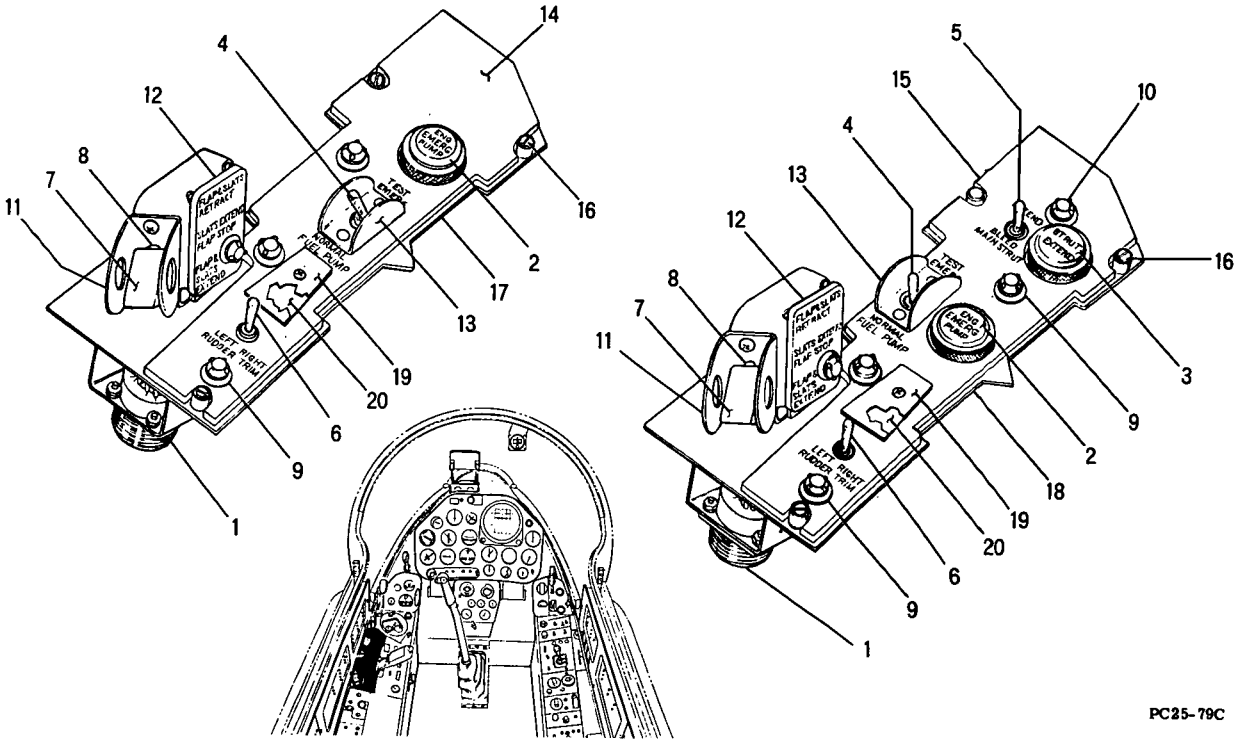

Figure 78 -- Engine Control Outboard Panel Assembly

FIGURE & INDEX NUMBER	PART NUMBER	1 2 3 4 5 6 7 DESCRIPTION	UNITS PER ASS'Y	USABLE ON CODE
78 -	25-81008- 1	PANEL ASSEMBLY, ENGINE CONTROL OUTBOARD, SEE FIG. 74-25 FOR NEXT HIGHER ASSEMBLY	REF	A-B
	25-81008-301	PANEL ASSEMBLY, ENGINE CONTROL OUTBOARD, SEE FIG. 74-25 FOR NEXT HIGHER ASSEMBLY	REF	C
	25-81008- 7	• RECEPTACLE ASSEMBLY	1	A-B
	25-81008- 39	• RECEPTACLE ASSEMBLY	1	C
- 1	AN3102-24-28P	• • RECEPTACLE	1	A-B
- 2	36410XP13-313	• BODY ASSEMBLY (DLC)	1	
	36XP13-8	• CAP ASSEMBLY (DLC) USE WITH INDEX 2	1	
	36XP13-50	• RING, COUPLING (DLC) USE WITH INDEX 2	1	
- 3	36410XP13-313	• BODY ASSEMBLY (DLC)	1	
	36XP13-41	• CAP ASSEMBLY (DLC) USE WITH INDEX 3	1	C
	36XP13-50	• RING, COUPLING (DLC) USE WITH INDEX 3	1	
- 4	AN3021-3	• SWITCH, FUEL PUMP	1	
- 5	AN3021-3	• SWITCH, MAIN STRUT BLEED	1	C
- 6	AN3021-7	• SWITCH, LEFT & RIGHT RUDDER TRIM	1	
- 7	23-80063- 1	• HANDLE ASSEMBLY, FLAP SWITCH	1	
	AN565B8H4	• • SCREW	2	
- 8	71000-1	• SWITCH (ESSX) FLAPS & SLATS	1	
- 9	A5374-327	• LIGHT ASSEMBLY (GMC)	4	
- 10	A5374-327	• LIGHT ASSEMBLY (GMC)	1	C
- 11	25-81008- 19	• GUARD, SWITCH	1	
- 12	25-81008- 21	• PANEL, PLASTIC	1	
	25-81008- 5	• PANEL ASSY, LIGHTING	1	A-B
	25-81008- 33	• PANEL ASSY, LIGHTING	1	C
- 13	19-78181- 7	• • GUARD, CHANNEL TYPE SWITCH	1	
- 14	25-81008- 43	• • PANEL	1	A-B
- 15	25-81008- 41	• • PANEL	1	C
	25-81008- 3	• PANEL ASSY, STRUCT	1	A-B
	25-81008- 31	• PANEL ASSY, STRUCT	1	C
- 16	PF3-1/2-38	• • STUD (DZ)	4	
	PS3-1/2	• • SPRING (DZ) USE WITH INDEX 16	4	
	PC3-1/2	• • CUP (DZ) USE WITH INDEX 16	4	
- 17	25-81008- 27	• • PANEL	1	A-B
- 18	25-81008- 35	• • PANEL	1	C
- 19	25-81008- 49	• COVER	1	
- 20	25-81008- 51	• PAD	1	

Forward Fuselage

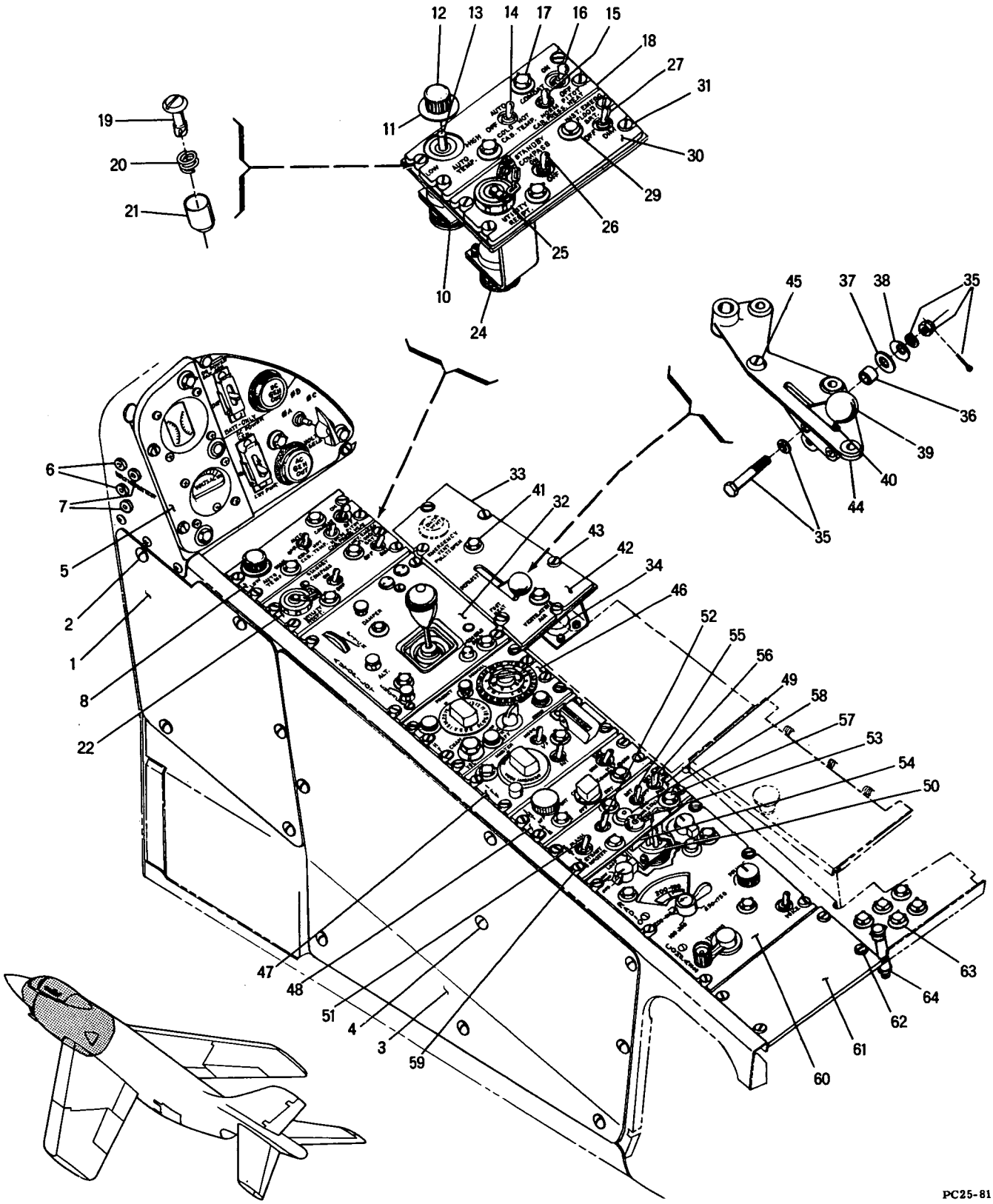

Figure 79 -- Right Hand Console Equipment Installation (Sheet 1 of 2)

Forward Fuselage

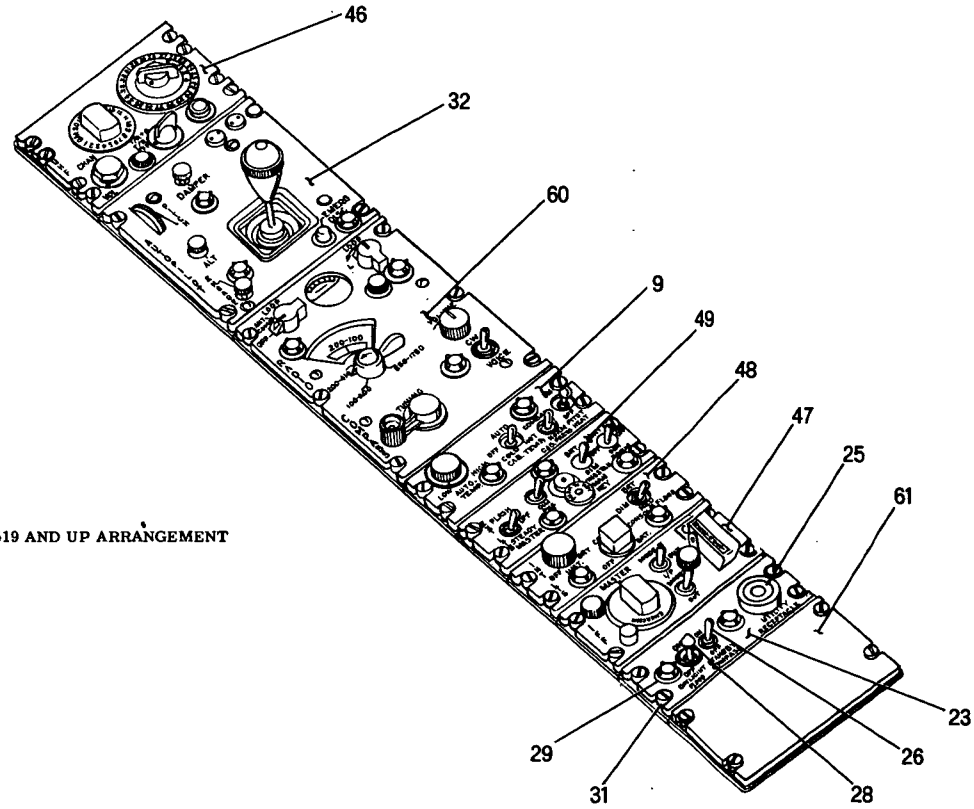

SERIAL NO. 133519 AND UP ARRANGEMENT

PC25-81

Figure 79 -- Right Hand Console Equipment Installation (Sheet 2 of 2)

FIGURE & INDEX NUMBER	PART NUMBER	1 2 3 4 5 6 7 DESCRIPTION	UNITS PER ASS'Y	USABLE ON CODE
79 -	25-80002- 1	EQUIPMENT INSTALLATION, RIGHT HAND CONSOLE, SEE FIG. 73-9 FOR NEXT HIGHER ASSEMBLY	REF	A-B
	25-80002-301	EQUIPMENT INSTALLATION, RIGHT HAND CONSOLE, SEE FIG. 73-9 FOR NEXT HIGHER ASSEMBLY	REF	C-F
- 1	25-81010- 1	. COVER ASSEMBLY, RH CONSOLE FORWARD SIDE	1	
- 2	98292-1-.120	. . STUD (MKL) USE WITH 99833P.130 RECEPTACLE (MKL)	5	
	99836	. . PIN, CROSS (MKL)	5	
- 3	25-81012- 1	. COVER ASSEMBLY, RH CONSOLE CENTER SIDE	1	
- 4	98292-1-.120	. . STUD (MKL) USE WITH 99833P.130 RECEPTACLE (MKL)	9	
	99836	. . PIN, CROSS (MKL)	9	
- 5	25-81013- 1	. PANEL ASSEMBLY, RH CONSOLE SUB INSTRUMENT, SEE FIG. 80	1	
- 6	AN3249-1	. JACK, RED TIP VOLTMETER TEST	2	
- 7	AN3249-2	. JACK, BLACK TIP VOLTMETER TEST	2	
- 8	25-81015- 1	. PANEL ASSEMBLY, HEAT & VENT.	1	A-B
- 9	25-81015-301	. PANEL ASSEMBLY, HEAT & VENT.	1	C-F
	25-81015- 5	. . WIRE ASSEMBLY	1	
- 10	AN3102-20-33P	. . . RECEPTACLE	1	
	23-81098- 1	. . KNOB ASSEMBLY, ROUND CONTROL	1	
- 11	23-81078- 3	. . . DISC, ROUND CONTROL KNOB LIGHTING	1	
		ATTACHING PARTS		
	3M14-4-4	. . . SCREW (MDA)	2	
		¤----¤-¤-¤----¤		
	AN565D8H4	. . . SCREW	1	
- 12	19-60031- 3	. . . GRIP, ROUND CONTROL KNOB	1	
- 13	RA20A2FD502FK	. . POTENTIOMETER	1	
- 14	8749K11	. . SWITCH, CABIN TEMPERATURE(CUT)	1	

FIGURE & INDEX NUMBER	PART NUMBER	1 2 3 4 5 6 7 DESCRIPTION	UNITS PER ASS'Y	USABLE ON CODE
79 -		ATTACHING PARTS		
	AN507-632R6	• • SCREW	2	
		¤----¤-¤-¤-----¤		
- 15	AN3021-3	• • SWITCH, CABIN PRESSURE	1	
- 16	MS25003-10	• • CIRCUIT BREAKER	1	
		ATTACHING PARTS		
	AN507-632R7	• • SCREW	2	
	AN960D6	• • WASHER	2	
		¤----¤-¤-¤-----¤		
- 17	A5374-327	• • LIGHT ASSY (GMC)	2	
- 18	25-81015- 9	• • PANEL, PLASTIC LIGHTING	1	
	25-81015- 3	• • PANEL ASSY, STRUCT	1	A-B
	25-81015- 15	• • PANEL ASSY, STRUCT	1	C-F
- 19	PF3-1/2-38	• • • STUD (DZ)	4	
- 20	PS3-1/2	• • • SPRING (DZ)	4	
- 21	PC3-1/2	• • • CUP (DZ)	4	
	25-81015- 7	• • • PANEL, STRUCT	1	
- 22	25-81018- 1	• PANEL ASSEMBLY, UTILITY CONTROL	1	A-B
- 23	25-81028- 1	• PANEL ASSEMBLY, UTILITY CONTROL	1	C-F
	25-81018- 11	• • WIRE ASSEMBLY	1	A-B
	25-81028- 11	• • WIRE ASSEMBLY	1	C-F
- 24	AN3102-18-1P	• • • RECEPTACLE	1	
- 25	NAF1077-13	• • RECEPTACLE ASSY	1	
- 26	AN3021-2	• • SWITCH, STAND-BY COMPASS	1	
- 27	AN3021-1	• • SWITCH, INSTRUMENT EMERGENCY FLOOD	1	A-B
- 28	8271K3	• • SWITCH (CUT) DAYLIGHT FLOOD	1	C-F
- 29	A5374-327	• • LIGHT ASSY (GMC)	2	
- 30	25-81018- 5	• • PANEL, PLASTIC LIGHTING	1	A-B
	25-81028- 5	• • PANEL, PLASTIC LIGHTING	1	C-F
	25-81018- 3	• • PANEL ASSY, STRUCT	1	A-B
	25-81028- 3	• • PANEL ASSY, STRUCT	1	C-F
- 31	PF3-1/2-38	• • • STUD (DZ)	4	
	PS3-1/2	• • • SPRING (DZ) USE WITH INDEX 31	4	
	PC3-1/2	• • • CUP (DZ) USE WITH INDEX 31	4	
	25-81018- 7	• • • PANEL, STRUCT	1	A-B
	25-81028- 7	• • • PANEL, STRUCT	1	C-F
- 32	R88C1607-015	• CONTROLLER, STICK TYPE, GFP	1	
- 33	25-81011- 1	• PANEL ASSY, RH CONSOLE HEATING & VENT. CONTROL	1	
	25-81011- 5	• • WIRE ASSEMBLY	1	
- 34	AN3102-14S2P	• • • RECEPTACLE	1	
	25-81011- 13	• • HANDLE ASSEMBLY	1	
		ATTACHING PARTS		
- 35	AN4-12	• • BOLT	1	
	AN960D416	• • WASHER	2	
- 36	NAS74A4-005	• • BUSHING	1	
- 37	4M36-02014	• • WASHER (MDA)	1	
- 38	25-81055- 3	• • WASHER, HEATING & VENT. LEVER BELEVILLE SPRING	1	
	AN310-4	• • NUT	1	
	AN380-2-2	• • PIN, COTTER	1	
		¤----¤-¤-¤-----¤		
- 39	NAS121B125	• • • KNOB, CONTROL	1	
- 40	25-81060- 3	• • • HANDLE, SELECTOR VALVE CONTROL	1	
	25-81011- 3	• • PANEL ASSY, STRUCT	1	
- 41	A5374-327	• • • LIGHT ASSY (GMC)	2	
- 42	25-81011- 9	• • • PANEL, PLASTIC LIGHTING	1	
- 43	PF3-1/2-39	• • • STUD (DZ)	6	
	PS3-1/2	• • • SPRING (DZ) USE WITH INDEX 43	6	
	PC3-1/2	• • • CUP (DZ) USE WITH INDEX 43	6	
- 44	25-81054- 3	• • • SUPPORT, HEATING & VENT. MANUAL CONTROLS	1	
		ATTACHING PARTS		
- 45	AN509-10R11	• • • SCREW	4	
	AN960D10L	• • • WASHER	4	
	AN364-1032	• • • NUT	4	
		¤----¤-¤-¤-----¤		
	25-81011- 7	• • • PANEL, STRUCT	1	
- 46	C1015/ARC27A	• CONTROL, RADIO SET, 52A1C27-3 (BUA) GFP	1	
- 47	C629/APX6	• PANEL, IFF CONTROL, GFP	1	
- 48	1444	• PANEL, INTERIOR LIGHTS CONSOLE CONTROL (SEAE) MCDONNELL SPEC 25-76012-1	1	
- 49	25-81070- 1	• PANEL ASSEMBLY, EXTERIOR LIGHTS	1	A-B
	25-81070-301	• PANEL ASSEMBLY, EXTERIOR LIGHTS	1	C-F
	25-81070- 5	• • WIRE ASSEMBLY	1	A-B
	25-81070- 15	• • WIRE ASSEMBLY	1	C-F
- 50	AN3102-24-28P	• • • RECEPTACLE	1	A-B
	AN3102-24-28PW	• • • RECEPTACLE	1	C-F

FIGURE & INDEX NUMBER	PART NUMBER	1 2 3 4 5 6 7 DESCRIPTION	UNITS PER ASS'Y	USABLE ON CODE
79 - 51	AN3226-1	• • SWITCH, EXTERIOR LIGHTS MASTER	1	
		ATTACHING PARTS		
	AN507-632R5	• • SCREW	2	
		¤----¤-¤-¤----¤		
- 52	AN3021-1	• • SWITCH, FUSELAGE LIGHTS	1	
- 53	A4487	• • KNOB (GMC)	1	
- 54	A4581	• • SWITCH ASSEMBLY, MANUAL KEY (GMC)	1	
- 55	AN3027-1	• • SWITCH, WING & TAIL LIGHT	1	
- 56	AN3027-1	• • SWITCH, FORMATION LIGHTS	1	
	25-81067- 3	• • INSULATOR, EXTERIOR LIGHTS SWITCHES	1	
- 57	A5374-327	• • LIGHT ASSY (GMC)	3	
- 58	1630	• • LIGHT ASSY (WMAC)	1	
	25-81070- 9	• • PANEL, PLASTIC LIGHTING	1	
	25-81070- 3	• • PANEL ASSEMBLY	1	
- 59	PF3-1/2-38	• • • STUD (DZ)	4	
	PS3-1/2	• • • SPRING (DZ) USE WITH INDEX 59	4	
	PC3-1/2	• • • CUP (DZ) USE WITH INDEX 59	4	
	25-81070- 7	• • • PANEL, STRUCT	1	
- 60	C758A/ARN6	• CONTROL, RADIO COMPASS, GFP	1	
- 61	25-81020- 1	• PANEL ASSEMBLY, RH CONSOLE AFT FILLER	1	
- 62	PF3-1/2-38	• • STUD, (DZ)	4	
	PS3-1/2	• • SPRING (DZ) USE WITH INDEX 62	4	
	PC3-1/2	• • CUP (DZ) USE WITH INDEX 62	4	
	25-81020- 5	• • PANEL, STRUCTURAL	1	
- 63	A5374-327	• LIGHT ASSEMBLY (GMC)	5	
- 64	AN3178-1	• HOLDER, SPARE LAMP	1	
	AN3140-327	• LAMP, SPARE STORED IN AN3178-1 HOLDER	5	

Forward Fuselage

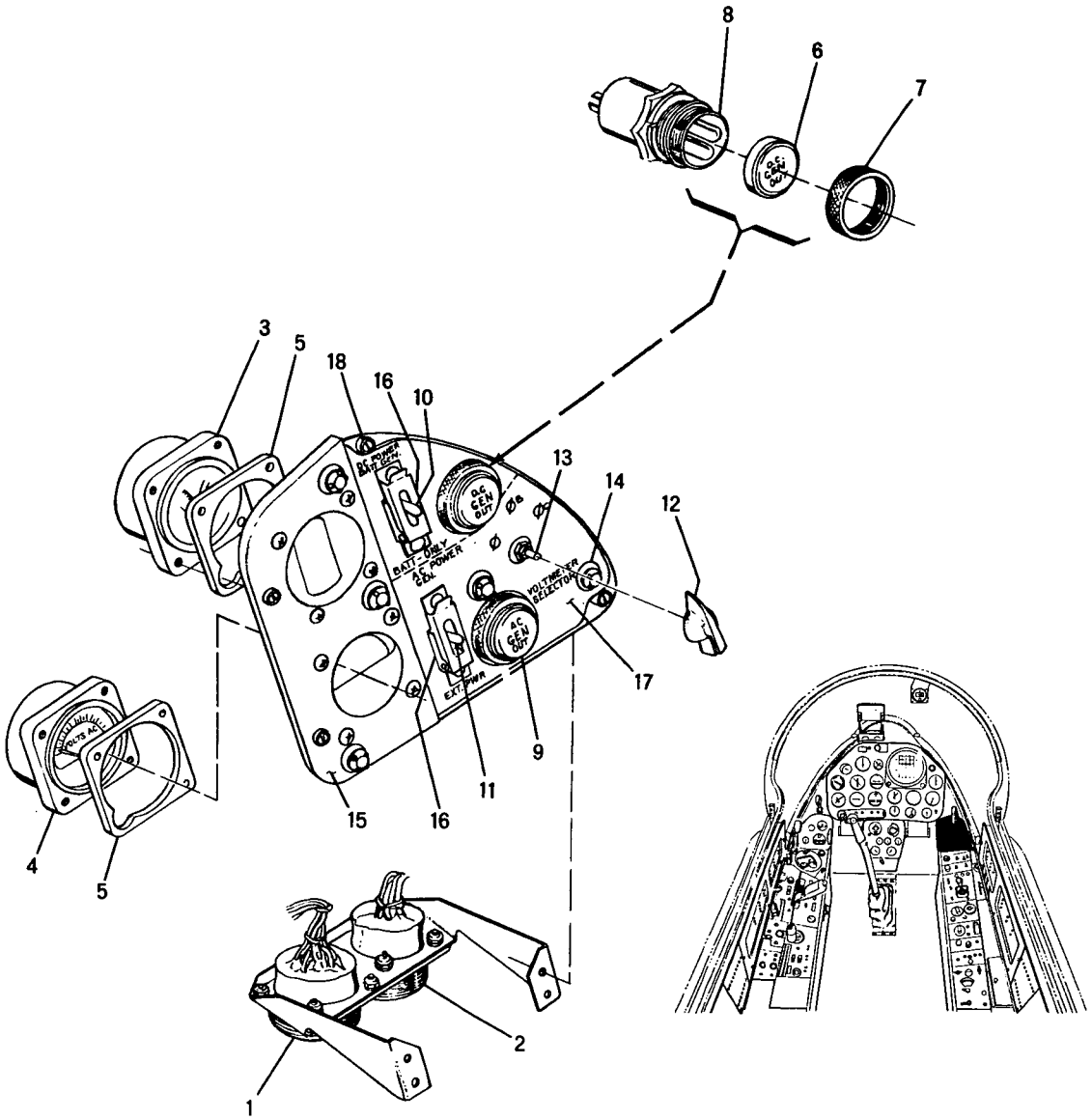

PC25-81A

Figure 80 -- Right Hand Console Sub-Instrument Panel Assembly

FIGURE & INDEX NUMBER	PART NUMBER	1 2 3 4 5 6 7 DESCRIPTION	UNITS PER ASS'Y	USABLE ON CODE
80 -	25-81013- 1	PANEL ASSEMBLY, RH CONSOLE SUB INSTRUMENT, SEE FIG. 79-5 FOR NEXT HIGHER ASSEMBLY	REF	
	25-81013- 7	. RECEPTACLE ASSY	1	
- 1	AN3102-24-28P	. . RECEPTACLE	1	
- 2	AN3102-20-7P	. . RECEPTACLE	1	
- 3	NAF1225-450	. VOLT, AMMETER, GFP	1	
		ATTACHING PARTS		
	AN515B6R18	. SCREW	4	
		¤----¤-¤-¤----¤		
- 4	25-60071- 3	. SPACER, INSTRUMENT SMALL	2	
- 5	AN3202-1	. VOLTMETER	1	
		ATTACHING PARTS		
	AN515B6R18	. SCREW	4	
		¤----¤-¤-¤----¤		
- 6	36410XP13-313	. BODY ASSEMBLY (DLC)	1	
- 7	36XP13-50	. RING, COUPLING (DLC)	1	
- 8	36XP13-6	. CAP (DLC)	1	
- 9	36410XP13-313	. BODY ASSEMBLY (DLC)	1	
	36XP13-50	. RING, COUPLING(DLC) USE WITH INDEX 9	1	
	36XP13-5	. CAP (DLC) USE WITH INDEX 9	1	
- 10	AN3226-1	. SWITCH, D-C POWER	1	
		ATTACHING PARTS		
	AN507-632R8	. SCREW	2	
		¤----¤-¤-¤----¤		
- 11	AN3226-1	. SWITCH, A-C POWER	1	
		ATTACHING PARTS		
	AN507-632R8	. SCREW	2	
		¤----¤-¤-¤----¤		
- 12	AN3220-3	. KNOB	1	
- 13	AN3211-1	. SWITCH, VOLTMETER CONTROL	1	
- 14	A5374-327	. LIGHT ASSY (GMC)	5	
- 15	25-81013- 13	. COVER	1	
	25-81013- 5	. PANEL ASSY, LIGHTING	1	
- 16	50A1A3	. . GUARD (BUA)	2	
- 17	25-81013- 11	. . PANEL, PLASTIC LIGHTING	1	
	25-81013- 3	. PANEL ASSY, STRUCT	1	
- 18	PF3-1/2-38	. . STUD (DZ)	4	
	PS3-1/2	. . SPRING (DZ) USE WITH INDEX 18	4	
	PC3-1/2	. . CUP (DZ) USE WITH INDEX 18	4	
	25-81013- 9	. . PANEL, STRUCTURAL	1	

Forward Fuselage

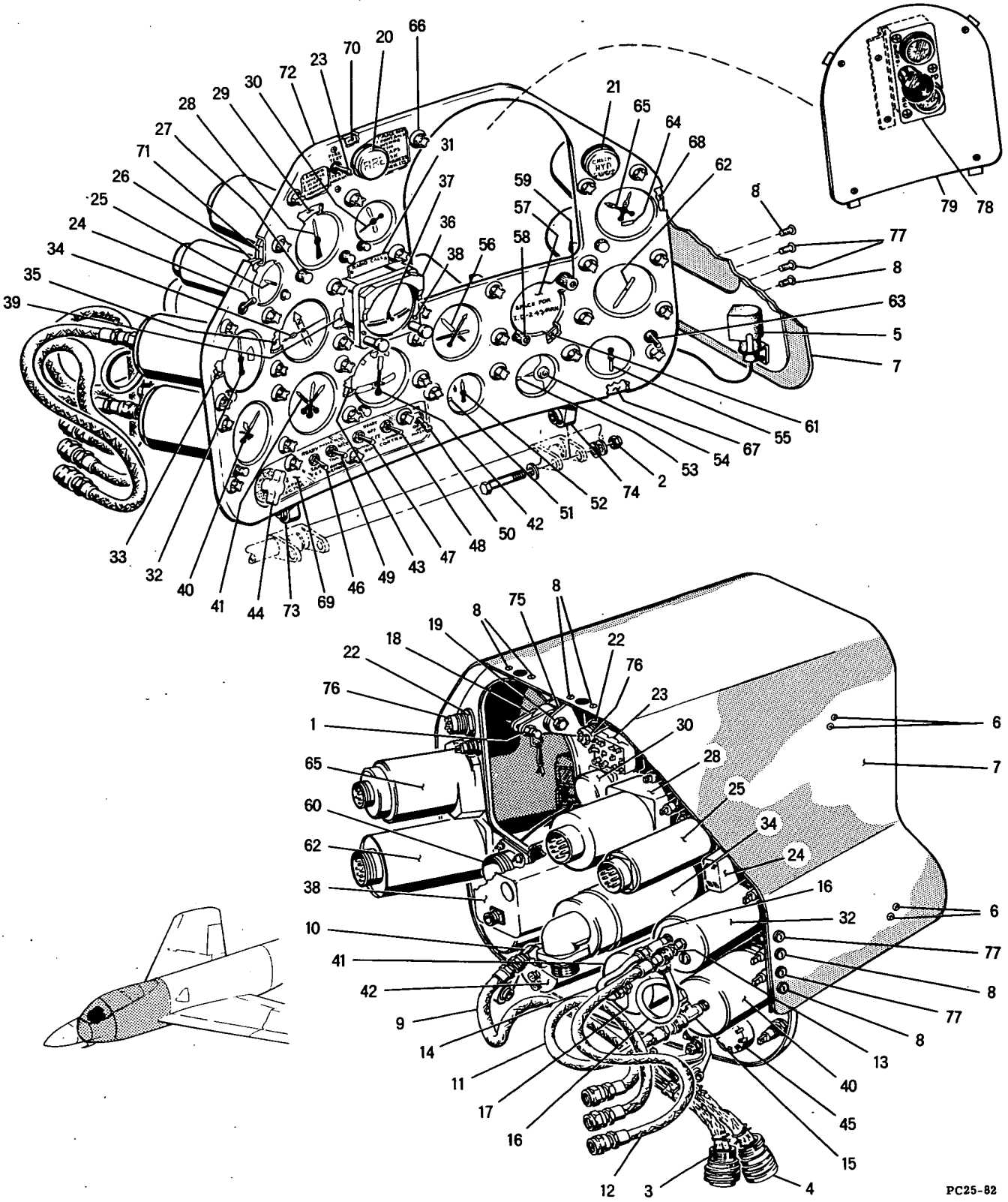

Figure 81 -- Main Instrument Panel Assembly

FIGURE & INDEX NUMBER	PART NUMBER	1 2 3 4 5 6 7 DESCRIPTION	UNITS PER ASS'Y	USABLE ON CODE
81 -	25-60000-303	PANEL ASSY, MAIN INSTRUMENT, SEE FIG. 73-49 FOR NEXT HIGHER ASSY	REF	A-B
	25-60000-305	PANEL ASSY, MAIN INSTRUMENT, SEE FIG. 73-49 FOR NEXT HIGHER ASSY	REF	C
		ATTACHING PARTS		
- 1	A409	PIN (AVDE)	1	
- 2	AN4-17A	BOLT	2	
	AN960D416	WASHER	6	
	AN364-428	NUT	2	
		¤----¤-¤-¤----¤		
	25-60000- 47	. WIRE ASSEMBLY	1	A-B
- 3	3106BS24-28P	. . PLUG (CED)	1	
- 4	3106BS28-15P	. . PLUG (CED)	1	
- 5	A5395	. FLOODLIGHT (GMC)	3	
		ATTACHING PARTS		
- 6	AN515-6R7	. SCREW	6	
	AN960D6	. WASHER	12	
	AN364-632	. NUT	6	
		¤----¤-¤-¤----¤		
- 7	25-60005- 1	. SHIELD ASSEMBLY, INSTRUMENT GLARE	1	
		ATTACHING PARTS		
- 8	AN526-632-5	. SCREW	8	
	AN960D6	. WASHER	8	
	AN364-632	. NUT	8	
		¤----¤-¤-¤----¤		
- 9	AN6270-4-22	. HOSE ASSEMBLY	1	
- 10	AN822-4D	. ELBOW	1	
- 11	AN6270-4-16	. HOSE ASSEMBLY	1	
- 12	AN6270-4-18	. HOSE ASSEMBLY	1	
- 13	AN816-4D	. NIPPLE	1	
- 14	25-60077- 7	. TUBE ASSEMBLY, COCKPIT STATIC	1	
- 15	AN826-4D	. TEE	2	
- 16	25-60077- 27	. TUBE ASSEMBLY, COCKPIT STATIC	1	
- 17	AN822-4D	. ELBOW	1	
- 18	25-60078- 1	. LINK ASSEMBLY, INSTRUMENT PANEL SUPPORT	1	
		ATTACHING PARTS		
- 19	AN4-15A	. BOLT	1	
	AN960D416L	. WASHER	1	
	AN960D416	. WASHER	1	
	AN364-428	. NUT	1	
		¤----¤-¤-¤----¤		
	H1002	. . MOUNTING, TUBE (LO)	1	
- 20	36XP13-1	. CAP ASSY (DLC)	1	
- 21	36XP13-13	. CAP ASSY (DLC)	1	
- 22	36XP13-50	. NUT, COUPLING (DLC)	2	
- 23	AN3227-7	. SWITCH, WARNING LIGHTS AND FIRE TEST	1	
		ATTACHING PARTS		
	AN515B6R12	. SCREW	2	
		¤----¤-¤-¤----¤		
- 24	AN3027-2	. SWITCH, COMPASS CONTROL	1	
- 25	SLZ2023A	. INDICATOR, ANGLE OF ATTACK (SLZ)	1	A-B
	45208	. INDICATOR, ANGLE OF ATTACK (AIR) MCDONNELL SPEC 25-60009-7	1	C-F
		ATTACHING PARTS		
	AN515B6R20	. SCREW, FURNISHED WITH INDICATOR	3	
	AN960D6L	. WASHER	3	
	AN365B632	. NUT	3	
		¤----¤-¤-¤----¤		
- 26	25-60071- 3	. SPACER, INST SMALL	1	
	25-60084- 1	. INDICATOR ASSEMBLY, RADIO ALTIMETER, GFP	1	
		ATTACHING PARTS		
	AN515B6R20	. SCREW, UPPER	2	
	AN515B6R18	. SCREW, LOWER	2	
	A6939-632-24A	. NUT,(TIN)	2	
		¤----¤-¤-¤----¤		
- 27	25-60085- 1	. . KNOB ASSEMBLY, ID257/APN22 INDICATOR	1	
		ATTACHING PARTS		
	AN565A4-3	. . SCREW	2	
		¤----¤-¤-¤----¤		
- 28	ID257/APN22	. . INDICATOR, RADIO ALTIMETER, GFP	1	
- 29	25-60074- 7	. SPACER, RADIO ALTIMETER	1	

FIGURE & INDEX NUMBER	PART NUMBER	1 2 3 4 5 6 7 DESCRIPTION	UNITS PER ASS'Y	USABLE ON CODE
81 - 30	R88C583-011	• CLOCK, AN5743L2, GFP	1	
		ATTACHING PARTS		
	AN515B6R20	• SCREW	2	
		¤----¤-¤-¤----¤		
	25-60071- 3	• SPACER, INSTRUMENT SMALL, USE WITH INDEX 30	1	
- 31	25-60075- 3	• NAMEPLATE, RADIO CALL	1	
- 32	R88I0474-100	• INDICATOR, AIR-SPEED AND MACH NUMBER, GFP	1	
		ATTACHING PARTS		
	AN515B6R20	• SCREW	3	
		¤----¤-¤-¤----¤		
- 33	25-60050- 5	• SPACER, INSTRUMENT LARGE CURVED	1	
- 34	ID250/ARN	• INDICATOR, COURSE, GFP	1	
		ATTACHING PARTS		
	AN515B6R20	• SCREW	4	
	A6939-632-24A	• NUT (TIN)	4	
		¤----¤-¤-¤----¤		
- 35	25-60050- 3	• SPACER, INSTRUMENT LARGE CURVED	1	
- 36	4790	• SHIELD, LIGHT (GMC)	1	
- 37	R88I1332-000	• INDICATOR ASSEMBLY, ATTITUDE, GFP	1	
		ATTACHING PARTS		
- 38	AN515B6R28	• SCREW	4	
	A8943-632-24A	• NUT (TIN)	4	
		¤----¤-¤-¤----¤		
- 39	25-60000- 57	• SUPPORT ASSEMBLY, ATTITUDE INDICATOR	1	
	25-60000- 61	• • SPACER	4	
- 40	R88A0351-011	• ALTIMETER, AN5760L4B, AN 05-30-26, -27, GFP	1	
		ATTACHING PARTS		
	AN515B6R24	• SCREW	3	
	A8941-632-24A	• NUT (TIN)	3	
		¤----¤-¤-¤----¤		
- 41	R88I0750-110	• INDICATOR, RATE OF CLIMB, AN5825-7, GFP	1	
		ATTACHING PARTS		
	AN515B6R24	• SCREW	3	
	A6939-632-24A	• NUT (TIN)	3	
		¤----¤-¤-¤----¤		
	25-60050- 5	• SPACER, INST LARGE, USE WITH INDEX 40 & 41	2	
- 42	R88I3250-025	• INDICATOR, TURN AND BANK, AN5820T2 MOD, AN 05-20HG-10, GFP	1	
		ATTACHING PARTS		
	AN515B6R24	• SCREW	2	
	AN515B6R20	• SCREW	2	
	A6939-632-24A	• NUT (TIN)	4	
		¤----¤-¤-¤----¤		
- 43	25-60060- 3	• SPACER, TURN AND BANK INDICATOR	1	
- 44	25-60097- 1	• KNOB ASSEMBLY, WEAPONS SELECTOR	1	A-B
	25-60091- 1	• KNOB ASSEMBLY, WEAPONS SELECTOR	1	C-F
		ATTACHING PARTS		
	AN565D8H4	• SCREW, SET	1	
		¤----¤-¤-¤----¤		
	25-60097- 5	• • DIAL	1	A-B
	25-60091- 3	• • DIAL	1	C-F
- 45	8918K663	• SWITCH (CUT) WEAPONS SELECTOR	1	A-B
	MS25002-6	• SWITCH, WEAPONS SELECTOR	1	C-F
- 46	AN3027-3	• SWITCH, BOMB RELEASE	1	
- 47	AN3027-3	• SWITCH, UPPER GUN CONTROL	1	
- 48	AN3027-3	• SWITCH, LOWER GUN CONTROL	1	
- 49	AN3027-1	• SWITCH, BOMB ARMING	1	
- 50	MS25003-5	• CIRCUIT BREAKER, SWITCH TYPE, ARMAMENT MASTER	1	
		ATTACHING PARTS		
	AN515B6R10	• SCREW, UPPER	1	
	AN507B632R5	• SCREW, LOWER	1	
		¤----¤-¤-¤----¤		
	25-60079- 1	• INDICATOR, RANGE MARKING TACHOMETER	1	
		ATTACHING PARTS		
	AN515B6R20	• SCREW	4	
	A6939-632-24A	• NUT (TIN)	4	
		¤----¤-¤-¤----¤		
- 51	R88M80	• • MARKER, RANGE RED, GFP	1	
- 52	R88I2600-000	• • INDICATOR, TACHOMETER, 50A45A1 (BUA) GFP	1	

FIGURE & INDEX NUMBER	PART NUMBER	1 2 3 4 5 6 7 DESCRIPTION	UNITS PER ASS'Y	USABLE ON CODE
81 -	25-60080- 1	• INDICATOR, RANGE MARKING TURBINE OUTLET TEMP	1	
		ATTACHING PARTS		
	AN515B6R20	• SCREW	4	
	A6939-632-24A	• NUT (TIN)	4	
		¤----¤-¤-¤----¤		
- 53	R88M80	• • MARKER, RANGE RED, GFP	1	
- 54	R88I2675-025	• • INDICATOR, EXHAUST TEMPERATURE, MS28006-1, GFP	1	
- 55	R88I0625-000	• INDICATOR, CABIN PRESSURE ALTITUDE, AN 05-20LA-7, GFP	1	
		ATTACHING PARTS		
	AN515B6R18	• SCREW	4	
	A8940-632-24A	• NUT (TIN)	4	
		¤----¤-¤-¤----¤		
	25-60071- 3	• SPACER, INST SMALL, USE WITH INDEX 52, 54 & 55	3	
- 56	R88A0140-015	• ACCELEROMETER, AN5745L3, AN 05-20KA-3 GFP	1	
		ATTACHING PARTS		
	AN515B6R18	• SCREW	3	
		¤----¤-¤-¤----¤		
	25-60050- 5	• SPACER, INSTRUMENT LARGE, USE WITH INDEX 56	1	
- 57	25-60094- 13	• COVER ASSEMBLY, INST	1	
		ATTACHING PARTS		
	AN515B6R14	• SCREW	2	
	AN365B632	• NUT	2	
		¤----¤-¤-¤----¤		
- 58	25-60094- 9	• • KNOB	1	
		ATTACHING PARTS		
	AN515B6R16	• • SCREW	1	
	AN960D6L	• • WASHER	2	
	AN364-632	• • NUT	1	
		¤----¤-¤-¤----¤		
- 59	25-60094- 11	• • KNOB	1	
		ATTACHING PARTS		
	AN515B6R16	• • SCREW	1	
	AN960D6L	• • WASHER	2	
	AN364-632	• • NUT	1	
		¤----¤-¤-¤----¤		
- 60	2182-10	• • RECEPTACLE (CED)	1	
		ATTACHING PARTS		
	AN515B6R6	• • SCREW	4	
	AN960D6L	• • WASHER	4	
	AN364-632	• • NUT	4	
		¤----¤-¤-¤----¤		
	25-60094- 15	• • COVER	1	
- 61	25-60052- 3	• SPACER, INSTRUMENT	1	
- 62	162-093-321	• INDICATOR, FUEL QTY (AVEN) MCDONNELL SPEC 25-58084-15	1	
		ATTACHING PARTS		
	AN515B6R20	• SCREW	4	
	A6939-632-24A	• NUT (TIN)	4	
		¤----¤-¤-¤----¤		
	25-60050- 3	• SPACER, INSTRUMENT SMALL, USE WITH INDEX 62	1	
- 63	AN3021-7	• SWITCH, FUEL QUANITY SELECTOR	1	
	25-60110- 1	• METER ASSY, FUEL FLOW	1	
		ATTACHING PARTS		
	AN515B6R20	• SCREW	3	
	A6939-632-24A	• NUT (TIN)	3	
		¤----¤-¤-¤----¤		
- 64	25-60110- 3	• • MASK	1	
- 65	R88I1208-000	• • INDICATOR ASSY, FUEL FLOWMETER, 50A30B1 (BUA) AN 05-55B-72, GFP	1	
	25-60050- 5	• SPACER, INSTRUMENT SMALL, USE WITH INDEX 65	1	
- 66	A5374-327	• LIGHT ASSEMBLY (GMC)	35	
- 67	25-60000- 33	• PANEL, LIGHTING	1	
- 68	25-60000- 55	• PANEL, LIGHTING	1	
- 69	25-60000- 39	• PANEL, ARMAMENT LIGHTING	1	
- 70	25-60000- 41	• PANEL, LIGHTING	1	
- 71	25-60000- 53	• PANEL, LIGHTING	1	
- 72	25-60000- 51	• SHIELD	1	
	25-60000- 45	• STRUCTURE, PANEL ASSY	1	

FIGURE & INDEX NUMBER	PART NUMBER	1 2 3 4 5 6 7 DESCRIPTION	UNITS PER ASS'Y	USABLE ON CODE
81 - 73	25-60072- 1	• • SUPPORT ASSEMBLY, MAIN INSTRUMENT PANEL LH	1	
- 74	25-60072- 2	• • SUPPORT ASSEMBLY, MAIN INSTRUMENT PANEL RH	1	
		ATTACHING PARTS		
	AN509P10R13	• • SCREW	4	
	AN960D10	• • WASHER	4	
	AN364B1032	• • NUT	4	
		¤----¤-¤-¤----¤		
	H1002	• • • MOUNTING (LO)	1	
- 75	25-60076- 3	• • SUPPORT, MAIN INSTRUMENT PANEL UPPER	1	
		ATTACHING PARTS		
	AN509P10R11	• • SCREW	2	
	AN960D10	• • WASHER	2	
	AN960D10L	• • WASHER	2	
	AN935-10	• • WASHER	1	
	AN345-10	• • NUT	1	
	AN364B1032	• • NUT	2	
		¤----¤-¤-¤----¤		
- 76	36410XP13-313	• • BODY ASSEMBLY (DLC)	2	
	25-60000- 49	• • STRUCTURE, PANEL	1	
- 77	AN526-832-8	• • SCREW	4	
	AN340-8	• • NUT	4	
	AN960D8L	• • WASHER	4	
	AN364-832	• • NUT	4	
- 78	ID295/APG30	• INDICATOR, RANGE, GFP	1	
		ATTACHING PARTS		
	AN515-8R6	• SCREW	4	
	AN960D8L	• WASHER	4	
	AN364-832	• NUT	4	
		¤----¤-¤-¤----¤		
- 79	25-87106- 41	• ADAPTER ASSEMBLY, APQ50 RADAR COMPONENT	1	
		ATTACHING PARTS		
	AN515-8R14	• SCREW	4	
	AN960D8L	• WASHER	4	
	AN365-832	• NUT	4	
		¤----¤-¤-¤----¤		

FIGURE & INDEX NUMBER	PART NUMBER	1 2 3 4 5 6 7 DESCRIPTION	UNITS PER ASS'Y	USABLE ON CODE
82 -	25-60003- 1	PANEL ASSY, SUB INSTRUMENT, SEE FIG. 73-50 FOR NEXT HIGHER ASSY	REF	
		ATTACHING PARTS		
- 1	NAS229-12	SCREW	2	
	AN960D10	WASHER	4	
	AN364-1032	NUT	2	
- 2	NAS229-31	SCREW	2	
	AN960D10	WASHER	4	
	AN364-1032	NUT	2	
- 3	25-60069- 3	WASHER, SUB INSTRUMENT PANEL SUPPORT	4	
- 4	NAS43DD3-66	SPACER	2	
		¤----¤-¤-¤----¤		
	25-60003- 11	. WIRE ASSEMBLY	1	
- 5	AN3102-16S1P	. . RECEPTACLE	1	
- 6	R88I1651-035	. INDICATOR, G-2 COMPASS, NAF1241-2, GFP	1	
		ATTACHING PARTS		
- 7	AN515B6R24	. SCREW	3	
	A8941-632-24A	. NUT (TIN)	3	
		¤----¤-¤-¤----¤		
- 8	25-60070- 5	. SPACER, INSTRUMENT LARGE FLAT	1	
- 9	25-60095- 1	. SELECTOR ASSEMBLY, STATION	1	
		ATTACHING PARTS		
- 10	AN515B6R16	. SCREW	4	
	AN960D8	. WASHER	4	
	A8940-632-24A	. NUT (TIN)	4	
		¤----¤-¤-¤----¤		
- 11	25-60099- 1	. . KNOB ASSEMBLY, STATION SELECTOR	1	
		ATTACHING PARTS		
- 12	AN565D8H6	. . SCREW, SET	1	
		¤----¤-¤-¤----¤		
- 13	25-60098- 3	. . . GRIP, STATION SELECTOR	1	
		ATTACHING PARTS		
- 14	3M14-4-4	. . . SCREW (MDA)	2	
		¤----¤-¤-¤----¤		
- 15	25-60099- 3	. . . DIAL	1	
- 16	52-028-125-1000	. . . PIN, ROLL (EN)	1	
	15-60507- 1	. . ADAPTER ASSEMBLY, SHAFT EXTENSION SWITCH	1	
- 17	AN565A8H3	. . . SCREW, SET	2	
- 18	15-60507- 3	. . . ADAPTER	1	
	25-89017- 27	. . NAMEPLATE, EQUIPMENT STATION SELECTOR	1	
- 19	25-60095- 3	. . SELECTOR, STATION, ALTERED FROM MK 2 MOD 2 WITH DIAL FOR EIGHT POSITIONS, GFP ALTERNATE MK 2 MOD 0 WITH DIAL FOR EIGHT POSITIONS, GFP	1	
- 20	25-60070- 3	. SPACER, INSTRUMENT LARGE FLAT	1	
	25-60087- 1	. INDICATOR, RANGE MARKING OIL PRESSURE	1	
		ATTACHING PARTS		
	AN515B6R16	. SCREW	2	
	A8943-632-24A	. NUT, CAGE (TIN)	2	
		¤----¤-¤-¤----¤		
- 21	R88M108	. . MARKER, RANGE, GFP	1	
- 22	R88M80	. . MARKER, RANGE, GFP	1	
- 23	R88I1937-025	. . INDICATOR, OIL PRESSURE, GFP	1	
- 24	25-60068- 3	. FLANGE, INST MIDGET	6	
- 25	R88I1937-010	. INDICATOR, AFTERBURNER FUEL PRESSURE, GFP	1	
		ATTACHING PARTS		
	AN515B6R16	. SCREW	2	
	A8943-632-24A	. NUT, CAGE (TIN)	2	
		¤----¤-¤-¤----¤		
	25-60089- 1	. INDICATOR, RANGE MARKING BOOST PUMP PRESSURE	1	
		ATTACHING PARTS		
	AN515B6R16	. SCREW	2	
	A8943-632-24A	. NUT, CAGE (TIN)	2	
		¤----¤-¤-¤----¤		
- 26	R88M117	. . MARKER, RANGE, GFP	1	
- 27	R88I1937-005	. . INDICATOR, BOOST PUMP PRESSURE, GFP	1	
- 28	6400A23A1A4	. INDICATOR, PNEUMATIC PRESSURE (ECP)	1	
		ATTACHING PARTS		
- 29	AN515B6R18	. SCREW	4	
	A6939-632-24A	. NUT (TIN)	4	
		¤----¤-¤-¤----¤		

Forward Fuselage

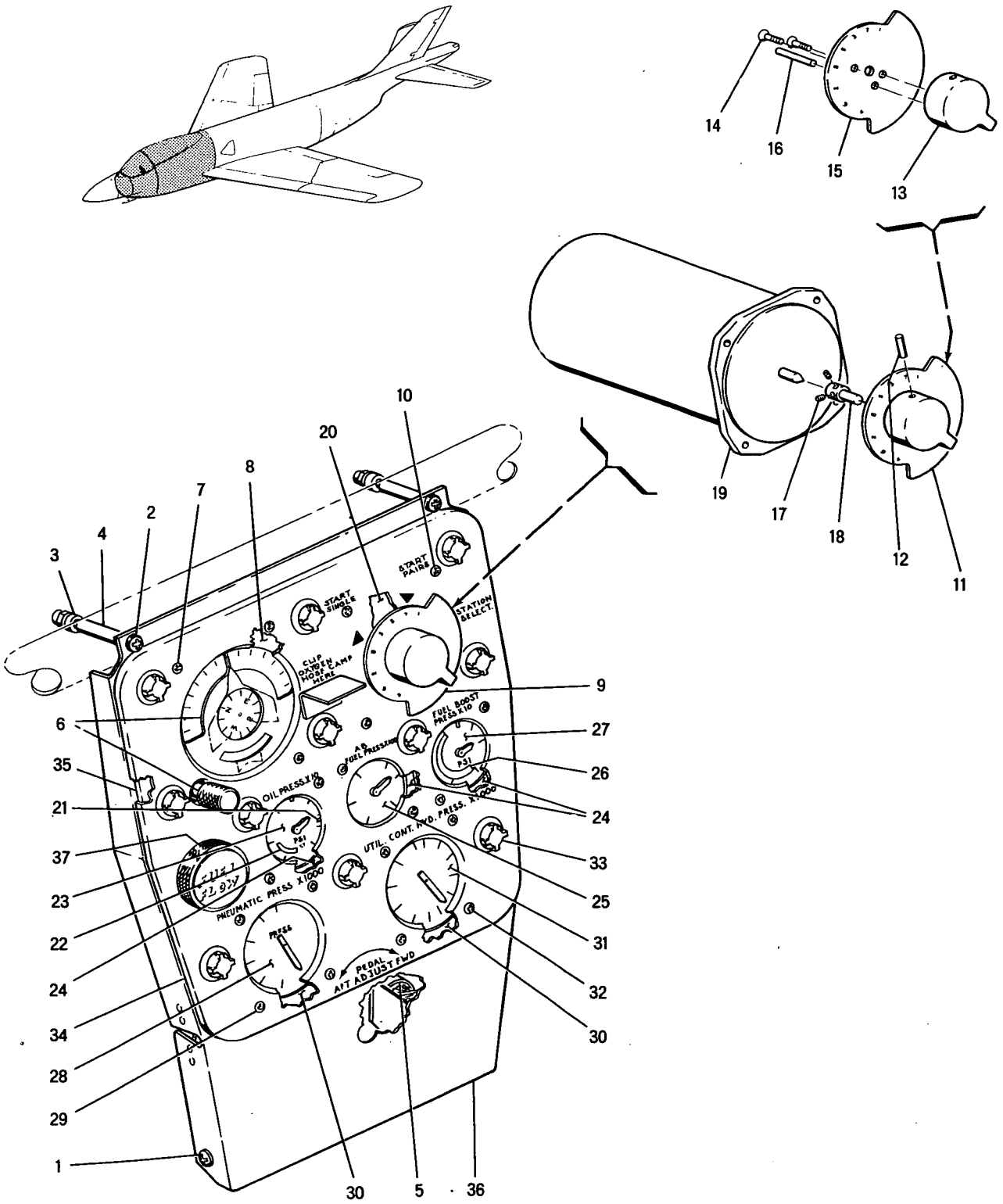

PC25-84

Figure 82 -- Sub-Instrument Panel Assembly

FIGURE & INDEX NUMBER	PART NUMBER	1 2 3 4 5 6 7 DESCRIPTION	UNITS PER ASS'Y	USABLE ON CODE
82 - 30	25-60071- 3	• SPACER, INST SMALL	2	
- 31	R8811931-000	• INDICATOR, HYDRAULIC PRESSURE, GFP	1	
		ATTACHING PARTS		
- 32	AN515B6R18	• SCREW	4	
	A6939-632-24A	• NUT (TIN)	4	
		¤----¤-¤-¤----¤		
- 33	A5374-327	• LIGHT ASSEMBLY (GMC)	11	
	25-60003- 19	• SHIELD ASSEMBLY	1	
- 34	25-60003- 31	• • SHIELD	1	
- 35	25-60003- 29	• PANEL, LIGHTING	1	
- 36	25-60003- 15	• PANEL ASSY, STRUCTURAL	1	
- 37	36410XF13-313	• BODY ASSEMBLY (DLC)	1	
	36XP13-3	• CAP (DLC) USE WITH INDEX 37	1	
	36XP13-50	• RING, COUPLING (DLC) USE WITH INDEX 37	1	

Forward Fuselage

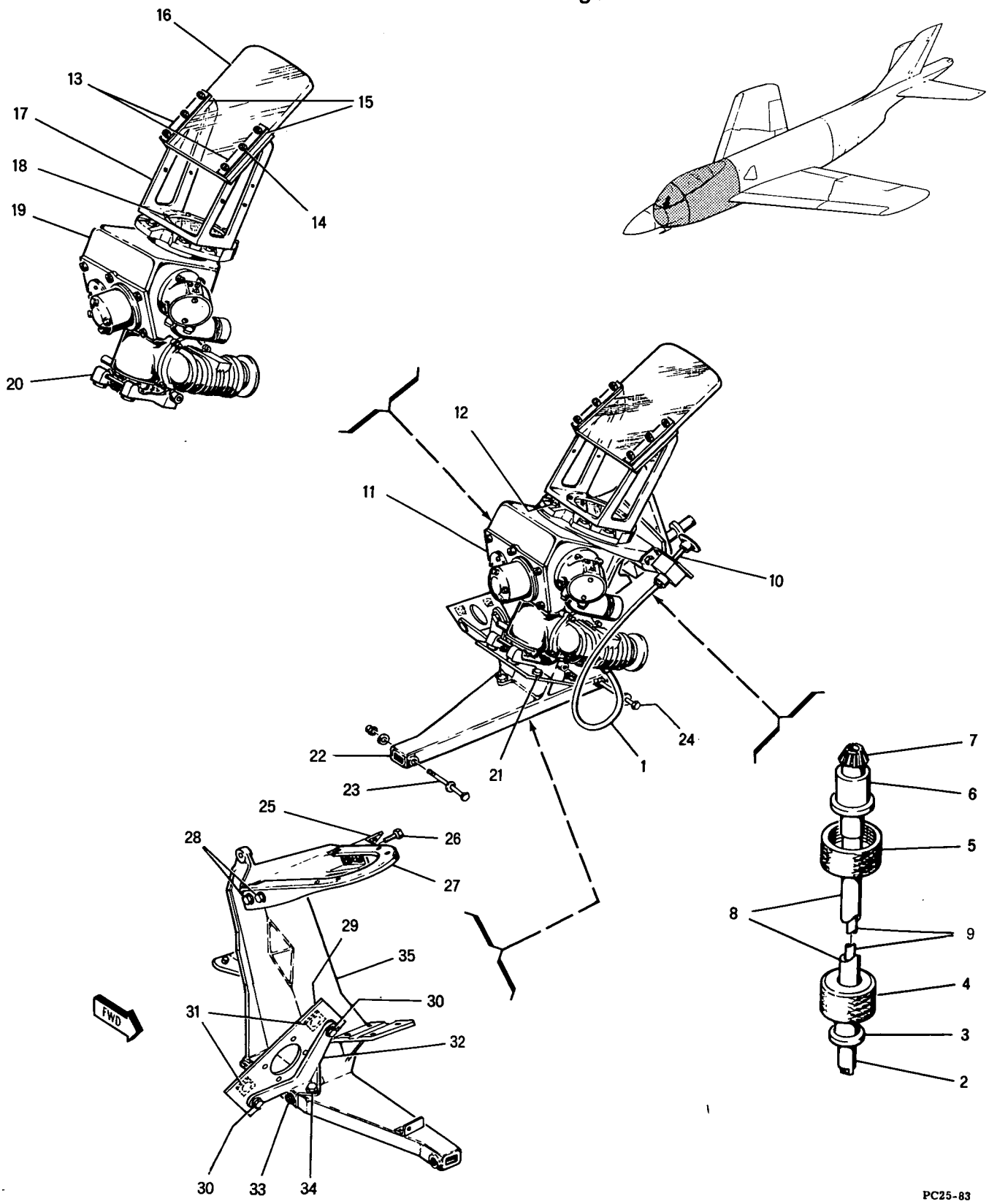

Figure 83 -- Radar and Gun Sight Installation

FIGURE & INDEX NUMBER	PART NUMBER	1 2 3 4 5 6 7 DESCRIPTION	UNITS PER ASS'Y	USABLE ON CODE
83 -	25-87002- 1	RADAR & GUN SIGHT INSTL, SEE FIG. 73-48 FOR NEXT HIGHER ASSY	REF	
- 1	25-60102- 1	. SHAFT ASSEMBLY, FIXED RETICULE IMAGE SELECTOR	1	
- 2	854972	. . FITTING, GFP	1	
- 3	854973	. . FITTING, GFP	1	
- 4	855811	. . NUT, GFP	1	
- 5	854976	. . NUT, GFP	1	
- 6	854977	. . FITTING, GFP	1	
- 7	854980	. . GEAR, GFP	1	
- 8	169A3	. . CASING, FLEX (WD) 29.00 INCHES LONG	1	
- 9	150L55	. . SHAFT, FLEX (WD) 30.00 IN. LONG	1	
- 10	BUO-875337	. CONTROL, RETICULE, GFP	1	
- 11	25-71012- 1	. GUN SIGHT ASSEMBLY, MK 11 MOD 1	1	
		ATTACHING PARTS		
- 12	AN4-10A	. BOLT	4	
	AN960D416	. WASHER	4	
		¤----¤-¤-¤----¤		
- 13	25-71088- 3	. . RETAINER, GUN SIGHT REFLECTOR GLASS	2	
		ATTACHING PARTS		
- 14	AN500A6-10	. . SCREW	6	
	AN960-6	. . WASHER	6	
	AN935-6	. . WASHER	6	
		¤----¤-¤-¤----¤		
- 15	25-71089- 3	. . GASKET, GUN SIGHT REFLECTOR GLASS	2	
- 16	25-71015- 3	. . GLASS, GUN SIGHT REFLECTOR	1	
- 17	25-71013- 1	. . SUPPORT ASSEMBLY, GUN SIGHT REFLECTOR	1	
		ATTACHING PARTS		
- 18	NO NUMBER	. . SCREW, FURNISHED WITH REFLECTOR PLATE BRACKET	REF	
	NO NUMBER	. . WASHER, FURNISHED WITH REFLECTOR PLATE BRACKET	REF	
	NO NUMBER	. . WASHER, FURNISHED WITH REFLECTOR PLATE BRACKET	REF	
		¤----¤-¤-¤----¤		
	1185-06CX9/32	. . . INSERT (AF)	6	
- 19	NO NUMBER	. . GUN SIGHT, MK 11 MOD 1, BUO-875334, GFP	1	
- 20	814024	. ADJUSTER, BORESIGHT ELEVATION, GFP	1	
		ATTACHING PARTS		
- 21	AN3-10A	. BOLT	4	
	AN960D10L	. WASHER	4	
	AN960D10	. WASHER	4	
	AN364-1032	. NUT	4	
		¤----¤-¤-¤----¤		
- 22	25-60012- 1	. SUPPORT ASSY, RADAR & GUN SIGHT	1	
		ATTACHING PARTS		
- 23	AN3-24A	. BOLT	1	
	AN960D10	. WASHER	2	
	AN364-1032	. NUT	1	
- 24	AN3-47A	. BOLT	1	
	AN960D10L	. WASHER	1	
	AN960D10	. WASHER	2	
	AN364-1032	. NUT	1	
		¤----¤-¤-¤----¤		
- 25	25-60101- 5	. . BRACKET, MASKING CONTROL	1	
		ATTACHING PARTS		
- 26	AN3-7A	. . BOLT	2	
	AN960D10	. . WASHER	4	
		¤----¤-¤-¤----¤		
- 27	25-71016- 1	. . COLLAR ASSY, GUN SIGHT SUPPORT	1	
		ATTACHING PARTS		
- 28	AN3-6A	. . BOLT	2	
	AN960D10	. . WASHER	4	
		¤----¤-¤-¤----¤		
- 29	25-87106- 9	. . ADAPTER ASSEMBLY, APQ50 RADAR COMPONENT	1	
		ATTACHING PARTS		
- 30	AN5-7A	. . BOLT	2	
	AN960D516L	. . WASHER	2	
	AN365-524	. . NUT	2	
		¤----¤-¤-¤----¤		

FIGURE & INDEX NUMBER	PART NUMBER	1 2 3 4 5 6 7 DESCRIPTION	UNITS PER ASS'Y	USABLE ON CODE
83 - 31	UG290/U	• • • RECEPTACLE	2	
		ATTACHING PARTS		
	AN520-3R8	• • • SCREW	8	
	AN935-3	• • • WASHER	8	
		¤----¤-¤-¤----¤		
- 32	25-87099- 3	• • SUPPORT, RADAR SCOPE FORWARD	1	
		ATTACHING PARTS		
- 33	AN509-10R9	• • SCREW	2	
- 34	AN3-16A	• • BOLT	2	
	AN960D10L	• • WASHER	2	
	AN960D10	• • WASHER	4	
	AN365-1032	• • NUT	2	
		¤----¤-¤-¤----¤		
- 35	25-71014- 1	• • SUPPORT ASSY, GUN SIGHT & RADAR SCOPE	1	
	RD205SB7L	• • • INSERT (ROSN)	2	
	RL24SB7	• • • RING, LOCK (ROSN)	2	

FIGURE & INDEX NUMBER	PART NUMBER	1 2 3 4 5 6 7 DESCRIPTION	UNITS PER ASS'Y	USABLE ON CODE
84 -	25-81084-303	COVER ASSY, CIRCUIT BREAKER LH, SEE FIG. 73-5 FOR NEXT HIGHER ASSEMBLY	REF	
	25-81084-304	COVER ASSY, CIRCUIT BREAKER RH, SEE FIG. 73-6 FOR NEXT HIGHER ASSEMBLY	REF	
- 1	R88C0195-000	. CARD, COMPASS CORRECTION, AN5823-1, RIGHT SIDE ONLY, GFP	2	
- 2	R88H0570-000	. HOLDER ASSY, CORRECTION CARD, AN5800-1, RIGHT SIDE ONLY, GFP	2	
- 3	25-81084- 5	. PANEL ASSEMBLY, LH	1	
- 4	25-81084- 6	. PANEL ASSEMBLY, RH	1	
- 5	98292-2-.230	. . STUD (MKL) USE WITH 99833P.130 RECP (MKL)	2	
	99836	. . PIN, CROSS (MKL)	2	
- 6	98292-2-.170	. . STUD (MKL) USE WITH 99833P.130 RECP (MKL)	3	
	99836	. . PIN, CROSS (MKL)	3	
	25-76050-307	PANEL ASSY, CIRCUIT BREAKER, SEE FIG. 73-7 FOR NEXT HIGHER ASSY	REF	A
	25-76050-309	PANEL ASSY, CIRCUIT BREAKER, SEE FIG. 73-7 FOR NEXT HIGHER ASSY	REF	B
	25-76084- 1	PANEL ASSY, CIRCUIT BREAKER LEFT SIDE, SEE FIG. 73-7 FOR NEXT HIGHER ASSY	REF	C
	25-76084-301	PANEL ASSY, CIRCUIT BREAKER LEFT SIDE, SEE FIG. 73-7 FOR NEXT HIGHER ASSY	REF	D-F
	25-76085- 1	PANEL ASSY, CIRCUIT BREAKER RIGHT SIDE, SEE FIG. 73-7 FOR NEXT HIGHER ASSY	REF	C-F
- 7	AN393-35	. PIN, FLAT HEAD	2	
	AN960D10	. WASHER	6	
	NAS43DD3-27	. SPACER	2	
	AN380-2-2	. PIN, COTTER	2	
- 8	AN393-73	. PIN, FLAT HEAD	2	
	AN960D10	. WASHER	8	
	NAS43DD3-23	. SPACER	2	
	AN380-2-2	. PIN, COTTER	2	
- 9	AN393-49	. PIN, FLAT HEAD	2	
	AN960D10	. WASHER	6	
	AN380-2-2	. PIN, COTTER	2	
	25-76050- 27	. PANEL ASSEMBLY, LEFT SIDE FORWARD	1	A-B
	25-76084- 3	. PANEL ASSEMBLY, LEFT SIDE FORWARD	1	C
	25-76084- 7	. PANEL ASSEMBLY, LEFT SIDE FORWARD	1	D-F
		ATTACHING PARTS		
- 10	AN509-10R8	. SCREW	2	
		¤----¤-¤-¤----¤		
- 11	5M9-032-2	. . BUS BAR (MDA)	1	
- 12	5M9-032-2	. . BUS BAR (MDA)	1	D-F
- 13	D6753-1	. . CIRCUIT BREAKER (SPTD)	3	
- 14	MS25005-5	. . CIRCUIT BREAKER	5	
- 15	MS25005-5	. . CIRCUIT BREAKER	1	A-C
- 16	MS25005-15	. . CIRCUIT BREAKER	1	
- 17	RW30GR80	. . RESISTOR	1	A-C
		ATTACHING PARTS		
- 18	AN3-14A	. . BOLT	1	A-C
	AN960D10L	. . WASHER	2	A-C
	6000	. . WASHER, CENTERING (OM)	2	A-C
	AN363-1032	. . NUT	1	A-C
		¤----¤-¤-¤----¤		
- 19	25-89067- 9	. . NAMEPLATE, LH CIRCUIT BREAKER PANEL	1	A-C
	25-89055- 3	. . NAMEPLATE, LH CIRCUIT BREAKER PANEL	1	D-F
- 20	25-76053-301	. . PANEL ASSEMBLY, CIRCUIT BREAKER SUPPORT FWD	1	
	25-76050- 29	. PANEL ASSEMBLY, LEFT SIDE AFT	1	A-B
	25-76084- 5	. PANEL ASSEMBLY, LEFT SIDE AFT	1	C
	25-76084- 9	. PANEL ASSEMBLY, LEFT SIDE AFT	1	D-F
		ATTACHING PARTS		
- 21	AN509-10R8	. SCREW	2	
		¤----¤-¤-¤----¤		
- 22	5M9-032-2	. . BUS BAR (MDA)	5	
- 23	5M9-032-2	. . BUS BAR (MDA)	1	D-F
- 24	25-76133- 1	. . GUARD ASSEMBLY, CIRCUIT BREAKER	1	C-F
		ATTACHING PARTS		
	AN515B6R8	. . SCREW	2	
		¤----¤-¤-¤----¤		
- 25	MS25005-5	. . CIRCUIT BREAKER	10	
- 26	MS25005-5	. . CIRCUIT BREAKER	1	C
- 27	MS25005-5	. . CIRCUIT BREAKER	1	D-F
- 28	MS25005-10	. . CIRCUIT BREAKER	1	
- 29	25-89067- 11	. . NAMEPLATE, LH CIRCUIT BREAKER PANEL	1	
	25-89067- 13	. . NAMEPLATE, LH CIRCUIT BREAKER PANEL	1	C
	25-89055- 5	. . NAMEPLATE, LH CIRCUIT BREAKER PANEL	1	D-F
- 30	25-76054- 1	. . PANEL ASSEMBLY, CIRCUIT BREAKER SUPPORT AFT	1	

Forward Fuselage

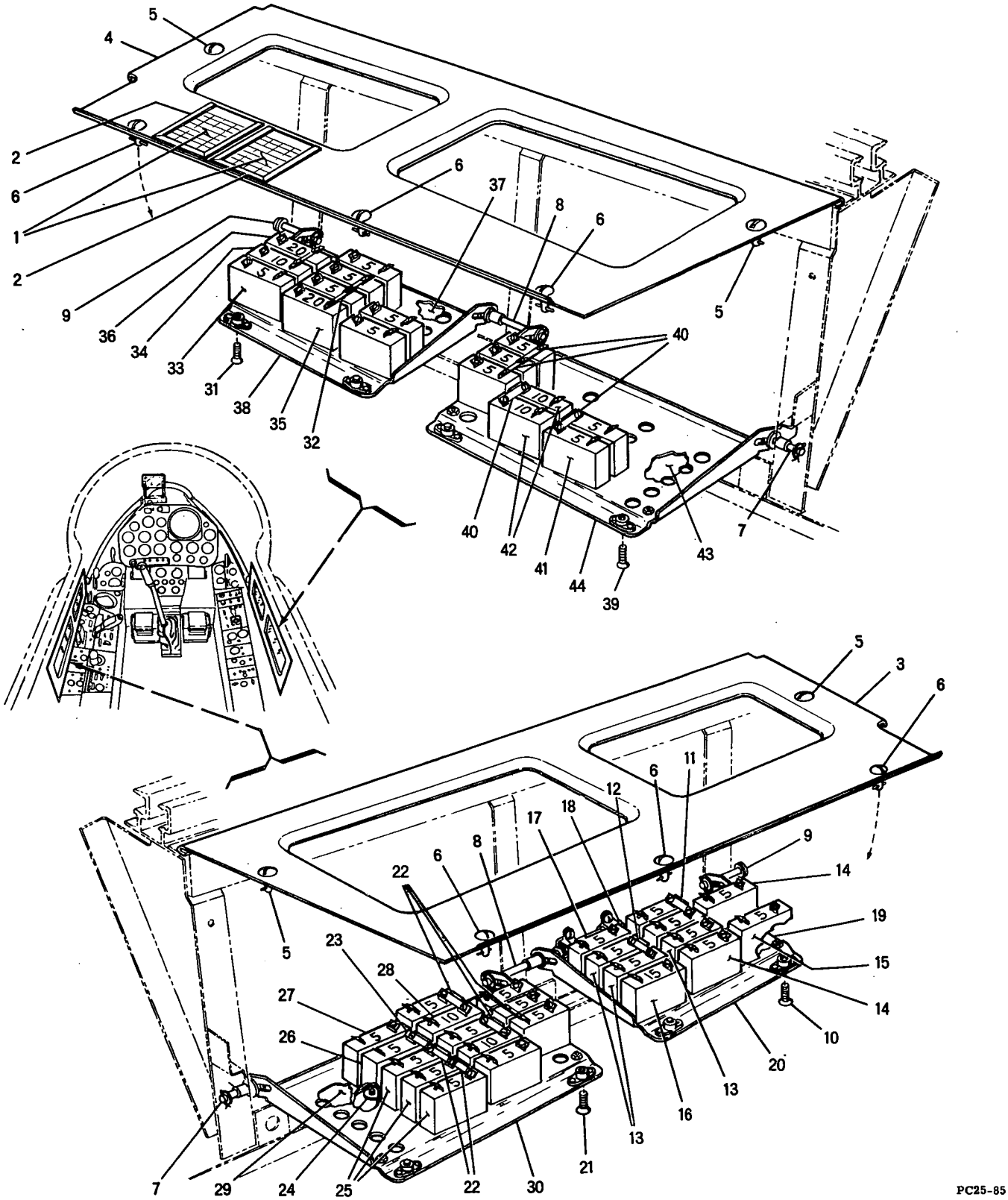

Figure 84 -- Circuit Breaker Panels and Cover Assemblies

FIGURE & INDEX NUMBER	PART NUMBER	1 2 3 4 5 6 7 DESCRIPTION	UNITS PER ASS'Y	USABLE ON CODE
84 -	25-76050- 17	• PANEL ASSEMBLY, RIGHT SIDE FORWARD	1	A
	25-76050- 33	• PANEL ASSEMBLY, RIGHT SIDE FORWARD	1	B
	25-76085- 3	• PANEL ASSEMBLY, RIGHT SIDE FORWARD	1	C-F
		ATTACHING PARTS		
- 31	AN509-10R8	• SCREW	2	
		¤----¤-¤-¤-----¤		
	32543	• • TERMINAL (ARP)	4	
- 32	5M9-032-2	• • BUS BAR (MDA)	3	
- 33	MS25005-5	• • CIRCUIT BREAKER	6	
- 34	MS25005-10	• • CIRCUIT BREAKER	1	
- 35	MS25005-20	• • CIRCUIT BREAKER	1	
- 36	MS25005-20	• • CIRCUIT BREAKER	1	A
	MS25005-25	• • CIRCUIT BREAKER	1	B-F
- 37	25-89068- 3	• • NAMEPLATE, RH CIRCUIT BREAKER PANEL	1	
- 38	25-76053-302	• • PANEL ASSEMBLY, CIRCUIT BREAKER SUPPORT FWD	1	
	25-76050- 31	• PANEL ASSEMBLY, RIGHT SIDE AFT	1	A-B
	25-76085- 5	• PANEL ASSEMBLY, RIGHT SIDE AFT	1	C-F
		ATTACHING PARTS		
- 39	AN509-10R8	• SCREW	2	
		¤----¤-¤-¤-----¤		
- 40	5M9-032-2	• • BUS BAR (MDA)	4	
- 41	MS25005-5	• • CIRCUIT BREAKER	5	
- 42	MS25005-10	• • CIRCUIT BREAKER	2	
- 43	25-89068- 7	• • NAMEPLATE, RH CIRCUIT BREAKER PANEL	1	
- 44	25-76054- 2	• • PANEL ASSEMBLY, CIRCUIT BREAKER SUPPORT AFT	1	

Forward Fuselage

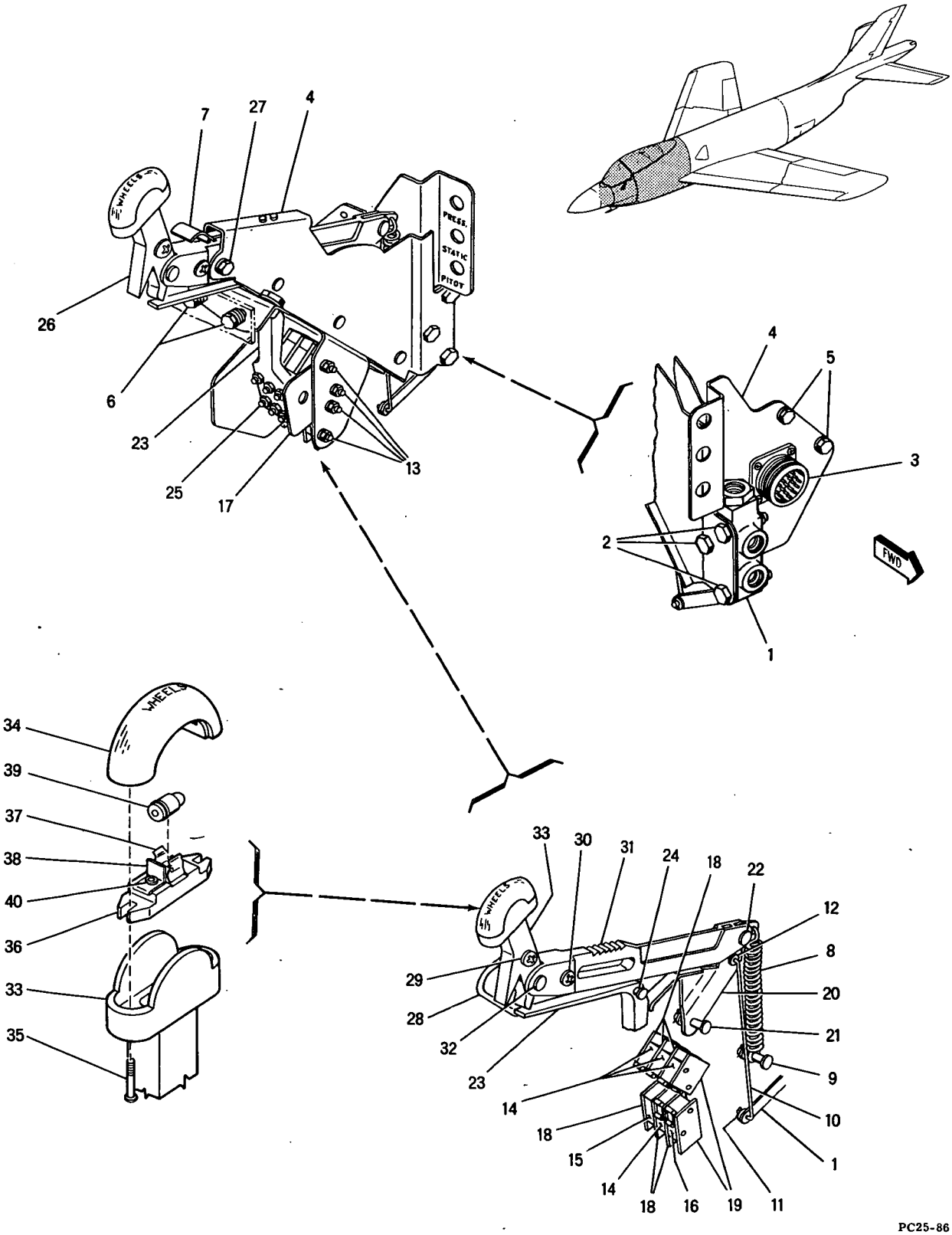

Figure 85 -- Landing Gear Control Installation

FIGURE & INDEX NUMBER	PART NUMBER	1 2 3 4 5 6 7 DESCRIPTION	UNITS PER ASS'Y	USABLE ON CODE
85 -	25-68006- 1	CONTROL INSTL, LANDING GEAR, SEE FIG. 73-27 FOR NEXT HIGHER ASSY	REF	A-B
	25-68006-301	CONTROL INSTL, LANDING GEAR, SEE FIG. 73-27 FOR NEXT HIGHER ASSY	REF	C-F
- 1	870447	• VALVE (WK)	1	
		ATTACHING PARTS		
- 2	AN3-15A	• BOLT	3	
	AN960D10L	• WASHER	3	
	AN960D10	• WASHER	6	
	AN364-1032	• NUT	3	
		¤----¤-¤-¤----¤		
- 3	AN3102-22-14P	• RECEPTACLE	1	
- 4	25-68054- 1	• BRACKET ASSEMBLY, LANDING GEAR CONTROL	1	
		ATTACHING PARTS		
- 5	AN3-5A	• BOLT	2	
	AN960D10	• WASHER	2	
- 6	AN3-6A	• BOLT	2	
	AN960D10L	• WASHER	2	
	AN960D10	• WASHER	4	
		¤----¤-¤-¤----¤		
- 7	25-68062- 3	• • SPRING, LG CONTROL EMERGENCY RATCHET	1	
- 8	25-68055- 3	• SPRING, LG CONTROL EMERGENCY EXTENSION	1	
		ATTACHING PARTS		
- 9	AN393-25	• PIN, FLAT HEAD	1	
	AN960D10	• WASHER	1	
	AN381-2-6	• PIN, COTTER	1	
		¤----¤-¤-¤----¤		
- 10	25-68056- 3	• ROD, LANDING GEAR EMERGENCY VALVE ACTUATING	1	
		ATTACHING PARTS		
- 11	AN960D6L	• WASHER	1	
	AN381-1-6	• PIN, COTTER	1	
- 12	AN960D6	• WASHER	2	
	AN381-1-6	• PIN, COTTER	1	
		¤----¤-¤-¤----¤		
- 13	25-68060- 3	• STUD, SWITCH RETAINER	4	
	AN960D4L	• WASHER	8	
	AN365-440	• NUT	8	
- 14	AN3234-1	• SWITCH, LG CONTROL	4	
	JV20	• ACTUATOR (MCS) USE WITH INDEX 14	4	
- 15	25-60103- 3	• SPACER, SWITCH	1	
	25-60103- 3	• SPACER, SWITCH	1	A-B
- 16	AN3234-1	• SWITCH, LG CONTROL	1	C-F
	JV20	• ACTUATOR (MCS) USE WITH INDEX 16	1	C-F
- 17	25-68066- 3	• INSULATOR, LANDING GEAR CONTROL	1	A-B
- 18	5M6-3	• INSULATOR (MDA)	6	
- 19	5M6-3	• INSULATOR (MDA)	2	C-F
- 20	25-68053- 3	• BELL CRANK, LANDING GEAR CONTROL SLIDE	1	
		ATTACHING PARTS		
- 21	AN393-25	• PIN, FLAT HEAD	1	
	NAS43-3-15	• SPACER	2	
	AN960D10	• WASHER	1	
	AN381-2-6	• PIN, COTTER	1	
- 22	AN393-15	• PIN, FLAT HEAD	1	
	AN960D10L	• WASHER	3	
	AN381-2-6	• PIN, COTTER	1	
		¤----¤-¤-¤----¤		
- 23	25-68059- 1	• LEVER, LANDING GEAR CONTROL SWITCH	1	
		ATTACHING PARTS		
- 24	AN393-25	• PIN, FLAT HEAD	1	
	AN960D10	• WASHER	1	
	AN381-2-6	• PIN, COTTER	1	
		¤----¤-¤-¤----¤		
	1191-3CNX9/32	• • INSERT (AF)	6	
- 25	NAS428K3-10	• SCREW	6	
	AN364-1032	• NUT, USE WITH INDEX 25	6	
- 26	25-68051- 1	• HANDLE ASSY, LANDING GEAR CONTROL	1	
		ATTACHING PARTS		
- 27	AN3-11A	• BOLT	1	
	AN960D10L	• WASHER	1	
	AN960D10	• WASHER	4	
	NAS73-3-007	• BUSHING	1	
	AN364-1032	• NUT	1	
		¤----¤-¤-¤----¤		

FIGURE & INDEX NUMBER	PART NUMBER	1 2 3 4 5 6 7 DESCRIPTION	UNITS PER ASS'Y	USABLE ON CODE
85 - 28	19-68105- 3	• • SPRING, LG CONTROL HANDLE OVERCENTER	1	
		ATTACHING PARTS		
- 29	NAS229-18	• • SCREW	1	
	AN960D10L	• • WASHER	1	
	NAS42DD6-21	• • SPACER	1	
	4M36-01016	• • WASHER (MDA)	1	
	AN364-1032	• • NUT	1	
- 30	NAS229-21	• • SCREW	1	
	AN960D10L	• • WASHER	1	
	NAS42DD6-13	• • SPACER	1	
	4M36-01016	• • WASHER (MDA)	2	
	AN364-1032	• • NUT	1	
		¤----¤-¤-¤----¤		
- 31	25-68057- 3	• • SLIDE, LANDING GEAR CONTROL	1	
		ATTACHING PARTS		
- 32	AN393-27	• • PIN, FLAT HEAD	1	
	AN960D10L	• • WASHER	2	
	AN960D10	• • WASHER	2	
	AN381-2-7	• • PIN, COTTER	1	
		¤----¤-¤-¤----¤		
- 33	25-68058- 3	• • HANDLE, LANDING GEAR CONTROL	1	
- 34	15-68142	• • LENS, LANDING GEAR CONTROL HANDLE	1	
		ATTACHING PARTS		
- 35	AN515-4R8	• • SCREW	2	
		¤----¤-¤-¤----¤		
- 36	15-68143	• • INSULATOR, LANDING GEAR CONTROL HANDLE	1	
- 37	15-68151	• • CLIP, LANDING GEAR CONTROL HANDLE BULB	1	
- 38	15-68148	• • CONTACT, LANDING GEAR, CONTROL HANDLE LIGHT	1	
- 39	AN3140-327	• • LAMP	1	
- 40	A1001	• • EYELET (STM)	2	

FIGURE & INDEX NUMBER	PART NUMBER	1 2 3 4 5 6 7 DESCRIPTION	UNITS PER ASS'Y	USABLE ON CODE
86 -	25-35051- 1	HANDLE ASSY, CANOPY EMERGENCY, SEE FIG. 73-13 FOR NEXT HIGHER ASSY	REF	
		ATTACHING PARTS		
- 1	AN4-10A	BOLT	2	
	AN960-416L	WASHER	2	
		¤----¤-¤-¤----¤		
- 2	25-35052- 3	• KNOB, CANOPY EMERGENCY HANDLE	1	
		ATTACHING PARTS		
- 3	AN507-832R8	• SCREW	1	
- 4	AN507-832R10	• SCREW	1	
		¤----¤-¤-¤----¤		
- 5	25-35053- 5	• LEVER, CANOPY EMERGENCY HANDLE	1	
		ATTACHING PARTS		
- 6	AN509-10R13	• SCREW	2	
	AN960D10	• WASHER	2	
	AN365-1032	• NUT	2	
		¤----¤-¤-¤----¤		
- 7	25-35055- 3	• HINGE, CANOPY EMERGENCY HANDLE	1	
		ATTACHING PARTS		
- 8	AN393-35	• PIN, FLAT HEAD	1	
	AN960D10	• WASHER	1	
	AN381-2-8	• PIN, COTTER	1	
		¤----¤-¤-¤----¤		
- 9	25-35099- 5	• STOP, CANOPY EMERGENCY HANDLE	1	
		ATTACHING PARTS		
- 10	AN253-5-110	• PIN, HINGE	1	
		¤----¤-¤-¤----¤		
- 11	25-35100- 3	• SPRING, CANOPY EMERGENCY HANDLE	1	
- 12	25-35081- 1	• MOUNTING ASSY, CANOPY EMERGENCY HANDLE	1	
	25-84030- 1	CONTROL ASSY, ARRESTING GEAR, SEE FIG. 73-39 FOR NEXT HIGHER ASSY	REF	
		ATTACHING PARTS		
- 13	AN3-5A	BOLT	2	
	AN960D10	WASHER	2	
- 14	AN3-6A	BOLT	4	
	AN960D10	WASHER	4	
		¤----¤-¤-¤----¤		
- 15	19-84100-301	• HANDLE ASSY, ARRESTING GEAR CONTROL	1	
		ATTACHING PARTS		
- 16	NAS230-24	• SCREW	1	
	AN960D416	• WASHER	2	
	NAS74A4-014	• BUSHING	1	
	AN364-428	• NUT	1	
- 17	AN393-13	• PIN, FLAT HEAD	1	
	AN960D10L	• WASHER	2	
	AN960D10	• WASHER	1	
	AN380-2-2	• PIN, COTTER	1	
		¤----¤-¤-¤----¤		
- 18	15-84111- 5	• • LENS, ARRESTING GEAR CONTROL HANDLE	1	
		ATTACHING PARTS		
- 19	NAS201-440BC6	• • SCREW	2	
		¤----¤-¤-¤----¤		
- 20	AN3140-327	• • LAMP	1	
- 21	NAS201-440BC12	• • SCREW	1	
- 22	AN960PD4	• • WASHER	1	
- 23	AN365-440	• • NUT	1	
- 24	19-84100- 5	• • WASHER	1	
- 25	31889	• • TERMINAL (ARP)	1	
- 26	15-84124	• • CONTACT, ARRESTING GEAR CONTROL HANDLE LIGHT	1	
- 27	19-84100- 7	• • INSULATOR	1	
- 28	15-84125	• • INSULATOR, ARRESTING GEAR CONTROL HANDLE	1	
- 29	15-84152	• • CLIP, ARRESTING GEAR CONTROL HANDLE LIGHT	1	
- 30	19-84100- 3	• • INSULATOR	1	
- 31	19-84101- 5	• • HANDLE, ARRESTING GEAR CONTROL, ALTERNATE 19-84101-3	1	
- 32	15-84098	• LINK, ARRESTING GEAR CONTROL CONNECTING	2	
		ATTACHING PARTS		
- 33	AN393-13	• PIN, FLAT HEAD	1	
	AN960D10L	• WASHER	3	
	AN380-2-2	• PIN, COTTER	1	
		¤----¤-¤-¤----¤		

Forward Fuselage

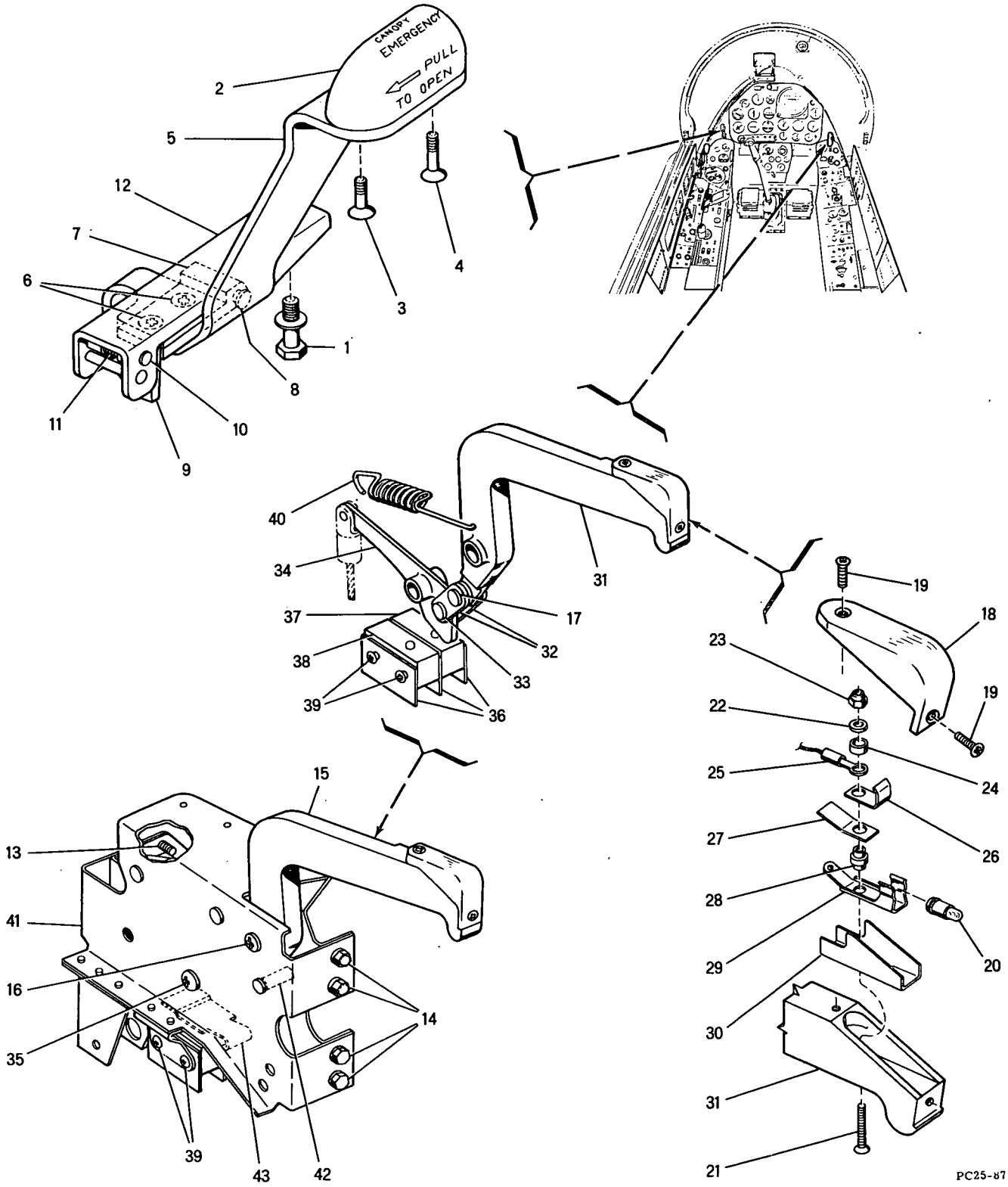

Figure 86 - Canopy Emergency Handle and Arresting Gear Control Assemblies

FIGURE & INDEX NUMBER	PART NUMBER	1 2 3 4 5 6 7 DESCRIPTION	UNITS PER ASS'Y	USABLE ON CODE
86 - 34	19-84102- 3	• ARM, ARRESTING GEAR CONTROL	1	
		ATTACHING PARTS		
- 35	NAS230-24	• SCREW	1	
	NAS74A4-014	• BUSHING	1	
	AN960D416	• WASHER	2	
	AN364-428	• NUT	1	
		¤----¤-¤-¤-----¤		
- 36	5M6-1	• INSULATOR (MDA)	3	
- 37	AN3210-1	• SWITCH, ARRESTING GEAR CONTROL	1	
- 38	AN3216-1	• SWITCH, ARRESTING GEAR WARNING & APPROACH LIGHT	1	
		ATTACHING PARTS		
- 39	AN515-6R32	• SCREW	2	
	AN960D6	• WASHER	2	
	AN365-632	• NUT	2	
		¤----¤-¤-¤-----¤		
- 40	19-84103- 3	• SPRING, ARRESTING GEAR CONTROL EXTENSION	1	
- 41	25-84005- 1	• BRACKET ASSY, ARRESTING GEAR CONTROL HANDLE	1	
- 42	19-84105- 3	• • STOP, ARRESTING GEAR CONTROL	1	
- 43	19-84104- 3	• • SPRING, ARRESTING GEAR MICRO CONTROL SWITCH FOR FUTURE PROCUREMENT USE 25-84056-3	1	A
	25-84056- 3	• • SPRING, ARRESTING GEAR MICRO CONTROL SWITCH USE FOR FUTURE PROCUREMENT TO REPLACE 19-84104-3	1	

Forward Fuselage

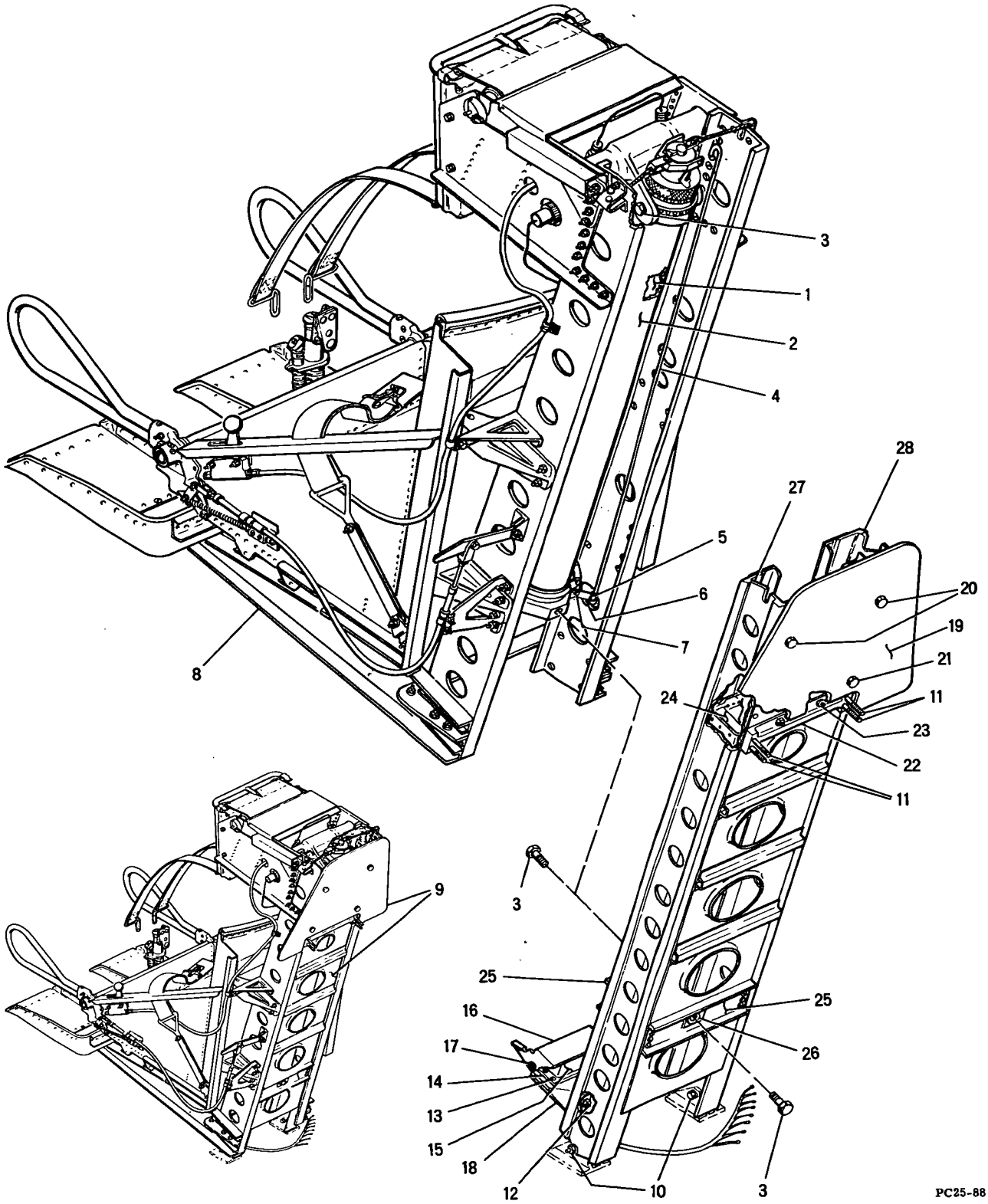

Figure 87 -- Pilot's Ejection Seat Installation

FIGURE & INDEX NUMBER	PART NUMBER	1 2 3 4 5 6 7 DESCRIPTION	UNITS PER ASS'Y	USABLE ON CODE
87 -	25-82000- 1	SEAT INSTAL, PILOTS EJECTION, SEE FIG. 73-1 FOR NEXT HIGHER ASSY	REF	
- 1	NO NUMBER	• CARTRIDGE, PERSONNEL EJECTION CATAPULT, MK 1 MOD 0, GFP	1	
- 2	NAF602200-1	• CATAPULT ASSEMBLY, PERSONNEL NAMC TYPE 1, LESS NAF216495-1, NAF217186-1 CABLE & NAF312513-1 ARM, GFP, INNER AND OUTER TUBES ARE MATCHED PARTS, SEE AN 01-245FCA-2 FOR REPLACEMENT INSTRUCTIONS	1	
		ATTACHING PARTS		
- 3	NAF312508-3	• BOLT, GFP, FURNISHED WITH NAF602200-1 CATAPULT ASSEMBLY	REF	
		¤----¤-¤-¤----¤		
- 4	25-82079- 3	• HANDLE, EJECTION SEAT CATAPULT RELEASE	1	
		ATTACHING PARTS		
- 5	AN393-9	• PIN, FLAT HEAD	1	
	AN960D10L	• WASHER	1	
	AN380-2-1	• PIN, COTTER	1	
		¤----¤-¤-¤----¤		
- 6	25-82082- 3	• ARM, EJECTION SEAT CATAPULT RELEASE, ALTERED FROM GOVERNMENT STD PART NO. NAF312513-1	1	
		ATTACHING PARTS		
- 7	NAF312508-6	• PIN, FLAT HEAD, GFP, FURNISHED WITH NAF602200-1 CATAPULT	REF	
	NAS51-25	• RING, EXTERNAL RETAINER, GFP, FURNISHED WITH NAF602200-1 CATAPULT, USE WITH INDEX 7	REF	
	NAF312508-9	• PIN, FLAT HEAD, GFP, FURNISHED WITH NAF602200-1 CATAPULT, ON CENTER LINE BOTTOM OF CATAPULT	REF	
	NAS51-18	• RING, EXTERNAL RETAINER, GFP, FURNISHED WITH NAF602200-1 CATAPULT, ON CENTER LINE BOTTOM OF CATAPULT	REF	
		¤----¤-¤-¤----¤		
- 8	25-82001- 1	• SEAT ASSY, PILOTS EJECTION, SEE FIG. 88	1	
- 9	25-82006- 1	• TRACK ASSEMBLY, EJECTION SEAT	1	
		ATTACHING PARTS		
- 10	AN4-10A	• BOLT	2	
	AN960D416	• WASHER	4	
	AN365-428	• NUT	2	
- 11	AN5-52A	• BOLT	4	
	AN960D516L	• WASHER	4	
	32-1452-054	• NUT (EN)	4	
		¤----¤-¤-¤----¤		
	25-82006- 27	• • DISCONNECT ASSY	1	
		ATTACHING PARTS		
- 12	AN3-6A	• • BOLT	2	
	AN960D10	• • WASHER	4	
	AN364-1032	• • NUT	2	
		¤----¤-¤-¤----¤		
	25-79000-113	• • • BUNDLE ASSEMBLY, WIRE	1	
		ATTACHING PARTS		
- 13	AN507-632R20	• • • SCREW	4	
	AN960D6	• • • WASHER	4	
	AN365-632	• • • NUT	4	
		¤----¤-¤-¤----¤		
- 14	74000-7	• • • • COVER (ESSX)	1	
- 15	74000-3	• • • • PLUG (ESSX)	1	
- 16	25-82094- 1	• • • COVER ASSEMBLY, QUICK DISCONNECT	1	
	25-82096- 3	• • • • SPRING, QUICK DISCONNECT COVER	1	
		ATTACHING PARTS		
- 17	AN253-3-425	• • • • PIN, HINGE	1	
	AN960D4L	• • • • WASHER	2	
		¤----¤-¤-¤----¤		
	25-82095- 3	• • • • SPACER, QUICK DISCONNECT COVER	2	
- 18	25-82088- 3	• • • FITTING, QUICK DISCONNECT LOWER	1	
- 19	25-70001- 3	• • PLATE, PILOTS HEAD ARMOR, FOR FUTURE PROCUREMENT USE 25-70001-5	1	A
	25-70001- 5	• • PLATE, PILOTS HEAD ARMOR, USE FOR FUTURE PROCUREMENT TO REPLACE 25-70001-3	1	

FIGURE & INDEX NUMBER	PART NUMBER	1 2 3 4 5 6 7 DESCRIPTION	UNITS PER ASS'Y	USABLE ON CODE
87 -		ATTACHING PARTS		
- 20	AN5-21A	• • BOLT	2	
	AN960D516	• • WASHER	2	
	NAS42HT10-66	• • SPACER	2	
- 21	AN5-21A	• • BOLT	2	
	AN960D516	• • WASHER	2	
	NAS42HT10-65	• • SPACER	2	
		¤----¤-¤-¤----¤		
- 22	25-82040- 3	• • SPACER, EJECTION SEAT UPPER	1	
		ATTACHING PARTS		
- 23	AN4-6A	• • BOLT	4	
	AN960D416L	• • WASHER	8	
	AN365-428	• • NUT	4	
		¤----¤-¤-¤----¤		
- 24	25-82029- 3	• • FITTING, TRACK RIB	2	
- 25	25-82076- 1	• • SUPPORT ASSY, EJECTION SEAT TRACK TRUNNION LOWER	2	
- 26	15-80623- 3	• • • SLEEVE, EJECTION SEAT CATAPULT ATTACH BOLT	1	
- 27	25-82075- 3	• • TRACK, EJECTION SEAT LEFT SIDE	1	
- 28	25-82075- 5	• • TRACK, EJECTION SEAT RIGHT SIDE	1	

FIGURE & INDEX NUMBER	PART NUMBER	1 2 3 4 5 6 7 DESCRIPTION	UNITS PER ASS'Y	USABLE ON CODE
88 -	25-82001- 1	SEAT ASSY, PILOTS EJECTION, SEE FIG. 87-8 FOR NEXT HIGHER ASSY	REF	
- 1	25-76002- 1	. ELECTRICAL INSTL, EJECTION SEAT, SEE FIG. 89	1	
- 2	NAF1259-1L	. STRAP, SHOULDER, GFP	1	
- 3	NAF1259-1R	. STRAP, SHOULDER, GFP	1	
		ATTACHING PARTS		
	AN25-13A	. BOLT	2	
	AN960D516	. WASHER	2	
	AN364-524	. NUT	2	
		¤----¤-¤-¤----¤		
- 4	NAF1201-8	. BELT, LAP, GFP	1	
		ATTACHING PARTS		
- 5	AN5-7	. BOLT	2	
	AN960-516	. WASHER	4	
	AN310-5	. NUT	2	
	AN380-2-4	. PIN, COTTER	2	
		¤----¤-¤-¤----¤		
- 6	25-82108- 1	. LINK ASSY, LAP BELT	2	
		ATTACHING PARTS		
- 7	3M21S12	. BOLT (MDA)	2	
	AN960D516	. WASHER	6	
	AN310-5	. NUT	2	
	AN380-2-4	. PIN, COTTER	2	
		¤----¤-¤-¤----¤		
- 8	R534	. ACTUATOR, PILOTS SEAT (ARBN) MCDONNELL SPEC. 25-69016-1	1	
		ATTACHING PARTS		
- 9	AN178-21	. BOLT	2	
	AN960D816	. WASHER	8	
	AN310-8	. NUT	2	
	AN380-3-4	. PIN, COTTER	2	
		¤----¤-¤-¤----¤		
	E2200M1	. . MOTOR (ARBN)	1	
	E1859	. . . BRUSH (ARBN)	2	
- 10	25-82011- 1	. CONTROLS INSTALLATION, EJECTION SEAT CANOPY PRE-EJECTION, SEE FIG. 90	1	
- 11	25-82012- 1	. CONTROLS INSTL, INERTIA REEL, SEE FIG. 90	1	
- 12	25-82065- 3	. RAIL, EJECTION SEAT BUCKET SLIDE LOWER	2	
		ATTACHING PARTS		
	AN509-616R24	. SCREW	2	
	1452-064	. NUT, BARREL (EN)	2	
		¤----¤-¤-¤----¤		
- 13	25-82065- 5	. RAIL, EJECTION SEAT BUCKET SLIDE UPPER	2	
		ATTACHING PARTS		
	AN509-616R24	. SCREW	2	
	1452-064	. NUT, BARREL (EN)	2	
		¤----¤-¤-¤----¤		
	25-82002- 1	. BUCKET ASSEMBLY, EJECTION SEAT	1	
- 14	25-82057- 1	. . BRACE ASSY, EJECTION SEAT LEG, LEFT SIDE	1	
- 15	25-82057- 3	. . BRACE ASSY, EJECTION SEAT LEG, RIGHT SIDE	1	
		ATTACHING PARTS		
- 16	NAS229-28	. . SCREW	6	
	AN960D10	. . WASHER	12	
	AN365-1032	. . NUT	6	
		¤----¤-¤-¤----¤		
- 17	15-80752- 3	. . . NAMEPLATE, EJECTION SEAT PRE-EJECTION LEVER	1	
- 18	25-82026- 3	. . . FITTING, KNEE BRACE SOCKET, LEFT SIDE	1	
	25-82026- 5	. . . FITTING, KNEE BRACE SOCKET, RIGHT SIDE	1	
		ATTACHING PARTS		
- 19	NAS229-35	. . . SCREW	1	
	AN960D10	. . . WASHER	1	
	AN365-1032	. . . NUT	1	
- 20	NAS229-22	. . . SCREW	2	
	AN960D10	. . . WASHER	2	
	AN365-1032	. . . NUT	2	
		¤----¤-¤-¤----¤		
- 21	25-82057- 5	. . . TUBE	1	
- 22	25-82043- 3	. . SPRING, OVERCENTER LINK EXTENSION	1	
- 23	25-82044- 5	. . LINK, KNEE BRACE OVERCENTER CONNECTOR	1	

Forward Fuselage

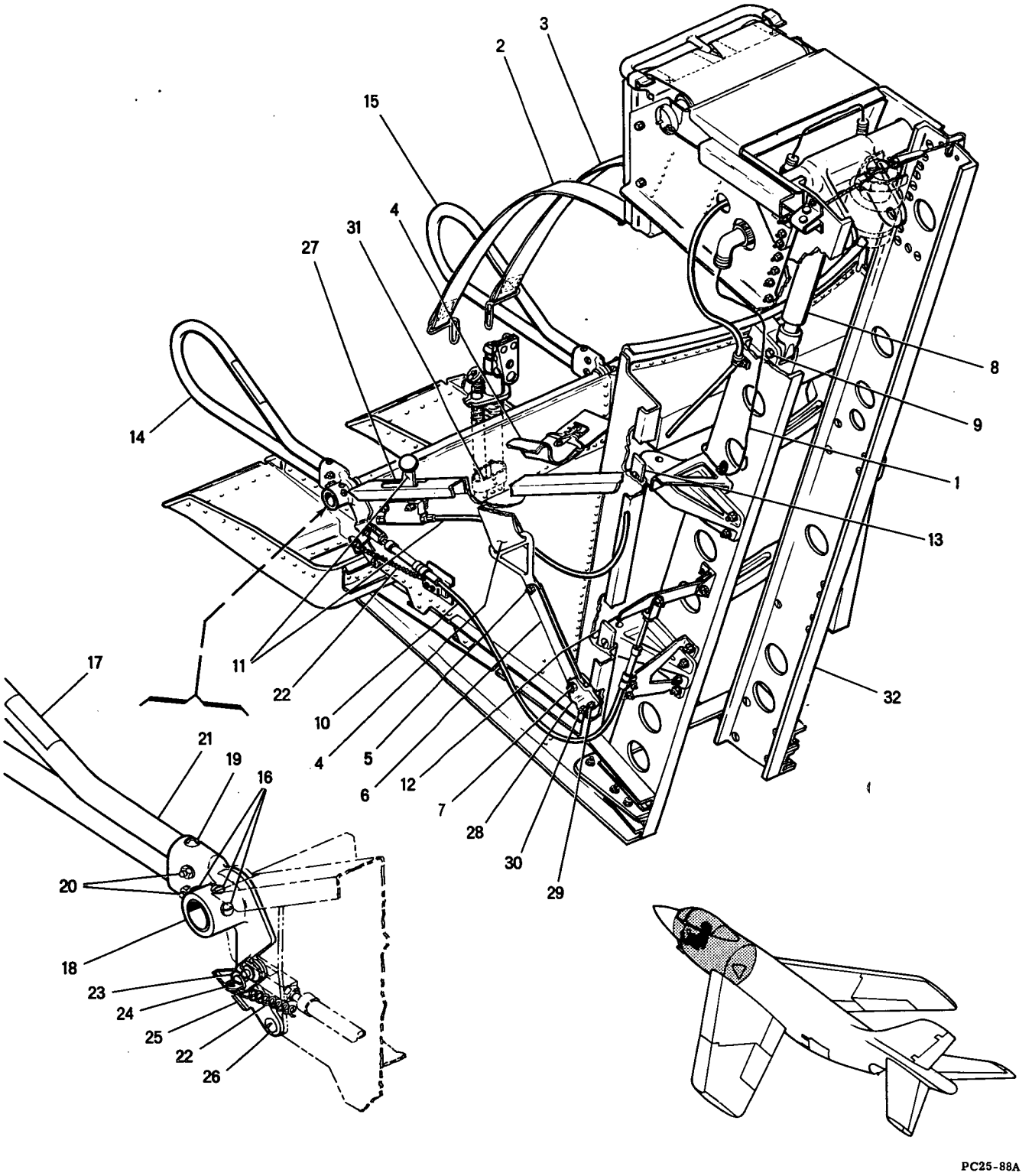

Figure 88 -- Pilot's Ejection Seat Assembly

FIGURE & INDEX NUMBER	PART NUMBER	1 2 3 4 5 6 7 DESCRIPTION	UNITS PER ASS'Y	USABLE ON CODE
88 -		ATTACHING PARTS		
- 24	AN42-6	• • BOLT, EYE	1	
	AN960D10	• • WASHER	3	
	AN310-3	• • NUT	1	
	AN381-2-12	• • PIN, COTTER	1	
		¤----¤-¤-¤----¤		
- 25	25-82045- 3	• • LINK, KNEE BRACE OVERCENTER	1	
		ATTACHING PARTS		
- 26	AN23-14	• • BOLT	1	
	AN960D10	• • WASHER	4	
	AN320-3	• • NUT	1	
	AN381-2-12	• • PIN, COTTER	1	
		¤----¤-¤-¤----¤		
- 27	15-80163	• • NAMEPLATE, EJECTION SEAT SHOULDER HARNESS CONTROL, LEFT SIDE	1	
	15-80465- 3	• • NAMEPLATE, EJECTION SEAT ADJUSTMENT, RIGHT SIDE	1	
- 28	25-82031- 5	• • FITTING, LAP SAFETY BELT ATTACHMENT LH	1	
	25-82031- 6	• • FITTING, LAP SAFETY BELT ATTACHMENT RH	1	
		ATTACHING PARTS		
- 29	AN4-7A	• • BOLT	2	
	AN960D416	• • WASHER	4	
	AN365-428	• • NUT	2	
- 30	AN509-416R14	• • SCREW	2	
	AN960D416	• • WASHER	2	
	AN365-428	• • NUT	2	
		¤----¤-¤-¤----¤		
- 31	25-82047- 3	• • SPRING, QUICK DISCONNECT GUIDE	1	
	25-82105- 3	• • LATCH, QUICK DISCONNECT GUIDE, USE WITH INDEX 31	1	
- 32	25-82004- 1	• FRAME ASSEMBLY, EJECTION SEAT, SEE FIG. 91	1	

Forward Fuselage

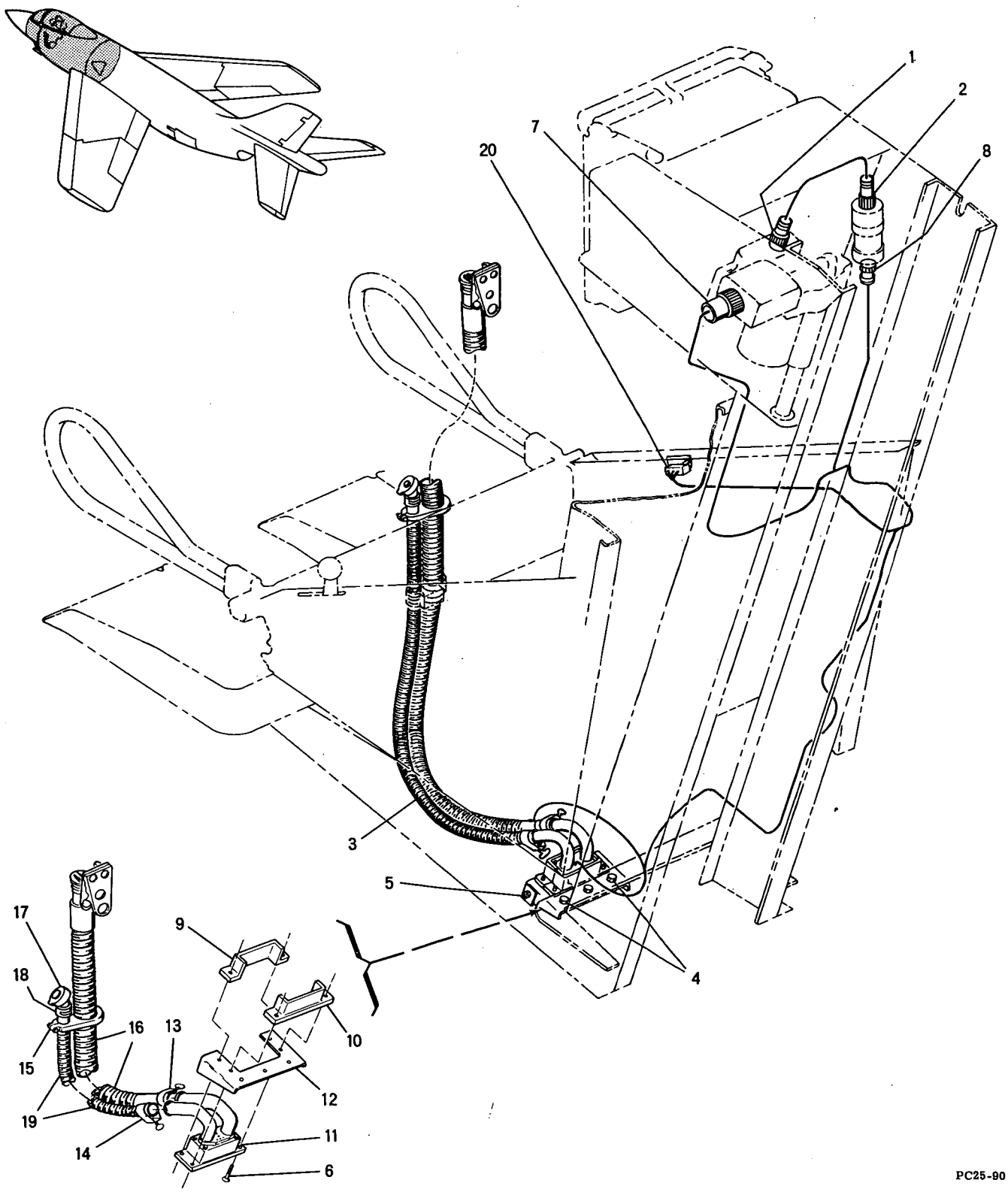

Figure 89 -- Ejection Seat Electrical Installation

FIGURE & INDEX NUMBER	PART NUMBER	1 2 3 4 5 6 7 DESCRIPTION	UNITS PER ASS'Y	USABLE ON CODE
89 -	25-76002- 1	ELECTRICAL INSTALLATION, EJECTION SEAT, SEE FIG. 88-1 FOR NEXT HIGHER ASSY	REF	
	25-79000-119	• BUNDLE ASSEMBLY, WIRE	1	A-C
- 1	AN3101-10SL4P	• • RECEPTACLE, INERTIA REEL, USE WITH AN3054-4 NUT	1	
- 2	3106BS10SL4S	• • PLUG (CED) INERTIA SWITCH, USE WITH MS29513-12 O RING	1	
- 3	25-82013- 1	• DISCONNECT ASSY, PILOTS EJECTION SEAT QUICK	1	
		ATTACHING PARTS		
- 4	AN3-6A	• BOLT	3	
	AN960D10	• WASHER	6	
	AN365-1032	• NUT	3	
- 5	AN509-10R10	• SCREW	1	
	AN960D10	• WASHER	2	
	25-82001- 5	• SHIM	AR	
	AN364-1032	• NUT	1	
		¤----¤-¤-¤----¤		
	25-79000-117	• • BUNDLE ASSY, WIRE	1	
		ATTACHING PARTS		
- 6	AN507-632R7	• • SCREW	4	
		¤----¤-¤-¤----¤		
- 7	3106BS14S7S	• • • PLUG (CED) SEAT ACTUATOR, USE WITH MS29513-14 O RING	1	
- 8	3106BS10SL4S	• • • PLUG (CED) INERTIA SWITCH, USE WITH MS29513-12 O RING	1	
- 9	74000-11	• • • COVER (ESSX)	1	
- 10	74000-9	• • • COVER (ESSX)	1	
- 11	74000-5	• • • RECEPTACLE (ESSX)	1	
- 12	25-82027- 5	• • BRACKET, QUICK DISCONNECT UPPER SUPPORT	1	
	25-82092- 1	• • DISCONNECT ASSEMBLY, PILOTS COMPOSITE	1	
		ATTACHING PARTS		
- 13	QS200M12S	• • CLAMP (BC)	1	
- 14	QS200M8S	• • CLAMP (BC)	1	
		¤----¤-¤-¤----¤		
- 15	25-82091- 1	• • • CLAMP ASSEMBLY, OXY AND ANTI-BLACKOUT	1	
- 16	25-82092- 5	• • • TUBE ASSY, OXY, ALTERED FROM D100-542 (DARL)	1	
	25-82092- 3	• • • TUBE ASSEMBLY, ANTI-BLACKOUT	1	
- 17	1171	• • • • FITTING, BLACKOUT (CDE)	1	
		ATTACHING PARTS		
- 18	A3122-14-3	• • • • CLAMP (TIN)	1	
		¤----¤-¤-¤----¤		
- 19	25-80055- 5	• • • • TUBE, REGULATOR TO QUICK DISCONNECT ANTI-BLACKOUT	1	
- 20	AN3021-7	• SWITCH, SEAT ADJUSTMENT	1	
	25-76139- 3	• INSULATOR, SWITCH TERMINAL, USE WITH INDEX 20	1	

Forward Fuselage

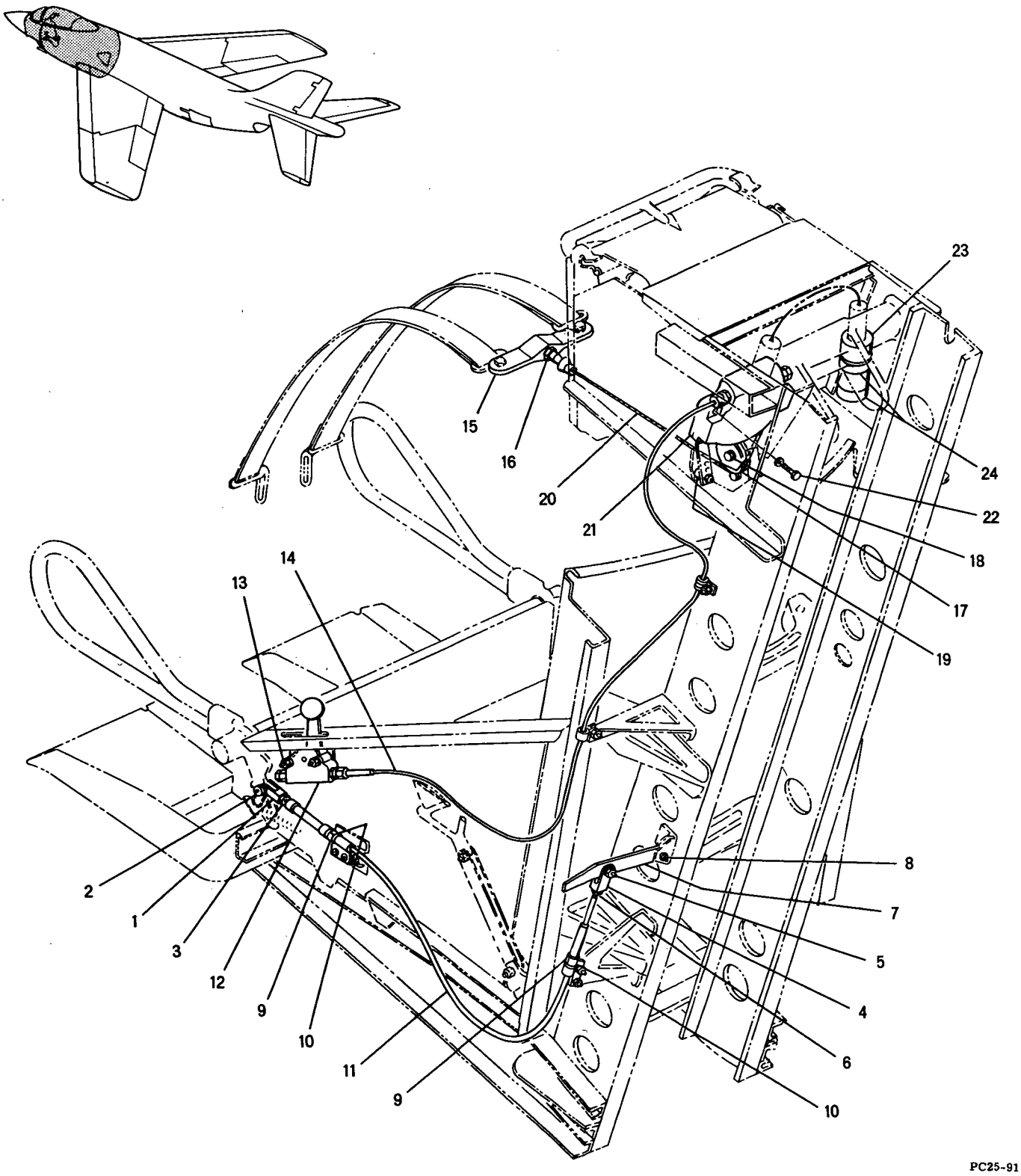

Figure 90 -- Ejection Seat Canopy Pre-Ejection and Inertia Reel Controls Installations

FIGURE & INDEX NUMBER	PART NUMBER	1 2 3 4 5 6 7 DESCRIPTION	UNITS PER ASS'Y	USABLE ON CODE
90 -	25-82011- 1	CONTROLS INSTL, EJECTION SEAT CANOPY PRE-EJECTION SEE FIG. 88-10 FOR NEXT HIGHER ASSEMBLY	REF	
- 1	25-82023- 3	• CLEVIS, EJECTION SEAT CONTROLS	1	
		ATTACHING PARTS		
- 2	AN23-13	• BOLT, CLEVIS	1	
	AN960-10L	• WASHER	1	
	AN320-3	• NUT	1	
	AN380-2-3	• PIN, COTTER	1	
		¤----¤-¤-¤----¤		
- 3	AN315-3R	• NUT	1	
- 4	25-82023- 7	• CLEVIS, EJECTION SEAT CONTROLS	1	
		ATTACHING PARTS		
- 5	AN23-13	• BOLT, CLEVIS	1	
	AN960-10L	• WASHER	1	
	AN320-3	• NUT	1	
	AN380-2-3	• PIN, COTTER	1	
		¤----¤-¤-¤----¤		
- 6	AN315-3L	• NUT	1	
- 7	25-82086- 3	• LINK, EJECTION SEAT CANOPY PRE-EJECTION	1	
		ATTACHING PARTS		
- 8	AN3-7A	• BOLT	1	
	AN960-10L	• WASHER	1	
	AN365-1032	• NUT	1	
		¤----¤-¤-¤----¤		
- 9	15-35474- 3	• CLAMP, CANOPY EMERGENCY CONTROLS LH	2	
- 10	15-35474- 4	• CLAMP, CANOPY EMERGENCY CONTROLS RH	2	
- 11	SA4188-1	• CABLE ASSEMBLY, PUSH-PULL (ACA)	1	
	25-82012- 1	CONTROLS INSTL, INERTIA REEL, SEE FIG. 88-11 FOR NEXT HIGHER ASSY	REF	
- 12	18120-2	• CONTROL, MANUAL (ASE) ALTERNATE R0000-0002 (ASE)	1	
		ATTACHING PARTS		
- 13	AN509-10R24	• SCREW	2	
	NAS43-3-5	• SPACER	2	
	AN960D10	• WASHER	2	
	AN365-1032	• NUT	2	
		¤----¤-¤-¤----¤		
- 14	18140-2	• CABLE ASSEMBLY, PUSH-PULL CONTROLS (ASE) 52.0 IN. LONG; ALTERNATE RA2000-000256 (ASE)	1	
- 15	25-82104- 3	• FITTING, INERTIA REEL EJECTION SEAT	1	
- 16	AN316-5R	• NUT	1	
- 17	15-80648- 1	• PULLEY ASSY, EJECTION SEAT SHOULDER HARNESS	1	
		ATTACHING PARTS		
- 18	AN4-11A	• BOLT	1	
	AN960D416	• WASHER	2	
	AN365-428	• NUT	1	
		¤----¤-¤-¤----¤		
	4M33A7-015	• • BUSHING, (MDA)	1	
	15-80649- 3	• BUSHING, EJECTION SEAT SHOULDER HARNESS	1	
- 19	25-82093- 3	• SPACER, EJECTION SEAT INERTIA REEL STOP	1	
		ATTACHING PARTS		
	AN3-11A	• BOLT	2	
	AN960D10L	• WASHER	2	
	AN960D10	• WASHER	2	
	AN364-1032	• NUT	2	
		¤----¤-¤-¤----¤		
- 20	18080-06	• CABLE (ASE) FURNISHED WITH 18050A02 INERTIA REEL (ASE)	REF	
- 21	18050A02	• INERTIA REEL ASSEMBLY (ASE) ALTERNATE RA206-29 (ASE)	1	
		ATTACHING PARTS		
- 22	AN4-16A	• BOLT	4	
	AN960D416	• WASHER	4	
		¤----¤-¤-¤----¤		
- 23	18090-1	• SWITCH (ASE) ALTERNATE R0000-005 (ASE)	1	
		ATTACHING PARTS		
- 24	AN742D24	• CLAMP	2	
	NAS229-11	• SCREW	2	
	AN960D10	• WASHER	2	
	AN365-1032	• NUT	2	
		¤----¤-¤-¤----¤		

Forward Fuselage

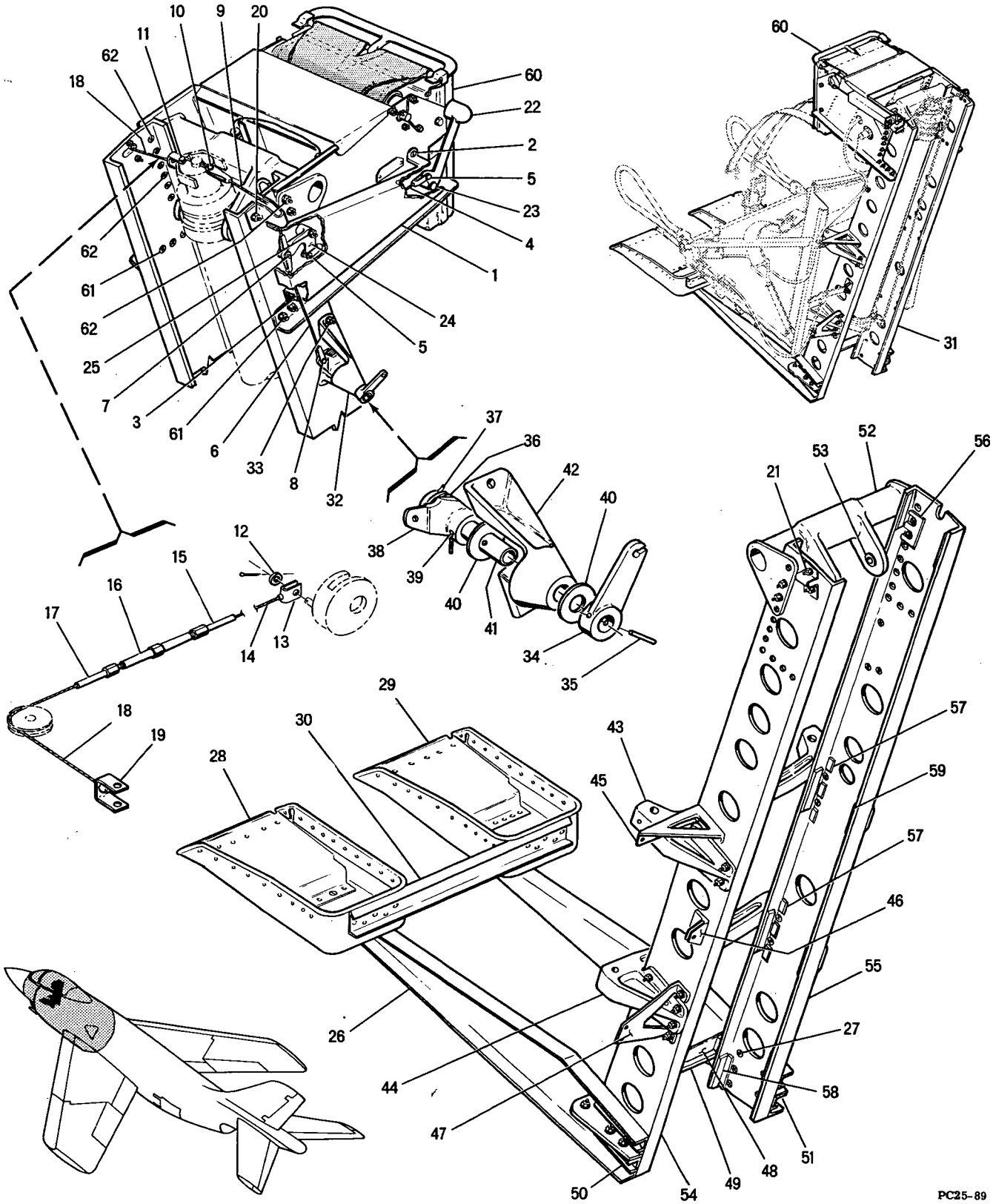

Figure 91 -- Ejection Seat Frame Assembly

FIGURE & INDEX NUMBER	PART NUMBER	1 2 3 4 5 6 7 DESCRIPTION	UNITS PER ASS'Y	USABLE ON CODE
91 -	25-82004- 1	FRAME ASSEMBLY, EJECTION SEAT, SEE FIG. 88-32 NEXT HIGHER ASSY	REF	
- 1	25-82077- 3	• GUARD, EMERGENCY SAFETY PIN PULL MECHANISM	1	
		ATTACHING PARTS		
- 2	AN500A8-8	• SCREW	2	
	AN960D8	• WASHER	2	
- 3	AN507-832R10	• SCREW	2	
	AN960D8	• WASHER	2	
	AN365-832	• NUT	2	
		¤----¤-¤-¤----¤		
- 4	NAS323R22-0106	• CABLE ASSEMBLY, EMERGENCY SAFETY PIN PULL	1	
		ATTACHING PARTS		
- 5	AN393-9	• PIN, FLAT HEAD	2	
	AN960D10L	• WASHER	2	
	AN381-2-8	• PIN, COTTER	2	
		¤----¤-¤-¤----¤		
- 6	NAS323R23-0096	• CABLE ASSEMBLY, CANOPY SAFETY PIN PULL CONTROL	1	
		ATTACHING PARTS		
- 7	AN393-21	• PIN, FLAT HEAD	1	
	AN960D10L	• WASHER	1	
	AN381-2-8	• PIN, COTTER	1	
- 8	AN393-13	• PIN, FLAT HEAD	1	
	AN960D10	• WASHER	1	
	AN381-2-8	• PIN, COTTER	1	
		¤----¤-¤-¤----¤		
- 9	NAS323R22-0083	• CABLE ASSEMBLY, EMERGENCY SAFETY PIN PULL	1	
		ATTACHING PARTS		
- 10	AN393-13	• PIN, FLAT HEAD	1	
	AN960D10	• WASHER	1	
	AN380-2-1	• PIN, COTTER	1	
		¤----¤-¤-¤----¤		
	25-82068- 1	• CABLE ASSEMBLY, PERSONNELL CATAPULT FIRING	1	
		ATTACHING PARTS		
- 11	AN393-21	• PIN, FLAT HEAD	1	
	AN960D10	• WASHER	1	
	AN380-2-1	• PIN, COTTER	1	
- 12	AN960D10L	• WASHER	1	
	AN381-2-8	• PIN, COTTER	1	
		¤----¤-¤-¤----¤		
- 13	25-82068- 7	• • CLIP	1	
- 14	25-82068- 3	• • CABLE	1	
- 15	AN669S2LH	• • TERMINAL, CABLE	1	
- 16	AN155-8S	• • BARREL, TURNBUCKLE	1	
- 17	AN669S2RH	• • TERMINAL, CABLE	1	
- 18	25-82068- 5	• • CABLE	1	
- 19	15-80726- 3	• • CLIP, PERSONNELL CATAPULT FIRING	1	
	25-82069- 1	• BRACKET ASSEMBLY, MANUAL CATAPULT SAFETY PIN	1	
		ATTACHING PARTS		
- 20	AN509-10R12	• SCREW	2	
	AN960D10	• WASHER	2	
	AN365-1032	• NUT	2	
		¤----¤-¤-¤----¤		
	AN210-1B	• • PULLEY	1	
	25-82067- 1	• BRACKET ASSEMBLY, PERSONNELL CATAPULT FIRING	1	
		ATTACHING PARTS		
- 21	AN509-10R12	• SCREW	2	
	AN960D10	• WASHER	2	
	AN365-1032	• NUT	2	
		¤----¤-¤-¤----¤		
	AN210-1B	• • PULLEY	1	
- 22	25-82061- 3	• HANDLE, EMERGENCY SAFETY PIN PULL	1	
		ATTACHING PARTS		
- 23	AN394-43	• PIN, FLAT HEAD	1	
	AN960D416L	• WASHER	1	
	AN381-2-8	• PIN, COTTER	1	
		¤----¤-¤-¤----¤		
- 24	25-82074- 3	• BELL CRANK, EMERGENCY SAFETY PIN PULL, FOR FUTURE PROCUREMENT USE 25-82074-5	1	A-C
	25-82074- 5	• BELL CRANK, EMERGENCY SAFETY PIN PULL, USE FOR FUTURE PROCUREMENT TO REPLACE 25-82074-3	1	

FIGURE & INDEX NUMBER	PART NUMBER	1 2 3 4 5 6 7 DESCRIPTION	UNITS PER ASS'Y	USABLE ON CODE
91 -		ATTACHING PARTS		
- 25	AN509-516R30	• SCREW	1	
	NAS72-5-013	• BUSHING	1	
	4M36-02009	• WASHER (MDA)	1	
	AN365-524	• NUT	1	
		¤----¤-¤-¤----¤		
	25-82008- 9	• GUARD, PERSONNELL CATAPULT FIRING CABLE	1	
- 26	25-82009- 1	• SUPPORT ASSEMBLY, EJECTION SEAT FOOTREST	1	
		ATTACHING PARTS		
- 27	AN509-416R13	• SCREW	8	
	AN960D416	• WASHER	8	
	AN365-428	• NUT	8	
		¤----¤-¤-¤----¤		
- 28	25-82009- 23	• • STIRRUP LH	1	
- 29	25-82009- 24	• • STIRRUP RH	1	
- 30	25-82009- 31	• • CHANNEL	1	
- 31	25-82010- 1	• RAIL ASSEMBLY, EJECTION SEAT SUPPORT	1	A-C
- 32	25-82097- 1	• • LINK ASSEMBLY, CANOPY SAFETY PIN PULL	1	
		ATTACHING PARTS		
- 33	AN509-416R14	• • SCREW	3	
	AN960D416	• • WASHER	3	
	AN365-428	• • NUT	3	
		¤----¤-¤-¤----¤		
- 34	25-82098- 3	• • • LINK, CANOPY SAFETY PIN PULL OUTBOARD	1	
		ATTACHING PARTS		
- 35	52-032-156-1125	• • • PIN, ROLL (EN)	1	
		¤----¤-¤-¤----¤		
- 36	25-82102- 5	• • • SPRING, CANOPY SAFETY PIN PULL	1	
		ATTACHING PARTS		
- 37	52-022-094-1625	• • • PIN, ROLL (EN)	1	
		¤----¤-¤-¤----¤		
- 38	25-82099- 3	• • • LINK, CANOPY SAFETY PIN PULL INBOARD	1	
		ATTACHING PARTS		
- 39	52-032-156-1000	• • • PIN, ROLL (EN)	1	
		¤----¤-¤-¤----¤		
- 40	AN960-1016L	• • • WASHER	2	
- 41	25-82100- 3	• • • SHAFT, CANOPY SAFETY PIN PULL	1	
- 42	25-82101- 3	• • • SUPPORT, CANOPY SAFETY PIN PULL LINK	1	
- 43	25-82051- 3	• • FITTING, EJECTION SEAT SUPPORT UPPER	1	
		ATTACHING PARTS		
	AN509-516R16	• • SCREW	8	
	AN960D516	• • WASHER	8	
	AN365-524	• • NUT	8	
		¤----¤-¤-¤----¤		
- 44	25-82052- 3	• • FITTING, EJECTION SEAT SUPPORT LOWER	1	
		ATTACHING PARTS		
	AN509-516R16	• • SCREW	8	
	AN960D516	• • WASHER	8	
	AN365-524	• • NUT	8	
		¤----¤-¤-¤----¤		
- 45	25-82049- 3	• • BRACKET, INERTIA REEL CONTROL CABLE EJECTION SEAT	1	A-C
		ATTACHING PARTS		
	AN509-10R14	• • SCREW	2	
	AN960D10	• • WASHER	2	
	AN365-1032	• • NUT	2	
		¤----¤-¤-¤----¤		
- 46	25-82085- 3	• • BRACKET, EJECTION SEAT CANOPY PRE-EJECTION	1	A-C
- 47	25-82066- 3	• • SUPPORT, CANOPY JETTISON CONTROL	1	A-C
- 48	25-82107- 3	• • ANGLE, SEAT COMPOSITE DISCONNECT	1	
		ATTACHING PARTS		
	AN509-10R19	• • SCREW	4	
	25-82107- 5	• • SPACER, SEAT COMPOSITE DISCONNECT	2	
	AN960D10	• • WASHER	4	
	AN365-1032	• • NUT	4	
		¤----¤-¤-¤----¤		
- 49	25-82054- 3	• • FITTING, EJECTION SEAT FRAME & FOOT STIRRUP	1	A-C
- 50	25-82009- 19	• • ANGLE, EJECTION SEAT FOOTREST	1	
- 51	25-82009- 20	• • ANGLE, EJECTION SEAT FOOTREST	1	

FIGURE & INDEX NUMBER	PART NUMBER	1 2 3 4 5 6 7 DESCRIPTION	UNITS PER ASS'Y	USABLE ON CODE
91 - 52	25-82084- 1	• • FITTING ASSEMBLY, EJECTION SEAT CATAPULT UPPER SUP.	1	
		ATTACHING PARTS		
	AN509-516R17	• • SCREW	4	
	AN960D516	• • WASHER	4	
	AN365-524	• • NUT	4	
		¤----¤-¤-¤----¤		
- 53	15-80623- 3	• • • SLEEVE, EJECTION SEAT CATAPULT ATTACHING BOLT	2	
	25-82008- 15	• • FILLER, EJECTION SEAT HEADREST	2	A-C
- 54	25-82063- 1	• • CHANNEL ASSEMBLY, EJECTION SEAT, LEFT SIDE	1	A-C
- 55	25-82063- 3	• • CHANNEL ASSEMBLY, EJECTION SEAT, RIGHT SIDE	1	A-C
- 56	25-82041- 3	• • • PAD, EJECTION SEAT SIDE	1	
- 57	25-82041- 5	• • • PAD, EJECTION SEAT SIDE, RIGHT SIDE	6	
	25-82041- 5	• • • PAD, EJECTION SEAT SIDE, LEFT SIDE	5	
- 58	25-82041- 7	• • • PAD, EJECTION SEAT SIDE	1	
- 59	25-82042- 3	• • • PAD, EJECTION SEAT SIDE	8	
- 60	25-82003- 1	• HEADREST ASSEMBLY, EJECTION SEAT, SEE FIG. 92	1	
		ATTACHING PARTS		
- 61	AN509-10R12	• SCREW	14	
	AN960D10	• WASHER	14	
	AN365-1032	• NUT	14	
- 62	AN509-516R17	• SCREW	3	
	AN960D516	• WASHER	3	
	AN365-524	• NUT	3	
		¤----¤-¤-¤----¤		

Forward Fuselage

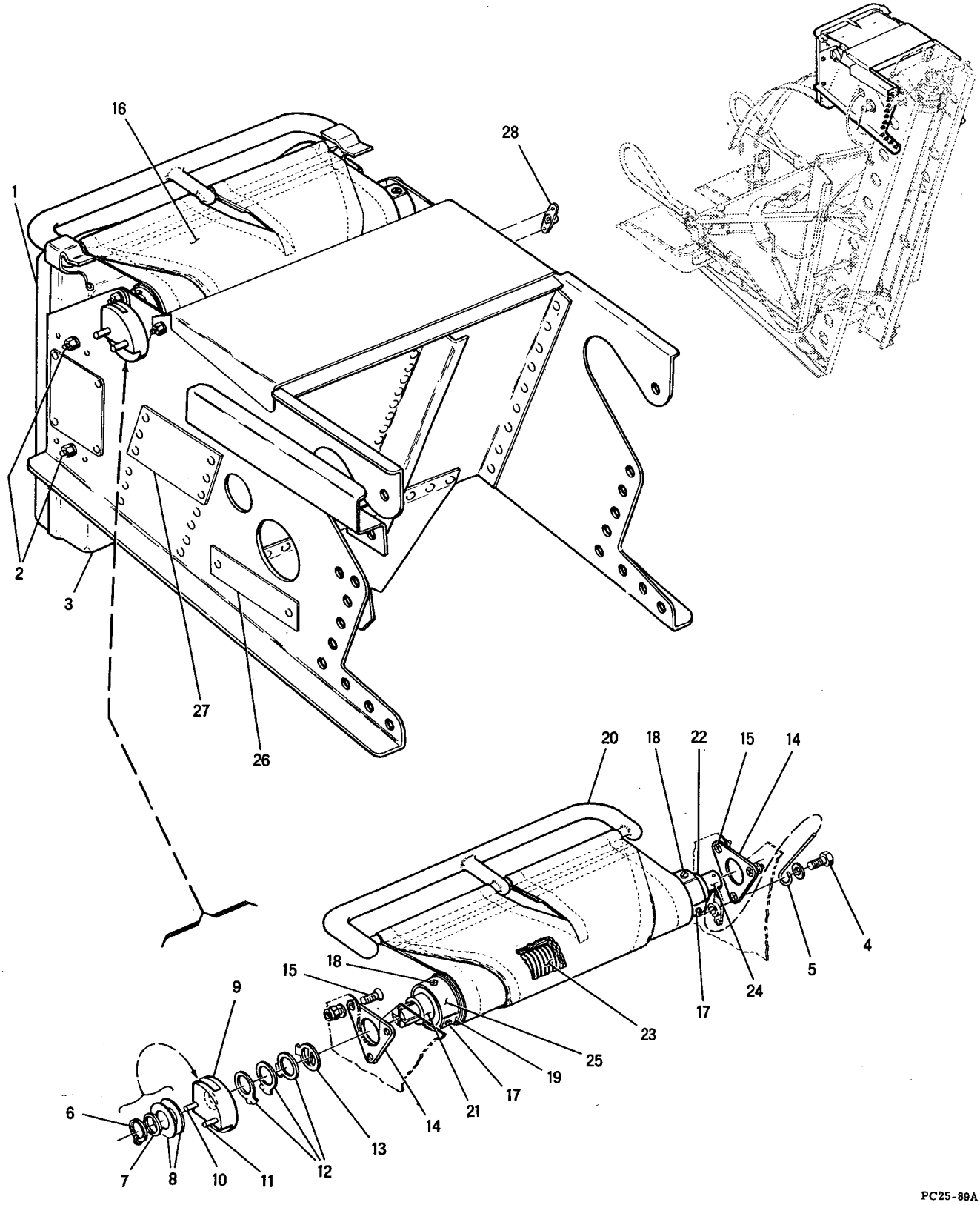

Figure 92 -- Ejection Seat Headrest Assembly

FIGURE & INDEX NUMBER	PART NUMBER	1 2 3 4 5 6 7 DESCRIPTION	UNITS PER ASS'Y	USABLE ON CODE
92 -	25-82003- 1	HEADREST ASSEMBLY, EJECTION SEAT, SEE FIG. 91-60 FOR NEXT HIGHER ASSY	REF	
- 1	25-82036- 1	• CUSHION ASSEMBLY, EJECTION SEAT HEADREST	1	
		ATTACHING PARTS		
- 2	AN3-5A	• BOLT	4	
	AN960D10	• WASHER	4	
		¤----¤-¤-¤-----¤		
	25-82021- 3	• • CUSHION, PILOTS EJECTION SEAT HEADREST	1	
- 3	25-82037- 1	• • FRAME ASSEMBLY, EJECTION SEAT HEADREST CUSHION	1	
- 4	AN3-5A	• BOLT, CUSHION ROLLER PRE-LOAD PIN RETAINER	1	
	AN960D10L	• WASHER	1	
- 5	15-80766- 3	• PIN, EJECTION SEAT FACE CURTAIN TENSION ADJUSTMENT	1	
- 6	NAS51-56	• RING, EXT RETAINER	1	
- 7	4M36-04005	• WASHER (MDA)	1	
- 8	AN960-916L	• WASHER	1	
- 9	25-82016- 1	• ARM ASSEMBLY, PERSONNEL CATAPULT FIRING	1	
- 10	9M26-12-0060	• • PIN (MDA)	1	
- 11	25-82016- 5	• • PIN, ALTERED FROM 9M26-12-0115 (MDA)	1	
- 12	25-82017- 3	• WASHER, EJECTION SEAT FACE CURTAIN ROLLER	3	
- 13	15-80779- 3	• WASHER, EJECTION SEAT FACE CURTAIN ROLLER	1	
- 14	19-80116- 3	• BEARING, EJECTION SEAT FACE CURTAIN ROLLER	2	
		ATTACHING PARTS		
- 15	AN509-10R8	• SCREW	6	
	AN960D10	• WASHER	6	
	AN364-1032	• NUT	6	
		¤----¤-¤-¤-----¤		
- 16	25-82019- 1	• ROLLER ASSY, EJECTION SEAT FACE PROTECTOR	1	
- 17	AN502-10-8	• • SCREW	4	
	AN960D10L	• • WASHER	4	
- 18	AN502-10-6	• • SCREW	2	
	AN960D10L	• • WASHER	2	
- 19	15-80791- 3	• • PLATE, EJECTION SEAT FACE CURTAIN RETAINING	1	
	15-80735- 1	• • CURTAIN ASSEMBLY, EJECTION SEAT	1	
- 20	15-80763- 1	• • • HANDLE ASSY, EJECTION SEAT FACE CURTAIN	1	
- 21	25-82018- 3	• • BEARING, EJECTION SEAT FACE CURTAIN ROLLER, LEFT SIDE	1	
- 22	15-80729- 3	• • BEARING, EJECTION SEAT FACE CURTAIN ROLLER, RIGHT SIDE	1	
- 23	15-80268	• • SPRING, EJECTION SEAT FACE PROTECTOR CURTAIN ROLLER	1	
- 24	15-80433- 3	• • ROD, EJECTION SEAT FACE CURTAIN	1	
- 25	15-80730- 3	• • ROLLER, EJECTION SEAT FACE CURTAIN	1	
	25-82008- 1	• SUPPORT ASSEMBLY, EJECTION SEAT HEADREST	1	
- 26	25-89030- 3	• • NAMEPLATE, EJECTION SEAT CATAPULT CAUTION	1	
- 27	25-89048- 3	• • NAMEPLATE, EJECTION SEAT PARACHUTE TYPE	1	
	25-89064- 3	• • NAMEPLATE, EJECTION SEAT HEADREST, RIGHT SIDE CURTAIN WINDER	1	
	25-89065- 3	• • NAMEPLATE, MANUAL CATAPULT SAFETY PIN PULL, RIGHT SIDE	1	
- 28	15-60225	• • RETAINER, NUT SPACER	1	

Forward Fuselage

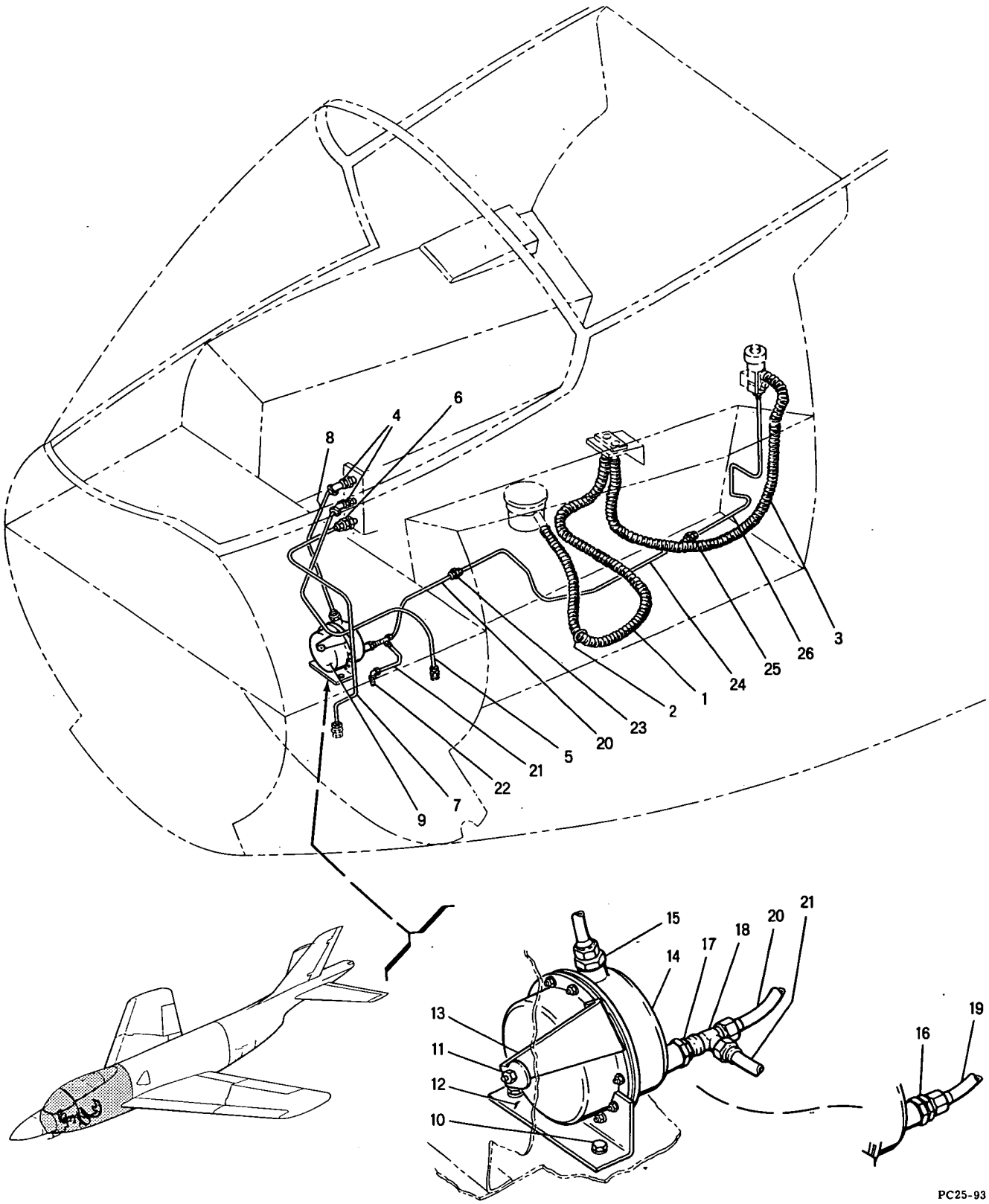

Figure 93 - Cockpit Oxygen, Anti-Blackout, Pitot, Static, and Turn and Bank Installations

FIGURE & INDEX NUMBER	PART NUMBER	1 2 3 4 5 6 7 DESCRIPTION	UNITS PER ASS'Y	USABLE ON CODE
93 -	25-80003- 1	SYSTEM INSTALLATION, OXYGEN & ANTI-BLACKOUT, SEE FIG. 73-38 FOR NEXT HIGHER ASSEMBLY	REF	
- 1	25-80054- 3	• TUBE, OXYGEN REGULATOR TO QUICK DISCONNECT	1	
- 2	295246-20A	• GROMMET (MKL)	1	
- 3	25-80055- 3	• TUBE, REGULATOR TO QUICK DISCONNECT ANTI-BLACKOUT	1	
	25-60006- 1	SYSTEM INSTALLATION, PITOT, STATIC, TURN & BANK & ANTI-G PRESSURE COCKPIT, SEE FIG. 73-37 FOR NEXT HIGHER ASSY	REF	A-B
	25-60006-301	SYSTEM INSTALLATION, PITOT, STATIC, TURN & BANK & ANTI-G PRESSURE COCKPIT, SEE FIG. 73-37 FOR NEXT HIGHER ASSY	REF	C-F
- 4	AN837-4D	• ELBOW	2	
	AN960D716	• WASHER, USE WITH INDEX 4	2	
	AN364-720	• NUT, USE WITH INDEX 4	2	
- 5	25-60077- 17	• TUBE ASSY, STATIC	1	
- 6	AN832-4D	• UNION	1	
	AN364-720	• NUT, USE WITH INDEX 6	1	
- 7	25-60077- 15	• TUBE ASSY, PITOT	1	
- 8	25-60077- 19	• TUBE ASSY, ANTI-G PRESSURE	1	
- 9	25-60062- 1	• CONTROL ASSY, TURN & BANK DIFFERENTIAL PRESS.	1	A-B
	25-60062-301	• CONTROL ASSY, TURN & BANK DIFFERENTIAL PRESS.	1	C-F
		ATTACHING PARTS		
- 10	AN3-4A	• BOLT	2	
	AN960D10	• WASHER	2	
- 11	AN3-4A	• BOLT	1	
	AN960D10	• WASHER	1	
	AN364-1032	• NUT	1	
		¤----¤-¤-¤----¤		
- 12	25-60063- 3	• • BRACKET, TURN & BANK DIFFERENTIAL PRESSURE CONTROL	1	
- 13	25-60112- 3	• • CLIP, TURN & BANK DIFFERENTIAL PRESSURE CONTROL	1	
- 14	92482-0200	• • CONTROL, AIR PRESSURE (AIR)	1	
- 15	AN919-10D	• • REDUCER	1	
	AN901-8A	• • GASKET, USE WITH INDEX 15	1	
- 16	AN919-10D	• • REDUCER	1	A-B
	AN901-8A	• • GASKET, USE WITH INDEX 16	1	A-B
- 17	AN893-3D	• • BUSHING	1	C-F
	AN901-8A	• • GASKET, USE WITH INDEX 17	1	C-F
- 18	AN804D4	• • TEE	1	C-F
	AN901-4A	• • GASKET, USE WITH INDEX 18	1	C-F
	AN924-4D	• • NUT, USE WITH INDEX 18	1	C-F
- 19	25-60077- 9	• TUBE ASSY, ANTI-G PRESSURE	1	A-B
- 20	25-60077- 25	• TUBE ASSY, ANTI-G PRESSURE	1	C-F
- 21	25-60077- 23	• TUBE ASSY, AIRSTREAM DIRECTION TRANSDUCER	1	C-F
- 22	AN833-4D	• ELBOW	1	C-F
	AN960D716	• WASHER, USE WITH INDEX 22	1	C-F
	AN924-4D	• NUT, USE WITH INDEX 22	1	C-F
- 23	AN832-4D	• UNION, BULKHEAD	1	
	AN924-4D	• NUT, USE WITH INDEX 23	1	
- 24	25-60077- 11	• TUBE ASSY, ANTI-G PRESSURE	1	
- 25	AN815-4D	• UNION	1	
- 26	25-60077- 13	• TUBE ASSY, ANTI-G PRESSURE	1	

Forward Fuselage

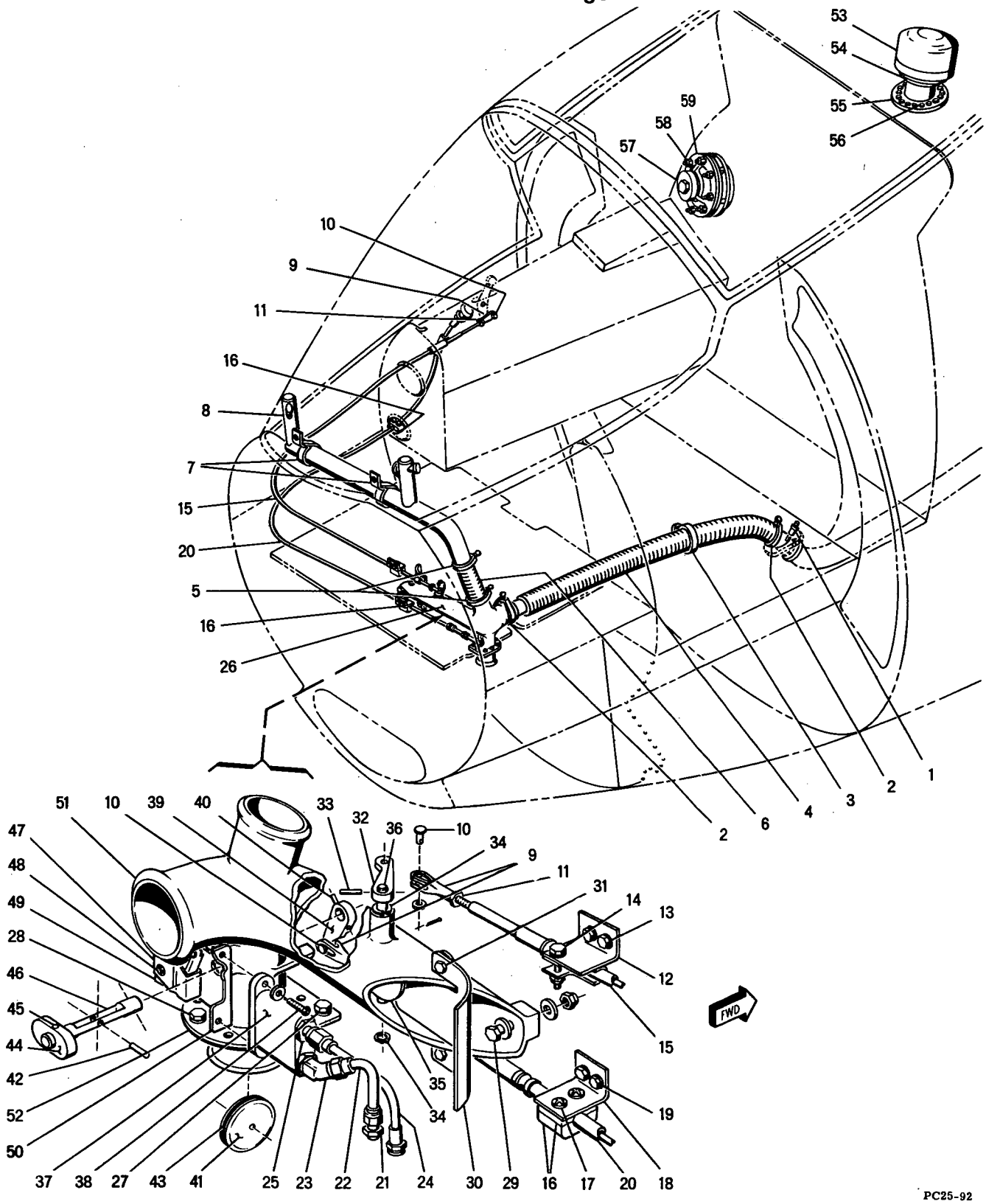

Figure 94 -- Cockpit Heat and Ventilation Equipment Installation

FIGURE & INDEX NUMBER	PART NUMBER	1 2 3 4 5 6 7 DESCRIPTION	UNITS PER ASS'Y	USABLE ON CODE
94 -	25-83016- 1	EQUIPMENT INSTL, COCKPIT HEAT & VENTILATION, SEE FIG. 73-52 FOR NEXT HIGHER ASSEMBLY	REF	
- 1	52B181-1	• THERMOSTAT, DUCT (VCH) MCDONNELL SPEC 25-76020-3	1	
	AN900-6	• GASKET, USE WITH INDEX 1	1	
- 2	AN737-91	• CLAMP	2	
- 3	AN742D46C	• CLAMP	1	
- 4	25-83091- 3	• DUCT, CABIN AIR INLET	1	
- 5	AN737-82	• CLAMP	2	
- 6	25-83096- 3	• DUCT, WINDSHIELD DEFOGGING	1	
- 7	AN742D32	• CLAMP	2	
- 8	25-83095- 1	• MANIFOLD ASSY, WINDSHIELD DEFOGGING DUCTS	1	
- 9	AN665-21R	• TERMINAL, CLEVIS	3	
		ATTACHING PARTS		
- 10	AN393-11	• PIN, FLAT HEAD	3	
	AN960D10L	• WASHER	3	
	AN380-2-2	• PIN, COTTER	3	
		¤----¤-¤-¤----¤		
- 11	AN345-10	• NUT	3	
- 12	25-83089- 1	• CLIP ASSEMBLY, CONTROL CABLE	1	
		ATTACHING PARTS		
- 13	AN3-7A	• BOLT	2	
	AN960D10L	• WASHER	2	
	AN960-10	• WASHER	2	
	AN364-1032	• NUT	2	
- 14	AN3-10A	• BOLT	1	
	AN960D10	• WASHER	1	
	AN364-1032	• NUT	1	
		¤----¤-¤-¤----¤		
- 15	SA3949-4	• CABLE ASSEMBLY (ACA) SELECTOR BUTTERFLY	1	
- 16	MT648	• MOUNTING (ARN)	4	
		ATTACHING PARTS		
- 17	NAS229-17	• SCREW	4	
	AN960D10L	• WASHER	8	
	AN364-1032	• NUT	4	
		¤----¤-¤-¤----¤		
- 18	25-83090- 3	• CLIP, CONTROL CABLE	1	
		ATTACHING PARTS		
- 19	AN3-7A	• BOLT	2	
	AN960D10L	• WASHER	2	
	AN960-10	• WASHER	2	
	AN364-1032	• NUT	2	
		¤----¤-¤-¤----¤		
- 20	F22229-1	• CONTROL ASSEMBLY (ARN) RAM AIR BUTTERFLY	1	
- 21	AN815-4D	• UNION	1	
	AN6290-4	• GASKET, USE WITH INDEX 21	2	
- 22	25-60077- 5	• TUBE ASSEMBLY, COCKPIT STATIC	1	
- 23	AN837-4D	• ELBOW	1	
	AN924-4D	• NUT, USE WITH INDEX 23	1	
	AN6290-4	• GASKET, USE WITH INDEX 23	1	
- 24	25-60077- 3	• TUBE ASSEMBLY, COCKPIT STATIC	1	
- 25	AN815-4D	• UNION	1	
	AN6290-4	• GASKET, USE WITH INDEX 25	1	
- 26	25-83019- 1	• HOUSING ASSY, CABIN AIR OUTLET	1	
		ATTACHING PARTS		
- 27	AN3-6A	• BOLT	4	
	AN960D10	• WASHER	8	
	AN364-1032	• NUT	4	
- 28	AN3-5A	• BOLT	6	
	AN960D10L	• WASHER	6	
	AN960D10	• WASHER	6	
	AN364-1032	• NUT	6	
- 29	AN3-13A	• BOLT	1	
	AN960D10L	• WASHER	1	
	AN960-10	• WASHER	1	
	AN364-1032	• NUT	1	
		¤----¤-¤-¤----¤		
- 30	25-83084- 3	• • BAFFLE, CABIN AIR OUTLET	1	
		ATTACHING PARTS		
- 31	AN3-4A	• • BOLT	2	
	AN960D10	• • WASHER	2	
	AN364-1032	• • NUT	2	
		¤----¤-¤-¤----¤		

FIGURE & INDEX NUMBER	PART NUMBER	1 2 3 4 5 6 7 DESCRIPTION	UNITS PER ASS'Y	USABLE ON CODE
94 - 32	25-83093- 3	• • ARM, CABIN AIR SELECTOR VALVE ACTUATING	1	
		ATTACHING PARTS		
- 33	79-022-094-0625	• • PIN, ROLL (EN)	1	
		¤----¤-¤-¤----¤		
- 34	NAS51-31	• • RING, EXTERNAL RETAINER	2	
- 35	25-83079- 3	• • BUTTERFLY, CABIN AIR OUTLET SELECTOR,	1	
- 36	25-83082- 3	• • SHAFT, CABIN AIR OUTLET SELECTOR BUTTERFLY	1	
- 37	22350	• • VALVE, DUMP (PC)	1	
		ATTACHING PARTS		
- 38	NAS229-9	• • SCREW	2	
	AN960D10L	• • WASHER	4	
	AN364-1032	• • NUT	2	
		¤----¤-¤-¤----¤		
- 39	25-83076- 3	• • ARM, CABIN AIR OUTLET	1	
		ATTACHING PARTS		
- 40	79-022-094-0750	• • PIN, ROLL (EN)	1	
		¤----¤-¤-¤----¤		
- 41	25-83078- 3	• • BUTTERFLY, EMERGENCY RAM AIR	1	
		ATTACHING PARTS		
- 42	79-028-125-0438	• • PIN, ROLL (EN)	1	
		¤----¤-¤-¤----¤		
- 43	AN6227B27	• • PACKING, O RING	1	
- 44	25-83080- 7	• • CAM, CABIN AIR OUTLET	1	
		ATTACHING PARTS		
- 45	79-022-094-0938	• • PIN, ROLL (EN)	1	
		¤----¤-¤-¤----¤		
- 46	25-83081- 3	• • SHAFT, EMERGENCY RAM AIR VALVE	1	
- 47	25-55054- 3	• • ACTUATOR, CABIN AIR OUTLET DUMP VALVE SWITCH, ALTERED FROM GOVERNMENT STANDARD PART NO. AN3169-1	1	
		ATTACHING PARTS		
- 48	AN515-6-18	• • SCREW	2	
	AN960D6L	• • WASHER	2	
	AN364-632	• • NUT	2	
		¤----¤-¤-¤----¤		
- 49	AN3210-1	• • SWITCH, CABIN AIR OUTLET DUMP VALVE	1	
- 50	25-83077- 3	• • BRACKET, CABIN AIR OUTLET	1	
		ATTACHING PARTS		
	AN509-10R7	• • SCREW	2	
	AN960D10L	• • WASHER	2	
	AN364-1032	• • NUT	2	
		¤----¤-¤-¤----¤		
- 51	25-83070- 3	• • HOUSING, CABIN AIR OUTLET	1	
- 52	25-83088- 3	• GASKET, CABIN AIR OUTLET	1	
- 53	513325	• REGULATOR, CABIN PRESSURE (PC) MCDONNELL SPEC 25-83024-1	1	
	25-83105- 3	• GASKET, CABIN PRESSURE REGULATOR, USE WITH INDEX 53	1	
- 54	15183-5.3125S	• CLAMP (MAR)	1	
- 55	25-83087- 5	• BASE, CABIN PRESSURE REGULATOR	1	
		ATTACHING PARTS		
- 56	AN3-5A	• BOLT	19	
	AN960D10	• WASHER	19	
		¤----¤-¤-¤----¤		
- 57	55000-5.25	• VALVE, CABIN SAFETY (PC) MCDONNELL SPEC 25-83015-1	1	
		ATTACHING PARTS		
- 58	AN364-1032	• NUT	8	
	AN960D10	• WASHER	8	
		¤----¤-¤-¤----¤		
- 59	19-82054- 3	• GASKET, CABIN PRESSURIZATION SAFETY VALVE SEALING	1	

FIGURE & INDEX NUMBER	PART NUMBER	1 2 3 4 5 6 7 DESCRIPTION	UNITS PER ASS'Y	USABLE ON CODE
95 -	25-76000- 1	EQUIPMENT INSTL, FORWARD FUSELAGE ELECTRICAL, SEE FIG. 44-5 FOR NEXT HIGHER ASSEMBLY	REF	A-B
	25-76000-301	EQUIPMENT INSTL, FORWARD FUSELAGE ELECTRICAL, SEE FIG. 44-5 FOR NEXT HIGHER ASSEMBLY	REF	C-F
- 1	NO NUMBER	• COMPUTER, MK 86 MOD 0, BUO-875604, GFP	1	
		ATTACHING PARTS		
	AN3-5A	• BOLT	8	
	AN960D10L	• WASHER	16	
		¤----¤-¤-¤----¤		
- 2	25-87005- 1	• RACK ASSEMBLY, MK 86 MOD 0 COMPUTER HINGED	1	
- 3	52-048-250-1250	• • PIN, ROLL (EN)	2	
- 4	25-87059- 3	• • PIN, RADAR COMPUTER RACK SHEAR	2	
- 5	25-87060- 3	• • SPRING, COMPUTER RACK SHEAR PIN RETAINING COMPRESSION	1	
- 6	25-87092- 5	• • PIN, COMPUTER RACK LATCH	1	
		ATTACHING PARTS		
- 7	AN23-35	• • BOLT, CLEVIS	1	
	AN960D10L	• • WASHER	2	
	AN320-3	• • NUT	1	
	AN380-2-2	• • PIN, COTTER	1	
		¤----¤-¤-¤----¤		
- 8	25-87091- 3	• • KNOB, COMPUTER RACK LATCH PIN	1	
- 9	25-87090- 3	• • SPRING, COMPUTER RACK LATCH PIN	1	
	25-89008- 3	• • NAMEPLATE, COMPUTER LATCH WARNING	1	
- 10	25-87080- 1	• • RACK ASSEMBLY, COMPUTER HINGED	1	
- 11	4M33P8-108	• • • BUSHING (MDA)	1	
- 12	4M34P8-100	• • • BUSHING (MDA)	2	
- 13	25-87106- 15	• ADAPTER ASSEMBLY, APQ50 RADAR COMPONENT	1	A-C
		ATTACHING PARTS		
	AN507-832R7	• SCREW	6	
	AN960D8	• WASHER	6	
	AN365-832	• NUT	6	
		¤----¤-¤-¤----¤		
	25-87106- 13	• ADAPTER ASSEMBLY, APQ50 RADAR COMPONENT	1	A-C
		ATTACHING PARTS		
	AN507-632R7	• SCREW	4	
	AN960D6	• WASHER	4	
	AN365-632	• NUT	4	
		¤----¤-¤-¤----¤		
- 14	2182-2	• • RECEPTACLE, STOWAGE (CED)	1	
	25-87106- 3	• ADAPTER ASSEMBLY, APQ50 RADAR COMPONENT	1	A-C
		ATTACHING PARTS		
	AN4-5A	• BOLT	4	
	AN960D416	• WASHER	4	
		¤----¤-¤-¤----¤		
- 15	2182-7	• • RECEPTACLE, STOWAGE (CED)	1	
- 16	2182-9	• • RECEPTACLE, STOWAGE (CED)	2	
- 17	AN832-4D	• • UNION	2	
	AN924-4D	• • NUT, USE WITH INDEX 17	2	
	AN929-4	• • CAP ASSEMBLY, USE WITH INDEX 17	2	
- 18	SLZ2020	• RELAY, ANGLE OF ATTACK (SLZ)	1	A-B
		ATTACHING PARTS		
	AN515-8R8	• SCREW	4	
	AN960D8L	• WASHER	4	
		¤----¤-¤-¤----¤		
- 19	NO NUMBER	• REGULATOR, MK 14 MOD 0 VOLTAGE, BUO-875416, GFP	1	A-B
		ATTACHING PARTS		
	AN510-10-16	• SCREW	4	
		¤----¤-¤-¤----¤		
- 20	NO NUMBER	• UNIT, MK 25 MOD 0 RANGE, GFP	1	C-F
		ATTACHING PARTS		
	NAS229-7	• SCREW	4	
	AN960D10L	• WASHER	4	
		¤----¤-¤-¤----¤		
- 21	45202	• TRANSDUCER, PRESSURE RATIO (AIR) MCDONNELL SPEC 25-60009-9	1	C-F
		ATTACHING PARTS		
	AN3-4A	• BOLT	4	
	AN960D10L	• WASHER	4	
		¤----¤-¤-¤----¤		

Forward Fuselage

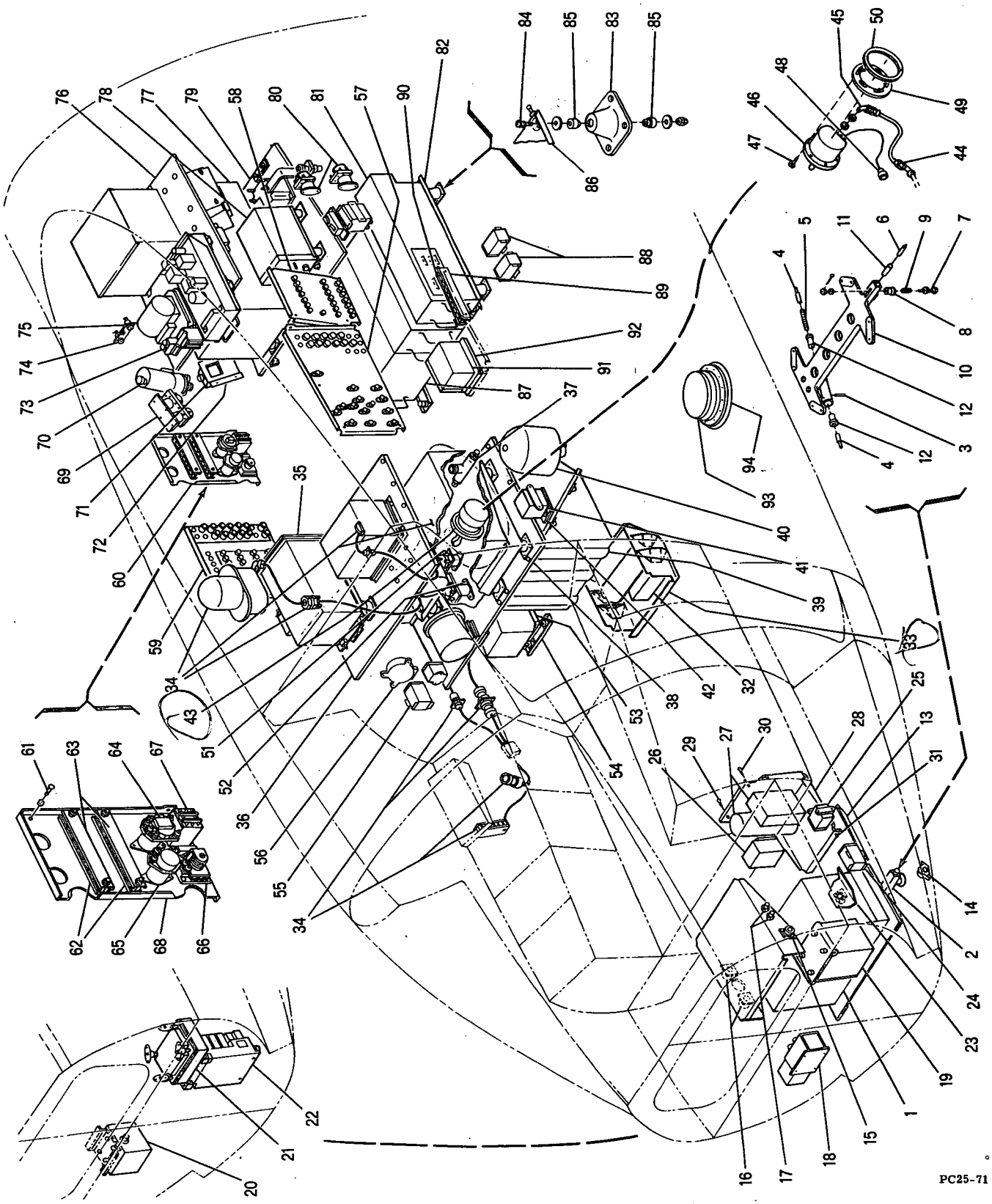

Figure 95 -- Forward Fuselage Electrical Equipment Installation

FIGURE & INDEX NUMBER	PART NUMBER	1 2 3 4 5 6 7 DESCRIPTION	UNITS PER ASS'Y	USABLE ON CODE
95 - 22	45210	• COMPUTER (AIR) MCDONNELL SPEC 25-60009-5	1	C-F
	25-87106- 5	• ADAPTER ASSEMBLY, APQ50 RADAR COMPONENT	1	A-C
		ATTACHING PARTS		
	AN515-8R4	• SCREW	2	
	AN960D8	• WASHER	2	
		¤----¤-¤-¤----¤		
- 23	2182-8	• • RECEPTACLE, STOWAGE (CED)	1	
- 24	AN3312-1	• RELAY, GUN SIGHT	1	
- 25	AN3311-1	• RELAY, WEAPON SELECTOR	1	
- 26	NO NUMBER	• POWER SUPPLY, MK 75 MOD 0, BUO-875696, GFP	1	
		ATTACHING PARTS		
	AN515-8R14	• SCREW	4	
	AN960D8L	• WASHER	4	
		¤----¤-¤-¤----¤		
- 27	E1617-1	• INVERTER, GFP	1	A-C
		ATTACHING PARTS		
	AN3-4A	• BOLT	4	
	AN960D10L	• WASHER	4	
		¤----¤-¤-¤----¤		
- 28	25-76095- 1	• COVER ASSEMBLY, INVERTER DUST	1	A-C
- 29	98292-2-.110	• • STUD (MKL) USE WITH 99947P.130 RECP (MKL)	1	A-C
	99836	• • PIN, CROSS (MKL)	1	A-C
- 30	98292-3-.260	• • STUD (MKL) USE WITH 99947P.130 RECP (MKL)	1	A-C
	99836	• • PIN, CROSS (MKL)	1	A-C
- 31	98292-1-.120	• • STUD (MKL) USE WITH 99947P.130 RECP (MKL)	2	A-C
	99836	• • PIN, CROSS (MKL)	2	A-C
- 32	E1617-1	• INVERTER, GFP	1	D-F
		ATTACHING PARTS		
	AN3-5A	• BOLT	4	
	AN960D10L	• WASHER	4	
		¤----¤-¤-¤----¤		
- 33	25-76128- 1	• COVER ASSY, INVERTER DUST	1	D-F
		ATTACHING PARTS		
	NAS229-7	• SCREW	4	
	AN960D10L	• WASHER	4	
		¤----¤-¤-¤----¤		
- 34	25-87028- 1	• EQUIPMENT INSTALLATION, AN/ARN6 RADIO, SEE FIG. 98	1	A-B
	25-87028-301	• EQUIPMENT INSTALLATION, AN/ARN6 RADIO, SEE FIG. 98	1	C-F
- 35	674225	• AMPLIFIER, ENGINE TEMPERATURE CONTROL, GFP	1	C-F
- 36	25-87011- 1	• EQUIPMENT INSTALLATION, FWD SHELF ELECTRICAL, SEE FIG. 99	1	A-B
	25-87011-301	• EQUIPMENT INSTALLATION, FWD SHELF ELECTRICAL, SEE FIG. 99	1	C
- 37	4021	• CONNECTOR, TEE MATCH R-F (COID)	1	A
- 38	25-87010- 1	• EQUIPMENT INSTALLATION, FWD SHELF ELECTRICAL SEE FIG. 99	1	
- 39	25-76018- 1	• BATTERY INSTL, FWD FUSELAGE, SEE FIG. 96	1	
- 40	R88U0198-005-000	• GYRO, VERTICAL G3, 143D192P1 (GE) GFP	1	
		ATTACHING PARTS		
	AN500A516-7	• SCREW	3	
	AN960D516L	• WASHER	3	
		¤----¤-¤-¤----¤		
- 41	AN3311-1	• RELAY, RMI SLAVING	1	
- 42	25-76144- 3	• SPACER, RMI SLAVING RELAY	1	
	25-76097- 1	• TRANSMITTER INSTALLATION, ANGLE OF ATTACK	1	A-B
- 43	SLZ2018	• • DETECTOR, TYPE L50 (SLZ)	1	A-B
		ATTACHING PARTS		
	25-76098- 3	• • CLAMP, AIRSTREAM DIRECTION DETECTOR RETAINING	3	
	AN3-6A	• • BOLT	3	
	AN960-10L	• • WASHER	3	
		¤----¤-¤-¤----¤		
	25-76135- 1	• TRANSDUCER INSTL, ANGLE OF ATTACK	1	C-F
- 44	AN6270-4-32	• • HOSE ASSEMBLY	1	C-F
- 45	AN837-4D	• • ELBOW	1	C-F
	AN924-4D	• • NUT, USE WITH INDEX 45	1	C-F
	AN901-4A	• • GASKET, USE WITH INDEX 45	1	C-F
- 46	45204	• • TRANSDUCER, AIRSTREAM DIRECTION (AIR) MCDONNELL SPEC 25-60009-3	1	C-F

FIGURE & INDEX NUMBER	PART NUMBER	1 2 3 4 5 6 7 DESCRIPTION	UNITS PER ASS'Y	USABLE ON CODE
95 -		ATTACHING PARTS		
- 47	AN509-10R16	. . SCREW	6	
		¤----¤-¤-¤----¤		
- 48	AN3106M20-33P	. . . PLUG, USE WITH MS29513-20 O RING	1	C-F
- 49	25-76131-301	. . PLATE ASSY, ANGLE OF ATTACK MOUNTING	1	C-F
- 50	RR525C	. . RING (RMS)	1	C-F
- 51	AN3353-1	. RELAY, UTILITY BUS	1	
- 52	AN3370-2	. RELAY, BATTERY	1	
- 53	R88A0211-000-000	. ADAPTER, G2 COMPASS, GFP	1	
- 54	R88R0060-000-000	. RACK, MOUNTING, GFP	1	
		ATTACHING PARTS		
	NAS229-10	. SCREW	7	
	AN960D10L	. WASHER	7	
		¤----¤-¤-¤----¤		
- 55	AN3312-1	. RELAY, APPROACH LIGHTS	1	
- 56	7400-1	. SWITCH, AIRSPEED PRESSURE (ESSX) MCDONNELL SPEC 25-76016-1	1	
		ATTACHING PARTS		
	NAS229-16	. SCREW	3	
	AN960D10L	. WASHER	3	
		¤----¤-¤-¤----¤		
- 57	25-76113-301	. PANEL ASSY, EQUIP. COMPARTMENT LEFT SIDE FUSE & RELAY, SEE FIG. 97	1	A-C
		ATTACHING PARTS		
	AN515-8R6	. SCREW	6	
	AN960D8	. WASHER	6	
		¤----¤-¤-¤----¤		
- 58	25-76059-301	. PANEL ASSY, EQUIP. COMPT LEFT SIDE CIRCUIT BREAKER, SEE FIG. 97	1	A-C
		ATTACHING PARTS		
	AN515-8R14	. SCREW, UPPER	1	
	AN960D8L	. WASHER	1	
	AN515-8R7	. SCREW, LOWER	1	
	AN960D8L	. WASHER	1	
		¤----¤-¤-¤----¤		
- 59	25-76061-305	. PANEL ASSY, EQUIP. COMPT RIGHT SIDE FUSE & CIRCUIT BREAKER, SEE FIG. 97	1	A-B
	25-76061-307	. PANEL ASSY, EQUIP. COMPT RIGHT SIDE FUSE & CIRCUIT BREAKER, SEE FIG. 97	1	C
		ATTACHING PARTS		
	NAS229-10	. SCREW	4	
	AN960D10	. WASHER	4	
		¤----¤-¤-¤----¤		
- 60	25-76072- 1	. PANEL ASSEMBLY, EQUIPMENT COMPARTMENT RELAY	1	
		ATTACHING PARTS		
- 61	NAS229-9	. SCREW	6	
	AN960D10	. WASHER	6	
		¤----¤-¤-¤----¤		
- 62	5M7-10-8	. . PANEL ASSEMBLY, ELECTRICAL CONNECTOR, (MDA)	2	
- 63	5M8-10-8	. . COVER, PANEL ASSEMBLY (MDA)	2	
- 64	AN3352-1	. . RELAY, A-C D-C MONITORING D-C BUS	1	
- 65	AN3350-2	. . RELAY, SECONDARY D-C BUS	1	
- 66	9565H5	. . RELAY, PRIMARY A-C BUS (CUT)	1	
		ATTACHING PARTS		
	NAS229-10	SCREW	4	
		¤----¤-¤-¤----¤		
- 67	AN3311-1	. . RELAY, GUN FIRE POWER	1	
- 68	25-76055- 1	. . BASE ASSEMBLY, EQUIPMENT COMPARTMENT RELAY	1	
- 69	AN3354-1	. RELAY, CANOPY POWER	1	
- 70	52101-1	. SWITCH, COAXIAL (GE) 52A3A101 (BUA)	1	
		ATTACHING PARTS		
	AN3H3A	. BOLT	4	
	AN960D10	. WASHER	4	
		¤----¤-¤-¤----¤		
- 71	RE120/ARA25	. RELAY, SOLENOID, GFP	1	
- 72	MT1042/ARA25	. BASE, MOUNTING, GFP	1	
		ATTACHING PARTS		
	AN515-8R6	. SCREW	4	
	AN960D8L	. WASHER	4	
		¤----¤-¤-¤----¤		

FIGURE & INDEX NUMBER	PART NUMBER	1 2 3 4 5 6 7 DESCRIPTION	UNITS PER ASS'Y	USABLE ON CODE
95 - 73	AN3311-1	• RELAY, CANOPY SEAL	1	
- 74	AN3249-1	• JACK, RED TIP VOLTMETER TEST	1	
- 75	AN3249-2	• JACK, BLACK TIP VOLTMETER TEST	1	
- 76	25-87009- 1	• EQUIPMENT INSTALLATION, AFT SHELF ELECTRICAL, SEE FIG. 100	1	
- 77	RT178/ARC27	• RECEIVER/TRANSMITTER, GFP	1	
- 78	AM608/ARA25	• AMPLIFIER, ELECTRONIC CONTROL, GFP	1	
- 79	25-87008- 1	• EQUIPMENT INSTALLATION, AFT SHELF ELECTRICAL, SEE FIG. 100	1	
- 80	AN3352-1	• RELAY, AMMUNITION BOOSTER	2	
- 81	AM291/APN22	• AMPLIFIER, RADAR, E3037(BUA) GFP	1	
- 82	25-87022- 1	• MOUNT ASSEMBLY, APN22 MODIFIED	1	
		ATTACHING PARTS		
	AN3-4A	• BOLT	8	
	AN960D10L	• WASHER	8	
		¤----¤-¤-¤----¤		
- 83	25-87083- 3	• • ADAPTER, LARGE SHOCK MOUNT REPLACEMENT	4	
		ATTACHING PARTS		
- 84	NAS230-17	• • SCREW	4	
	AN960D416L	• • WASHER	4	
	4M36-02034	• • WASHER (MDA)	8	
	AN364-428	• • NUT	4	
- 85	AB401	• • BUSHING (CRPI)	8	
		¤----¤-¤-¤----¤		
- 86	MT803/APN22	• • MOUNTING, GFP	1	
- 87	R88A0554-045-000	• AMPLIFIER, GFP, 519E840G1 (GE)	1	
		ATTACHING PARTS		
	AN4-6A	• BOLT	3	
	AN960D416L	• WASHER	3	
	25-87086- 3	• SPACER, CONTROL AMPLIFIER SUPPORT	3	
		¤----¤-¤-¤----¤		
- 88	AN3312-1	• RELAY, STABILATOR MANUAL FEEL TRIM	2	
- 89	25-76115- 1	• PLATE ASSEMBLY, TERMINAL NUMBERING	1	
- 90	5M7-10-10	• PANEL ASSEMBLY, ELECTRICAL CONNECTOR (MDA)	1	
	5M8-10-10	• COVER, PANEL ASSEMBLY (MDA) USE WITH INDEX 90	1	
	AN3433-4-2	• BUS BAR, USE WITH INDEX 90	1	
- 91	53C159	• REGULATOR, CABIN TEMPERATURE CONTROL SYSTEM, (VCH) MCDONNELL SPEC 25-76020-1	1	
- 92	50C404	• BASE, CABIN TEMPERATURE CONTROL REGULATOR MOUNTING (VCH) MCDONNELL SPEC 25-76020-5	1	
		ATTACHING PARTS		
	NAS229-6	• SCREW	4	
	AN960D10L	• WASHER	8	
	AN364-1032	• NUT	4	
		¤----¤-¤-¤----¤		
- 93	AT234/APX	• ANTENNA (CFM)	1	B-F
		ATTACHING PARTS		
	AN507-832R12	• SCREW	12	
		¤----¤-¤-¤----¤		
	UG212A/U	• ADAPTER, USE WITH AT234/APX ANTENNA	1	B-F
- 94	25-46151- 3	• WINDOW, AT234/APX ANTENNA	1	B-F

Forward Fuselage

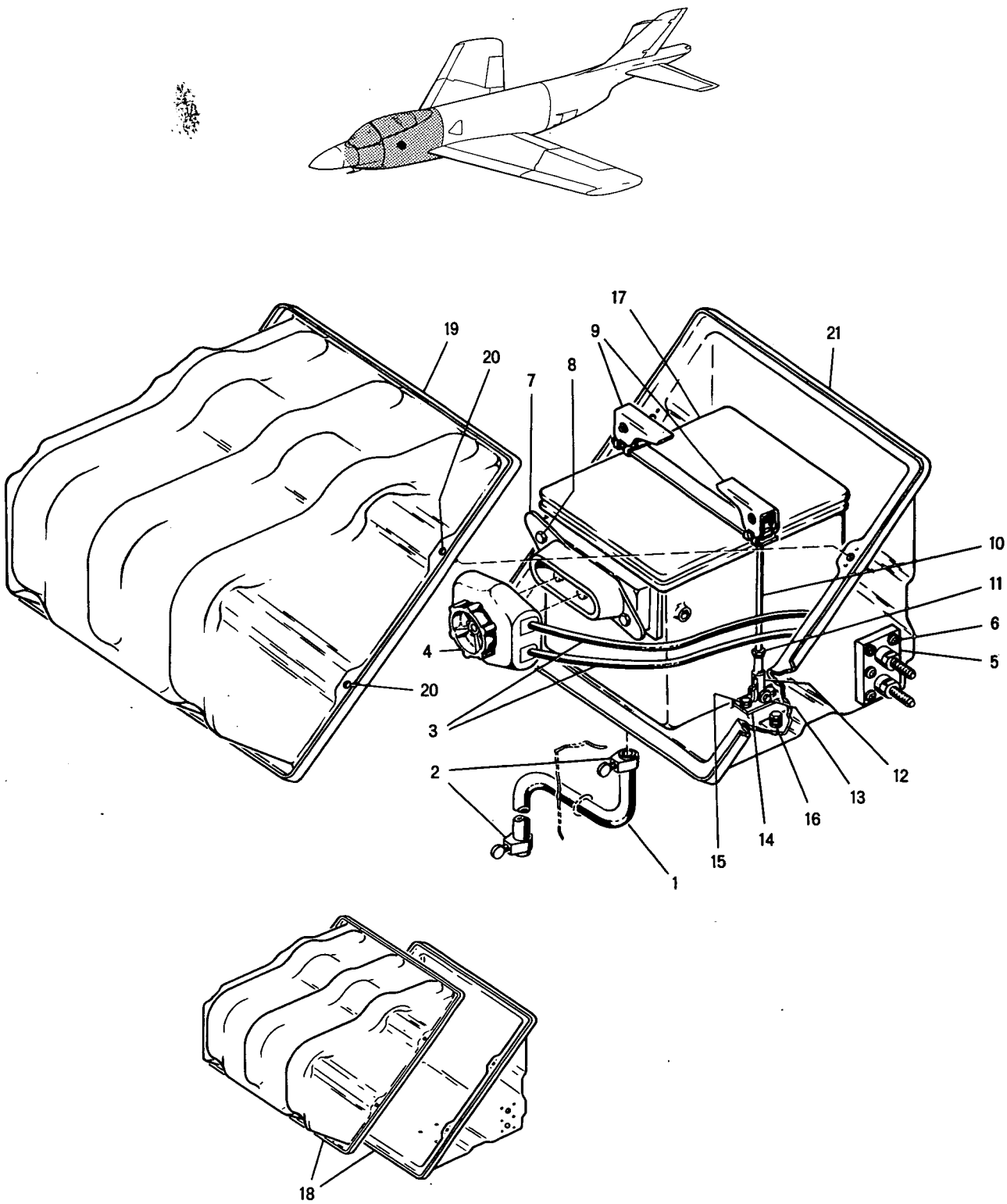

Figure 96 -- Forward Fuselage Battery Installation

FIGURE & INDEX NUMBER	PART NUMBER	1 2 3 4 5 6 7 DESCRIPTION	UNITS PER ASS'Y	USABLE ON CODE
96 -	25-76018- 1	BATTERY INSTL, FORWARD FUSELAGE, SEE FIG. 95-39 FOR NEXT HIGHER ASSEMBLY	REF	
- 1	25-76018- 3	. DRAIN	1	
- 2	AN737-26	. CLAMP	2	
- 3	25-79000-A167	. BUNDLE ASSEMBLY, WIRE	1	
- 4	51A1B23	. . PLUG, BATTERY (BUA)	1	
	GC73T	. . TERMINAL (TOM)	2	
	GC72T	. . TERMINAL (TOM)	2	
	AN365B624	. NUT	2	
	AN961-616	. WASHER	2	
- 5	P28375XA	. STUD ASSEMBLY (JOMI)	1	
		ATTACHING PARTS		
- 6	NAS229-16	. SCREW	6	
	AN960D10	. WASHER	12	
	AN364-1032	. NUT	6	
		¤----¤-¤-¤----¤		
- 7	E1967	. ADAPTER (BUA)	1	
		ATTACHING PARTS		
- 8	NAS501-3H6A	. BOLT	2	
	AN960-10L	. WASHER	2	
		¤----¤-¤-¤----¤		
- 9	AN3156-3	. CLAMP	2	
- 10	23-78082- 3	. ROD, BATTERY TIE DOWN	2	
- 11	AN316-4R	. NUT	2	
- 12	AN486-1	. CLEVIS, ROD END	2	
		ATTACHING PARTS		
- 13	AN394-17	. PIN, FLAT HEAD	2	
	AN380-2-2	. PIN, COTTER	2	
		¤----¤-¤-¤----¤		
- 14	25-76088- 3	. CLIP, BATTERY HOLD DOWN ROD ATTACHING	2	
- 15	AN4-12	. BOLT	4	
	AN960D416	. WASHER	4	
- 16	AN4-12	. BOLT	2	
	AN960D416	. WASHER	10	
- 17	AN3151-2	. BATTERY, GFP, ALTERNATE AN3150-2 GFP, LESS TERMINAL BOX & WING NUTS	1	
- 18	25-76089- 1	. BOX ASSEMBLY, BATTERY	1	
- 19	25-76089- 5	. . COVER ASSEMBLY	1	
- 20	NU-V5-3/46	. . . STUD (NGE) USE WITH 99833P.130 RECP (MKL)	4	
- 21	25-76089- 3	. . SHELL ASSEMBLY	1	

Forward Fuselage

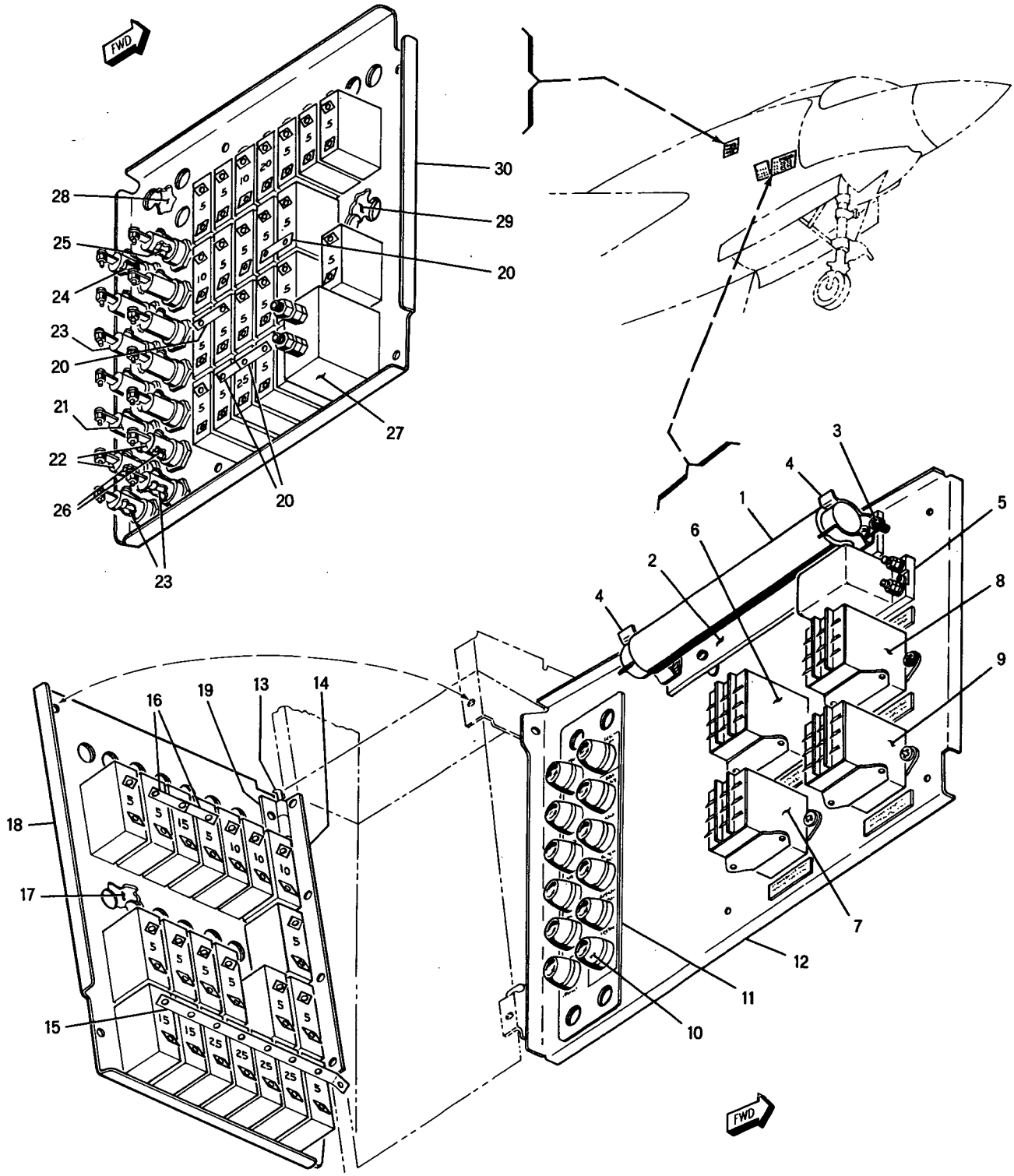

PC25-74

Figure 97 -- Left and Right Equipment Compartment Fuse, Circuit Breaker, and Relay Panel Assemblies

FIGURE & INDEX NUMBER	PART NUMBER	1 2 3 4 5 6 7 DESCRIPTION	UNITS PER ASS'Y	USABLE ON CODE
97 -	25-76113-301	PANEL ASSY, EQUIPMENT COMPARTMENT LEFT SIDE FUSE & RELAY, SEE FIG. 95-57 FOR NEXT HIGHER ASSEMBLY	REF	A-C
- 1	RW11G2R0	• RESISTOR	1	
- 2	19-78193- 1	• BASE ASSEMBLY, RESISTOR MOUNTING	1	
- 3	143002	• • TERMINAL (LTF)	2	
- 4	15-78085- 3	• • CLIP, RESISTOR	2	
	25-89017-105	• NAMEPLATE, ARMAMENT SAFETY RESISTOR	1	
- 5	AN3320-1	• RELAY, ARMAMENT MASTER	1	
	25-89017- 93	• NAMEPLATE, ARMAMENT MASTER RELAY	1	
- 6	AN3311-1	• RELAY, NOZZLE WARNING LIGHT	1	A-C
	25-89053- 3	• NAMEPLATE, NOZZLE WARNING LIGHT	1	A-C
- 7	AN3311-1	• RELAY, FUSELAGE LIGHT KEYING	1	
	25-89017-117	• NAMEPLATE, FUSELAGE LIGHT KEYING RELAY	1	
- 8	AN3311-1	• RELAY, ARMAMENT SAFETY DISABLING	1	
	25-89017- 95	• NAMEPLATE, ARMAMENT SAFETY DISABLE RELAY	1	
- 9	AN3311-1	• RELAY, GUN FIRING	1	
	25-89017- 77	• NAMEPLATE, GUN FIRING RELAY	1	
- 10	HCM	• HOLDER, FUSE (BUS)	12	
	AGS1	• FUSE (BUS) USE WITH INDEX 10	12	
- 11	25-89015- 21	• NAMEPLATE, EQUIPMENT COMPARTMENT FUSE PANEL	1	A-C
- 12	25-76112- 1	• PANEL ASSY, EQUIP. COMPARTMENT LEFT SIDE FUSE & RELAY MTG	1	A-B
	25-76059-301	PANEL ASSY, EQUIPMENT COMPARTMENT LEFT SIDE CIRCUIT BREAKER, SEE FIG. 95-58 FOR NEXT HIGHER ASSEMBLY	REF	A-C
- 13	AN253-2-978	• PIN, HINGE	1	
- 14	25-76059- 3	• HINGE, HALF, ALTERED FROM GOVERNMENT STANDARD PART NO. AN257HP3-1000	1	
- 15	25-76081- 3	• BUS BAR, CIRCUIT BREAKER	1	
- 16	5M9-032-2	• BUS BAR (MDA)	2	
	MS25005-10	• CIRCUIT BREAKER	3	
	MS25005-5	• CIRCUIT BREAKER	11	
	MS25005-25	• CIRCUIT BREAKER	4	
	MS25005-15	• CIRCUIT BREAKER	3	
- 17	25-89016- 19	• NAMEPLATE, EQUIPMENT COMPARTMENT CIRCUIT BREAKER PANEL	1	
- 18	25-76060- 1	• PANEL ASSEMBLY, CIRCUIT BREAKER MOUNTING	1	
- 19	25-76060- 5	• • HINGE, HALF, ALTERED FROM GOVERNMENT STANDARD PART NO. AN257HP4-1000	1	
	25-76061-305	PANEL ASSY, EQUIPMENT COMPARTMENT RIGHT SIDE FUSE & CIRCUIT BREAKER, SEE FIG. 95-59 FOR NEXT HIGHER ASSEMBLY	REF	A-B
	25-76061-307	PANEL ASSY, EQUIPMENT COMPARTMENT RIGHT SIDE FUSE & CIRCUIT BREAKER, SEE FIG. 95-59 FOR NEXT HIGHER ASSEMBLY	REF	C
- 20	5M9-032-2	• BUS BAR (MDA)	4	
- 21	HCM	• HOLDER, FUSE (BUS)	12	
- 22	HCM	• HOLDER, FUSE (BUS)	2	C-F
- 23	413001	• FUSE, SLO BLO (LTF)	3	
- 24	AGS2	• FUSE (BUS)	1	
- 25	AGS1	• FUSE (BUS)	8	
- 26	AGS1	• FUSE (BUS)	2	C-F
	MS25005-5	• CIRCUIT BREAKER	18	
	MS25005-10	• CIRCUIT BREAKER	2	
	MS25005-20	• CIRCUIT BREAKER	1	
	MS25005-25	• CIRCUIT BREAKER	1	
- 27	9300-80B	• CIRCUIT BREAKER (SQ)	1	
- 28	25-89015- 17	• NAMEPLATE, EQUIPMENT COMPARTMENT FUSE PANEL	1	A-B
	25-89015- 23	• NAMEPLATE, EQUIPMENT COMPARTMENT FUSE PANEL	1	
- 29	25-89016- 17	• NAMEPLATE, EQUIPMENT COMPARTMENT CIRCUIT BREAKER PANEL	1	
- 30	25-76062- 7	• PANEL, RIGHT SIDE FUSE & CIRCUIT BREAKER MOUNTING	1	

Forward Fuselage

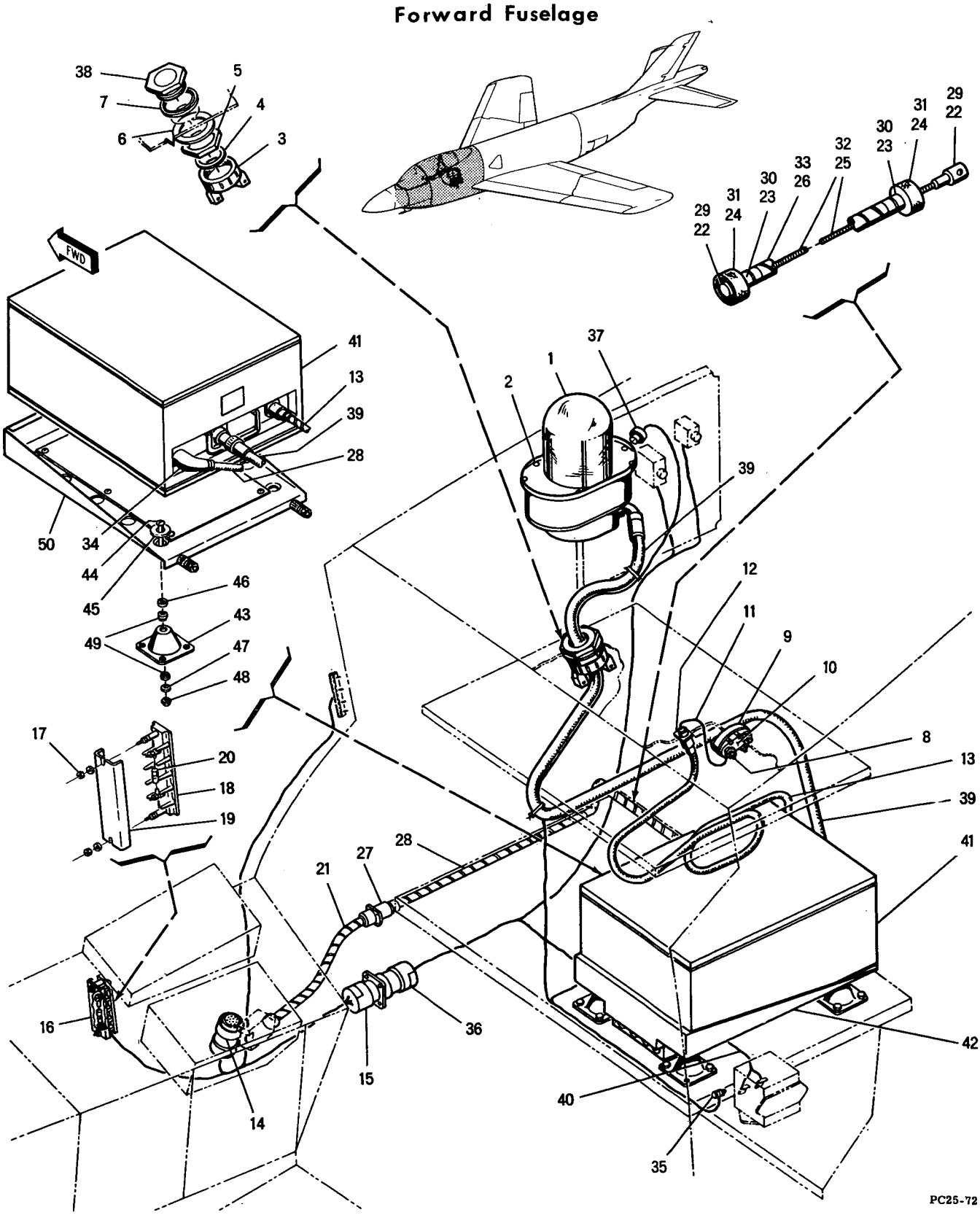

Figure 98 -- AN/ARN-6 Radio Equipment Installation

FIGURE & INDEX NUMBER	PART NUMBER	1 2 3 4 5 6 7 DESCRIPTION	UNITS PER ASS'Y	USABLE ON CODE
98 -	25-87028- 1	EQUIPMENT INSTL, AN/ARN6 RADIO, SEE FIG. 95-34 FOR NEXT HIGHER ASSEMBLY	REF	A-B
	25-87028-301	EQUIPMENT INSTL, AN/ARN6 RADIO, SEE FIG. 95-34 FOR NEXT HIGHER ASSEMBLY	REF	C-F
- 1	AS313/ARN6	• ANTENNA, LOOP, GFP	1	
		ATTACHING PARTS		
- 2	NAS229-8	• SCREW	10	
		¤----¤-¤-¤----¤		
- 3	AN3057-20A	• ADAPTER	1	
- 4	4M36-11006	• WASHER (MDA)	1	
- 5	AN3066-20	• NUT, LOCK	1	
- 6	4M36-16003	• WASHER (MDA)	1	
- 7	920AL900-28	• SEAL (JM)	1	
	25-76094- 1	• CONTACT ASSEMBLY, ARN6 SENSE ANTENNA	1	
		ATTACHING PARTS		
	AN3-16A	• BOLT	2	
	AN960D10L	• WASHER	2	
	AN364-1032	• NUT	2	
		¤----¤-¤-¤----¤		
- 8	AN3432-10-20	• • STUD, ELECTRICAL TERMINAL BLOCK	2	
	AN961-10	• • WASHER	4	
	AN364-1032	• • NUT	2	
- 9	25-76099- 3	• • STRIP, ANTENNA	1	
- 10	25-76100- 3	• • BLOCK, ANTENNA CONTACT MOUNTING	1	
- 11	15-87067- 1	• CABLE ASSEMBLY, CANOPY ANTENNA LEAD IN	1	
- 12	49194	• • RECEPTACLE (NAVY)	1	
- 13	CG405/ARN6	• CABLE ASSEMBLY	1	
	25-87028- 3	• BUNDLE ASSEMBLY, WIRE	1	A-B
	25-87028- 15	• BUNDLE ASSEMBLY, WIRE	1	C-F
- 14	3106BS28-12SW	• • PLUG,(CED) RADIO COMPASS CONTROL PANEL, ALTERNATE AN3106-28-12S, USE WITH MS29513-14 O RING	1	
- 15	AN3100M28-12PW	• • RECEPTACLE, RADIO COMPASS SYSTEM	1	
- 16	25-87028- 9	• RESISTOR ASSEMBLY	1	
		ATTACHING PARTS		
	AN515-4R14	• SCREW	2	
	19-78046- 3	• SPACER, RESISTOR MOUNTING BASE	2	
		¤----¤-¤-¤----¤		
- 17	AN364-1032	• • NUT	2	
	AN960D10L	• • WASHER	2	
- 18	5M7-10-4	• • PANEL ASSEMBLY, ELECTRICAL CONNECTOR (MDA)	1	
- 19	5M8-10-4	• • COVER, PANEL ASSEMBLY (MDA)	1	
	AN364-1032	• • NUT	2	
	AN961-10	• • WASHER	2	
- 20	RC20GE201J	• • RESISTOR	1	
- 21	25-87094- 1	• SHAFT ASSEMBLY, AN/ARN6 RADIO TUNING	1	A-B
	25-87094- 17	• SHAFT ASSEMBLY, AN/ARN6 RADIO TUNING	1	C-F
- 22	SK1125	• • SPLINE (SFW)	2	
- 23	SK1091	• • FERRULE (SFW)	2	
- 24	SK1086	• • NUT (SFW)	2	
- 25	25-87094- 5	• • SHAFT, FLEX, SELECTED FROM 6732 (SFW) 11.10 IN. LONG	1	A-B
	25-87094- 15	• • SHAFT, FLEX, SELECTED FROM 6732 (SFW) 24.50 IN. LONG	1	C-F
- 26	25-87094- 9	• • CASING, SELECTED FROM 6772 (SFW) 10.24 IN. LONG	1	A-B
	25-87094- 13	• • CASING, SELECTED FROM 6772 (SFW) 24.07 IN. LONG	1	C-F
- 27	A5495X	• FITTING, BULKHEAD (WD)	1	
		ATTACHING PARTS		
	AN515-8R10	• SCREW	4	
	AN960D8L	• WASHER	8	
	AN365-832	• NUT	4	
		¤----¤-¤-¤----¤		
- 28	25-87094- 3	• SHAFT ASSEMBLY, AN/ARN6 RADIO TUNING	1	
- 29	SK1125	• • SPLINE (SFW)	2	
- 30	SK1091	• • FERRULE (SFW)	2	
- 31	SK1086	• • NUT (SFW)	2	
- 32	25-87094- 7	• • SHAFT, FLEX, SELECTED FROM 6737 (SFW) 48.00 IN. LONG	1	
- 33	25-87094- 11	• • CASING, SELECTED FROM 6772 (SFW) 48.30 IN. LONG	1	
- 34	9100F	• COUPLING, RIGHT ANGLE (SFW)	1	
- 35	AN3-4A	• BOLT	1	
	AN961-10	• WASHER	1	
	AN365-1032	• NUT	1	

FIGURE & INDEX NUMBER	PART NUMBER	1 2 3 4 5 6 7 DESCRIPTION	UNITS PER ASS'Y	USABLE ON CODE
98 -	25-87028- 11	• BUNDLE ASSEMBLY, WIRE	1	
- 36	AN3106M28-12SW	• • PLUG, RADIO COMPASS SYSTEM, USE WITH MS29513-28 O RING	1	
	25-87028- 13	• BUNDLE ASSEMBLY, WIRE	1	
- 37	3106BS16S1S	• • PLUG (CED) LOOP ANTENNA, ALTERNATE AN3108-16S1S, USE WITH MS29513-16 O RING	1	
- 38	AN3064-20	• • CONNECTOR	1	
- 39	CG131/ARN6	• • CABLE ASSEMBLY	1	
- 40	25-87028- 7	• BUNDLE ASSEMBLY, WIRE	1	
- 41	R101/ARN6	• UNIT, COMPASS, GFP	1	
- 42	25-87017- 1	• MOUNT ASSEMBLY, ARN6 MODIFIED	1	
- 43	25-87083- 3	• • ADAPTER, LARGE SHOCK MOUNT REPLACEMENT	4	
		ATTACHING PARTS		
- 44	AN24-18A	• • BOLT	4	
- 45	AN960D416L	• • WASHER	4	
- 46	25-87100- 3	• • SPACER, ARN6 MTG	4	
- 47	4M36-02034	• • WASHER (MDA)	4	
- 48	AN364-428	• • NUT	4	
		¤----¤-¤-¤----¤		
- 49	AB401SB	• • BUSHING (CRPI)	8	
- 50	MT274/ARN6	• • MOUNTING, GFP	1	

FIGURE & INDEX NUMBER	PART NUMBER	1 2 3 4 5 6 7 DESCRIPTION	UNITS PER ASS'Y	USABLE ON CODE
99 -	25-87010- 1	EQUIPMENT INSTALLATION, FORWARD SHELF ELECTRICAL, SEE FIG. 95-38 FOR NEXT HIGHER ASSY	REF	
- 1	25-87016- 1	• MOUNT ASSY, APX6 MOD	1	
		ATTACHING PARTS		
- 2	AN3-12A	• BOLT	14	
	AN960D10L	• WASHER	14	
	4M36-01015	• WASHER (MDA)	14	
	AN364-1032	• NUT	14	
- 3	AN3-13A	• BOLT	2	
	AN960D10L	• WASHER	2	
	4M36-01015	• WASHER (MDA)	2	
	AN364-1032	• NUT	2	
		¤----¤-¤-¤----¤		
- 4	25-87083- 3	• • ADAPTER, LARGE SHOCK MOUNT REPLACEMENT	4	
		ATTACHING PARTS		
- 5	NAS230-17	• • SCREW	4	
	AN960D416L	• • WASHER	4	
	4M36-02034	• • WASHER (MDA)	8	
	AB401	• • BUSHING (CRPI)	8	
	AN364-428	• • NUT	4	
		¤----¤-¤-¤----¤		
	MT362/APX6	• • BASE, MTG, GFP	1	
- 6	AN3311-1	• RELAY, HOOK BY-PASS	1	
		ATTACHING PARTS		
- 7	AN515-8R18	• SCREW	2	
	AN960D8L	• WASHER	4	
	AN364-832	• NUT	2	
		¤----¤-¤-¤----¤		
- 8	R88C1333-105-000	• UNIT, GAIN CONTROL, 141D219G4 (GE) GFP	1	
		ATTACHING PARTS		
- 9	AN3-14A	• BOLT, FWD	2	
	AN960D10L	• WASHER	2	
	AN960D10	• WASHER	2	
	AN364-1032	• NUT	2	
	AN3-12A	• BOLT, AFT	2	
	AN960D10L	• WASHER	2	
	4M36-01015	• WASHER (MDA)	2	
	AN960D10	• WASHER	2	
	AN364-1032	• NUT	2	
		¤----¤-¤-¤----¤		
- 10	AN3436-4-1	• BLOCK ASSY, TERMINAL	1	
- 11	5M7-10-10	• PANEL ASSEMBLY, ELECTRICAL CONNECTOR (MDA)	1	
- 12	5M8-10-10	• COVER, PANEL ASSEMBLY (MDA)	1	
- 13	3300	• UNIT, FLASHER (SEAE)	1	
		ATTACHING PARTS		
- 14	AN3-13A	• BOLT	4	
	4M36-01015	• WASHER (MDA)	4	
	AN960D10	• WASHER	4	
	AN364-1032	• NUT	4	
		¤----¤-¤-¤----¤		
- 15	25-87014- 1	• SHELF ASSY, EQUIPMENT	1	
		ATTACHING PARTS		
- 16	AN3-14A	• BOLT	6	
	AN960D10L	• WASHER	12	
	AN364-1032	• NUT	6	
- 17	AN3-13A	• BOLT	4	
	4M36-01015	• WASHER (MDA)	4	
	AN960D10L	• WASHER	4	
	AN364-1032	• NUT	4	
		¤----¤-¤-¤----¤		
	25-87011- 1	EQUIPMENT INSTALLATION, FORWARD SHELF ELECTRICAL, SEE FIG. 95-36 FOR NEXT HIGHER ASSY	REF	A-B
	25-87011-301	EQUIPMENT INSTALLATION, FORWARD SHELF ELECTRICAL, SEE FIG. 95-36 FOR NEXT HIGHER ASSY	1	C
- 18	70G175	• TRANSFORMER, 26V INSTRUMENT (GE)	1	
		ATTACHING PARTS		
- 19	AN3-4A	• BOLT	2	
	AN960D10L	• WASHER	2	
		¤----¤-¤-¤----¤		
- 20	25-76136- 1	• SUPPORT ASSY, INSTRUMENT TRANSFORMER	1	
	25-76110- 1	• TRANSFORMER ASSEMBLY, POWER	1	
		ATTACHING PARTS		
- 21	AN500A8-5	• SCREW	4	
	AN960D8L	• WASHER	4	
		¤----¤-¤-¤----¤		

Forward Fuselage

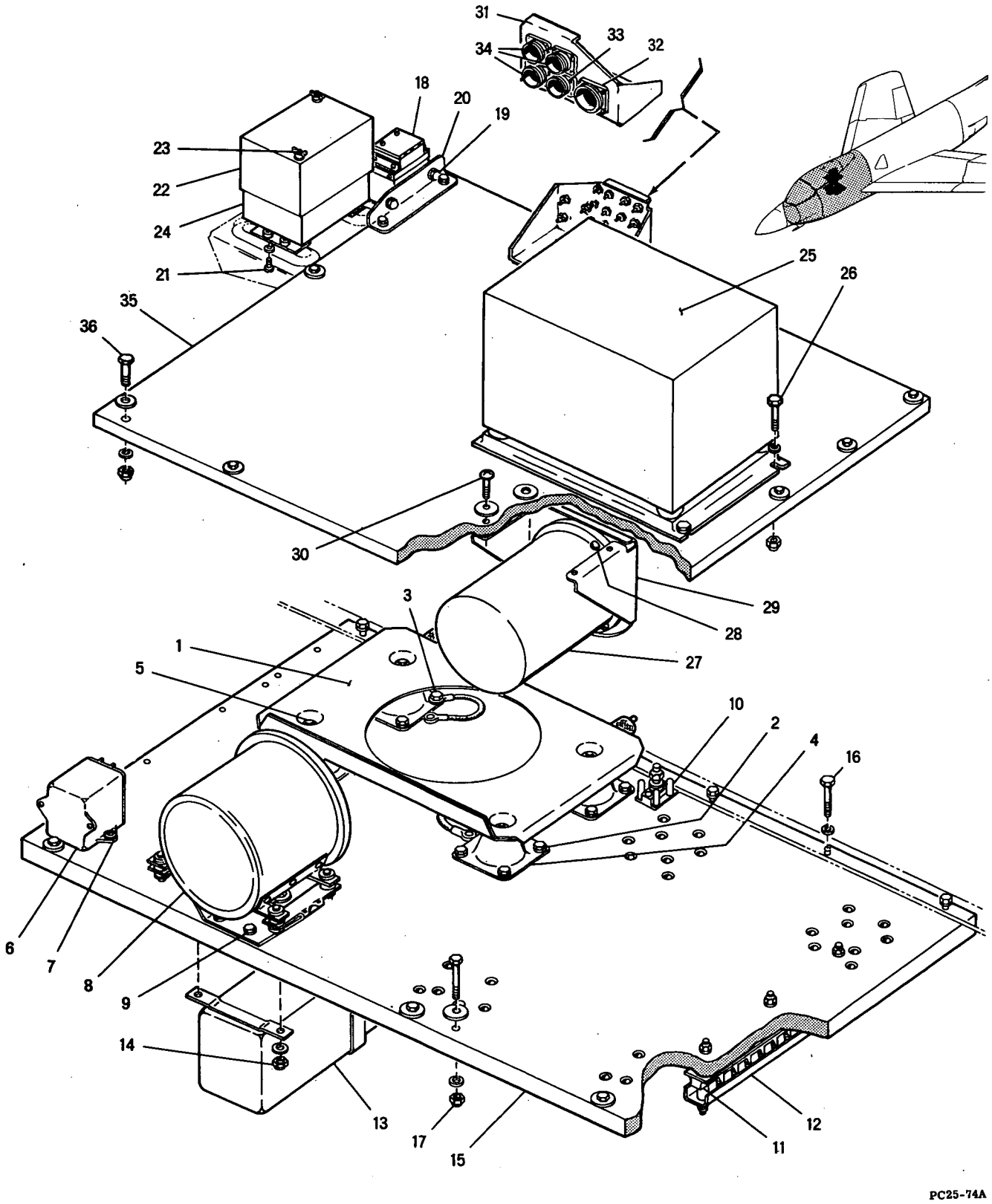

Figure 99 -- Forward Shelf Electrical Equipment Installations

FIGURE & INDEX NUMBER	PART NUMBER	1 2 3 4 5 6 7 DESCRIPTION	UNITS PER ASS'Y	USABLE ON CODE
99 - 22	25-76109- 3	• • COVER, POWER TRANSFORMER	1	
		ATTACHING PARTS		
- 23	AN500A6-20	• • SCREW	2	
	AN935-6	• • WASHER	2	
	NAS43DD1-39	• • SPACER	2	
	AN960D6	• • WASHER	4	
	AN341-6	• • NUT	2	
	AN936A6	• • WASHER	2	
	AN350-632	• • NUT, WING	2	
		¤----¤-¤-¤-----¤		
- 24	70G317G2	• • TRANSFORMER, POWER (GE)	1	
- 25	R88A0486-000	• AMPLIFIER, FUEL FLOW METER, GFP	1	
		ATTACHING PARTS		
- 26	AN3-10A	• BOLT	4	
	AN960D10L	• WASHER	4	
	4M36-01015	• WASHER (MDA)	4	
	AN364-1032	• NUT	4	
		¤----¤-¤-¤-----¤		
- 27	R88C1338-005-000	• CONTROLLER, ALT, GFP	1	
		ATTACHING PARTS		
- 28	AN515-6R10	• SCREW	3	
	AN960D6L	• WASHER	3	
	AN364-632	• NUT	3	
		¤----¤-¤-¤-----¤		
- 29	25-76092- 1	• BRACKET ASSEMBLY, ALTITUDE CONTROL MOUNTING	1	
		ATTACHING PARTS		
- 30	AN515-8R16	• SCREW	4	
	4M36-01015	• WASHER (MDA)	4	
		¤----¤-¤-¤-----¤		
- 31	25-76241-301	• BRACKET ASSY, NOZZLE CONTROL AMPLIFIER DUMMY RECEPTACLE	1	C-F
- 32	2182-6	• • RECEPTACLE, STOWAGE (CED)	1	
- 33	2182-5	• • RECEPTACLE, STOWAGE (CED)	1	
- 34	2182-17	• • RECEPTACLE, STOWAGE (CED)	3	
- 35	25-87015- 1	• SHELF ASSY, EQUIPMENT	1	A-B
	25-87015-301	• SHELF ASSY, EQUIPMENT	1	C-F
		ATTACHING PARTS		
- 36	AN3-10A	• BOLT	9	
	4M36-01015	• WASHER (MDA)	9	
	AN960D10L	• WASHER	9	
	AN364-1032	• NUT	9	
		¤----¤-¤-¤----		

Forward Fuselage

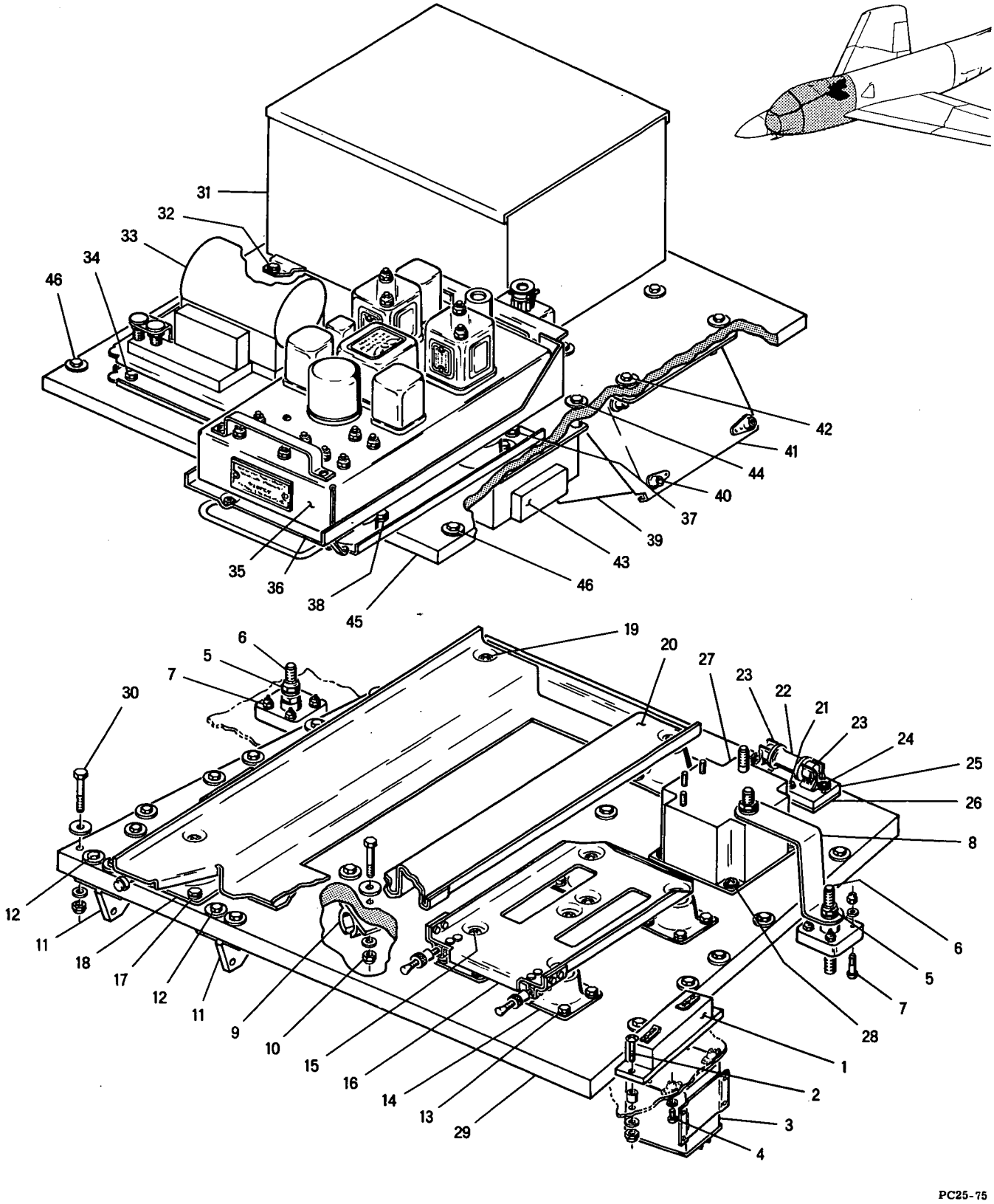

Figure 100 - Aft Shelf Electrical Equipment Installations

FIGURE & INDEX NUMBER	PART NUMBER	1 2 3 4 5 6 7 DESCRIPTION	UNITS PER ASS'Y	USABLE ON CODE
100 -	25-87008- 1	EQUIPMENT INSTALLATION, AFT SHELF ELECTRICAL, SEE FIG. 95-79 FOR NEXT HIGHER ASSY	REF	
- 1	AN5534-1	• RESISTOR, GFP	1	
		ATTACHING PARTS		
- 2	AN515-8R24	• SCREW	2	
	AN960D10	• WASHER	4	
	NAS43DD3-48	• SPACER	2	
	AN364-832	• NUT	2	
		¤----¤-¤-¤----¤		
- 3	AN3312-1	• RELAY, GUN CAMERA	1	
		ATTACHING PARTS		
- 4	AN515-8R7	• SCREW	2	
	AN960D8	• WASHER	2	
		¤----¤-¤-¤----¤		
- 5	AN365B624	• NUT	4	
	AN961-616	• WASHER	4	
- 6	18436-3	• STUD, FEED THRU (CED)	2	
		ATTACHING PARTS		
- 7	NAS229-15	• SCREW	8	
	AN960D10	• WASHER	16	
	AN364-1032	• NUT	8	
		¤----¤-¤-¤----¤		
	25-87008- 3	• EQUIPMENT ASSEMBLY	1	
- 8	25-76070- 5	• • BUS, CUT OUT RELAY TO FEED THRU STUD	1	
- 9	25-83057- 3	• • TRACK, REFRIGERATOR UNIT MOUNTING	1	
		ATTACHING PARTS		
- 10	AN3-13A	• • BOLT	4	
	4M36-01015	• • WASHER (MDA)	4	
	AN960D10	• • WASHER	4	
	AN364-1032	• • NUT	4	
		¤----¤-¤-¤----¤		
	AN393-35	• • PIN, FLAT HEAD	1	
	AN960D10L	• • WASHER	1	
	AN380-2-2	• • PIN, COTTER	1	
- 11	25-83072- 3	• • SUPPORT, REFRIGERATOR UNIT FORWARD	2	
		ATTACHING PARTS		
- 12	AN3-13A	• • BOLT	8	
	4M36-01015	• • WASHER (MDA)	8	
	AN960D10	• • WASHER	8	
	AN364-1032	• • NUT	8	
		¤----¤-¤-¤----¤		
	25-87020- 1	• • MOUNT ASSEMBLY, ARA25 MODIFIED	1	
		ATTACHING PARTS		
- 13	AN3-13A	• • BOLT	16	
	AN960D10	• • WASHER	16	
	4M36-01015	• • WASHER (MDA)	16	
	AN364-1032	• • NUT	16	
		¤----¤-¤-¤----¤		
- 14	25-87084- 3	• • • ADAPTER, SMALL SHOCK MOUNT REPLACEMENT	4	
		ATTACHING PARTS		
- 15	NAS229-17	• • • SCREW	4	
	AN960D10L	• • • WASHER	4	
	AN970-3	• • • WASHER	8	
	723	• • • BUSHING (ATI)	8	
	AN364-1032	• • • NUT	4	
		¤----¤-¤-¤----¤		
- 16	MT1043/ARA25	• • • MOUNTING, GFP	1	
	25-87021- 1	• • MOUNT ASSEMBLY, ARC27 MODIFIED	1	
		ATTACHING PARTS		
- 17	AN3-13A	• • BOLT	16	
	AN960D10	• • WASHER	16	
	4M36-01015	• • WASHER (MDA)	16	
	AN364-1032	• • NUT	16	
		¤----¤-¤-¤----¤		
- 18	25-87083- 3	• • • ADAPTER, LARGE SHOCK MOUNT REPLACEMENT	4	
		ATTACHING PARTS		
- 19	NAS230-16	• • • SCREW	4	
	4M36-02034	• • • WASHER (MDA)	8	
	AB401	• • • BUSHING (CRPI) TYPE S	8	
	AN364-428	• • • NUT	4	
		¤----¤-¤-¤----¤		

FIGURE & INDEX NUMBER	PART NUMBER	1 2 3 4 5 6 7 DESCRIPTION	UNITS PER ASS'Y	USABLE ON CODE
100 - 20	MT822/ARC27	• • • MOUNTING, GFP	1	
	25-87078- 1	• • RESISTOR ASSEMBLY, CURRENT LIMITING	1	
		ATTACHING PARTS		
- 21	NAS229-28	• • SCREW, FWD	1	
	AN960D10L	• • WASHER	1	
	4M36-01015	• • WASHER (MDA)	1	
	AN364-1032	• • NUT	1	
	NAS229-28	• • SCREW, AFT	1	
	AN960D10L	• • WASHER	1	
	AN960D10	• • WASHER	1	
	AN364-1032	• • NUT	1	
		¤----¤-¤-¤----¤		
- 22	R16G1R0	• • • RESISTOR	1	
- 23	127001	• • • CLIP (LTF)	2	
- 24	143002	• • • TERMINAL (LTF)	2	
- 25	25-87077- 3	• • PAD, CURRENT LIMITING RESISTOR MOUNTING	1	
- 26	25-87079- 3	• • INSULATOR, CURRENT LIMITING RESISTOR MTG	1	
- 27	AN3025-1	• • CUT OUT, REVERSE CURRENT	1	
		ATTACHING PARTS		
- 28	NAS229-22	• • SCREW	4	
	AN960D10	• • WASHER	4	
	4M36-01015	• • WASHER (MDA)	4	
	AN364-1032	• • NUT	4	
		¤----¤-¤-¤----¤		
- 29	25-87012- 1	• • SHELF ASSEMBLY	1	
		ATTACHING PARTS		
- 30	AN3-12A	• • BOLT	14	
	4M36-01015	• • WASHER (MDA)	14	
	AN960D10	• • WASHER	14	
	AN364-1032	• • NUT	14	
		¤----¤-¤-¤----¤		
	25-87009- 1	EQUIPMENT INSTALLATION, AFT SHELF ELECTRICAL, SEE FIG. 95-76 FOR NEXT HIGHER ASSY	REF	
- 31	E1821-2	• REGULATOR, A-C VOLTAGE (BUA) GFP	1	
		ATTACHING PARTS		
- 32	AN3-10A	• BOLT, FWD	3	
	AN960D10L	• WASHER	3	
	4M36-01015	• WASHER,(MDA)	3	
	AN364-1032	• NUT	3	
	AN3-10A	• BOLT, AFT	3	
	AN960D10L	• WASHER	6	
	AN364-1032	• NUT	3	
		¤----¤-¤-¤----¤		
- 33	E1597-1	• REGULATOR, D-C VOLTAGE (BUA) GFP	1	
		ATTACHING PARTS		
- 34	AN3-10A	• BOLT	4	
	AN960D10L	• WASHER	4	
	4M36-01015	• WASHER (MDA)	4	
	AN364-1032	• NUT	4	
		¤----¤-¤-¤----¤		
- 35	CR2781F103A1A	• UNIT, A-C SYSTEM CONTROL (GE) MCDONNELL SPEC 25-76013-1	1	
- 36	CR2781M171A1A	• TRAY, MOUNTING (GE) MCDONNELL SPEC 25-76013-3	1	
		ATTACHING PARTS		
- 37	AN3-10A	• BOLT	2	
	AN960D10L	• WASHER	2	
	4M36-01015	• WASHER (MDA)	2	
	AN364-1032	• NUT	2	
- 38	AN3-10A	• BOLT	2	
	AN960D10L	• WASHER	4	
	AN364-1032	• NUT	2	
		¤----¤-¤-¤----¤		
- 39	9565H88	• RELAY, A-C POWER (CUT)	1	
		ATTACHING PARTS		
- 40	AN3-4A	• SCREW	4	
	AN960D10	• WASHER	4	
		¤----¤-¤-¤----¤		
- 41	25-76119- 1	• BRACKET ASSEMBLY, POWER RELAY MOUNTING	1	
		ATTACHING PARTS		
- 42	AN3-10A	• BOLT	4	
	4M36-01015	• WASHER (MDA)	4	
		¤----¤-¤-¤----¤		

FIGURE & INDEX NUMBER	PART NUMBER	1 2 3 4 5 6 7 DESCRIPTION	UNITS PER ASS'Y	USABLE ON CODE
100 - 43	9565H82	• RELAY, A-C EMERGENCY TRANSFER (CUT)	1	
		ATTACHING PARTS		
- 44	AN3-15A	• BOLT	4	
	4M36-01015	• WASHER (MDA)	8	
	NAS43-3-32	• SPACER	4	
	AN960D10L	• WASHER	4	
	AN364-1032	• NUT	4	
		¤----¤-¤-¤----¤		
- 45	25-87013- 1	• SHELF ASSY, EQUIPMENT	1	
		ATTACHING PARTS		
- 46	AN3-10A	• BOLT	10	
	4M36-01015	• WASHER (MDA)	10	
	AN960D10L	• WASHER	10	
	AN364-1032	• NUT	10	
		¤----¤-¤-¤----¤		

Forward Fuselage

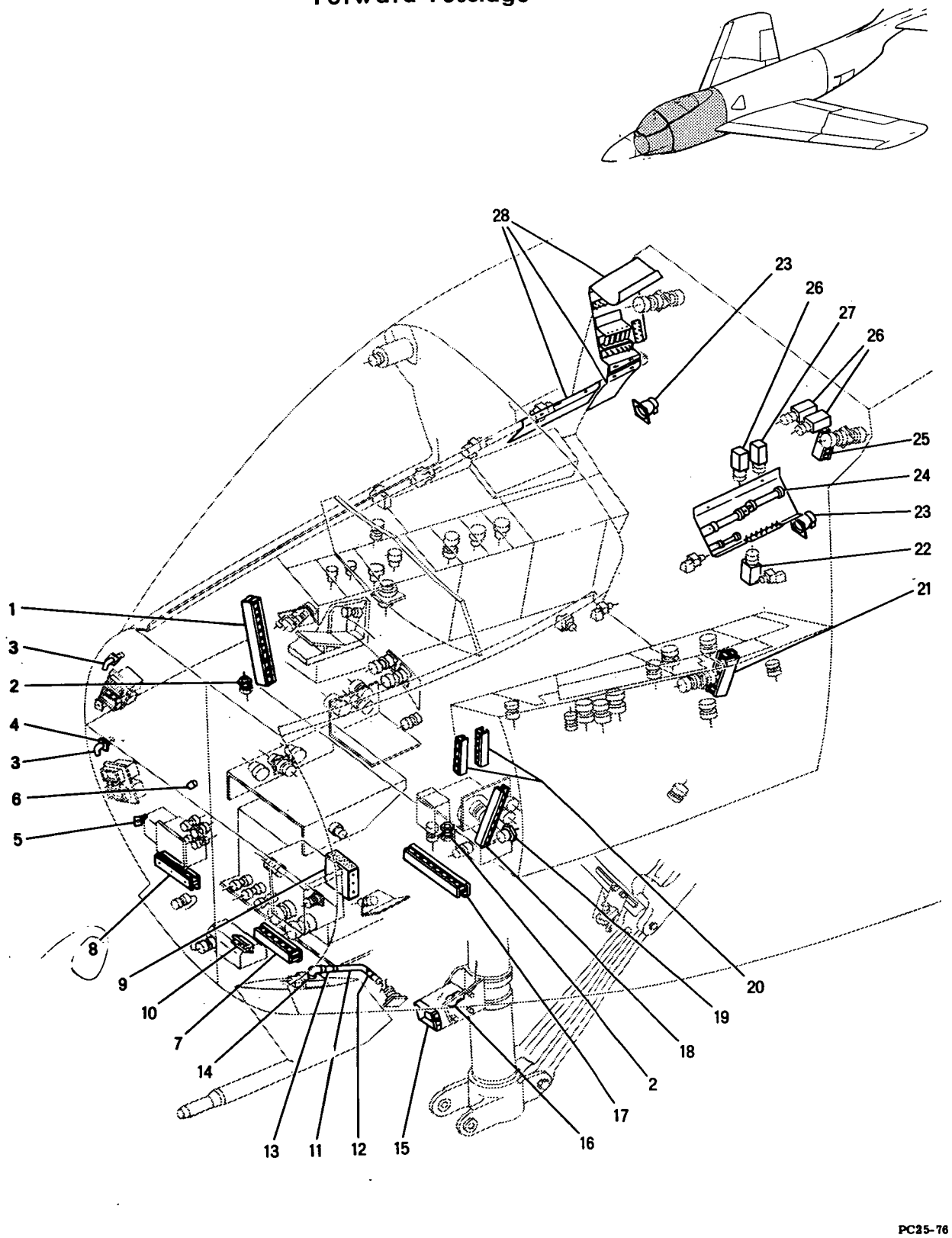

Figure 101 -- Forward Fuselage Wiring Equipment Installation (Sheet 1 of 2)

Forward Fuselage

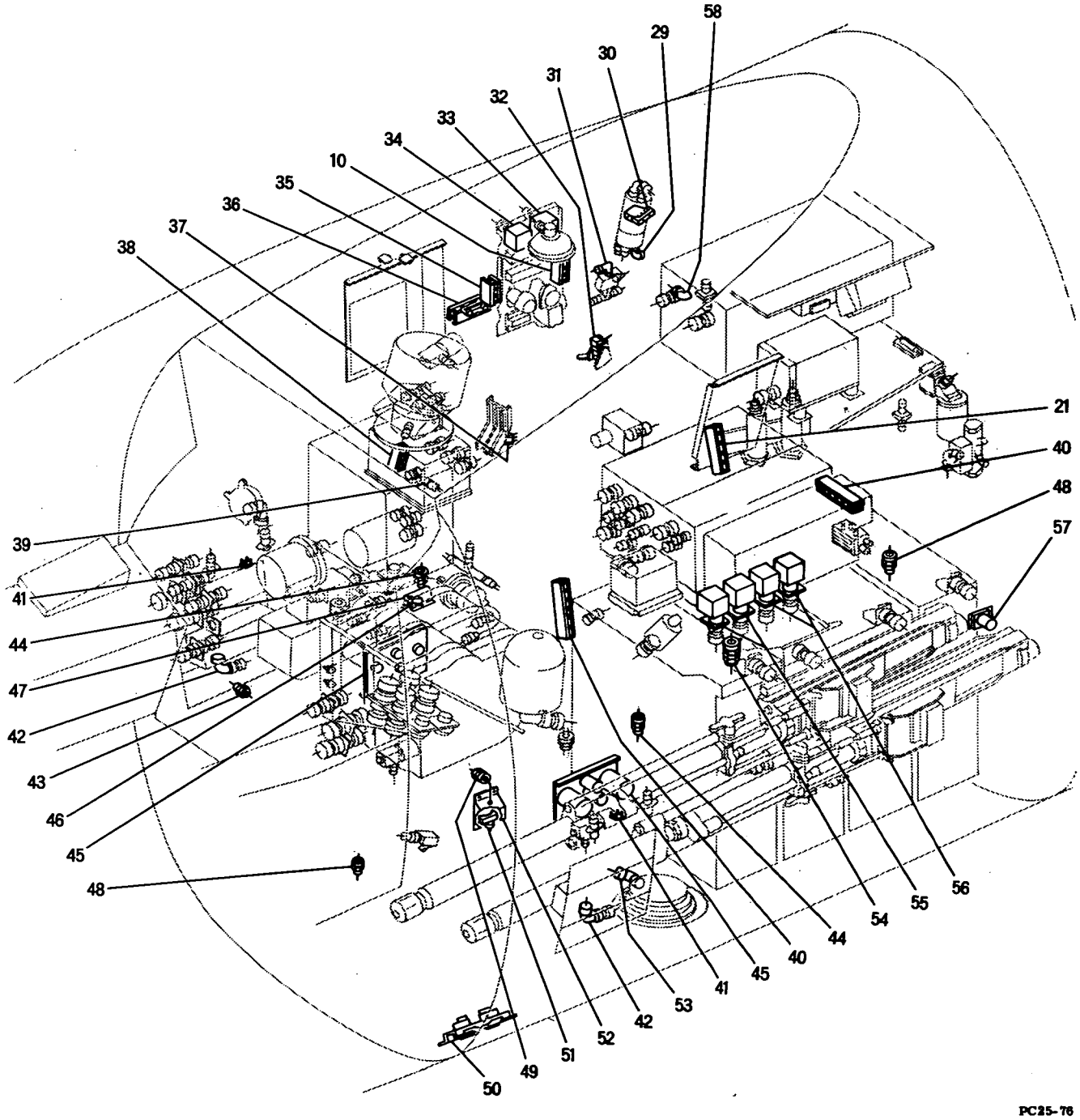

Figure 101 -- Forward Fuselage Wiring Equipment Installation (Sheet 2 of 2)

FIGURE & INDEX NUMBER	PART NUMBER	1 2 3 4 5 6 7 DESCRIPTION	UNITS PER ASS'Y	USABLE ON CODE
101 -	25-76001- 1	WIRING INSTL, FORWARD FUSELAGE, SEE FIG. 44-6 FOR NEXT HIGHER ASSEMBLY	REF	A
	25-76001-303	WIRING INSTL, FORWARD FUSELAGE, SEE FIG. 44-6 FOR NEXT HIGHER ASSEMBLY	REF	B
	25-76001-301	WIRING INSTL, FORWARD FUSELAGE, SEE FIG. 44-6 FOR NEXT HIGHER ASSEMBLY	REF	C
- 1	5M7-10-14	. PANEL ASSEMBLY, ELECTRICAL CONNECTOR (MDA)	1	
	5M8-10-14	. COVER, PANEL ASSEMBLY (MDA) USE WITH INDEX 1	1	
	AN3433-4-2	. BUS BAR, USE WITH INDEX 1	2	
- 2	920AL900-19	. SEAL (JM)	2	
	4M36-11006	. WASHER (MDA) USE WITH INDEX 2	2	
	AN3066-12	. NUT, USE WITH INDEX 2	2	
- 3	A100-455	. ADAPTER (DAGE)	2	
- 4	A100-456	. RECEPTACLE (DAGE)	1	
- 5	UG262/U	. RECEPTACLE	1	
- 6	RW30G351	. RESISTOR	1	
		ATTACHING PARTS		
	AN3-15A	. BOLT	1	
	AN960D10	. WASHER	2	
	6000	. WASHER, CENTERING (OM)	2	
	AN364-1032	. NUT	1	
		¤----¤-¤-¤----¤		
- 7	5M7-10-6	. PANEL ASSEMBLY, ELECTRICAL CONNECTOR (MDA)	1	A-B
	5M8-10-6	. COVER, PANEL ASSEMBLY (MDA) USE WITH INDEX 7	1	A-B
- 8	5M7-10-7	. PANEL ASSEMBLY, ELECTRICAL CONNECTOR (MDA)	1	C-F
	5M8-10-7	. COVER, PANEL ASSEMBLY (MDA) USE WITH INDEX 8	1	C-F
	AN3433-4-2	. BUS BAR, USE WITH INDEX 8	1	C-F
- 9	25-76147- 1	. COVER ASSEMBLY, INVERTER DUMMY LOAD	1	
		ATTACHING PARTS		
	NAS229-8	. SCREW	2	
	AN960D10L	. WASHER	2	
		¤-+--¤-¤-¤----¤		
- 10	5M7-10-2	. PANEL ASSEMBLY, ELECTRICAL CONNECTOR (MDA)	2	
	5M8-10-2	. COVER, PANEL ASSEMBLY (MDA) USE WITH INDEX 10	2	
- 11	25-76118- 1	. CABLE ASSEMBLY, TRANSFORMER COAXIAL	1	
- 12	UG23B/U	. . JACK	1	
- 13	UG21B/U	. . PLUG, PITOT MAST ANTENNA	1	
- 14	UG27B/U	. ADAPTER, PITOT MAST ANTENNA	1	
- 15	25-76106- 3	. CLIP, APPROACH LIGHT INDICATOR	1	
- 16	AN3124-307	. LAMP	1	
- 17	5M7-10-10	. PANEL ASSEMBLY, ELECTRICAL CONNECTOR (MDA)	1	
	5M8-10-10	. COVER, PANEL ASSEMBLY (MDA) USE WITH INDEX 17	1	
- 18	5M7-10-14	. PANEL ASSEMBLY, ELECTRICAL CONNECTOR (MDA)	1	
	5M8-10-14	. COVER, PANEL ASSEMBLY (MDA) USE WITH INDEX 18	1	
	AN3433-4-2	. BUS BAR, USE WITH INDEX 18	2	
	AN3433-4-3	. BUS BAR, LEFT SIDE ONLY, USE WITH INDEX 18	1	
- 19	920AL900-23	. SEAL (JM)	1	
	4M36-13007	. WASHER (MDA) USE WITH INDEX 19	1	
	AN3066-16	. NUT, USE WITH INDEX 19	1	
- 20	AN3436-2-6	. BLOCK ASSY, TERMINAL	2	
- 21	5M7-10-6	. PANEL ASSEMBLY, ELECTRICAL CONNECTOR (MDA)	2	
	5M8-10-6	. COVER, PANEL ASSEMBLY(MDA) USE WITH INDEX 21	2	
- 22	AN3303-1	. RELAY, WARNING LIGHT DIMMING	1	
- 23	A4950A24	. FLOODLIGHT (GMC)	2	C-F
- 24	25-76066- 1	. RESISTOR INSTALLATION, WARNING LIGHT DIMMING, SEE FIG. 105	1	A-B
	25-76066-301	. RESISTOR INSTALLATION, WARNING LIGHT DIMMING, SEE FIG. 105	1	C-F
- 25	AN3436-2-3	. BLOCK ASSY, TERMINAL	1	
	AN3433-2-2	. BUS BAR, USE WITH INDEX 25	1	
- 26	AN3303-1	. RELAY, WARNING LIGHTS TEST	3	
- 27	AN3303-1	. RELAY, AN/ARC27 MIKE	1	
- 28	25-76071- 1	. PANEL ASSEMBLIES, LIGHT DIMMING RESISTOR, SEE FIG. 105	1	A
	25-76071-301	. PANEL ASSEMBLIES, LIGHT DIMMING RESISTOR, SEE FIG. 105	1	B
	25-76071-303	. PANEL ASSEMBLIES, LIGHT DIMMING RESISTOR, SEE FIG. 105	1	C-F
- 29	UG27B/U	. ADAPTER, COAXIAL SWITCH	1	
- 30	AN3210-1	. SWITCH, CANOPY OPEN LIMIT	1	
	AN3169-1	. ACTUATOR, CANOPY OPEN LIMIT SWITCH, USE WITH INDEX 30	1	
	5M6-2	. INSULATOR (MDA) USE WITH INDEX 30	1	
- 31	UG27B/U	. ADAPTER, SOLENOID RELAY	1	
- 32	AN3216-1	. SWITCH, CANOPY CLOSED LIMIT	1	
	AN3167-1	. ADAPTER, CANOPY CLOSED LIMIT SWITCH, USE WITH INDEX 32	1	
	5M6-1	. INSULATOR (MDA) USE WITH INDEX 32	1	

FIGURE & INDEX NUMBER	PART NUMBER	1 2 3 4 5 6 7 DESCRIPTION	UNITS PER ASS'Y	USABLE ON CODE
101 - 33	AN3310-1	• RELAY, INVERTER	1	
- 34	AN3310-1	• RELAY, D-C BUS CONTROL	1	
- 35	5M7-10-2	• PANEL ASSEMBLY, ELECTRICAL CONNECTOR (MDA)	1	
	5M8-10-2	• COVER, PANEL ASSEMBLY (MDA) USE WITH INDEX 35	1	
	AN3433-4-2	• BUS BAR, USE WITH INDEX 35	1	
- 36	AN3436-10-2	• BLOCK ASSY, TERMINAL	1	
	25-76107- 3	• COVER, TERMINAL STRIP, USE WITH INDEX 36	1	
	25-76116- 3	• SPACER, TERMINAL STRIP COVER MOUNTING, USE WITH INDEX 36	1	
	25-76117- 3	• BUS BAR, TERMINAL STRIP, USE WITH INDEX 36	1	
- 37	AN3210-1	• SWITCH, CANOPY EMERGENCY LIMIT	1	
	AN3168-2	• ACTUATOR, CANOPY EMERGENCY LIMIT SWITCH, USE WITH INDEX 37	1	
	5M6-1	• INSULATOR (MDA) USE WITH INDEX 37	1	
- 38	5M7-10-4	• PANEL ASSEMBLY, ELECTRICAL CONNECTOR (MDA)	1	
	5M8-10-4	• COVER, PANEL ASSEMBLY (MDA) USE WITH INDEX 38	1	
- 39	UG212A/U	• ADAPTER, AN/APX6 RECEIVER & TRANSMITTER	1	
- 40	5M7-10-8	• PANEL ASSEMBLY, ELECTRICAL CONNECTOR (MDA)	2	
	5M8-10-8	• COVER, PANEL ASSEMBLY (MDA) USE WITH INDEX 40	2	
- 41	AN3436-2-1	• BLOCK ASSY, TERMINAL	2	A-B
- 42	UG212A/U	• ADAPTER, APX6 ANTENNA	2	A
- 43	5M13-4	• BUSHING (MDA)	1	A-B
	AN3066-4	• NUT, USE WITH INDEX 43	1	A-B
	AN960D1016L	• WASHER, USE WITH INDEX 43	1	A-B
- 44	AN3058-10	• COUPLING	2	B-F
	AN3066-10	• NUT, USE WITH INDEX 44	2	B-F
- 45	25-76022- 1	• PANEL ASSY, ARMAMENT FIRE CONTROL, SEE FIG. 105	2	
- 46	JV20	• ACTUATOR (MCS) DOME LIGHT LIMIT SWITCH	1	
- 47	25-76091- 3	• HOUSING, DOME LIGHT LIMIT SWITCH	1	
		ATTACHING PARTS		
	AN507-832R7	• SCREW	2	
	AN960D8	• WASHER	2	
	AN364-832	• NUT	2	
	AN515-8R8	• SCREW	2	
	AN960D8	• WASHER	4	
	AN364-832	• NUT	2	
		¤----¤-¤-¤----¤		
- 48	AN3058-4	• COUPLING	2	
	AN3066-4	• NUT, USE WITH INDEX 48	2	
	AN3054-4	• NUT, USE WITH INDEX 48	2	A
	4M36-02007	• WASHER (MDA) USE WITH INDEX 48	2	A
- 49	AN3058-3	• COUPLING	1	
	AN3066-3	• NUT, USE WITH INDEX 49	1	
	AN3054-3	• NUT, USE WITH INDEX 49	1	
	AN960D816L	• WASHER, USE WITH INDEX 49	1	
- 50	25-76073- 1	• SWITCH INSTL, EXTERNAL CANOPY, SEE FIG. 105	1	
- 51	AN3022-8	• SWITCH, ARRESTING HOOK BY-PASS	1	
	AN3224-2	• BOOT, USE WITH INDEX 51	1	
- 52	25-76083- 1	• BRACKET, ARRESTING HOOK BY-PASS SWITCH	1	
- 53	UG212A/U	• ADAPTER, AT234/APX4 ANTENNA	1	C-F
- 54	AN3058-10	• COUPLING	1	
	AN3054-10	• NUT, USE WITH INDEX 54	1	
	4M36-04009	• WASHER (MDA) USE WITH INDEX 54	1	
	AN3066-10	• NUT, USE WITH INDEX 54	1	
- 55	AN3310-1	• RELAY, EXTERNAL STORES JETTISON	2	
- 56	AN3310-1	• RELAY, EXTERNAL STORES TRANSFER	2	
- 57	C4391-5-2	• CONTROL, ARMAMENT BAY TEMPERATURE (SPTD)	1	
- 58	UG27B/U	• ADAPTER, AN/ARC27 RECEIVER & TRANSMITTER	1	

Forward Fuselage

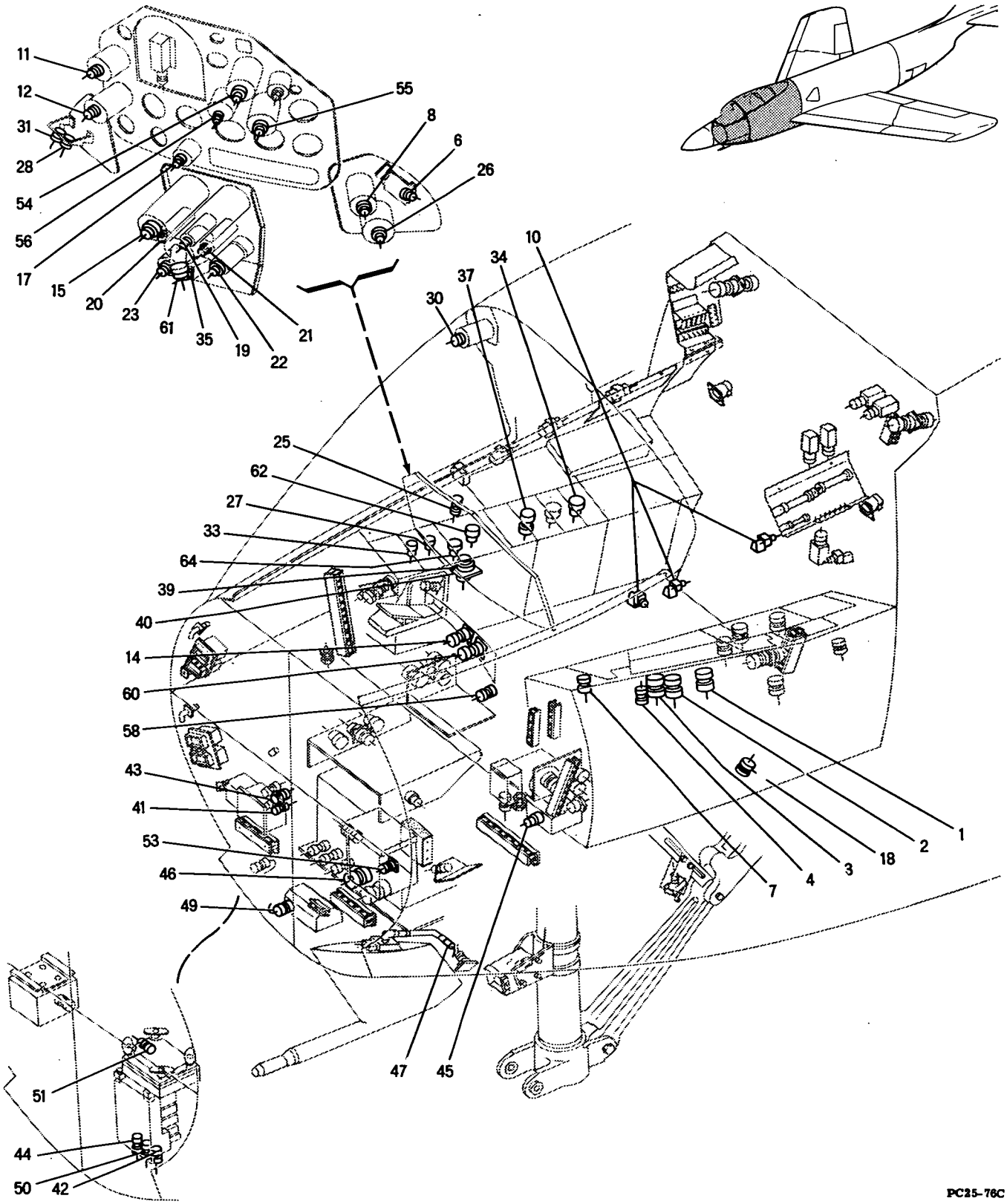

Figure 102 -- Forward Fuselage Wire Bundle Assemblies (Sheet 1 of 2)

Forward Fuselage

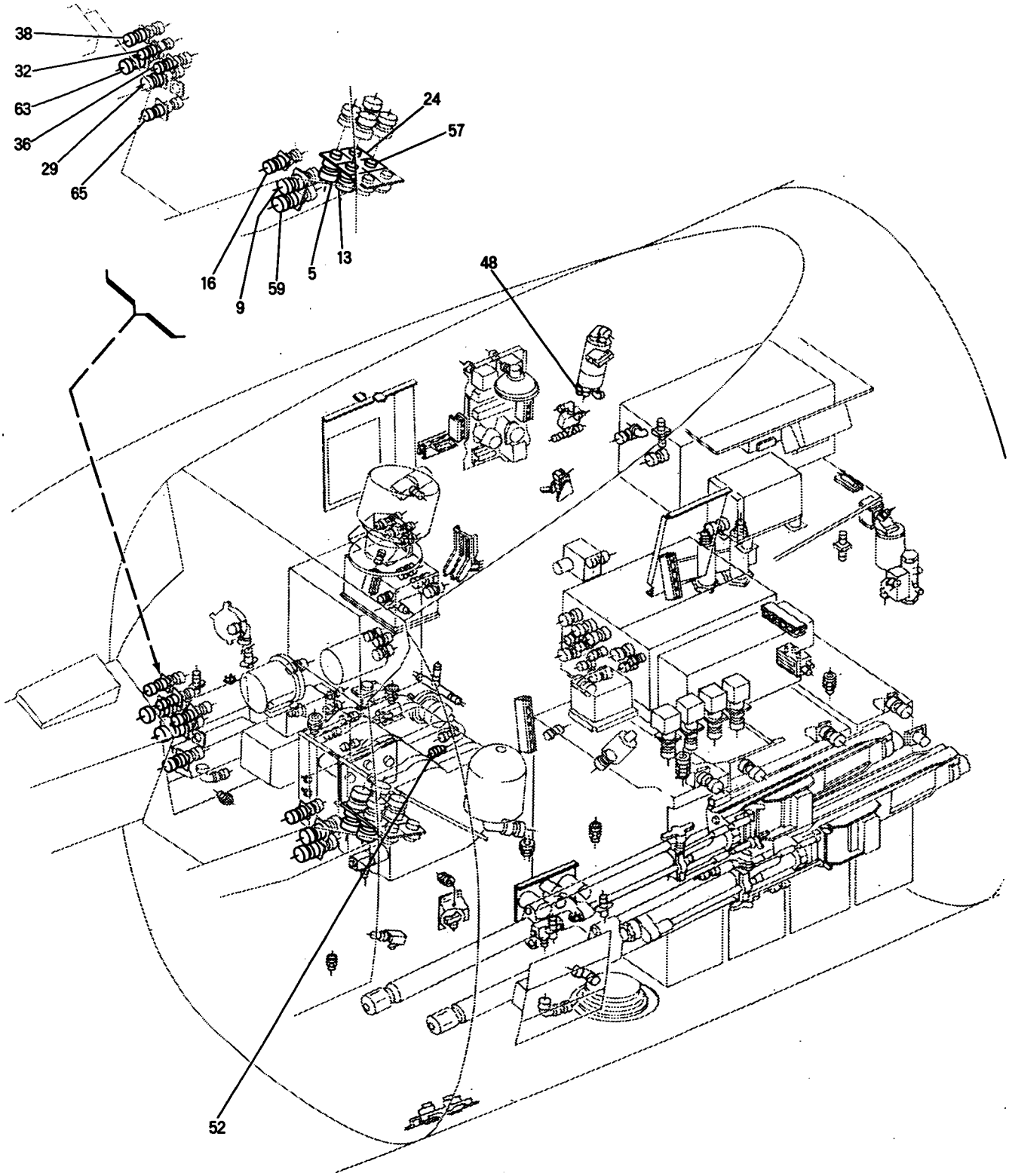

Figure 102 -- Forward Fuselage Wire Bundle Assemblies (Sheet 2 of 2)

FIGURE & INDEX NUMBER	PART NUMBER	1 2 3 4 5 6 7 DESCRIPTION	UNITS PER ASS'Y	USABLE ON CODE
102 -	25-76001- 1	WIRING INSTL, FORWARD FUSELAGE, SEE FIG. 44-6 FOR NEXT HIGHER ASSEMBLY	REF	A
	25-76001-303	WIRING INSTL, FORWARD FUSELAGE, SEE FIG. 44-6 FOR NEXT HIGHER ASSEMBLY	REF	B
	25-76001-301	WIRING INSTL, FORWARD FUSELAGE, SEE FIG. 44-6 FOR NEXT HIGHER ASSEMBLY	REF	C
	25-79000-D18	• BUNDLE ASSEMBLY, WIRE	1	A
	25-79000-F18	• BUNDLE ASSEMBLY, WIRE	1	B
	25-79000-G18	• BUNDLE ASSEMBLY, WIRE	1	C
- 1	3106BS22-14S	• • PLUG (CED) FUEL CONTROL PANEL, USE WITH MS29513-22 O RING	1	
- 2	3106BS24-28S	• • PLUG (CED) ENGINE OUTBOARD CONTROL PANEL, USE WITH MS29513-24 O RING	1	
- 3	3106BS28-15S	• • PLUG (CED) ENGINE INBOARD CONTROL PANEL, USE WITH MS29513-28 O RING	1	
- 4	AN3100-22-14S	• • RECEPTACLE, ENGINE CONTROL GRIP	1	
- 5	AN3100M28-15PW	• • RECEPTACLE	1	
	25-79000-C21	• BUNDLE ASSEMBLY, WIRE	1	A-C
- 6	3106BS18-1S	• • PLUG (CED) LH SUB INSTRUMENT PANEL, USE WITH MS29513-18 O RING	1	
- 7	3106BS14S5S	• • PLUG (CED) LH FORWARD CONSOLE PANEL LIGHTING, USE WITH MS29513-14 O RING	1	
- 8	3106BS14S2S	• • PLUG (CED) STABILATOR TRIM INDICATOR, USE WITH MS29513-14 O RING	1	
- 9	AN3100M28-12PW	• • RECEPTACLE	1	
- 10	A5395	• • LIGHT ASSEMBLY (GMC) CONSOLE FLOOD	3	
	25-79000-C28	• BUNDLE ASSEMBLY, WIRE	1	A
	25-79000-D28	• BUNDLE ASSEMBLY, WIRE	1	B
	25-79000-F28	• BUNDLE ASSEMBLY, WIRE	1	C
- 11	3106BS18-12S	• • PLUG (CED) FUEL FLOW INDICATOR, USE WITH MS29513-18 O RING	1	
- 12	AN3106M20-27S	• • PLUG, FUEL QUANITY INDICATOR, USE WITH MS29513-20 O RING	1	
- 13	AN3100C28-15P	• • RECEPTACLE	1	
- 14	AN3100-24-28S	• • RECEPTACLE, MAIN INSTRUMENT PANEL	1	
	25-79000- 29	• BUNDLE ASSEMBLY, WIRE	1	A-C
- 15	3106BS22-14S	• • PLUG (CED) MK 2 MOD O STATION SELECTOR, USE WITH MS29513-22 O RING	1	
- 16	AN3100M20-27P	• • RECEPTACLE	1	
	25-79000-A43	• BUNDLE ASSEMBLY, WIRE	1	
- 17	3106BS10SL3S	• • PLUG (CED) TACHOMETER INDICATOR, USE WITH MS29513-12 O RING	1	
- 18	3106BS10SL3S	• • PLUG (CED) DUCT TEMP THERMOSTAT, USE WITH MS29513-12 O RING	1	
- 19	3106BS14S2S	• • PLUG (CED) AFTERBURNER FUEL PRESSURE INDICATOR, USE WITH MS29513-14 O RING	1	
- 20	3106BS14S2S	• • PLUG (CED) FUEL PRESSURE INDICATOR, USE WITH MS29513-14 O RING	1	
- 21	3106BS14S2S	• • PLUG (CED) OIL PRESSURE INDICATOR, USE WITH MS29513-14 O RING	1	
- 22	3106BS14S2S	• • PLUG (CED) PNEUMATIC PRESSURE INDICATOR, USE WITH MS29513-14 O RING	1	
- 23	3106BS16S1S	• • PLUG (CED) HYDRAULIC PRESSURE INDICATOR, USE WITH MS29513-16 O RING	1	
- 24	AN3100M28-12P	• • RECEPTACLE	1	
	25-79000-C47	• BUNDLE ASSEMBLY, WIRE	1	A-B
	25-79000-D47	• BUNDLE ASSEMBLY, WIRE	1	C
- 25	3106BS14S2S	• • PLUG (CED) HEAT & VENT PANEL, USE WITH MS29513-14 O RING	1	
- 26	3106BS18-1S	• • PLUG (CED) WHEELS & FLAP POSITION INDICATOR USE WITH MS29513-18 O RING	1	
- 27	3106BS18-1S	• • PLUG (CED) UTILITY PANEL, USE WITH MS29513-18 O RING	1	
- 28	3106BS24-28S	• • PLUG (CED) RH SUB INSTRUMENT PANEL, USE WITH MS29513-24 O RING	1	
- 29	AN3100M32-7P	• • RECEPTACLE	1	
- 30	270-8	• • PLUG (CED) STAND-BY COMPASS	1	
	25-79000- 67	• BUNDLE ASSEMBLY, WIRE	1	
- 31	3106BS20-7S	• • PLUG (CED) RH SUB INSTRUMENT PANEL, USE WITH MS29513-20 O RING	1	
- 32	AN3100M24-28P	• • RECEPTACLE	1	
	25-79000- 72	• BUNDLE ASSEMBLY, WIRE	1	A
	25-79000-B72	• BUNDLE ASSEMBLY, WIRE	1	B
	25-79000-D72	• BUNDLE ASSEMBLY, WIRE	1	C
- 33	3106BS20-33S	• • PLUG (CED) TEMPERATURE CONTROL PANEL, USE WITH MS29513-20 O RING	1	
- 34	3106BS24-28S	• • PLUG (CED) EXTERIOR LIGHTS CONTROL PANEL, USE WITH MS29513-24 O RING	1	A-B
	3106BS24-28SW	• • PLUG (CED) EXTERIOR LIGHTS CONTROL PANEL, USE WITH MS29513-24 O RING	1	C-F

FIGURE & INDEX NUMBER	PART NUMBER	1 2 3 4 5 6 7 DESCRIPTION	UNITS PER ASS'Y	USABLE ON CODE
102 - 35	3106BS16S1S	• • PLUG (CED) SUB INSTRUMENT PANEL, USE WITH MS29513-16 O RING	1	
- 36	AN3100M28-15P	• • RECEPTACLE	1	
	25-79000-A81	• BUNDLE ASSEMBLY, WIRE	1	A-B
	25-79000-B81	• BUNDLE ASSEMBLY, WIRE	1	C-F
- 37	3106BS20-27S	• • PLUG (CED) AN/APX6 CONTROL UNIT, USE WITH MS29513-20 O RING	1	
- 38	AN3100M28-15PW	• • RECEPTACLE	1	
	25-76105- 9	• • PLUG ASSEMBLY, FLANGE MOUNTED	1	
- 39	25-76105- 11	• • • PLUG ASSY, ALTERED FROM 3583-526 PLUG (CED) USE WITH MS29513-28 O RING	1	
- 40	25-76111- 1	• • • BELL ASSEMBLY, FLANGE MONTED PLUG END	1	
	25-79000-C104	• BUNDLE ASSEMBLY, WIRE	1	A
	25-79000-D104	• BUNDLE ASSEMBLY, WIRE	1	B
	25-79000-104	• BUNDLE ASSEMBLY, WIRE	1	C
- 41	3106BS16S1P	• • PLUG (CED) ANGLE OF ATTACK RELAY UNIT, USE WITH MS29513-16 O RING	1	A-B
- 42	AN3106M22-14S	• • PLUG, ANGLE OF ATTACK AND YAW COMPUTER, USE WITH MS29513-22 O RING	1	C-F
- 43	3106BS18-9S	• • PLUG (CED) ANGLE OF ATTACK RELAY UNIT, USE WITH MS29513-18 O RING	1	A-B
- 44	AN3106M22-14SX	• • PLUG, ANGLE OF ATTACK AND YAW COMPUTER, USE WITH MS29513-22 O RING	1	C-F
- 45	3106BS20-4S	• • PLUG (CED) INVERTER, USE WITH MS29513-20 O RING	1	
- 46	3106BS16S1P	• • PLUG (CED) MK 86 COMPUTER, USE WITH MS29513-16 O RING	1	C-F
- 47	UG21B/U	• • PLUG, PITOT MAST ANTENNA	1	
- 48	UG21B/U	• • PLUG, AN/ARC27 COAXIAL SWITCH	1	
- 49	E1002-3-160	• • PLUG BC GUN CAMERA	1	A-C
	AN3054-6	• • NUT, USE WITH INDEX 49	1	A-C
	AN931-3-9	• • GROMMET, USE WITH INDEX 49	1	A-C
	25-79000-A124	• BUNDLE ASSEMBLY, WIRE	1	C-F
- 50	AN3106M22-14P	• • PLUG, ANGLE OF ATTACK & YAW COMPUTER, USE WITH MS29513-22 O RING	1	C-F
- 51	AN3106M22-14S	• • PLUG, PRESSURE RATIO TRANSDUCER, USE WITH MS29513-22 O RING	1	C-F
- 52	3100ES20-33S	• • RECEPTACLE (CED) ANGLE OF ATTACK TRANSDUCER	1	C-F
- 53	3100ES20-33S	• • RECEPTACLE (CED) ANGLE OF ATTACK TRANSDUCER	1	C-F
	25-79000-A190	• BUNDLE ASSEMBLY, WIRE	1	A-C
- 54	3106BS18-1S	• • PLUG (CED) RADIO ALTIMETER, USE WITH MS29513-18 O RING	1	
- 55	3106BS22-14S	• • PLUG (CED) COURSE INDICATOR, USE WITH MS29513-22 O RING	1	
- 56	3106BS10SL3S	• • PLUG (CED) ATTITUDE INDICATOR, USE WITH MS29513-12 O RING	1	
- 57	AN3100M28-15PY	• • RECEPTACLE	1	
	25-79000-224	• BUNDLE ASSEMBLY, WIRE	1	A-B
	25-79000-A224	• BUNDLE ASSEMBLY, WIRE	1	C
- 58	3106BS22-14S	• • PLUG (CED) LANDING GEAR CONTROL, USE WITH MS29513-22 O RING	1	
- 59	AN3100M28-15PX	• • RECEPTACLE	1	
- 60	AN3100-28-15S	• • RECEPTACLE	1	
	25-79000-263	• BUNDLE ASSEMBLY, WIRE	1	A-C
- 61	3106BS22-14S	• • PLUG (CED) GE COMPASS MASTER DIRECTION, USE WITH MS29513-22 O RING	1	
- 62	3106BS24-28P	• • PLUG (CED) AUTO PILOT STICK CONTROLLER, USE WITH MS29513-24 O RING	1	
- 63	AN3100M28-15PX	• • RECEPTACLE	1	
	25-79000-293	• BUNDLE ASSEMBLY, WIRE	1	A-C
- 64	3106BS24-28S	• • PLUG (CED) AUTO PILOT STICK CONTROLLER, USE WITH MS29513-24 O RING	1	
- 65	AN3100M28-15PY	• • RECEPTACLE	1	
	25-79000- 24	• BUNDLE ASSEMBLY, WIRE	1	
	25-79000-B41	• BUNDLE ASSEMBLY, WIRE	1	A-C
	25-79000- 59	• BUNDLE ASSEMBLY, WIRE	1	
	25-79000- 60	• BUNDLE ASSEMBLY, WIRE	1	
	25-79000- 61	• BUNDLE ASSEMBLY, WIRE	1	
	25-79000- 64	• BUNDLE ASSEMBLY, WIRE	1	
	25-79000- 65	• BUNDLE ASSEMBLY, WIRE	1	
	25-79000- 90	• BUNDLE ASSEMBLY, WIRE	1	B-F
	25-79000-A195	• BUNDLE ASSEMBLY, WIRE	1	A-B
	25-79000-B195	• BUNDLE ASSEMBLY, WIRE	1	C-F
	25-79000-227	• BUNDLE ASSEMBLY, WIRE	1	

Forward Fuselage

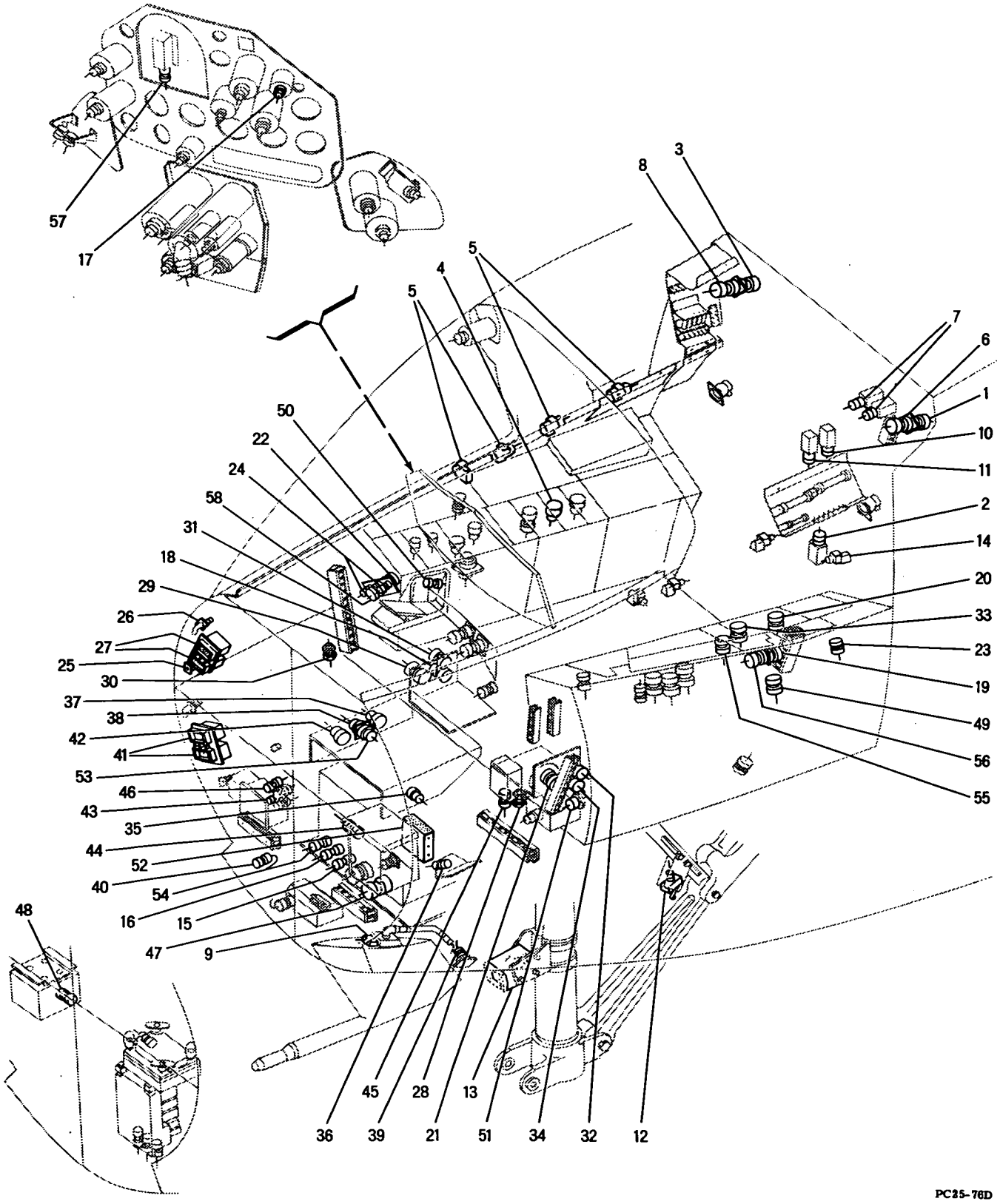

Figure 103 -- Forward Fuselage Forward Wire Bundle Assemblies

FIGURE & INDEX NUMBER	PART NUMBER	1 2 3 4 5 6 7 DESCRIPTION	UNITS PER ASS'Y	USABLE ON CODE
103 -	25-76001- 1	WIRING INSTL, FORWARD FUSELAGE, SEE FIG. 44-6 FOR NEXT HIGHER ASSEMBLY	REF	A
	25-76001-303	WIRING INSTL, FORWARD FUSELAGE, SEE FIG. 44-6 FOR NEXT HIGHER ASSEMBLY	REF	B
	25-76001-301	WIRING INSTL, FORWARD FUSELAGE, SEE FIG. 44-6 FOR NEXT HIGHER ASSEMBLY	REF	C
	25-79000-D14	. BUNDLE ASSEMBLY, WIRE	1	A-C
- 1	AN3100M32-7P	. . RECEPTACLE	1	
	25-79000-A32	. BUNDLE ASSEMBLY, WIRE	1	A-C
- 2	AN3102-20-27S	. . RECEPTACLE, WARNING LIGHT DIMMING RELAY	1	
	25-79000-C58	. BUNDLE ASSEMBLY, WIRE	1	A
	25-79000-D58	. BUNDLE ASSEMBLY, WIRE	1	B-C
- 3	AN3100M32-7P	. . RECEPTACLE	1	
	25-79000- 79	. BUNDLE ASSEMBLY, WIRE	1	A
	25-79000-A79	. BUNDLE ASSEMBLY, WIRE	1	B
	25-79000-B79	. BUNDLE ASSEMBLY, WIRE	1	C
- 4	3106BS24-28S	. . PLUG (CED) INTERIOR LIGHTS CONTROL PANEL, USE WITH MS29513-24 O RING	1	
- 5	A5395	. . LIGHT ASSEMBLY (GMC) CONSOLE FLOOD	4	
	25-79000-A94	. BUNDLE ASSEMBLY, WIRE	1	A
	25-79000-B94	. BUNDLE ASSEMBLY, WIRE	1	B-C
- 6	AN3106M32-7S	. . PLUG, USE WITH MS29513-28 O RING	1	
- 7	AN3102-20-27S	. . RECEPTACLE, WARNING LIGHTS TEST RELAY	2	
	25-79000- 97	. BUNDLE ASSEMBLY, WIRE	1	A
	25-79000-A97	. BUNDLE ASSEMBLY, WIRE	1	B-F
- 8	AN3106M32-7S	. . PLUG, USE WITH MS29513-28 O RING	1	
	25-79000-101	. BUNDLE ASSEMBLY, WIRE	1	
- 9	CP63B1DG103V	. . CONDENSER, PITOT HEATER	1	
	25-79000-A108	. BUNDLE ASSEMBLY, WIRE	1	A-C
- 10	AN3102-20-27S	. . RECEPTACLE, AN/ARC27 MICROPHONE RELAY	1	
- 11	AN3102-20-27S	. . RECEPTACLE, WARNING LIGHTS TEST RELAY	1	
	25-79000-111	. BUNDLE ASSEMBLY, WIRE	1	
- 12	HS5	. . SWITCH (EABN) NOSE GEAR LOCK LIMIT	1	
- 13	NAF1024-2	. . LIGHT ASSEMBLY, APPROACH	1	
	25-79000-176	. BUNDLE ASSEMBLY, WIRE	1	
- 14	A5395	. . FLOODLIGHT (GMC) CONSOLE, LEFT SIDE	1	
	25-79000-230	. BUNDLE ASSEMBLY, WIRE	1	A-B
- 15	3106BS16S1P	. . PLUG (CED) MK 86 COMPUTER, USE WITH MS29513-16 O RING	1	
	25-79000-232	. BUNDLE ASSEMBLY, WIRE	1	
- 16	3106BS14S2P	. . PLUG (CED) MK 86 COMPUTER, USE WITH MS29513-14 O RING	1	
	25-79000-A238	. BUNDLE ASSEMBLY, WIRE	1	A-B
	25-79000-238	. BUNDLE ASSEMBLY, WIRE	1	C
- 17	3106BS20-27S	. . PLUG (CED) ANGLE OF ATTACK INDICATOR, USE WITH MS29315-20 O RING	1	A-B
	AN3106M20-33S	. . PLUG, ANGLE OF ATTACK INDICATOR, USE WITH MS29513-20 O RING	1	C-F
- 18	AN3106M28-12SW	. . PLUG, SWITCHING CONTROL BOX, STOWED, USE WITH MS29513-28 O RING	1	
- 19	AN3106M32-7SY	. . PLUG, RADAR SET CONTROL, USE WITH MS29513-28 O RING	1	
- 20	AN3106M32-7SX	. . PLUG, APQ50 RADAR SET CONTROL, STOWED, USE WITH MS29513-28 O RING	1	
- 21	AN3106M32-7SW	. . PLUG, TRACKING CONTROL BOX, STOWED, USE WITH MS29513-28 O RING	1	
- 22	AN3106M36-7S	. . PLUG, RANGE INDICATOR, USE WITH MS29513-132 O RING	1	
- 23	AN3106M20-27S	. . PLUG, ANGLE OF ATTACK CONTROL PANEL, USE WITH MS29513-20 O RING	1	C-F
- 24	UG260/U	. . PLUG, RANGE INDICATOR, STOWED	2	
- 25	UG262/U	. . RECEPTACLE	1	
- 26	A100-456	. . RECEPTACLE (DAGE)	1	
- 27	19762	. . DISCONNECT (CED)	1	
- 28	5M13-12	. . BUSHING (MDA)	1	
	25-79000-A239	. BUNDLE ASSEMBLY, WIRE	1	
- 29	AN3106M32-7S	. . PLUG, SWITCHING CONTROL BOX, STOWED, USE WITH MS29513-28 O RING	1	
- 30	5M13-12	. . BUSHING (MDA)	1	
	25-79000-A241	. BUNDLE ASSEMBLY, WIRE	1	
- 31	AN3106M28-12S	. . PLUG, SWITCHING CONTROL BOX, STOWED, USE WITH MS29513-28 O RING	1	
- 32	AN3106M28-12S	. . PLUG, TRACKING CONTROL BOX, STOWED, USE WITH MS29513-28 O RING	1	
	25-79000-D243	. BUNDLE ASSEMBLY, WIRE	1	A-B
	25-79000-C243	. BUNDLE ASSEMBLY, WIRE	1	C-F
- 33	AN3106M28-12SY	. . PLUG, APQ50 RADAR SET CONTROL, STOWED, USE WITH MS29513-28 O RING	1	
- 34	AN3106M28-12SX	. . PLUG, TRACKING CONTROL BOX, STOWED, USE WITH MS29513-28 O RING	1	

FIGURE & INDEX NUMBER	PART NUMBER	1 2 3 4 5 6 7 DESCRIPTION	UNITS PER ASS'Y	USABLE ON CODE
103 -	25-79000-D246	• BUNDLE ASSEMBLY, WIRE	1	A-B
	25-79000-246	• BUNDLE ASSEMBLY, WIRE	1	C-F
- 35	AN3106M20-16S	• • PLUG, FLIGHT DATA UNIT, STOWED, USE WITH MS29513-28 O RING	1	
- 36	AN3106M22-14S	• • PLUG, RANGE AMPLIFIER, STOWED, USE WITH MS29513-22 O RING	1	
- 37	AN3106M24-28S	• • PLUG, FLIGHT DATA UNIT, STOWED, USE WITH MS29513-24 O RING	1	
- 38	AN3106M28-12S	• • PLUG, USE WITH MS29513-28 O RING	1	
- 39	3106BS10SL4S	• • PLUG (CED) TEMPERATURE BULB, STOWED, USE WITH MS29513-12 O RING	1	
- 40	3106BS14S5P	• • PLUG (CED) MK 86 MOD O COMPUTER, STOWED, USE WITH MS29513-14 O RING	1	
- 41	19763	• • DISCONNECT (CED)	1	
	25-79000-A247	• BUNDLE ASSEMBLY, WIRE	1	
- 42	AN3106M24-20SX	• • PLUG, FLIGHT DATA UNIT, STOWED, USE WITH MS29513-24 O RING	1	
	25-79000-251	• BUNDLE ASSEMBLY, WIRE	1	A-B
- 43	3106BS18-1P	• • PLUG (CED) ANGLE OF ATTACK RELAY UNIT, USE WITH MS29513-18 O RING	1	
	25-79000-257	• BUNDLE ASSEMBLY, WIRE	1	A-B
- 44	3106BS20-27S	• • PLUG (CED) MK 14 VOLTAGE REGULATOR, USE WITH MS29513-20 O RING	1	
	25-79000-C259	• BUNDLE ASSEMBLY, WIRE	1	A-B
	25-79000-D259	• BUNDLE ASSEMBLY, WIRE	1	C
- 45	3106BS14S5S	• • PLUG (CED) MK 75 MOD O POWER SUPPLY, USE WITH MS29513-14 O RING	1	
	25-79000-261	• BUNDLE ASSEMBLY, WIRE	1	A-B
- 46	3106BS20-27P	• • PLUG (CED) ANGLE OF ATTACK RELAY UNIT, USE WITH MS29513-20 O RING	1	
	25-79000-C265	• BUNDLE ASSEMBLY, WIRE	1	A-B
	25-79000-D265	• BUNDLE ASSEMBLY, WIRE	1	C
- 47	3106BS28-12S	• • PLUG (CED) MK 86 MOD O COMPUTER, USE WITH MS29513-28 O RING	1	
- 48	3106BS22-14SX	• • PLUG (CED) MK 25 MOD O RANGE UNIT, USE WITH MS29513-22 O RING	1	C
	25-79000-267	• BUNDLE ASSEMBLY, WIRE	1	A-B
	25-79000-A267	• BUNDLE ASSEMBLY, WIRE	1	C
- 49	3106BS28-21S	• • PLUG (CED) GUN SIGHT CONTROL PANEL, USE WITH MS29513-28 O RING	1	A-B
	3106BS24-28S	• • PLUG (CED) GUN SIGHT CONTROL PANEL, USE WITH MS29513-24 O RING	1	C
- 50	3106BS22-14S	• • PLUG (CED) MK 16 SIGHT UNIT, USE WITH MS29513-22 O RING	1	
- 51	5M13-16	• • BUSHING (MDA)	1	
	25-79000-286	• BUNDLE ASSEMBLY, WIRE	1	
- 52	25-76149- 1	• • RESISTOR ASSEMBLY, INVERTER DUMMY LOAD	1	
	AN73-35	• • • BOLT	3	
	AN960D10L	• • • WASHER	3	
	6000	• • • WASHER, CENTERING (OM)	6	
	AN960D10	• • • WASHER	3	
	AN365-1032	• • • NUT	3	
	RW33G162	• • • RESISTOR	3	
	25-76148- 3	• • • PANEL, INVERTER DUMMY LOAD	1	
	25-79000-200	• BUNDLE ASSEMBLY, WIRE	1	A-C
- 53	AN3100M28-12P	• • RECEPTACLE	1	A-C
- 54	3106BS14S5P	• • PLUG (CED) MK 86 MOD O COMPUTER, USE WITH MS29513-14 O RING	1	A-C
	25-79000-202	• BUNDLE ASSEMBLY, WIRE	1	A-C
- 55	3106BS20-27S	• • PLUG (CED) C775/APG30 RADAR SET CONTROL PANEL, USE WITH MS29513-20 O RING	1	A-C
- 56	AN3100M32-7PY	• • RECEPTACLE	1	A-C
	25-79000-258	• BUNDLE ASSEMBLY, WIRE	1	A-C
- 57	3106BS16S1S	• • PLUG (CED) ID295/APG30 RANGE INDICATOR, USE WITH MS29513-14 O RING	1	A-C
- 58	AN3100M36-7P	• • RECEPTACLE	1	A-C

FIGURE & INDEX NUMBER	PART NUMBER	1 2 3 4 5 6 7 DESCRIPTION	UNITS PER ASS'Y	USABLE ON CODE
104 -	25-76001- 1	WIRING INSTL, FORWARD FUSELAGE, SEE FIG. 44-6 FOR NEXT HIGHER ASSEMBLY	REF	A
	25-76001-303	WIRING INSTL, FORWARD FUSELAGE, SEE FIG. 44-6 FOR NEXT HIGHER ASSEMBLY	REF	B
	25-76001-301	WIRING INSTL, FORWARD FUSELAGE, SEE FIG. 44-6 FOR NEXT HIGHER ASSEMBLY	REF	C
	25-79000- A6	. BUNDLE ASSEMBLY, WIRE	1	
- 1	3106BS10SL4S	. . PLUG (CED) GUN CHARGING VALVE, LOWER GUNS, USE WITH MS29513-12 O RING	1	
	25-79000- A8	. BUNDLE ASSEMBLY, WIRE	1	
- 2	3106BS10SL4S	. . PLUG (CED) GUN CHARGING VALVE, UPPER GUNS, USE WITH MS29513-12 O RING	1	
	25-79000-C20	. BUNDLE ASSEMBLY, WIRE	1	A-B
	25-79000-D20	. BUNDLE ASSEMBLY, WIRE	1	C
- 3	3106BS14S1S	. . PLUG (CED) AN/ARC27 COAXIAL SWITCH, USE WITH MS29513-14 O RING	1	
- 4	3106BS16S1S	. . PLUG (CED) AIR SPEED SWITCH, USE WITH MS29513-16 O RING	1	
- 5	3106BS10SL3S	. . PLUG (CED) SLAT SELECTOR VALVE, USE WITH MS29513-12 O RING	1	
- 6	AN3106M28-15SW	. . PLUG, USE WITH MS29513-28 O RING	1	
- 7	3106BS14S2S	. . PLUG (CED) NOZZLE CONTROL AMPLIFIER, USE WITH MS29513-14 O RING	1	C
	25-79000-D23	. BUNDLE ASSEMBLY, WIRE	1	
- 8	3106BS16S1S	. . PLUG (CED) AILERON FEEL TRIM ACTUATOR, USE WITH MS29513-16 O RING	1	
- 9	3106BS22-14PW	. . PLUG (CED) STABILATOR CONTROL AMPLIFIER, USE WITH MS29513-22 O RING	1	
- 10	3106BS14S2S	. . PLUG (CED) AN/ARA25 ANTENNA SOLENOID RELAY, USE WITH MS29513-14 O RING	1	
- 11	AN3106M28-12SW	. . PLUG, USE WITH MS29513-28 O RING	1	
	25-79000-B30	. BUNDLE ASSEMBLY, WIRE	1	A-C
- 12	3106BS28-15S	. . PLUG (CED) USE WITH MS29513-18 O RING	1	
- 13	3106BS14S9S	. . PLUG (CED) FUEL FLOW AMPLIFIER, USE WITH MS29513-14 O RING	1	
- 14	3106BS16S1P	. . PLUG (CED) FUEL FLOW AMPLIFIER, USE WITH MS29513-16 O RING	1	
- 15	3106BS18-1P	. . PLUG (CED) FUEL FLOW AMPLIFIER, USE WITH MS29513-18 O RING	1	
	25-79000- 31	. BUNDLE ASSEMBLY, WIRE	1	A-B
	25-79000-A31	. BUNDLE ASSEMBLY, WIRE	1	C
- 16	AN3106M20-27S	. . PLUG, USE WITH MS29513-20 O RING	1	
- 17	AN3100-22-19S	. . RECEPTACLE, EXTERNAL STORES JETTISON RELAY	2	
	25-79000- 33	. BUNDLE ASSEMBLY, WIRE	1	A-B
	25-79000-A33	. BUNDLE ASSEMBLY, WIRE	1	C
- 18	AN3100-22-19S	. . RECEPTACLE, EXTERNAL STORES TRANSFER RELAY	2	
	25-79000-B37	. BUNDLE ASSEMBLY, WIRE	1	
- 19	3106BS10SL3S	. . PLUG (CED) UPPER RH GUN, USE WITH MS29513-12 O RING & AN3057-4A ADAPTER	1	
- 20	3106BS10SL3S	. . PLUG (CED) LOWER RH GUN, USE WITH MS29513-12 O RING & AN3057-4A ADAPTER	1	
	25-79000- 45	. BUNDLE ASSEMBLY, WIRE	1	
- 21	AN3106M28-12S	. . PLUG, USE WITH MS29513-28 O RING	1	
	25-79000-D49	. BUNDLE ASSEMBLY, WIRE	1	A-B
	25-79000-F49	. BUNDLE ASSEMBLY, WIRE	1	C-F
- 22	AN3106M32-7S	. . PLUG, USE WITH MS29513-28 O RING	1	
- 23	AN3234-1	. . SWITCH, DOME LIGHT LIMIT	1	
- 24	AN3049-1	. . LIGHT ASSEMBLY, COMPARTMENT DOME	1	
	25-79000-A52	. BUNDLE ASSEMBLY, WIRE	1	A-C
- 25	AN3100-22-19S	. . RECEPTACLE, BUS CONTROL RELAY	1	
	25-79000- 53	. BUNDLE ASSEMBLY, WIRE	1	
- 26	AN3100-22-19S	. . RECEPTACLE, INVERTER RELAY	1	
	25-79000-A62	. BUNDLE ASSEMBLY, WIRE	1	
- 27	3106BS14S5S	. . PLUG (CED) ATTITUDE CONTROL, USE WITH MS29513-14 O RING	1	
- 28	3106BS18-11S	. . PLUG (CED) DAMPER CONTROL AMPLIFIER, USE WITH MS29513-18 O RING	1	
- 29	3106BS20-27S	. . PLUG (CED) GAIN CONTROL UNIT, USE WITH MS29513-20 O RING	1	
- 30	3106BS28-15PW	. . PLUG (CED) DAMPER CONTROL AMPLIFIER, USE WITH MS29513-28 O RING	1	
	25-79000- 69	. BUNDLE ASSEMBLY, WIRE	1	
- 31	AN3106M24-20S	. . PLUG, USE WITH MS29513-24 O RING	1	
	25-79000- 78	. BUNDLE ASSEMBLY, WIRE	1	
- 32	3106BS16S8S	. . PLUG (CED) FLOW CONTROL BRAIN, USE WITH MS29513-16 O RING	1	
- 33	3106BS16S8S	. . PLUG (CED) TEMPERATURE CONTROL ACTUATOR, USE WITH MS29513-16 O RING	1	
- 34	3106BS16S1S	. . PLUG (CED) FLOW CONTROL ACTUATOR, USE WITH MS29513-16 O RING	1	

Forward Fuselage

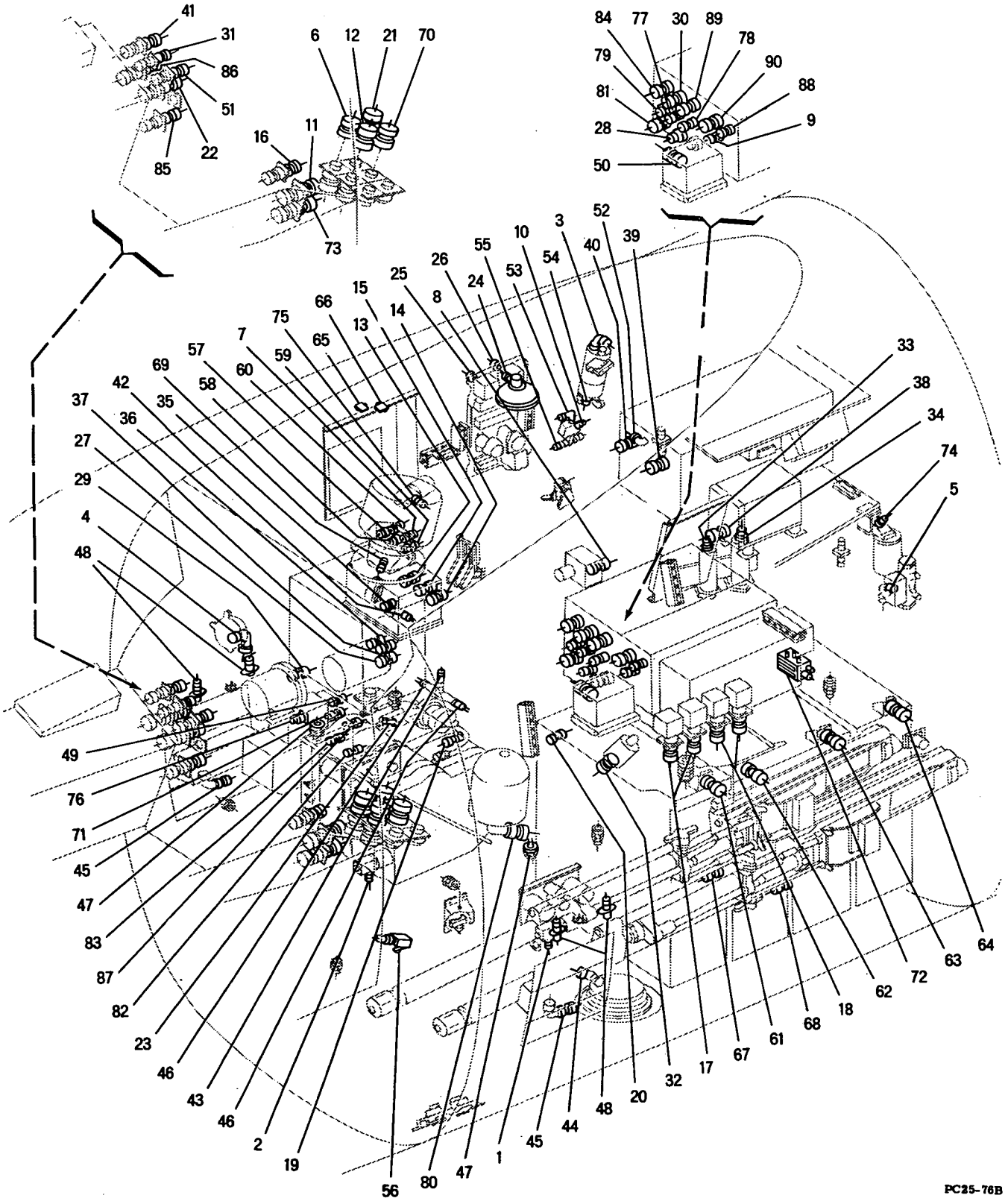

Figure 104 -- Forward Fuselage Aft Wire Bundle Assemblies

FIGURE & INDEX NUMBER	PART NUMBER	1 2 3 4 5 6 7 DESCRIPTION	UNITS PER ASS'Y	USABLE ON CODE
104 -	25-79000-A83	• BUNDLE ASSEMBLY, WIRE	1	
- 35	3106BS8S1P	• • PLUG (CED) AN/APX6 RECEIVER & TRANSMITTER, USE WITH 3-1549-3-26 O RING (PA)	1	
- 36	3106BS14S5S	• • PLUG (CED) AN/APX6 RECEIVER & TRANSMITTER, USE WITH MS29513-14 O RING	1	
- 37	3106BS18-1P	• • PLUG (CED) AN/APX6 RECEIVER & TRANSMITTER, USE WITH MS29513-18 O RING	1	
- 38	3106BS22-14S	• • PLUG (CED) AM608/ARA25 CONTROL AMPLIFIER, USE WITH MS29513-22 O RING	1	
- 39	3106BS24-5S	• • PLUG (CED) AN/ARC27 RECEIVER & TRANSMITTER, USE WITH MS29513-24 O RING	1	
- 40	3106BS24-7S	• • PLUG (CED) AN/ARC27 RECEIVER & TRANSMITTER, USE WITH MS29513-24 O RING	1	
- 41	AN3106M28-15SW	• • PLUG, USE WITH MS29513-28 O RING	1	
	25-79000- 85	• BUNDLE ASSEMBLY, WIRE	1	A
	25-79000- 98	• BUNDLE ASSEMBLY, WIRE	1	B-F
- 42	UG59B/U	• • PLUG, AN/APX6 RECEIVER & TRANSMITTER	1	
- 43	UG60A/U	• • PLUG, COAXIAL TEE	1	A
- 44	UG59B/U	• • PLUG, AT234/APX6 ANTENNA	1	B-F
	25-79000- 89	• BUNDLE ASSEMBLY, WIRE	2	A
- 45	UG59B/U	• • PLUG, APX6 ANTENNA	1	A
- 46	UG59B/U	• • PLUG, COAXIAL TEE	1	A
- 47	AN3058-10	• • COUPLING	1	A
	25-79000- 91	• BUNDLE ASSEMBLY, WIRE	4	A-B
- 48	AN3035-2	• • LIGHT ASSEMBLY, FUSELAGE FORMATION	1	
	25-79000- 92	• BUNDLE ASSEMBLY, WIRE	1	
- 49	3106BS16S8S	• • PLUG (CED) FLASHER, USE WITH MS29513-16 O RING	1	
- 50	3106BS20-29S	• • PLUG (CED) ELECTRONIC REGULATOR, USE WITH MS29513-20 O RING	1	
- 51	AN3106M28-15S	• • PLUG, USE WITH MS29513-28 O RING	1	
	25-79000-105	• BUNDLE ASSEMBLY, WIRE	1	
- 52	UG21B/U	• • PLUG, AN/ARC27 RECEIVER & TRANSMITTER	1	
- 53	UG21B/U	• • PLUG, AN/ARA25 ANTENNA SOLENOID RELAY	1	
	25-79000-106	• BUNDLE ASSEMBLY, WIRE	1	
- 54	UG21B/U	• • PLUG,AN/ARC27 COAXIAL SWITCH	1	
- 55	UG21B/U	• • PLUG, AN/ARC25 SOLENOID RELAY	1	
	25-79000-109	• BUNDLE ASSEMBLY WIRE	1	
- 56	H203G	• • SWITCH (EABN) NOSE GEAR POSITION LIMIT	1	
	25-79000-116	• BUNDLE ASSEMBLY, WIRE	1	C-F
- 57	3106BS18-1P	• • PLUG (CED) NOZZLE CONTROL AMPLIFIER, USE WITH MS29513-18 O RING	1	C-F
- 58	TA3106ES16-13S	• • PLUG (CED) NOZZLE CONTROL AMPLIFIER	1	C-F
- 59	3106BS14S2P	• • PLUG (CED) NOZZLE CONTROL AMPLIFIER, USE WITH MS29513-14 O RING	1	C-F
- 60	3106BS14S5S	• • PLUG (CED) NOZZLE CONTROL AMPLIFIER, USE WITH MS29513-14 O RING	1	
	25-79000-121	• BUNDLE ASSEMBLY, WIRE	1	A-C
- 61	3106BS16-11S	• • PLUG (CED) AMMO BOX NO. 1, USE WITH MS29513-16 O RING	1	
- 62	3106BS16-11S	• • PLUG (CED) AMMO BOX NO. 2, USE WITH MS29513-16 O RING	1	
- 63	25-76104- 1	• • PLUG ASSEMBLY, AMMO BOX NO. 3, USE WITH MS29513-16 O RING	1	
	25-76103- 3	• • • NUT, AMMO BOX PLUG COUPLING	1	
	AN3055-16-8	• • • ADAPTER	1	
	AN3106A16-11S	• • • PLUG	1	
- 64	25-76104- 1	• • PLUG ASSEMBLY, AMMO BOX NO. 4, USE WITH MS29513-16 O RING	1	
	25-76103- 3	• • • NUT, AMMO BOX PLUG COUPLING	1	
	AN3055-16-8	• • • ADAPTER	1	
	AN3106A16-11S	• • • PLUG	1	
	25-79000-126	• BUNDLE ASSEMBLY, WIRE	1	A-B
	25-79000-A126	• BUNDLE ASSEMBLY, WIRE	1	C-F
- 65	CP53B1EF105K	• • CAPACITOR	1	
- 66	CP53B1EF205K	• • CAPACITOR	1	A-B
	CP53B4EF504K	• • CAPACITOR	1	C-F
	25-79000-140	• BUNDLE ASSEMBLY, WIRE	1	
- 67	AN3106-10SL3S	• • PLUG, UPPER LH GUN, USE WITH MS29513-12 O RING AND AN3057-4A ADAPTER	1	
	25-79000-142	• BUNDLE ASSEMBLY, WIRE	1	
- 68	AN3106-10SL3S	• • PLUG, LOWER LH GUN, USE WITH MS29513-12 O RING AND AN3057-4A ADAPTER	1	
	25-79000-172	• BUNDLE ASSEMBLY, WIRE	1	B-F
- 69	3106BS10SL4S	• • PLUG (CED) CABIN PRESSURE REGULATOR, USE WITH MS29513-12 O RING	1	
	25-79000-A192	• BUNDLE ASSEMBLY, WIRE	1	
- 70	AN3106M28-15SY	• • PLUG, USE WITH MS29513-28 O RING	1	
- 71	3106BS20-27S	• • PLUG (CED) COMPASS ADAPTER, USE WITH MS29513-20 O RING	1	

FIGURE & INDEX NUMBER	PART NUMBER	1 2 3 4 5 6 7 DESCRIPTION	UNITS PER ASS'Y	USABLE ON CODE
104 - 72	NO NUMBER	• • RECEPTACLE, JUNCTION BOX, FURNISHED WITH MT803/APN22	REF	
	S1789-1177P1	• • CABLE, COAXIAL (RAY) 48.0 IN. LONG	1	
	25-79000-226	• BUNDLE ASSEMBLY, WIRE	1	A-B
	25-79000-A226	• BUNDLE ASSEMBLY, WIRE	1	C
- 73	AN3106-28-15SX	• • PLUG, USE WITH MS29513-28 O RING	1	
- 74	3106BS16S8S	• • PLUG (CED) ARMAMENT BAY TEMPERATURE CONTROL USE WITH MS29513-16 O RING	1	
- 75	3106BS10SL4S	• • PLUG (CED) GUN VENT VALVE, USE WITH MS29513-12 O RING	1	
	25-79000-252	• BUNDLE ASSEMBLY, WIRE	1	A-B
- 76	AN3100-18-1S	• • RECEPTACLE, ANGLE OF ATTACK DETECTOR UNIT	1	
	25-79000-287	• BUNDLE ASSEMBLY, WIRE	1	
- 77	3106BS22-14PW	• • PLUG (CED) DAMPER CONTROL AMPLIFIER, USE WITH MS29513-22 O RING	1	
- 78	3106BS22-14PZ	• • PLUG (CED) DAMPER CONTROL AMPLIFIER, USE WITH MS29513-22 O RING	1	
	25-79000-289	• BUNDLE ASSEMBLY, WIRE	1	
- 79	3106BS22-14P	• • PLUG (CED) DAMPER CONTROL AMPLIFIER, USE WITH MS29513-22 O RING	1	
	25-79000-B291	• BUNDLE ASSEMBLY, WIRE	1	
- 80	3106BS24-28S	• • PLUG (CED) VERTICAL GYRO, USE WITH MS29513-24 O RING	1	
- 81	3106BS24-28P	• • PLUG (CED) DAMPER CONTROL AMPLIFIER, USE WITH MS29513-24 O RING	1	
	25-79000-297	• BUNDLE ASSEMBLY, WIRE	1	
- 82	3106BS14S2P	• • PLUG (CED) COMPASS ADAPTER, USE WITH MS29513-14 O RING	1	
- 83	3106BS16S1S	• • PLUG (CED) COMPASS ADAPTER, USE WITH MS29513-16 O RING	1	
	25-79000-299	• BUNDLE ASSEMBLY, WIRE	1	
- 84	3106BS28-15P	• • PLUG (CED) DAMPER CONTROL AMPLIFIER, USE WITH MS29513-28 O RING	1	
- 85	AN3106M28-15SY	• • PLUG, USE WITH MS29513-28 O RING	1	
	25-79000-C301	• BUNDLE ASSEMBLY, WIRE	1	
- 86	AN3106M28-15SX	• • PLUG, USE WITH MS29513-28 O RING	1	
- 87	3106BS22-14P	• • PLUG (CED) COMPASS ADAPTER, USE WITH MS29513-22 O RING	1	
- 88	3106BS22-14P	• • PLUG (CED) ELEVATOR CONTROL AMPLIFIER, USE WITH MS29513-22 O RING	1	
- 89	3106BS28-15PX	• • PLUG (CED) DAMPER CONTROL AMPLIFIER, USE WITH MS29513-28 O RING	1	
- 90	3106BS28-15S	• • PLUG (CED) ELEVATOR CONTROL AMPLIFIER, USE WITH MS29513-28 O RING	1	

FIGURE & INDEX NUMBER	PART NUMBER	1 2 3 4 5 6 7 DESCRIPTION	UNITS PER ASS'Y	USABLE ON CODE
105 -	25-76071- 1	PANEL ASSEMBLIES, LIGHT DIMMING RESISTOR, SEE FIG. 101-28 FOR NEXT HIGHER ASSEMBLY	REF	A
	25-76071-301	PANEL ASSEMBLIES, LIGHT DIMMING RESISTOR, SEE FIG. 101-28 FOR NEXT HIGHER ASSEMBLY	REF	B
	25-76071-303	PANEL ASSEMBLIES, LIGHT DIMMING RESISTOR, SEE FIG. 101-28 FOR NEXT HIGHER ASSEMBLY	REF	C-F
	25-76071- 7	. PANEL ASSEMBLY	1	A
	25-76071- 13	. PANEL ASSEMBLY	1	B-F
		ATTACHING PARTS		
- 1	AN509-10R10	. SCREW	2	
- 2	AN515-6R6	. SCREW	6	
	AN960D6L	. WASHER	12	
	AN363-632	. NUT	6	
		¤----¤-¤-¤----¤		
- 3	AN3436-2-5	. . BLOCK ASSY, TERM.	2	A
	AN3434-2	. . STRIP, INSULATING, USE WITH INDEX 3	1	A
	AN3434-1	. . STRIP, INSULATING, USE WITH INDEX 3	2	A
- 4	RW31G560	. . RESISTOR	1	
- 5	RW31G220	. . RESISTOR	1	
- 6	RW31G710	. . RESISTOR	1	
- 7	RW31G250	. . RESISTOR	1	
- 8	AN73-21	. . BOLT	4	
	AN960D10	. . WASHER	4	
	6000	. . WASHER, CENTERING (OM)	8	
	AN960-10	. . WASHER	4	
	AN363-1032	. . NUT	4	
- 9	RW33G250	. . RESISTOR	1	
- 10	RW33G450	. . RESISTOR	1	
- 11	AN73-35	. . BOLT	2	
	AN960D10	. . WASHER	2	
	6000	. . WASHER, CENTERING (OM)	4	
	AN960-10	. . WASHER	2	
	AN363-1032	. . NUT	2	
- 12	25-89023- 3	. . PLACARD, EXTERIOR LIGHTS RESISTORS WIRING DIAGRAM	1	
- 13	25-76057- 1	. . PANEL ASSEMBLY, EXTERIOR LIGHTS RESISTOR	1	A
	25-76057-301	. . PANEL ASSEMBLY, EXTERIOR LIGHTS RESISTOR	1	B-C
- 14	AN253-2-1038	. . . PIN, HINGE	1	
- 15	MS20001PX4-1050	. . . HINGE, HALF	1	
- 16	MS20001PY4-1050	. . . HINGE, HALF	1	
- 17	AN3436-2-10	. BLOCK ASSY, TERMINAL	1	B-F
	25-76071- 3	. PANEL ASSEMBLY	1	A
		ATTACHING PARTS		
- 18	AN509-10R10	. SCREW	2	
- 19	AN515-6R6	. SCREW	3	
	AN960D6L	. WASHER	6	
	AN365-632	. NUT	3	
		¤----¤-¤-¤----¤		
- 20	AN3436-2-1	. . BLOCK ASSY, TERM.	1	A
	AN3434-1	. . STRIP, INSULATING, USE WITH INDEX 20	2	A
- 21	RW34G8R0	. . RESISTOR	1	A
- 22	RW40G4R0	. . RESISTOR	1	A
- 23	RW40G100	. . RESISTOR	1	
- 24	AN73-35	. . BOLT	3	
	AN960D10	. . WASHER	3	
	6001	. . WASHER, CENTERING (OM)	6	
	AN970-3	. . WASHER	3	
	AN363-1032	. . NUT	3	
- 25	25-89022- 3	. . PLACARD, FLOOD LIGHT RESISTORS WIRING DIAGRAM	1	A
- 26	25-76056- 1	. . PANEL ASSEMBLY, FLOOD LIGHT RESISTORS	1	A
- 27	AN253-2-338	. . . PIN, HINGE	1	
- 28	MS20001PX3-350	. . . HINGE, HALF	1	
- 29	MS20001PY3-350	. . . HINGE, HALF	1	
	25-76071- 9	. PANEL ASSEMBLY	1	B
	25-76071- 11	. PANEL ASSEMBLY	1	C-F
		ATTACHING PARTS		
- 30	AN509-10R10	. SCREW	2	
- 31	AN515-6R6	. SCREW	3	
	AN960D6L	. WASHER	3	
	AN365-632	. NUT	3	
		¤----¤-¤-¤----¤		
- 32	AN3436-2-4	. . BLOCK ASSY, TERM.	1	B-F
- 33	RW40G100	. . RESISTOR	1	
- 34	RW33G5R3	. . RESISTOR	1	B
	RW33G5R6	. . RESISTOR	1	C-F

Forward Fuselage

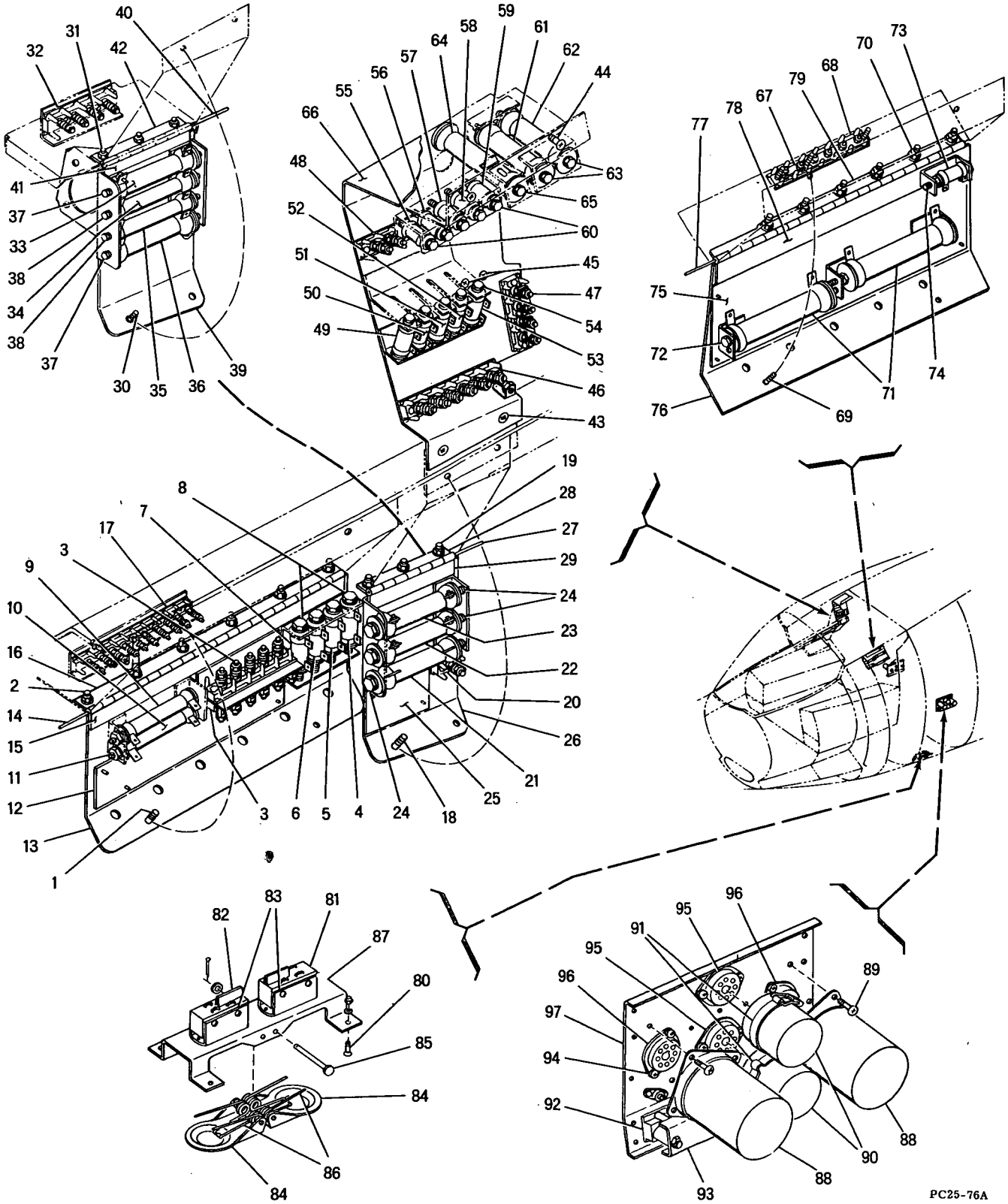

Figure 105 -- Forward Fuselage Electrical Installation Details

FIGURE & INDEX NUMBER	PART NUMBER	1 2 3 4 5 6 7 DESCRIPTION	UNITS PER ASS'Y	USABLE ON CODE
105 - 35	RW33G140	• • RESISTOR	1	B-F
- 36	RW34G5R3	• • RESISTOR	1	B
	RW34G5R6	• • RESISTOR	1	C-F
- 37	AN73-35	• • BOLT	2	
	AN960D10	• • WASHER	2	
	6001	• • WASHER, CENTERING (OM)	4	
	AN970-3	• • WASHER	2	
	AN363-1032	• • NUT	2	
- 38	AN73-35	• • BOLT	2	
	AN960D10	• • WASHER	4	
	6000	• • WASHER, CENTERING (OM)	4	
	AN363-1032	• • NUT	2	
	25-89074- 5	• • PLACARD, FLOOD LIGHT RESISTORS WIRING DIAGRAM	1	B
	25-76132- 1	• • PANEL ASSY FLOOD LIGHT RESISTORS	1	B
- 39	25-76132-301	• • PANEL ASSY, FLOOD LIGHT RESISTORS	1	C-F
- 40	AN253-2-338	• • • PIN, HINGE	1	
- 41	MS20001PY3-350	• • • HINGE, HALF	1	
- 42	MS20001PX3-350	• • • HINGE, HALF	1	
	25-76071- 5	• PANEL ASSEMBLY	1	
		ATTACHING PARTS		
- 43	AN509-10R7	• SCREW	2	
- 44	AN509-10R8	• SCREW	2	
- 45	NAS229-8	• SCREW	2	
	AN960D10	• WASHER	2	
		¤----¤-¤-¤----¤		
- 46	AN3436-2-6	• • BLOCK ASSY, TERM.	1	
- 47	AN3436-2-4	• • BLOCK ASSY, TERM.	1	
	AN3433-2-2	• • BUS BAR, USE WITH INDEX 47	2	
- 48	AN3436-2-9	• • BLOCK ASSY, TERM.	1	
	AN3433-2-2	• • BUS BAR, USE WITH INDEX 48	1	
- 49	RW31G400	• • RESISTOR	1	
- 50	RW31G310	• • RESISTOR	1	
- 51	RW31G180	• • RESISTOR	1	
- 52	RW31G100	• • RESISTOR	1	
- 53	RW31G4R0	• • RESISTOR	1	
- 54	AN3-20A	• • BOLT	5	
	AN960D10	• • WASHER	10	
	6000	• • WASHER, CENTERING (OM)	10	
	AN363-1032	• • NUT	5	
- 55	RW30G100	• • RESISTOR	1	
- 56	RW30G250	• • RESISTOR	1	
- 57	RW30G450	• • RESISTOR	1	
- 58	RW30G710	• • RESISTOR	1	
- 59	RW30G111	• • RESISTOR	1	
- 60	AN73-15	• • BOLT	5	
	AN960D10	• • WASHER	5	
	6000	• • WASHER, CENTERING (OM)	10	
	AN960-10	• • WASHER	5	
	AN363-1032	• • NUT	5	
- 61	RW40G280	• • RESISTOR	1	
- 62	RW40G2R0	• • RESISTOR	1	
- 63	AN73-35	• • BOLT	2	
	AN960D10	• • WASHER	2	
	6001	• • WASHER, CENTERING (OM)	4	
	AN970-3	• • WASHER	2	
	AN363-1032	• • NUT	2	
- 64	RW35G120	• • RESISTOR	1	
- 65	AN3-44A	• • BOLT	1	
	AN960D10	• • WASHER	1	
	6001	• • WASHER, CENTERING (OM)	2	
- 66	25-76065- 15	• • PANEL ASSEMBLY, INTERNAL LIGHTS DIMMING RESISTOR	1	
	25-76066- 1	RESISTOR INSTALLATION, WARNING LIGHT DIMMING, SEE FIG. 101-24 FOR NEXT HIGHER ASSEMBLY	REF	A-B
	25-76066-301	RESISTOR INSTALLATION, WARNING LIGHT DIMMING, SEE FIG. 101-24 FOR NEXT HIGHER ASSEMBLY	REF	C-F
- 67	AN3433-2-2	• BUS BAR	1	
- 68	AN3436-2-6	• BLOCK ASSY, TERMINAL	1	C-F
	25-76066- 3	• PANEL ASSEMBLY	1	A-B
	25-76066-303	• PANEL ASSEMBLY	1	C-F
		ATTACHING PARTS		
- 69	AN509-10R11	• SCREW	2	
- 70	AN515-6R5	• SCREW	6	
	AN960-6L	• WASHER	12	
	AN363-632	• NUT	6	
		¤----¤-¤-¤----¤		

FIGURE & INDEX NUMBER	PART NUMBER	1 2 3 4 5 6 7 DESCRIPTION	UNITS PER ASS'Y	USABLE ON CODE
105 - 71	RW35G100	• • RESISTOR	2	
		ATTACHING PARTS		
- 72	AN73-45	• • BOLT	2	
	AN960D10	• • WASHER	2	
	6001	• • WASHER CENTERING (OM)	4	
	AN970-3	• • WASHER	2	
	AN363-1032	• • NUT	2	
		¤----¤-¤-¤----¤		
- 73	RW30G630	• • RESISTOR	1	
		ATTACHING PARTS		
- 74	AN73-15	• • BOLT	1	
	AN960D10	• • WASHER	3	
	AN960-10	• • WASHER	1	
	AN363-1032	• • NUT	1	
		¤----¤-¤-¤----¤		
- 75	25-89024- 7	• • PLACARD, WARNING LIGHTS RESISTORS WIRING DIAGRAM	1	A-B
- 76	25-76058- 1	• • PANEL ASSEMBLY, WARNING LIGHTS DIMMING RESISTORS	1	A-B
	25-76058-301	• • PANEL ASSEMBLY, WARNING LIGHTS DIMMING RESISTORS	1	C-F
- 77	AN253-2-1038	• • • PIN, HINGE	1	
- 78	MS20001PX5-1050	• • • HINGE, HALF	1	
- 79	MS20001PY3-1050	• • • HINGE, HALF	1	A-B
	25-76058- 11	• • • HINGE, HALF, ALTERED FROM GOVERNMENT STANDARD PART NO. MS20001PY3-1050	1	C-F
	25-76073- 1	SWITCH INSTL, EXTERNAL CANOPY, SEE FIG. 101-50 FOR NEXT HIGHER ASSEMBLY	REF	
	25-76073- 3	• SWITCH ASSEMBLY	1	
		ATTACHING PARTS		
- 80	AN509-10R8	• SCREW	4	
	AN960D10L	• WASHER	4	
	AN364-1032	• NUT	4	
		¤----¤-¤-¤----¤		
- 81	1HS1	• • SWITCH, CANOPY OPEN (MCS)	1	
- 82	1HS1	• • SWITCH, CANOPY CLOSED (MCS)	1	
- 83	MBH2731	• • ACTUATOR (MCS)	2	
- 84	25-76076- 3	• • BUTTON, SWITCH ACTUATOR	2	
		ATTACHING PARTS		
- 85	AN392-51	• • PIN, FLAT HEAD	2	
	AN960D4L	• • WASHER	2	
	AN380-2-1	• • PIN, COTTER	2	
		¤----¤-¤-¤----¤		
- 86	25-76077- 5	• • SPRING, SWITCH ACTUATOR	2	
- 87	25-76075- 5	• • BRACKET, SWITCH ACTUATOR	1	
	25-76022- 1	PANEL ASSEMBLY, ARMAMENT FIRE CONTROL, SEE FIG. 101-45 FOR NEXT HIGHER ASSEMBLY	REF	
- 88	R94C550077	• CONTROL, GUNFIRING, ALTERNATE R94BUA51A140, GFP	2	
		ATTACHING PARTS		
- 89	AN515-8R6	• SCREW	4	
		¤----¤-¤-¤----¤		
- 90	NO NUMBER	• POWER SUPPLY, AERO 1B, ALTERNATE AERO 2A, GFP	2	
- 91	926E8	• CLAMP, TUBE (BHE)	2	
		ATTACHING PARTS		
	AN515-8R8	• SCREW	1	A
	AN515-8R20	• SCREW	1	B-F
		¤----¤-¤-¤----¤		
	NAS43-3-48	• SPACER, USE WITH INDEX 91	1	B-F
- 92	5M7-10-7	• PANEL ASSY, ELECTRICAL CONNECTOR (MDA)	1	
- 93	5M8-10-7	• COVER, PANEL ASSEMBLY (MDA)	1	
- 94	AN515-6R6	• SCREW	8	
	AN960-6L	• WASHER	8	
	AN364-632	• NUT	8	
	25-79000-A39	• BUNDLE ASSEMBLY, WIRE	1	
- 95	77M1P8T	• • SOCKET (AMP) POWER SUPPLY	2	
- 96	77M1P8T	• • SOCKET (AMP) GUN FIRE CONTROL	2	
- 97	25-76129- 1	• PANEL ASSEMBLY, ARMAMENT RELAY MOUNTING	1	

FIGURE & INDEX NUMBER	PART NUMBER	1 2 3 4 5 6 7 DESCRIPTION	UNITS PER ASS'Y	USABLE ON CODE
		THIS PAGE INTENTIONALLY BLANK		

Center Fuselage

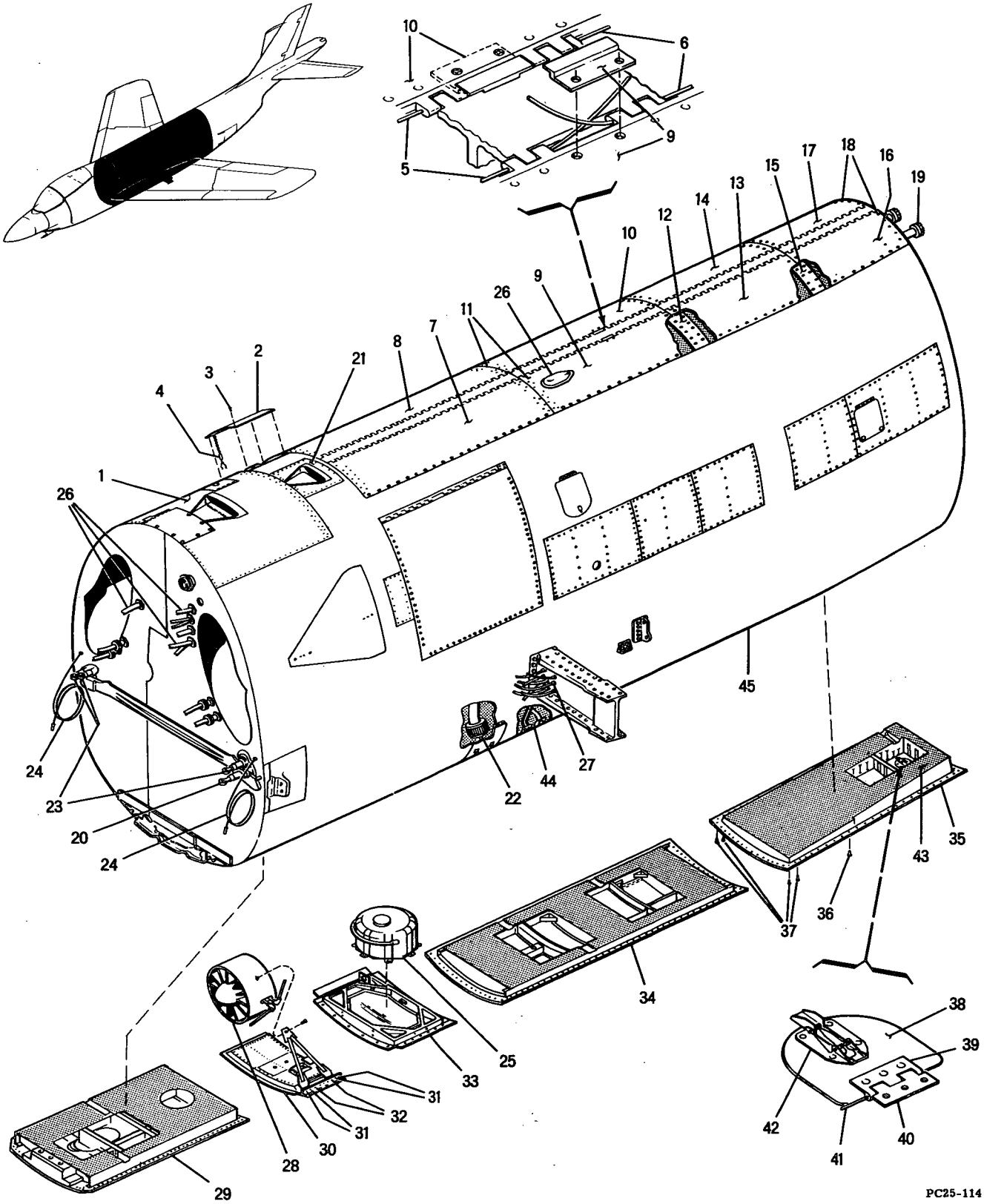

Figure 106 - Center Section Fuselage Assembly

FIGURE & INDEX NUMBER	PART NUMBER	1 2 3 4 5 6 7 DESCRIPTION	UNITS PER ASS'Y	USABLE ON CODE
106 -	25-32001- 1	FUSELAGE ASSEMBLY, CENTER SECTION, SEE FIG. 1-10 FOR NEXT HIGHER ASSY	1	A-B
	25-32001-301	FUSELAGE ASSEMBLY, CENTER SECTION, SEE FIG. 1-10 FOR NEXT HIGHER ASSY	1	C
	25-32001-307	FUSELAGE ASSEMBLY, CENTER SECTION, SEE FIG. 1-10 FOR NEXT HIGHER ASSY	1	D-F
- 1	25-32011- 1	• DOOR ASSY, HYDRAULIC COMPARTMENT ACCESS, SEE FIG. 112	1	A-C
		ATTACHING PARTS		
	AN509-10R13	• SCREW	46	
	AN509-416R13	• SCREW	78	
	AN509-516R16	• SCREW	5	
		¤----¤-¤-¤----¤		
- 2	25-32026- 1	• DOOR ASSY, HYDRAULIC DISCONNECT ACCESS RH	1	A-C
		ATTACHING PARTS		
- 3	AN509-10R12	• SCREW	75	
		¤----¤-¤-¤----¤		
- 4	25-32214- 1	• • CHAIN ASSY, CENTER FUSELAGE ACCESS DOOR	1	
	RS102	• • • LINK (RYY)	1	
	RS109	• • • SWIVEL (RYY)	1	
	NAF1088-1A4	• • • CHAIN	1	
- 5	AN253-5-7780	• PIN, HINGE, FWD	2	
- 6	AN253-5-7580	• PIN, HINGE, AFT	2	
- 7	25-32014- 1	• DOOR ASSY, ELEC EQUIPMENT & HYD LINES ACCESS LH, SEE FIG. 111	1	A-C
- 8	25-32014- 2	• DOOR ASSY, ELEC EQUIPMENT & HYD LINES ACCESS RH, SEE FIG. 111	1	A-C
		ATTACHING PARTS		
	AN509-416R14	• SCREW	66	
	AN509-516R18	• SCREW	16	
		¤----¤-¤-¤----¤		
- 9	25-32014- 3	• DOOR ASSY, ELEC EQUIPMENT & HYD LINES ACCESS LH, FOR FUTURE PROCUREMENT USE 25-32014-301, SEE FIG. 111	1	A-C
	25-32014-301	• DOOR ASSY, ELEC EQUIPMENT & HYD LINES ACCESS LH, USE FOR FUTURE PROCUREMENT TO REPLACE 25-32014-3, SEE FIG. 111	1	
- 10	25-32014- 4	• DOOR ASSY, ELEC EQUIPMENT & HYD LINES ACCESS RH, FOR FUTURE PROCUREMENT USE 25-32014-302, SEE FIG. 111	1	A-C
	25-32014-302	• DOOR ASSY, ELEC EQUIPMENT & HYD LINES ACCESS RH, USE FOR FUTURE PROCUREMENT TO REPLACE 25-32014-4, SEE FIG. 111	1	
		ATTACHING PARTS		
- 11	AN509-416R13	• SCREW	22	
		¤----¤-¤-¤----¤		
- 12	25-32014- 93	• STRAP ASSY, ELEC EQUIPMENT & HYD LINES ACCESS LH, SEE FIG. 111	1	
	25-32014- 94	• STRAP ASSY, ELEC EQUIPMENT & HYD LINES ACCESS RH, SEE FIG. 111	1	
- 13	25-32014- 5	• DOOR ASSY, ELEC EQUIPMENT & HYD LINES ACCESS LH, SEE FIG. 111	1	
- 14	25-32014- 6	• DOOR ASSY, ELEC EQUIPMENT & HYD LINES ACCESS RH, SEE FIG. 111	1	
- 15	25-32014- 9	• STRAP ASSY, ELEC EQUIPMENT & HYD LINES ACCESS LH, SEE FIG. 111	1	
	25-32014- 10	• STRAP ASSY, ELEC EQUIPMENT & HYD LINES ACCESS RH, SEE FIG. 111	1	
- 16	25-32014- 7	• DOOR ASSY, ELEC EQUIPMENT & HYD LINES ACCESS LH, SEE FIG. 111	1	
- 17	25-32014- 8	• DOOR ASSY, ELEC EQUIPMENT & HYD LINES ACCESS RH, SEE FIG. 111	1	
		ATTACHING PARTS		
- 18	AN509-416R13	• SCREW	8	
		¤----¤-¤-¤----¤		
- 19	25-58000-301	• SYSTEM INSTL, FUSELAGE FUEL, SEE FIG. 118	1	A-B
	25-58000-303	• SYSTEM INSTL, FUSELAGE FUEL, SEE FIG. 118	1	C
	25-58000-309	• SYSTEM INSTL, FUSELAGE FUEL, SEE FIG. 118	1	D-F
- 20	25-54110- 1	• CONTROLS INSTL, CENTER FUSELAGE ENGINE, SEE FIG. 117	1	A-B
	25-54110-303	• CONTROLS INSTL, CENTER FUSELAGE ENGINE, SEE FIG. 117	1	C
	25-54110-301	• CONTROLS INSTL, CENTER FUSELAGE ENGINE, SEE FIG. 117	1	D-F

FIGURE & INDEX NUMBER	PART NUMBER	1 2 3 4 5 6 7 DESCRIPTION	UNITS PER ASS'Y	USABLE ON CODE
106 - 21	25-56000- 1	. COOLING INSTL, ACCESSORY, SEE FIG. 125	1	A-B
	25-56000-303	. COOLING INSTL, ACCESSORY, SEE FIG. 125	1	C
	25-56000-301	. COOLING INSTL, ACCESSORY, SEE FIG. 125	1	D-F
- 22	25-52000- 1	. DUCT INSTL, ENGINE STARTER AIR, SEE FIG. 126	1	A-C
	25-52001- 1	. DUCT INSTL, ENGINE STARTER AIR, SEE FIG. 126	1	D-F
- 23	25-61200- 1	. CONTROLS INSTL, CENTER FUSELAGE SURFACE, SEE FIG. 116	1	
- 24	25-68102- 1	. CONTROLS INSTL, CENTER FUS AUXILIARY, SEE FIG. 115	1	
- 25	25-77000- 1	. EQUIPMENT INSTL, CENTER FUS ELECTRICAL, SEE FIG. 136	1	
- 26	25-77001- 1	. WIRING INSTL, CENTER FUS ELECTRICAL, SEE FIG. 137	1	
- 27	25-69099- 1	. HYDRAULIC INSTL, CENTER FUSELAGE, SEE FIG. 130, 131, 132, 133 & 135	1	A
	25-69099-301	. HYDRAULIC INSTL, CENTER FUSELAGE, SEE FIG. 130, 131, 132, 133 & 135	1	B
	25-69098-901	. HYDRAULIC INSTL, ELECTRO PUMP, SEE FIG. 128	1	A
	25-69098- 1	. HYDRAULIC INSTL, RAM AIR PUMP, SEE FIG. 129	1	B
- 28	25-69098-301	. HYDRAULIC INSTL, RAM AIR PUMP, SEE FIG. 129	1	C-F
- 29	25-32007- 1	. DOOR ASSY, FWD FUEL CELL ACCESS, SEE FIG. 114	1	A
	25-32007-301	. DOOR ASSY, FWD FUEL CELL ACCESS, SEE FIG. 114	1	B-F
		ATTACHING PARTS, SEE FIG. 114 FOR LOCATION		
	25-32028-301	. DOOR ASSY, RAM AIR PUMP ACCESS, SEE FIG. 113	1	A
- 30	25-32028- 1	. DOOR ASSY, RAM AIR PUMP ACCESS, SEE FIG. 113	1	B-F
		ATTACHING PARTS		
- 31	AN4-14A	. BOLT	4	
	AN960D416L	. WASHER	4	
	AN960D416	. WASHER	4	
	AN365-428	. NUT	4	
- 32	AN4-14A	. BOLT	5	
	AN960D416L	. WASHER	5	
	AN960D416	. WASHER	10	
	AN365-428	. NUT	5	
		¤----¤-¤-¤----¤		
- 33	25-32008- 1	. DOOR ASSY, ENGINE LOWER ACCESS, SEE FIG. 113	1	A
	25-32008-301	. DOOR ASSY, ENGINE LOWER ACCESS, SEE FIG. 113	1	B-F
- 34	25-32009- 1	. DOOR ASSY, CENTER FUEL CELL ACCESS, SEE FIG. 114	1	A
	25-32009-301	. DOOR ASSY, CENTER FUEL CELL ACCESS, SEE FIG. 114	1	B-F
		ATTACHING PARTS		
	AN509-416R12	. SCREW	25	
	AN509-516R17	. SCREW	66	
		¤----¤-¤-¤----¤		
- 35	25-32010- 1	. DOOR ASSY, AFT FUEL CELL ACCESS	1	A
	25-32010-301	. DOOR ASSY, AFT FUEL CELL ACCESS	1	B-F
		ATTACHING PARTS		
- 36	AN509-416R12	. SCREW	66	
- 37	AN509-516R15	. SCREW	4	
		¤----¤-¤-¤----¤		
- 38	25-32010- 63	. . DOOR	1	
- 39	25-32010- 65	. . HINGE, HALF, ALTERED FROM GOVT STANDARD PART NO. MS20001PY4-200	1	
- 40	25-32010- 67	. . HINGE, HALF, ALTERED FROM GOVT STANDARD PART NO. MS20001PX4-200	1	
- 41	AN253-2-190	. . PIN, HINGE	1	
- 42	H5000-2-051-115	. . LATCH (HWL)	1	
- 43	25-58066- 29	. . BACKING ASSEMBLY FUSELAGE AFT FUEL TANK	1	
- 44	25-58014-301	. DRAINS INSTL, ENGINE, SEE FIG. 123	1	A-B
	25-58014-303	. DRAINS INSTL, ENGINE, SEE FIG. 123	1	C
- 45	25-32002- 1	. FUSELAGE ASSY, CENTER STRUCTURAL, SEE FIG. 107	1	A
	25-32002-301	. FUSELAGE ASSY, CENTER STRUCTURAL, SEE FIG. 107	1	B
	25-32002-303	. FUSELAGE ASSY, CENTER STRUCTURAL, SEE FIG. 107	1	C
	25-32002-309	. FUSELAGE ASSY, CENTER STRUCTURAL, SEE FIG. 107	1	D-F

FIGURE & INDEX NUMBER	PART NUMBER	1 2 3 4 5 6 7 DESCRIPTION	UNITS PER ASS'Y	USABLE ON CODE
107 -	25-32002- 1	FUSELAGE ASSEMBLY, CENTER STRUCTURAL, SEE FIG. 106-45 FOR NEXT HIGHER ASSY	REF	A
	25-32002-301	FUSELAGE ASSEMBLY, CENTER STRUCTURAL, SEE FIG. 106-45 FOR NEXT HIGHER ASSY	REF	B
	25-32002-303	FUSELAGE ASSEMBLY, CENTER STRUCTURAL, SEE FIG. 106-45 FOR NEXT HIGHER ASSY	REF	C
	25-32002-309	FUSELAGE ASSEMBLY, CENTER STRUCTURAL, SEE FIG. 106-45 FOR NEXT HIGHER ASSY	REF	D-F
- 1	25-32225- 3	. STUD, FUSELAGE STATION 232.4 SPLICE	2	
	32-1452-064	. NUT, BARREL (EN) USE WITH INDEX 1	2	
	98479	. RETAINER (EN) USE WITH INDEX 1	2	
- 2	25-32153- 6	. FITTING, FWD FUEL CELL DOOR ATTACHMENT RH	1	
- 3	25-32127- 3	. BUSHING, WING FRONT SPAR FUSELAGE ATTACHMENT	4	
- 4	25-58192- 3	. GASKET, FWD FUEL TANK SCUPPER	2	
- 5	25-58154- 1	. SCUPPER ASSY, FWD FUEL TANK	1	
- 6	25-32204- 3	. SUPPORT, FORWARD FUEL TANK SCUPPER	1	
- 7	25-32226- 1	. COVER ASSY, CENTER FUSELAGE HOIST FITTING	1	
- 8	3F5-170-8	. . STUD (MKL) USE WITH 99833P.130 RECEPTACLE (MKL)	1	
- 9	295018	. . WASHER, SPLIT (MKL)	1	
- 10	99836	. . PIN, CROSS (MKL)	1	
- 11	25-32295- 5	. . SPRING, CENTER FUSELAGE HOIST FITTING COVER	1	
- 12	25-32268- 1	. TROUGH ASSY, HYD & ELEC COMPARTMENT DOOR HINGE DRAIN LH	1	A-C
- 13	25-32268- 2	. TROUGH ASSY, HYD & ELEC COMPARTMENT DOOR HINGE DRAIN RH	1	A-C
	25-32132-301	. BEAM ASSY, WATER LINE 22.0	1	A
	25-32132- 1	. BEAM ASSY, WATER LINE 22.0	1	B-C
- 14	25-68137- 1	. . SUPPORT ASSY, EXTERNAL STORES EMER RELEASE PULLEY BKT	1	
	25-32240-301	. WELL ASSY, EMERGENCY RAM AIR PUMP	1	A
	25-32240- 1	. WELL ASSY, EMERGENCY RAM AIR PUMP	1	B-F
- 15	2182-7	. . RECEPTACLE, STOWAGE (CED)	1	D-F
- 16	9M79-33B2014	. . STRIP, SEALING (MDA)	1	
- 17	9M79-31B1112	. STRIP, SEALING (MDA)	1	
	25-32244- 1	. SHELF ASSY, PUMP AND BATTERY SUPPORT	1	A
- 18	25-32298- 3	. . BOLT, RAM AIR PUMP DOOR CLOSURE	1	A
- 19	4M36-02031	. . WASHER (MDA)	1	A
- 20	AN365-524	. . NUT	1	A
	25-11185- 1	. SUPPORT ASSY, FUSELAGE INNER TANK LH	1	
	25-11185- 2	. SUPPORT ASSY, FUSELAGE INNER TANK RH	1	
- 21	25-32320- 1	. ROD ASSEMBLY, RAM AIR PUMP DOOR BRACE	1	B-F
- 22	W98292-8-.800	. . STUD (MKL) USE WITH 99947P.130 RECEPTACLE (MKL)	2	
	99836	. . PIN, CROSS (MKL)	2	
	AN960D516	. . WASHER	2	
- 23	AN743-12	. . BRACKET, CLAMP	1	
- 24	25-32320- 5	. . CABLE	1	
	AN664-2	. . TERMINAL, CABLE	2	
	AN960D8	. . WASHER	1	
- 25	25-58181- 3	. . CLIP, WING TANK SUPPORT	7	
- 26	25-32314- 3	. BOLT, FUSELAGE CARRY THRU SPLICE	2	A
	25-32314- 5	. BOLT, FUSELAGE CARRY THRU SPLICE	2	B-F
	NAS143-14C	. WASHER	2	
	AN960D1416L	. WASHER	2	
	AN364-1414	. NUT	2	
- 27	25-32314- 3	. BOLT, FUSELAGE CARRY THRU SPLICE	2	
	NAS143-14C	. WASHER	2	
	AN960D1416	. WASHER	4	
	AN960D1416L	. WASHER	2	
	AN364-1414	. NUT	2	
- 28	25-11017- 3	. BUSHING, WING REAR SPAR FUSELAGE ATTACHMENT, ALTERNATE 25-11017-5 OR 25-11017-7	4	
	25-32006- 1	. SKIN ASSY, ENGINE COMPARTMENT FUEL CELL INNER	1	
	25-32203- 1	. . PAN ASSY, NEGATIVE G PUMP SUPPORT	1	
- 29	GRA725-16H32	. . . FLANGE (NEUS)	1	
		ATTACHING PARTS		
	AN509-10R4	. . . SCREW	4	
		¤----¤-¤-¤----¤		
- 30	25-58076- 7	. . . GASKET, FUEL SYSTEM	1	
- 31	25-32203- 3	. . . PAN	1	
- 32	25-32003- 1	. PANEL ASSY, CENTER FUSELAGE, LEFT SIDE, SEE FIG. 108	1	A
	25-32003-301	. PANEL ASSY, CENTER FUSELAGE, LEFT SIDE, SEE FIG. 108	1	B
	25-32003-303	. PANEL ASSY, CENTER FUSELAGE, LEFT SIDE, SEE FIG. 108	1	C
	25-32003-305	. PANEL ASSY, CENTER FUSELAGE, LEFT SIDE, SEE FIG. 108	1	D-F

Center Fuselage

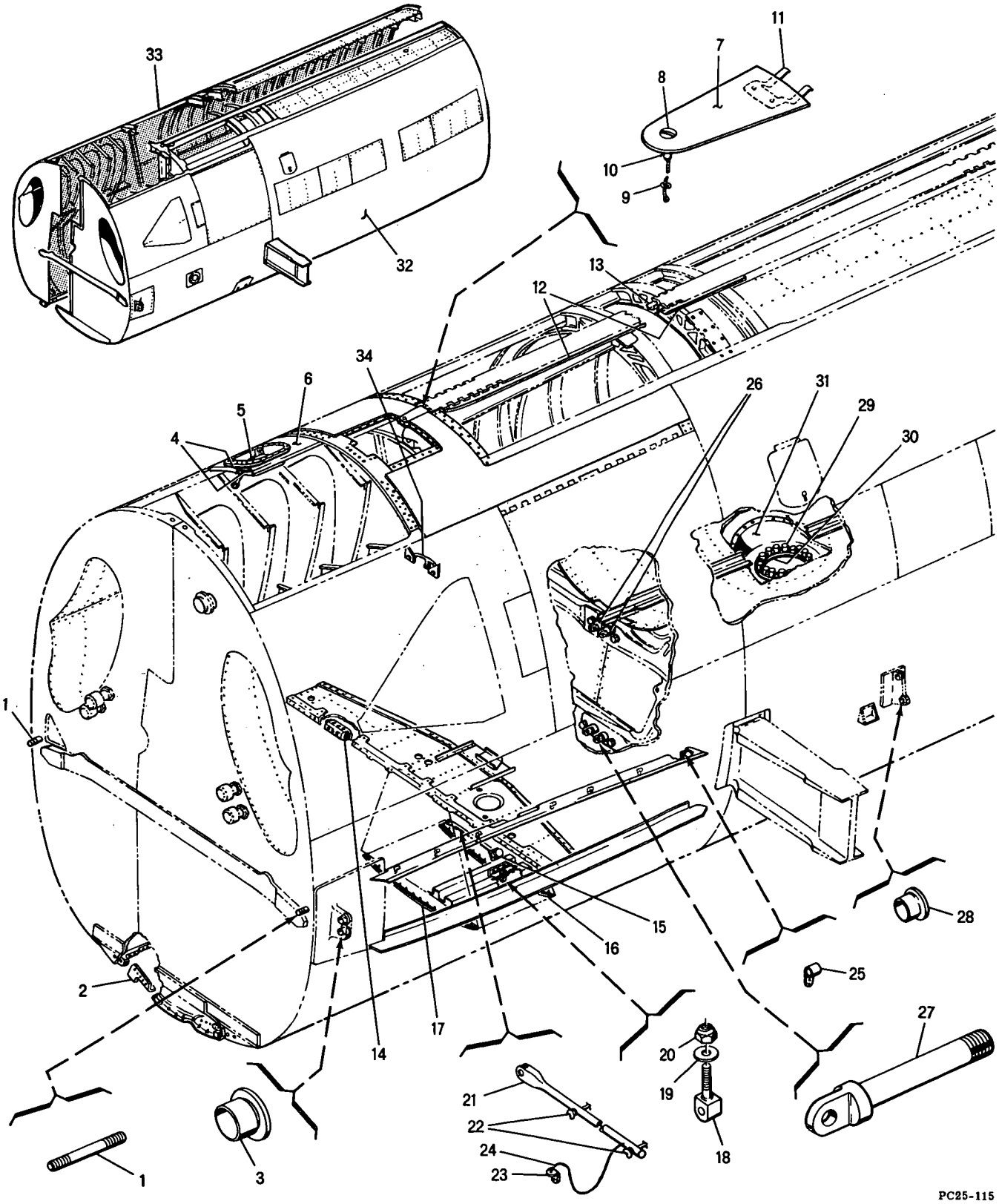

Figure 107 -- Center Structural Fuselage Assembly

FIGURE & INDEX NUMBER	PART NUMBER	1 2 3 4 5 6 7 DESCRIPTION	UNITS PER ASS'Y	USABLE ON CODE
107 - 33	25-32004- 1	• PANEL ASSY, CENTER FUSELAGE, RIGHT SIDE, SEE FIG. 109	1	A
	25-32004-301	• PANEL ASSY, CENTER FUSELAGE, RIGHT SIDE, SEE FIG. 109	1	B
	25-32004-303	• PANEL ASSY, CENTER FUSELAGE, RIGHT SIDE, SEE FIG. 109	1	C
	25-32004-305	• PANEL ASSY, CENTER FUSELAGE, RIGHT SIDE, SEE FIG. 109	1	D-F
- 34	25-58280- 1	• MANIFOLD ASSEMBLY, DRAIN WELDED	1	B-F
	AN818-8D	• • NUT	1	
	AN819-8	• • SLEEVE	1	

Center Fuselage

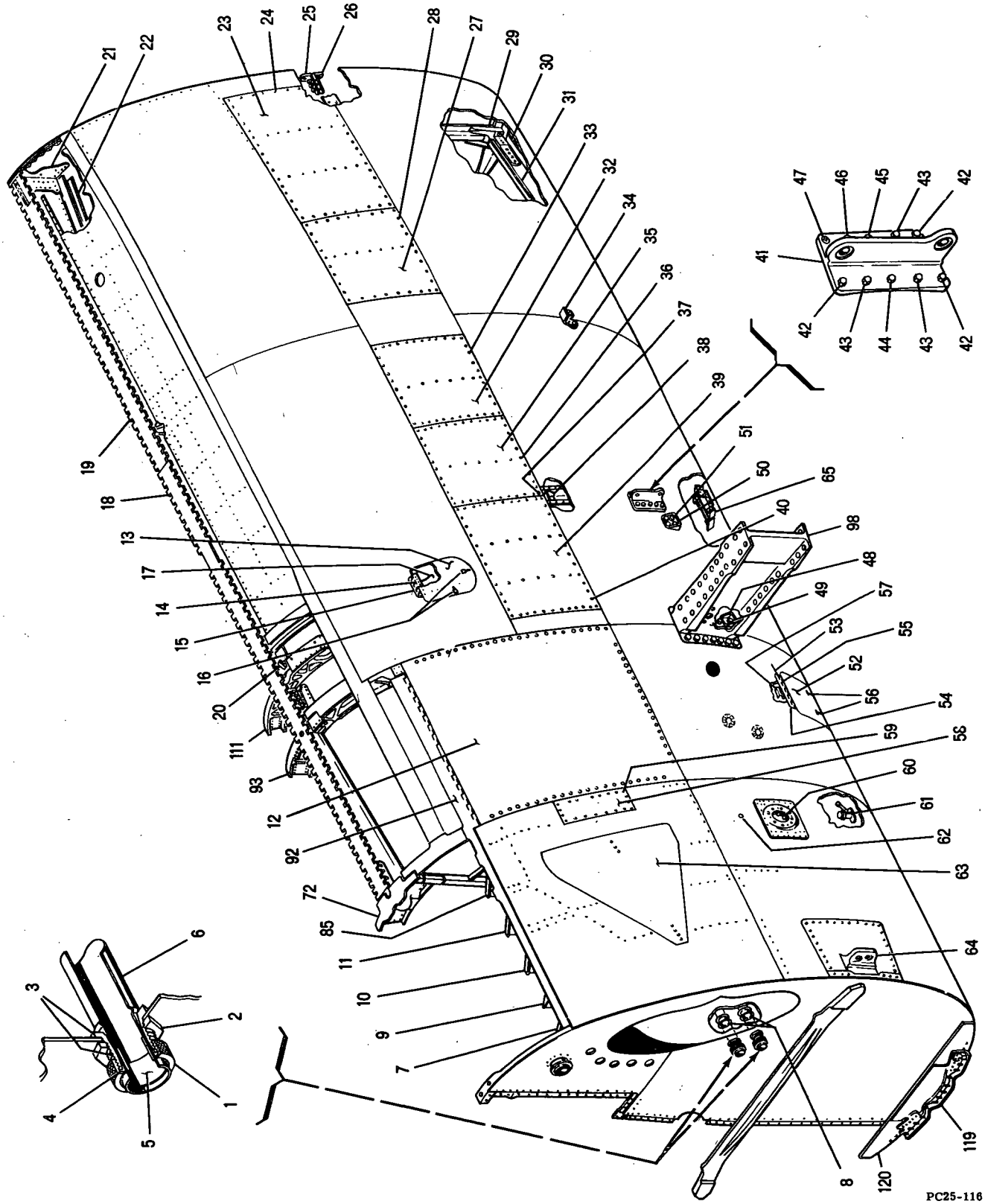

Figure 108 -- Center Fuselage Left Side Panel Assembly (Sheet 1 of 2)

FIGURE & INDEX NUMBER	PART NUMBER	1 2 3 4 5 6 7 DESCRIPTION	UNITS PER ASS'Y	USABLE ON CODE
108 -	25-32003- 1	PANEL ASSEMBLY, CENTER FUSELAGE, LEFT SIDE, SEE FIG. 107-32 FOR NEXT HIGHER ASSY	REF	A
	25-32003-301	PANEL ASSEMBLY, CENTER FUSELAGE, LEFT SIDE, SEE FIG. 107-32 FOR NEXT HIGHER ASSY	REF	B
	25-32003-303	PANEL ASSEMBLY, CENTER FUSELAGE, LEFT SIDE, SEE FIG. 107-32 FOR NEXT HIGHER ASSY	REF	C
	25-32003-305	PANEL ASSEMBLY, CENTER FUSELAGE, LEFT SIDE, SEE FIG. 107-32 FOR NEXT HIGHER ASSY	REF	D-F
	25-77004- 1	. CONDUIT INSTL, CENTER FUSELAGE LH	1	
- 1	AN3054-20	. . NUT	2	
- 2	AN3066-20	. . NUT	2	
- 3	AN3064-20	. . COUPLING	2	
- 4	AN3053-20	. . FERRULE	2	
	25-77065- 3	. . LINER, POLYETHYLENE CONDUIT	2	
- 5	25-77065- 3	. . LINER, POLYETHYLENE CONDUIT	2	A-B
	25-77091- 3	. . LINER, POLYETHYLENE CONDUIT	2	C-F
- 6	25-77073- 3	. . CONDUIT, ELECTRICAL CABLE	2	
- 7	25-32053- 1	. FRAME ASSEMBLY, FUSELAGE STATION 236.9 LH	1	
	25-77077- 1	. . EYELET, CONDUIT GUIDE	2	
- 8	25-77077- 3	. . . FERRULE	1	
- 9	25-32054- 1	. FRAME ASSEMBLY, FUSELAGE STATION 246.1 LH	1	
	25-77077- 1	. . EYELET, CONDUIT GUIDE	2	
	25-77077- 3	. . . FERRULE	1	
- 10	25-32055- 1	. FRAME ASSEMBLY, FUSELAGE STATION 255.3 LH	1	A-C
	25-32055-301	. FRAME ASSEMBLY, FUSELAGE STATION 255.3 LH	1	D-F
	25-77077- 1	. . EYELET, CONDUIT GUIDE	2	
	25-77077- 3	. . . FERRULE	1	
- 11	25-32056- 1	. FRAME ASSEMBLY, FUSELAGE STATION 264.5 LH	1	A-C
	25-32056-301	. FRAME ASSEMBLY, FUSELAGE STATION 264.5 LH	1	D-F
	25-77077- 1	. . EYELET, CONDUIT GUIDE	2	
	25-77077- 3	. . . FERRULE	1	
- 12	25-32012- 1	. DOOR ASSY, ENG ACCESSORY COMPT ACCESS LH, SEE FIG. 112	1	
	AN253-5-1331	. PIN, HINGE, FORWARD	1	
	AN253-5-1728	. PIN, HINGE, AFT	1	
	25-32210- 1	. DOOR ASSEMBLY, ANTI-ICING EXHAUST DISCONNECT ACCESS LH	1	
- 13	25-32210- 3	. . DOOR ASSEMBLY LH	1	
	AN253-5-388	. . . PIN, HINGE	1	
- 14	25-32210- 21	. . . HINGE, HALF, ALTERED FROM 9M27HY1A400 (MDA)	1	
- 15	25-32210- 19	. . . HINGE, HALF, ALTERED FROM 9M27HX3A400 (MDA)	1	
- 16	H5100-125-330	. . . LATCH (HWL)	2	
- 17	15-11203	. . SPRING ASSY, FUEL FILLER DOOR	1	
	15-11203- 3	. . . SPRING	1	
		ATTACHING PARTS		
	AN393-43	. . . PIN, FLAT HEAD	1	
	NAS43-3-76	. . . SPACER	1	
	AN380-2-2	. . . PIN, COTTER	1	
		¤----¤-¤-¤----¤		
	15-11203- 5	. . . CLIP	1	
	25-32108- 1	. LONGERON ASSY, ENGINE REMOVAL TRACK	1	
- 18	25-32091- 3	. . LONGERON, CENTER FUSELAGE UPPER CENTER	1	
- 19	25-32108- 9	. . LONGERON, CENTER FUSELAGE UPPER AFT	1	
- 20	19-51047- 3	. . SPRING, SKATE RESTRAINING	1	
- 21	25-32084- 3	. . FITTING, CENTER FUS UPPER LONGN SPLICE AFT	1	
	25-32172- 5	. . BUSHING, LONGN AFT SPLICE FITTING CLAMP UP	4	
- 22	25-32108- 87	. . TRACK, ENGINE REMOVAL	1	
	25-32023- 1	. DOOR ASSY, FUEL SYSTEM & CONTROL SYS ACCESS, LEFT SIDE	1	
- 23	25-32023- 7	. . DOOR ASSEMBLY	1	
		ATTACHING PARTS		
- 24	AN509-416R13	. . SCREW	58	
		¤----¤-¤-¤----¤		
	25-32082- 1	. BEAM ASSY, FUS STA 310.0 TO FUS STA 434.0 LH	1	A-C
	25-32082-301	. BEAM ASSY, FUS STA 310.0 TO FUS STA 434.0 LH	1	D-F
- 25	25-32309- 3	. . FITTING, CENTER FUS CENTER LONGN AFT SPLICE UPPER LH, ALTERNATE 25-32086-5	1	
- 26	25-32310- 1	. . FITTING ASSEMBLY, CENTER FUSELAGE CENTER LONGERON AFT SPLICE LOWER LH, ALTERNATE 25-32150-1	1	
	25-32023- 5	. DOOR ASSY, IGNITER PLUG ACCESS, LEFT SIDE	1	
- 27	25-32023- 11	. . DOOR ASSEMBLY	1	
		ATTACHING PARTS		
- 28	AN509-416R13	. . SCREW	41	
		¤----¤-¤-¤----¤		
- 29	25-32089- 3	. FITTING, CENTER FUSELAGE LOWER LONGERON AFT LH	1	

Center Fuselage

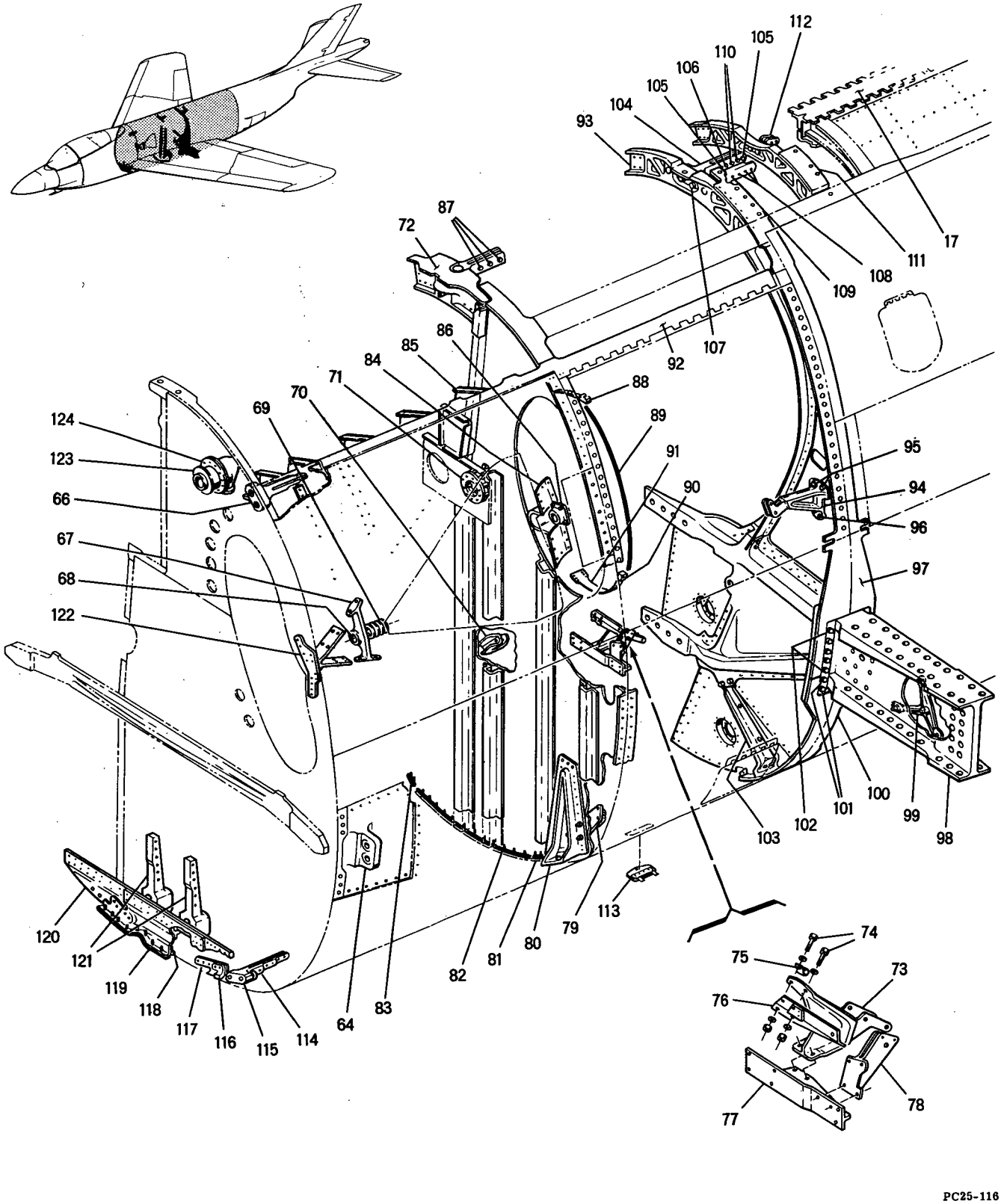

Figure 108 -- Center Fuselage Left Side Panel Assembly (Sheet 2 of 2)

FIGURE & INDEX NUMBER	PART NUMBER	1 2 3 4 5 6 7 DESCRIPTION	UNITS PER ASS'Y	USABLE ON CODE
108 -	25-32172- 3	• BUSHING, LONGERON FITTING CLAMP UP, USE WITH INDEX 29	1	
	25-32094- 1	• LONGERON ASSEMBLY, CENTER FUSELAGE LOWER LH	1	
- 30	25-32094- 3	• • LONGERON LH	1	
- 31	25-32177- 3	• • STIFFENER, CENTER FUSELAGE LOWER LONGN LH	1	
	25-32022- 3	• DOOR ASSY, STABILATOR BELL CRANK ACCESS LH	1	A-B
	25-32324- 1	• DOOR ASSY, STABILATOR BELL CRANK ACCESS LH	1	C-F
- 32	25-32022- 7	• • DOOR ASSEMBLY, LH	1	A-B
	25-32324- 25	• • DOOR ASSEMBLY, LH	1	C-F
		ATTACHING PARTS		
- 33	AN509-416R13	• • SCREW	46	
		¤----¤-¤-¤----¤		
- 34	25-32151- 3	• FITTING, TRAILING EDGE FLAP UP STOP FUS LH	1	
	25-32018- 13	• DOOR ASSEMBLY, AFTERBURNER INTERIM CONTROL ADJUSTMENT LH	1	
- 35	25-32018- 15	• • DOOR ASSEMBLY, LH	1	
		ATTACHING PARTS		
- 36	AN509-416R13	• • SCREW	46	
- 37	AN509-10R14	• • SCREW	1	
		¤----¤-¤-¤----¤		
	25-32067- 1	• RING ASSEMBLY, FUSELAGE STATION 340.4 LH	1	A-C
- 38	25-32182- 3	• • FITTING, CAP SPLICE	1	
	25-32022- 1	• DOOR ASSEMBLY, FUEL PILOT VALVE ACCESS LH	1	
- 39	25-32022- 5	• • DOOR ASSEMBLY	1	
		ATTACHING PARTS		
- 40	AN509-416R13	• • SCREW	61	
		¤----¤-¤-¤----¤		
- 41	25-32328- 1	• FITTING ASSEMBLY, WING REAR SPAR FUSELAGE ATTACHMENT LH	1	
		ATTACHING PARTS		
- 42	AN4-10A	• BOLT	3	
	AN960D416L	• WASHER	3	
	AN960D416	• WASHER	3	
	AN365-428	• NUT	3	
- 43	AN4-7A	• BOLT	3	
	AN960D416L	• WASHER	3	
	AN960D416	• WASHER	3	
	AN365-428	• NUT	3	
- 44	AN4-7A	• BOLT	1	
	AN960D416L	• WASHER	1	
	AN960D416	• WASHER	2	
	AN365-428	• NUT	1	
- 45	AN509-416R14	• SCREW	1	
	AN960D416	• WASHER	1	
	AN365-428	• NUT	1	
- 46	AN509-416R15	• SCREW	1	
	AN960D416	• WASHER	1	
	AN365-428	• NUT	1	
- 47	AN509-416R16	• SCREW	1	
	AN960D416	• WASHER	1	
	AN365-428	• NUT	1	
		¤----¤-¤-¤----¤		
	25-32116- 1	• FITTING INSTL, MAIN LG DOOR HINGE BACK UP LH	1	
- 48	25-32114- 3	• • FITTING, MAIN LG DOOR HINGE BACK UP FWD LH	1	
		ATTACHING PARTS		
- 49	NAS464-8A18	• • BOLT	1	
	AN960-816L	• • WASHER	1	
	25-32297- 3	• • WASHER, CENTER FUSELAGE SOFT ALUMINUM	2	
	AN960-816	• • WASHER	1	
	AN364-820	• • NUT	1	
		¤----¤-¤-¤----¤		
- 50	25-32113- 3	• • FITTING, MAIN LG DOOR HINGE BACK UP AFT LH	1	
		ATTACHING PARTS		
- 51	AN4-7A	• • BOLT	4	
	AN960D416	• • WASHER	8	
	AN365-428	• • NUT	4	
		¤----¤-¤-¤----¤		
- 52	25-32027- 1	• DOOR ASSEMBLY, ENGINE STARTER AIR	1	
- 53	AN253-5-638	• • PIN, HINGE	1	
- 54	25-32027- 7	• • HINGE, HALF, ALTERED FROM 9M83HX4A650 (MDA)	1	
- 55	25-32027- 5	• • HINGE, HALF, ALTERED FROM 9M83HY4A650 (MDA)	1	
- 56	H5000-2-064-102	• • LATCH (HWL)	2	
	25-32274- 1	• PAN ASSY, ENGINE STARTER AIR INTAKE SUPPORT	1	
- 57	25-32157- 3	• • SPRING, ENGINE STARTER AIR DOOR	1	

FIGURE & INDEX NUMBER	PART NUMBER	1 2 3 4 5 6 7 DESCRIPTION	UNITS PER ASS'Y	USABLE ON CODE
108 -		ATTACHING PARTS		
	AN392-67	• • PIN, FLAT HEAD	1	
	NAS42C5-118	• • SPACER	1	
	AN960-6	• • WASHER	1	
	AN380-2-1	• • PIN, COTTER	1	
		¤-----¤-¤-¤-----¤		
	25-32029- 1	• DOOR ASSY, ENGINE AIR HYD ACTUATOR ACCESS LH	1	
- 58	25-32029- 3	• • DOOR LH	1	
		ATTACHING PARTS		
- 59	AN509-10R11	• • SCREW	20	
		¤-----¤-¤-¤-----¤		
	25-32134- 1	• SUPPORT ASSY, WING FUEL CELL FUELING PILOT VALVE LH	1	
- 60	GRA350-8H32	• • FLANGE (NEUS)	1	
		ATTACHING PARTS		
	AN509-10R5	• • SCREW	4	
		¤-----¤-¤-¤-----¤		
	25-58076- 15	• • GASKET, FUEL SYSTEM, USE WITH INDEX 60	1	
- 61	25-58279- 1	• TUBE ASSEMBLY, MANIFOLD DRAIN	1	
	AN818-10D	• • NUT	1	
	AN819-10	• • SLEEVE, COUPLING	1	
	AN818-8D	• • NUT	1	
	AN819-8	• • SLEEVE, COUPLING	1	
	AN818-4D	• • NUT	1	
	AN819-4	• • SLEEVE, COUPLING	1	
	25-58207- 1	• RECEPTACLE ASSEMBLY, FUEL NOZZLE GROUNDING	1	
- 62	AN3117-1	• • RECEPTACLE, FUEL NOZZLE GROUNDING	1	
- 63	25-32013- 1	• DOOR ASSY, ENGINE AUX AIR LH, ALTERNATE FOR 25-32013-301, SEE FIG. 110	1	
	25-32013-301	• DOOR ASSY, ENGINE AUX AIR LH, USE FOR FUTURE PROCUREMENT TO REPLACE 25-32013-1, SEE FIG. 110	1	
- 64	25-32139- 3	• FITTING, WING FRONT SPAR ATTACHMENT LH	1	
	25-32099- 1	• SUPPORT ASSEMBLY, AFT PYLON ATTACHMENT	1	
- 65	25-32099- 9	• • COVER	1	
		ATTACHING PARTS		
	AN509-516R13	• • SCREW	1	
		¤-----¤-¤-¤-----¤		
- 66	25-32083- 5	• FITTING, UPPER LONGERON FORWARD SPLICE LH	1	
	25-32171- 3	• BUSHING, UPPER LONGERON FORWARD SPLICE FITTING CLAMP UP, USE WITH INDEX 66	2	
- 67	25-32097- 1	• FITTING ASSY, ENGINE AUXILIARY AIR DOOR FWD SUPPORT LH	1	
	RRT137S	• • RING, RETAINING (RMS)	1	
- 68	BSSR12000G	• • BEARING (SWPC)	1	
	NAS497	• • FITTING, LUB	1	
- 69	AN960-1216L	• WASHER	4	
	25-32057- 1	• BULKHEAD ASSEMBLY, FUSELAGE STATION 277.3 LH	1	A
	25-32057-301	• BULKHEAD ASSEMBLY, FUSELAGE STATION 277.3 LH	1	B
	25-32057-303	• BULKHEAD ASSEMBLY, FUSELAGE STATION 277.3 LH	1	C-F
- 70	25-54108- 3	• • SUPPORT, ENGINE CONTROL BELL CRANK	1	
- 71	GRA350-8H32	• • FLANGE (NEUS)	1	
		ATTACHING PARTS		
	AN509-10R4	• • SCREW	4	
		¤-----¤-¤-¤-----¤		
	25-58076- 15	• • GASKET, FUEL SYSTEM, USE WITH INDEX 71	1	
- 72	25-32106- 1	• • FITTING ASSEMBLY, CENTER FUSELAGE HOIST	1	
	25-32170- 3	• • • BUSHING, CENTER FUSELAGE HOIST FITTING	1	
	52-022-094-1125	• • • PIN, ROLL (EN)	1	
	25-61217- 1	• • BRACKET ASSY, STABILATOR IDLER, LEFT SIDE	1	
- 73	25-61211- 3	• • • BRACKET, STABILATOR IDLER	1	
		ATTACHING PARTS		
- 74	NAS464-4A7	• • • BOLT, UPPER	2	
	AN960D416	• • • WASHER	2	
	AN364-428	• • • NUT	2	
	NAS464-4A5	• • • BOLT, LOWER	2	
	AN960D416L	• • • WASHER	2	
	AN960D416	• • • WASHER	2	
	AN365-428	• • • NUT	2	
		¤-----¤-¤-¤-----¤		
- 75	25-77095- 3	• • • BRACKET, WIRE BUNDLE SUPPORT	1	
- 76	25-61215- 1	• • • ANGLE ASSEMBLY, STABILATOR IDLER BRACKET	1	
- 77	25-61216- 5	• • • TEE, STABILATOR & RUDDER IDLER BRACKET	1	
- 78	25-68122- 3	• • • BRACKET, EXTERNAL STORES EMERGENCY RELEASE PULLEY	1	

FIGURE & INDEX NUMBER	PART NUMBER	1 2 3 4 5 6 7 DESCRIPTION	UNITS PER ASS'Y	USABLE ON CODE
108 - 79	25-68125- 3	• • BRACKET, EXT STORES EMER RELEASE PULLEY	1	
- 80	25-32101- 3	• • FITTING, EXTERNAL STORES SUPPORT LH	1	
- 81	9M79-58A293	• • STRIP, SEALING (MDA)	1	
- 82	9M79-90A1610	• • STRIP, SEALING (MDA)	1	
- 83	25-32057-217	• • SEAL, SELECTED FROM 9M79A (MDA)	1	
	25-32031- 1	• DOOR ASSY, AUX AIR DOOR AFT SUPPORT ACCESS LH	1	
- 84	25-32031- 7	• • DOOR LH	1	
		ATTACHING PARTS		
	AN509-10R11	• • SCREW	16	
		¤----¤-¤-¤----¤		
- 85	25-32058- 1	• FRAME ASSEMBLY, FUSELAGE STATION 272.9 LH	1	
	25-77077- 1	• • EYELET, CONDUIT GUIDE	2	
	25-77077- 3	• • • FERRULE	1	
- 86	25-32163- 1	• • FITTING ASSY, ENGINE AIR DOOR AFT SUP. LH	1	
		ATTACHING PARTS		
	AN4-10A	• • BOLT, INBOARD	2	
	AN960D416L	• • WASHER	2	
	AN960D416	• • WASHER	2	
	AN365-428	• • NUT	2	
	AN4-7A	• • BOLT, OUTBOARD	2	
	AN960D416L	• • WASHER	2	
	AN960D416	• • WASHER	2	
	AN365-428	• • NUT	2	
		¤----¤-¤-¤----¤		
	RRT143S	• • • RING, RETAINING (RMS)	1	
	HSBG12	• • • BEARING (AAAD) ALTERNATE BLN120003G-C (SWPC)	1	
	NAS497	• • • FITTING, LUB	1	
	25-32163- 3	• • • FITTING LH	1	
- 87	25-32173- 3	• BUSHING, FUSELAGE HOIST FITTING CLAMP UP	3	
- 88	15341	• STRAP ASSEMBLY (MAR) DUCT ATTACHMENT UPPER	1	
- 89	25-32003-173	• SEAL, ENGINE AIR DUCT, SELECTED FROM 11M605 (MDA)	1	
	25-32215- 1	• STRAP ASSY, DUCT ATTACHMENT RING LOWER LH	1	
- 90	16198-12-3.125	• • LATCH ASSY (MAR)	1	
- 91	25-32215- 3	• • STRAP LH	1	
	25-32090- 1	• LONGERON ASSY, CENTER FUSELAGE UPPER FWD LH	1	
- 92	25-32090- 3	• • LONGERON LH	1	
	25-32060- 1	• BULKHEAD ASSEMBLY, CANTED FUS STA 310.0 LH	1	A-B
	25-32060-301	• BULKHEAD ASSEMBLY, CANTED FUS STA 310.0 LH	1	C
- 93	25-32109- 3	• • FITTING, CANTED FUS STA 310.0 UPPER	1	
- 94	25-61212- 3	• • BRACKET, STABILATOR BELL CRANK SUPPORT	1	
		ATTACHING PARTS		
- 95	AN4-7A	• • BOLT, UPPER	2	
	AN960PD416L	• • WASHER	2	
	AN960PD416	• • WASHER	4	
	AN365-428	• • NUT	2	
- 96	AN4-10A	• • BOLT, LOWER	2	
	AN960PD416L	• • WASHER	2	
	AN960PD416	• • WASHER	4	
	AN365-428	• • NUT	2	
		¤----¤-¤-¤----¤		
- 97	25-32060- 59	• • CAP, UPPER LH	1	
- 98	25-32141- 3	• • FITTING, WING CARRY THRU	1	
- 99	25-42307- 3	• • FITTING, INBOARD DOOR LINK SUPPORT	1	
		ATTACHING PARTS		
	NAS145-26	• • BOLT	3	
	AN960D516	• • WASHER	3	
		¤----¤-¤-¤----¤		
-100	25-32060- 65	• • CAP, LOWER LH	1	
-101	25-32297- 3	• • WASHER, CENTER FUSELAGE SOFT ALUMINUM	6	
-102	25-32297- 5	• • WASHER, CENTER FUSELAGE SOFT ALUMINUM	20	
-103	25-32104- 3	• • FITTING, EXTERNAL STORES SUPPORT LH	1	
-104	25-32105- 3	• FITTING, FORWARD ENGINE MOUNT SUPPORT	1	
		ATTACHING PARTS		
-105	NAS464-7A18	• BOLT	2	
	AN960D716	• WASHER	4	
	AN364-720	• NUT	2	
-106	NAS464-6A18	• BOLT	1	
	AN960D616	• WASHER	2	
	AN364-624	• NUT	1	
-107	NAS147-32	• BOLT	2	
	AN960D716	• WASHER	2	
	NAS143-7C	• WASHER	2	
	AN365-720	• NUT	2	

FIGURE & INDEX NUMBER	PART NUMBER	1 2 3 4 5 6 7 DESCRIPTION	UNITS PER ASS'Y	USABLE ON CODE
108 -		ATTACHING PARTS (CONT)		
-108	NAS464-6A22	• BOLT, SEE FIG. 124-9	REF	
	AN960D616	• WASHER	REF	
	AN364-624	• NUT	REF	
-109	NAS147-36	• BOLT, SEE FIG. 124-10	REF	
	NAS143-7C	• WASHER	REF	
	AN960D716	• WASHER	REF	
	EB070	• NUT (EN)	REF	
-110	NAS464-6A21	• BOLT	2	
	AN960D616L	• WASHER	2	
	AN960D616	• WASHER	4	
	AN364-624	• NUT	2	
		¤----¤-¤-¤----¤		
	25-32064- 1	• RING ASSEMBLY, FUSELAGE STATION 323.6 LH	1	A-B
	25-32064-301	• RING ASSEMBLY, FUSELAGE STATION 323.6 LH	1	C
-111	25-32065- 3	• • FITTING, RING UPPER	1	A-B
	25-32065- 5	• • FITTING, RING UPPER	1	C
-112	25-32201- 3	• CLIP, UPPER LONGERON TO FUSELAGE STATION 323.6	1	
		ATTACHING PARTS		
	AN5-10A	• BOLT, FWD	1	
	AN960D516L	• WASHER	1	
	AN960D516	• WASHER	1	
	AN364-524	• NUT	1	
	AN4-10A	• BOLT, AFT	1	
	AN960D416L	• WASHER	1	
	AN960D416	• WASHER	1	
	AN364-428	• NUT	1	
		¤----¤-¤-¤----¤		
-113	25-32294- 15	• COVER, EXTERNAL STORES RELEASE	1	
		ATTACHING PARTS		
	AN509-10R10	• SCREW	2	
		¤----¤-¤-¤----¤		
-114	25-32221- 1	• RETAINER ASSY, LOWER LONGERON FORWARD SPLICE FITTING NUT LH	1	
-115	25-32088- 3	• FITTING, LOWER LONGERON FORWARD SPLICE LH	1	
	25-31108- 3	• BUSHING, LOWER LONGN FWD SPLICE FITTING, USE WITH INDEX 115	2	
	25-32051- 1	• BULKHEAD ASSY, CENTER FUS STA 232.4, LEFT SIDE	1	A-C1
	25-32051-301	• BULKHEAD ASSY, CENTER FUS STA 232.4, LEFT SIDE	1	C2-F
-116	25-71208- 3	• • STOP, AMMUNITION ELEVATOR AFT	1	
-117	25-32153- 5	• • FITTING, FWD FUEL CELL DOOR ATTACHMENT LH	1	
	25-32193- 1	• • SEAL ASSY, AMMUNITION ELEVATOR	1	
-118	25-32193- 9	• • • SEAL, SELECTED FROM 9M78B (MDA)	1	
-119	25-32193- 7	• • • SEAL, SELECTED FROM 9M79B (MDA)	1	
-120	25-32184- 3	• • TEE, BULKHEAD SPLICE	1	
-121	25-32111- 3	• • SUPPORT, CATAPULT HOOK	2	
	32-1452-164	• • NUT, BARREL (EN) CATAPULT HOOK, USE WITH INDEX 121	2	A-C1
	98535	• • RETAINER, NUT (MKL) CATAPULT HOOK, USE WITH INDEX 121	2	A-C1
-122	25-32155- 3	• • FITTING, BHD TO ENGINE AIR DOOR BEAMS LH	1	
-123	25-83061- 3	• • ELBOW, ENGINE BLEED AIR	1	
-124	25-83103- 3	• • GASKET, ENGINE BLEED AIR ELBOW	1	
	25-32126- 1	• FAIRING ASSY, ENG AIR DOOR FWD SUPPORT FITTING	1	
	25-32126- 3	• • FAIRING	1	

FIGURE & INDEX NUMBER	PART NUMBER	1 2 3 4 5 6 7 DESCRIPTION	UNITS PER ASS'Y	USABLE ON CODE
109 -	25-32004- 1	PANEL ASSY, CENTER FUSELAGE, RIGHT SIDE, SEE FIG. 107-33 FOR NEXT HIGHER ASSY	REF	A
	25-32004-301	PANEL ASSY, CENTER FUSELAGE, RIGHT SIDE, SEE FIG. 107-33 FOR NEXT HIGHER ASSY	REF	B
	25-32004-303	PANEL ASSY, CENTER FUSELAGE, RIGHT SIDE, SEE FIG. 107-33 FOR NEXT HIGHER ASSY	REF	C
	25-32004-305	PANEL ASSY, CENTER FUSELAGE, RIGHT SIDE, SEE FIG. 107-33 FOR NEXT HIGHER ASSY	REF	D-F
	25-77004- 2	. CONDUIT INSTL, CENTER FUSELAGE RH	1	
- 1	AN3054-20	. . NUT	2	
- 2	AN3066-20	. . NUT	2	
- 3	AN3064-20	. . COUPLING	2	
- 4	AN3053-20	. . FERRULE	2	
	25-77065- 3	. . LINER, POLYETHYLENE CONDUIT	2	
- 5	25-77065- 3	. . LINER, POLYETHYLENE CONDUIT	2	A-B
	25-77091- 3	. . LINER, POLYETHYLENE CONDUIT	2	C-F
- 6	25-77073- 3	. . CONDUIT, ELECTRICAL CABLE	2	
- 7	25-32053- 2	. FRAME ASSEMBLY, FUSELAGE STATION 236.9 RH	1	A-C
	25-32053-302	. FRAME ASSEMBLY, FUSELAGE STATION 236.9 RH	1	D-F
	25-77077- 1	. . EYELET, CONDUIT GUIDE	2	
- 8	25-77077- 3	. . . FERRULE	1	
- 9	25-32054- 2	. FRAME ASSEMBLY, FUSELAGE STATION 246.10 RH	1	A-C
	25-32054-302	. FRAME ASSEMBLY, FUSELAGE STATION 246.10 RH	1	D-F
	25-77077- 1	. . EYELET, CONDUIT GUIDE	2	
	25-77077- 3	. . . FERRULE	1	
- 10	25-32055- 2	. FRAME ASSEMBLY, FUSELAGE STATION 255.3 RH	1	A-C
	25-32055-302	. FRAME ASSEMBLY, FUSELAGE STATION 255.3 RH	1	D-F
	25-77077- 1	. . EYELET, CONDUIT GUIDE	2	
	25-77077- 3	. . . FERRULE	1	
- 11	25-32056- 2	. FRAME ASSEMBLY, FUSELAGE STATION 264.5 RH	1	A-C
	25-32056-302	. FRAME ASSEMBLY, FUSELAGE STATION 264.5 RH	1	D-F
	25-77077- 1	. . EYELET, CONDUIT GUIDE	2	
	25-77077- 3	. . . FERRULE	1	
- 12	25-32013- 2	. DOOR ASSY, ENGINE AUX AIR RH, ALTERNATE FOR 25-32013-302, SEE FIG. 110	1	
	25-32013-302	. DOOR ASSY, ENGINE AUX AIR RH, USE FOR FUTURE PROCUREMENT TO REPLACE 25-32013-2, SEE FIG. 110	1	
	25-32090- 2	. LONGERON ASSY, CENTER FUSELAGE UPPER FWD RH	1	
- 13	25-32090- 4	. . LONGERON RH	1	
- 14	25-32012- 2	. DOOR ASSY, ENGINE UPPER ACCESS RH, SEE FIG. 112	1	
	AN253-5-1331	. PIN, HINGE, FORWARD	1	
	AN253-5-1728	. PIN, HINGE, AFT	1	
	25-32023- 3	. DOOR ASSY, CONTROL SYSTEM ACCESS, RIGHT SIDE	1	
- 15	25-32023- 9	. . DOOR ASSEMBLY	1	
		ATTACHING PARTS		
- 16	AN509-416R13	. . SCREW	59	
- 17	AN509-10R10	. . SCREW	2	
		¤----¤-¤-¤----¤		
- 18	25-32023- 13	. . . DOOR ASSEMBLY, FUEL FILLER ACCESS	1	
- 19	AN253-5-388	. . . . PIN, HINGE	1	
- 20	25-32023- 27	. . . . HINGE, HALF, ALTERED FROM 9M83HY4A400 (MDA)	1	
- 21	25-32023- 35	. . . . HINGE, HALF, ALTERED FROM 9M83HX2A400 (MDA)	1	
	98265-2-.170	. . . . STUD (MKL) USE WITH 99947P.130 RECEPTACLE (MKL)	2	
	99836	. . . . PIN, CROSS (MKL)	2	
	15-11203	. . . SPRING ASSEMBLY, FUEL FILLER DOOR	1	
- 22	15-11203- 3	. . . . SPRING	1	
		ATTACHING PARTS		
- 23	AN393-43	. . . . PIN, FLAT HEAD	1	
	NAS43-3-76	. . . . SPACER	1	
	AN380-2-2	. . . . PIN, COTTER	1	
		¤----¤-¤-¤----¤		
- 24	15-11203- 5	. . . . CLIP	1	
	25-32082- 2	. BEAM ASSY, FUS STA 310.0 TO FUS STA 434.0 RH	1	A-C
	25-32082-302	. BEAM ASSY, FUS STA 310.0 TO FUS STA 434.0 RH	1	D-F
- 25	25-32309- 4	. . FITTING, CENTER FUS CENTER LONGN AFT SPLICE UPPER RH, ALTERNATE 25-32086-6	1	
- 26	25-32310- 2	. . FITTING ASSEMBLY, CENTER FUSELAGE CENTER LONGERON AFT SPLICE LOWER RH, ALTERNATE 25-32150-2	1	
	25-32023- 6	. DOOR ASSY, IGNITER PLUG ACCESS RH	1	
- 27	25-32023- 12	. . DOOR ASSY RH	1	

Center Fuselage

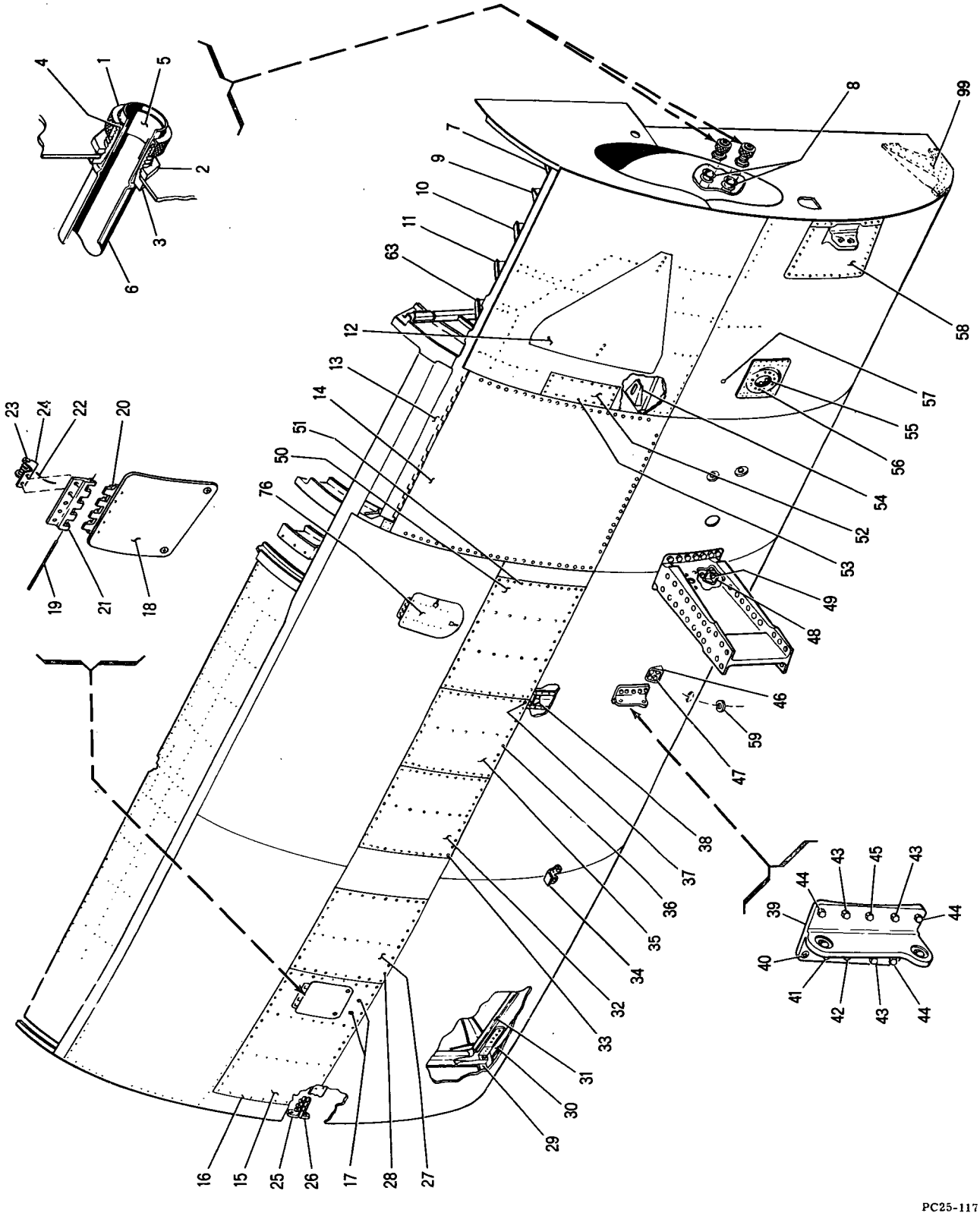

Figure 109 -- Center Fuselage Right Side Panel Assembly (Sheet 1 of 2)

FIGURE & INDEX NUMBER	PART NUMBER	1 2 3 4 5 6 7 DESCRIPTION	UNITS PER ASS'Y	USABLE ON CODE
109 -		ATTACHING PARTS		
- 28	AN509-416R13	• • SCREW	41	
		¤----¤-¤-¤----¤		
- 29	25-32089- 4	• FITTING, CENTER FUSELAGE LOWER LONGERON AFT RH	1	
	25-32172- 3	• BUSHING, LONGERON FITTING CLAMP UP, USE WITH INDEX 29	1	
	25-32094- 2	• LONGERON ASSY, CENTER FUSELAGE LOWER RH	1	
- 30	25-32094- 4	• • LONGERON RH	1	
- 31	25-32177- 4	• • STIFFENER, CENTER FUS LOWER LONGERON RH	1	
	25-32022- 4	• DOOR ASSEMBLY, STABILATOR & RUDDER BELL CRANK ACCESS RH	1	A-B
	25-32324- 2	• DOOR ASSEMBLY, STABILATOR & RUDDER BELL CRANK ACCESS RH	1	C-F
- 32	25-32022- 8	• • DOOR ASSEMBLY, RH	1	A-B
	25-32324- 26	• • DOOR ASSEMBLY, RH	1	C-F
		ATTACHING PARTS		
- 33	AN509-416R13	• • SCREW	46	
		¤----¤-¤-¤----¤		
- 34	25-32151- 4	• FITTING, TRAILING EDGE FLAP UP STOP FUS RH	1	
	25-32018- 14	• DOOR ASSY, FUEL TANK CAPACITOR UNIT ACCESS RH	1	
- 35	25-32018- 16	• • DOOR ASSY, RH	1	
		ATTACHING PARTS		
- 36	AN509-416R13	• • SCREW	46	
- 37	AN509-10R14	• • SCREW	1	
		¤----¤-¤-¤----¤		
	25-32067- 2	• RING ASSEMBLY, FUSELAGE STATION 340.4 RH	1	A-C
- 38	25-32182- 3	• • FITTING, CAP SPLICE	1	
- 39	25-32328- 2	• FITTING ASSEMBLY, WING REAR SPAR FUSELAGE ATTACHMENT RH	1	
		ATTACHING PARTS		
- 40	AN509-416R16	• SCREW	1	
	AN960D416	• WASHER	1	
	AN365-428	• NUT	1	
- 41	AN509-416R15	• SCREW	1	
	AN960D416	• WASHER	1	
	AN365-428	• NUT	1	
- 42	AN509-416R14	• SCREW	1	
	AN960D416	• WASHER	1	
	AN365-428	• NUT	1	
- 43	AN4-7A	• BOLT	3	
	AN960D416L	• WASHER	3	
	AN960D416	• WASHER	3	
	AN365-428	• NUT	3	
- 44	AN4-10A	• BOLT	3	
	AN960D416L	• WASHER	3	
	AN960D416	• WASHER	6	
	AN365-428	• NUT	3	
- 45	AN4-7A	• BOLT	1	
	AN960D416L	• WASHER	1	
	AN960D416	• WASHER	2	
	AN365-428	• NUT	1	
		¤----¤-¤-¤----¤		
	25-32116- 2	• FITTING INSTL, MAIN LG DOOR HINGE BACK UP RH	1	
- 46	25-32113- 4	• • FITTING, MAIN LG DOOR HINGE BACK UP AFT RH	1	
		ATTACHING PARTS		
- 47	AN4-7A	• • BOLT	4	
	AN960D416	• • WASHER	8	
	AN365-428	• • NUT	4	
		¤----¤-¤-¤----¤		
- 48	25-32114- 4	• • FITTING, MAIN LG DOOR HINGE BACK UP FWD RH	1	
		ATTACHING PARTS		
- 49	MAS464-8A18	• • BOLT	1	
	AN960-816L	• • WASHER	1	
	25-32297- 3	• • WASHER, CENTER FUSELAGE SOFT ALUMINUM	2	
	AN960-816	• • WASHER	1	
	AN364-820	• • NUT	1	
		¤----¤-¤-¤----¤		
	25-32022- 2	• DOOR ASSY, FUEL PILOT VALVE ACCESS RH	1	
- 50	25-32022- 6	• • DOOR ASSEMBLY, RH	1	
		ATTACHING PARTS		
- 51	AN509-416R13	• • SCREW	61	
		¤----¤-¤-¤----¤		
	25-32029- 2	• DOOR ASSY, ENGINE AIR HYD ACTUATOR ACCESS RH	1	

Center Fuselage

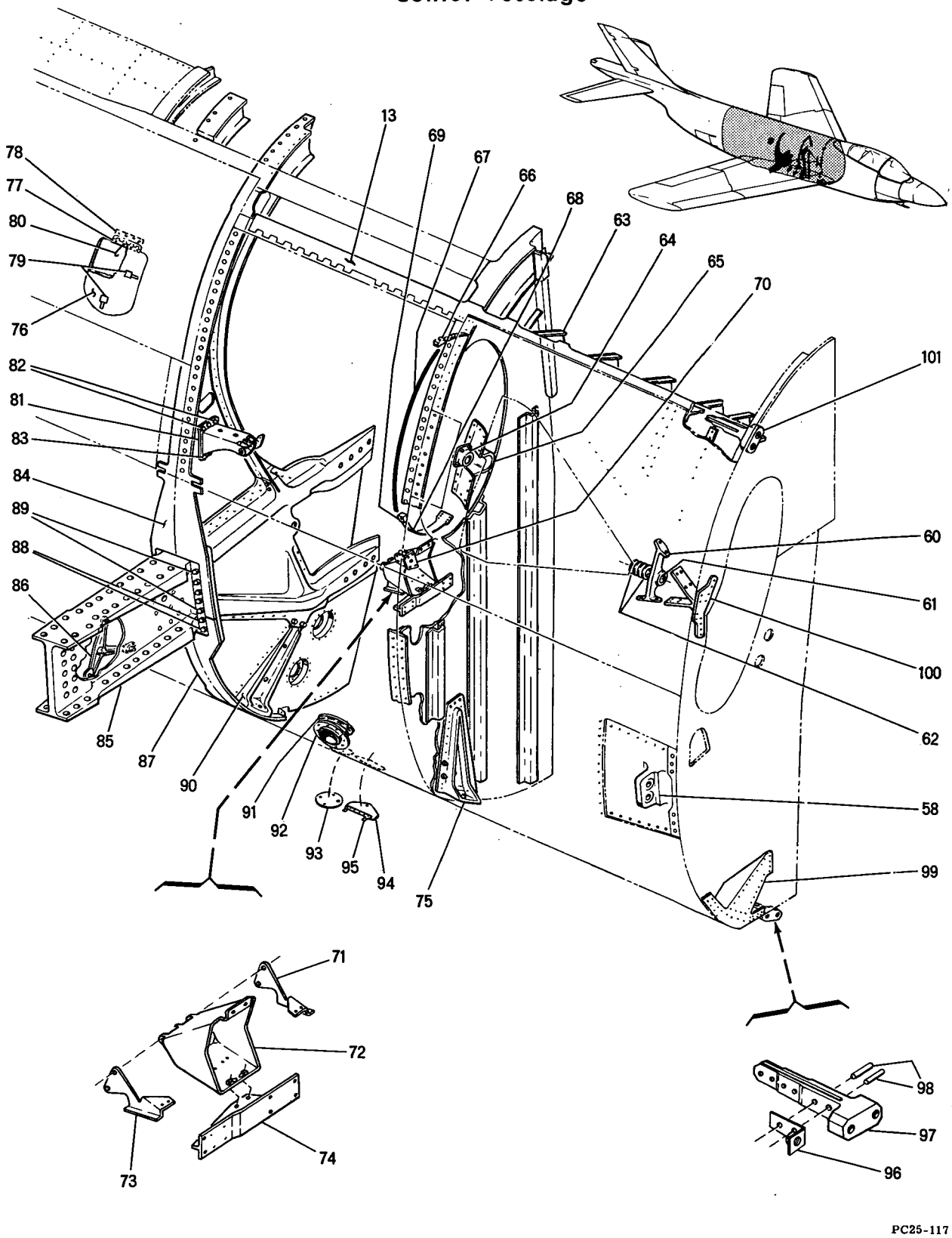

Figure 109 -- Center Fuselage Right Side Panel Assembly (Sheet 2 of 2)

FIGURE & INDEX NUMBER	PART NUMBER	1 2 3 4 5 6 7 DESCRIPTION	UNITS PER ASS'Y	USABLE ON CODE
109 - 52	25-32029- 4	• • DOOR RH	1	
		ATTACHING PARTS		
- 53	AN509-10R11	• • SCREW	20	
		¤----¤-¤-¤-¤----¤		
	25-32131- 2	• BEAM ASSY, FUS STA 232.4 TO FUS STA 277.3 RH	1	
- 54	25-32167- 3	• • FITTING, STABILATOR & RUDDER BELL CRANK ATTACHMENT	1	
	25-32134- 2	• SUPPORT ASSY, WING FUEL CELL FUELING PILOT VALVE RH	1	
- 55	GRA350-8H32	• • FLANGE (NEUS)	1	
		ATTACHING PARTS		
- 56	AN509-10R5	• • SCREW	4	
		¤----¤-¤-¤-¤----¤		
	25-58076- 15	• • GASKET, FUEL SYSTEM, USE WITH INDEX 55	1	
	25-58207- 1	• RECEPTACLE ASSY, FUEL NOZZLE GROUNDING	2	
- 57	AN3117-1	• • RECEPTACLE, FUEL NOZZLE GROUNDING	1	
- 58	25-32139- 4	• FITTING, WING FRONT SPAR ATTACHMENT RH	1	
	25-32099- 1	• SUPPORT ASSEMBLY, AFT PYLON ATTACHMENT	1	
- 59	25-32099- 9	• • COVER	1	
		ATTACHING PARTS		
	AN509-516R13	• • SCREW	1	
		¤----¤-¤-¤-¤----¤		
- 60	25-32097- 2	• FITTING ASSY, ENGINE AUXILIARY AIR DOOR FWD SUPPORT RH	1	
	RRT137S	• • RING, RETAINING (RMS)	1	
- 61	BSSR12000G	• • BEARING (SWPC)	1	
	NAS497	• • FITTING, LUB	1	
- 62	AN960-1216L	• WASHER	4	
- 63	25-32058- 2	• FRAME ASSEMBLY, FUSELAGE STATION 272.9 RH	1	
	25-77077- 1	• • EYELET, CONDUIT GUIDE	2	
	25-77077- 3	• • • FERRULE	1	
- 64	25-32163- 2	• • FITTING ASSY, ENGINE AIR DOOR AFT SUP. RH	1	
		ATTACHING PARTS		
	AN4-10A	• • BOLT, INBOARD	2	
	AN960D416L	• • WASHER	2	
	AN960D416	• • WASHER	2	
	AN365-428	• • NUT	2	
	AN4-7A	• • BOLT, OUTBOARD	2	
	AN960D416L	• • WASHER	2	
	AN960D416	• • WASHER	2	
	AN365-428	• • NUT	2	
		¤----¤-¤-¤-¤----¤		
	RRT143S	• • • RING, RETAINING (RMS)	1	
	HSBG12	• • • BEARING (AAAD) ALTERNATE BLN120003G-C (SWPC)	1	
	NAS497	• • • FITTING, LUB	1	
	25-32163- 4	• • • FITTING RH	1	
	25-32031- 2	• DOOR ASSY, AUX AIR DOOR AFT SUPPORT ACCESS RH	1	
- 65	25-32031- 8	• • DOOR RH	1	
		ATTACHING PARTS		
	AN509-10R11	• • SCREW	16	
		¤----¤-¤-¤-¤----¤		
- 66	15341-1	• STRAP ASSEMBLY (MAR) DUCT ATTACHMENT UPPER	1	
- 67	25-32004-177	• SEAL, ENG AIR DUCT, SELECTED FROM 11M605 (MDA)	1	
	25-32215- 2	• STRAP ASSEMBLY, DUCT ATTACHMENT RING RH	1	
- 68	25-32215- 4	• • STRAP RH	1	
- 69	16198-12-3.125	• • LATCH ASSY (MAR)	1	
	25-32057- 2	• BULKHEAD ASSEMBLY, FUSELAGE STATION 277.3 RH	1	A
	25-32057-302	• BULKHEAD ASSEMBLY, FUSELAGE STATION 277.3 RH	1	B-F
- 70	25-68126- 3	• • BRACKET, ARRESTING HOOK RELEASE CABLE PULLEY	1	
	25-61213- 1	• • BRACKET ASSY, STABILATOR & RUDDER IDLER RIGHT SIDE	1	
- 71	25-61214- 4	• • • BRACKET, LOCATING PIN RH	1	
- 72	25-61210- 1	• • • BRACKET ASSY, STABILATOR & RUDDER IDLER	1	
- 73	25-61214- 3	• • • BRACKET, LOCATING PIN LH	1	
- 74	25-61216- 4	• • • TEE, STABILATOR & RUDDER IDLER BRACKET	1	
- 75	25-32101- 4	• • FITTING, EXTERNAL STORES SUPPORT RH	1	
	25-32210- 2	• DOOR ASSEMBLY, OIL FILLER SUPPORT ACCESS RH	1	
- 76	25-32210- 3	• • DOOR ASSEMBLY, OIL FILLER ACCESS	1	
	AN253-5-388	• • • PIN, HINGE	1	
- 77	25-32210- 21	• • • HINGE, HALF, ALTERED FROM 9M27HY1A400 (MDA)	1	
- 78	25-32210- 19	• • • HINGE, HALF, ALTERED FROM 9M27HX3A400 (MDA)	1	

FIGURE & INDEX NUMBER	PART NUMBER	1 2 3 4 5 6 7 DESCRIPTION	UNITS PER ASS'Y	USABLE ON CODE
109 - 79	H5100-125-330	• • • LATCH (HWL)	2	
- 80	15-11203	• • SPRING ASSY, OIL FILLER DOOR	1	
	15-11203- 3	• • • SPRING	1	
		ATTACHING PARTS		
	AN393-43	• • • PIN, FLAT HEAD	1	
	NAS43-3-76	• • • SPACER	1	
	AN380-2-2	• • • PIN, COTTER	1	
		¤----¤-¤-¤----¤		
	15-11203- 5	• • • CLIP	1	
	25-32060- 2	• BULKHEAD ASSY, CANTED FUSELAGE STA 310.0 RH	1	
- 81	25-61209- 5	• • BRACKET, STABILATOR & RUDDER BELL CRANK SUPPORT	1	
		ATTACHING PARTS		
- 82	AN4-10A	• • BOLT, UPPER	3	
	AN960PD416L	• • WASHER	3	
	AN960PD416	• • WASHER	3	
	AN365-428	• • NUT	3	
- 83	AN4-11A	• • BOLT, LOWER OUTBD	2	
	AN960PD416L	• • WASHER	2	
	AN960PD416	• • WASHER	4	
	AN365-428	• • NUT	2	
	AN4-12A	• • BOLT, LOWER INBD	1	
	AN960PD416	• • WASHER	3	
	AN365-428	• • NUT	1	
		¤----¤-¤-¤----¤		
- 84	25-32060- 60	• • CAP, UPPER RH	1	
- 85	25-32141- 5	• • FITTING, WING CARRY THRU	1	
- 86	25-42307- 3	• • FITTING, INBOARD DOOR LINK SUPPORT	1	
		ATTACHING PARTS		
	NAS145-26	• • BOLT	3	
	AN960D516	• • WASHER	3	
		¤----¤-¤-¤----¤		
- 87	25-32060- 66	• • CAP, LOWER RH	1	
- 88	25-32297- 3	• • WASHER, CENTER FUSELAGE SOFT ALUMINUM	6	
- 89	25-32297- 5	• • WASHER, CENTER FUSELAGE SOFT ALUMINUM	20	
- 90	25-32104- 4	• • FITTING, EXTERNAL STORES SUPPORT RH	1	
- 91	25-32228- 1	• SLEEVE ASSEMBLY, ENGINE STARTER AIR EXHAUST	1	
- 92	25-32228- 3	• GASKET, ENGINE STARTER AIR EXHAUST SLEEVE	1	
- 93	25-32294- 17	• COVER, EXTERNAL STORES RELEASE	1	
		ATTACHING PARTS		
	AN509-10R10	• SCREW	4	
		¤----¤-¤-¤----¤		
- 94	25-32294- 7	• DOOR ASSEMBLY, EXTERNAL STORES RELEASE	1	
		ATTACHING PARTS		
	AN509-10R11	• SCREW	1	
		¤----¤-¤-¤----¤		
- 95	25-32295- 5	• • SPRING, EXTERNAL STORES RELEASE DOOR	1	
- 96	25-32221- 2	• RETAINER ASSY, LOWER LONGN FWD SPLICE FITTING NUT RH	1	
- 97	25-32088- 4	• FITTING, LOWER LONGERON FORWARD SPLICE RH	1	
- 98	25-32171- 3	• BUSHING, UPPER LONGERON FORWARD SPLICE FITTING CLAMP UP	2	
	25-32051- 3	• BULKHEAD ASSY, CENTER FUSELAGE STATION 232.4, RIGHT SIDE	1	A-C
	25-32051-303	• BULKHEAD ASSY, CENTER FUSELAGE STATION 232.4, RIGHT SIDE	1	D-F
- 99	25-32149- 3	• • FITTING, EXTERNAL STORES SUPPORT, ALTERNATE 25-32102-3	1	
-100	25-32159- 4	• • FITTING, BWD TO ENGINE AIR DOOR BEAMS RH	1	
-101	25-32083- 6	• FITTING, UPPER LONGERON FORWARD SPLICE RH	1	
	25-32126- 2	• FAIRING ASSY, ENG AIR DOOR FWD SUPPORT FITTING	1	
	25-32126- 4	• • FAIRING	1	

FIGURE & INDEX NUMBER	PART NUMBER	1 2 3 4 5 6 7 DESCRIPTION	UNITS PER ASS'Y	USABLE ON CODE
110 -	25-32013- 1	DOOR ASSY, ENGINE AUXILIARY AIR LH, ALTERNATE FOR 25-32013-301, SEE FIG. 108-63 FOR NEXT HIGHER ASSEMBLY	REF	
	25-32013-301	DOOR ASSY, ENGINE AUXILIARY AIR LH, USE FOR FUTURE PROCUREMENT TO REPLACE 25-32013-1, SEE FIG. 108-63 FOR NEXT HIGHER ASSEMBLY	REF	
	25-32013- 2	DOOR ASSY, ENGINE AUXILIARY AIR RH, ALTERNATE FOR 25-32013-302, SEE FIG. 109-12 FOR NEXT HIGHER ASSEMBLY	REF	
	25-32013-302	DOOR ASSY, ENGINE AUXILIARY AIR RH, USE FOR FUTURE PROCUREMENT TO REPLACE 25-32013-2, SEE FIG. 109-12 FOR NEXT HIGHER ASSEMBLY	REF	
- 1	25-32122- 2	. FITTING ASSY, ENGINE AUX AIR DOOR FORWARD HINGE RH	1	25-32013-2
	25-32122-302	. FITTING ASSY, ENGINE AUX AIR DOOR FORWARD HINGE RH	1	25-32013-302
	25-32122- 1	. FITTING ASSY, ENGINE AUX AIR DOOR FORWARD HINGE LH	1	25-32013-1
	25-32122-301	. FITTING ASSY, ENGINE AUX AIR DOOR FORWARD HINGE LH	1	25-32013-301
		ATTACHING PARTS		
- 2	AN509-10R12	. SCREW	4	
	AN960D10	. WASHER	4	
	AN365-1032	. NUT	4	
- 3	AN509-10R13	. SCREW	1	
- 4	AN509-10R12	. SCREW	3	
- 5	AN3-6A	. BOLT	2	
	AN960D10	. WASHER	2	
- 6	AN509-10R15	. SCREW	4	
	AN960D10	. WASHER	4	
	AN365-1032	. NUT	4	
		¤----¤-¤-¤----¤		
- 7	25-32120- 3	. . PIN, ENGINE AUX AIR DOOR FORWARD HINGE	1	
	25-32236- 3	. . FITTING, ENGINE AUXILIARY AIR DOOR FORWARD HINGE LH	1	
- 8	25-32236- 4	. . FITTING, ENGINE AUXILIARY AIR DOOR FORWARD HINGE RH	1	
	25-32013- 55	. DOOR, ENGINE AUXILIARY AIR DOOR AFT HINGE LH	1	
- 9	25-32013- 56	. DOOR, ENGINE AUXILIARY AIR DOOR AFT HINGE RH	1	
		ATTACHING PARTS		
- 10	AN509-10R12	. SCREW	31	
		¤----¤-¤-¤----¤		
	25-32125- 1	. FITTING ASSY, ENGINE AUX AIR DOOR AFT HINGE LH	1	
- 11	25-32125- 2	. FITTING ASSY, ENGINE AUX AIR DOOR AFT HINGE RH	1	
		ATTACHING PARTS		
- 12	AN509-10R11	. SCREW	3	
- 13	AN4-7A	. BOLT	4	
	AN960D416	. WASHER	4	
- 14	AN4-7A	. BOLT	8	
	AN960D416	. WASHER	16	
		¤----¤-¤-¤----¤		
	25-32145- 7	. . CRANKSHAFT, ENGINE AUX AIR DOOR AFT HINGE LH	1	
- 15	25-32145- 8	. . CRANKSHAFT, ENGINE AUX AIR DOOR AFT HINGE RH	1	
		ATTACHING PARTS		
- 16	3M20R16	. . BOLT (MDA)	1	
	AN960D416	. . WASHER	1	
	AN310-4	. . NUT	1	
	AN380-2-4	. . PIN, COTTER	1	
		¤----¤-¤-¤----¤		
	25-32118- 3	. . FITTING, ENGINE AUX AIR DOOR AFT HINGE LH	1	
- 17	25-32118- 4	. . FITTING, ENGINE AUX AIR DOOR AFT HINGE RH	1	
	25-69068- 1	ACTUATOR INSTL, ENGINE AUXILIARY AIR DOOR LH, SEE FIG. 130-28 FOR NEXT HIGHER ASSEMBLY	REF	
	25-69068- 2	ACTUATOR INSTL, ENGINE AUXILIARY AIR DOOR RH, SEE FIG. 130-28 FOR NEXT HIGHER ASSEMBLY	REF	
- 18	25-69344- 3	. SPRING, ENGINE AUX AIR DOOR EXTENSION	1	
		ATTACHING PARTS		
- 19	AN4-6A	. BOLT	1	
	AN960D716	. WASHER	2	
	NAS42DD8-18	. SPACER	1	
- 20	AN364-524	. NUT	1	

Center Fuselage

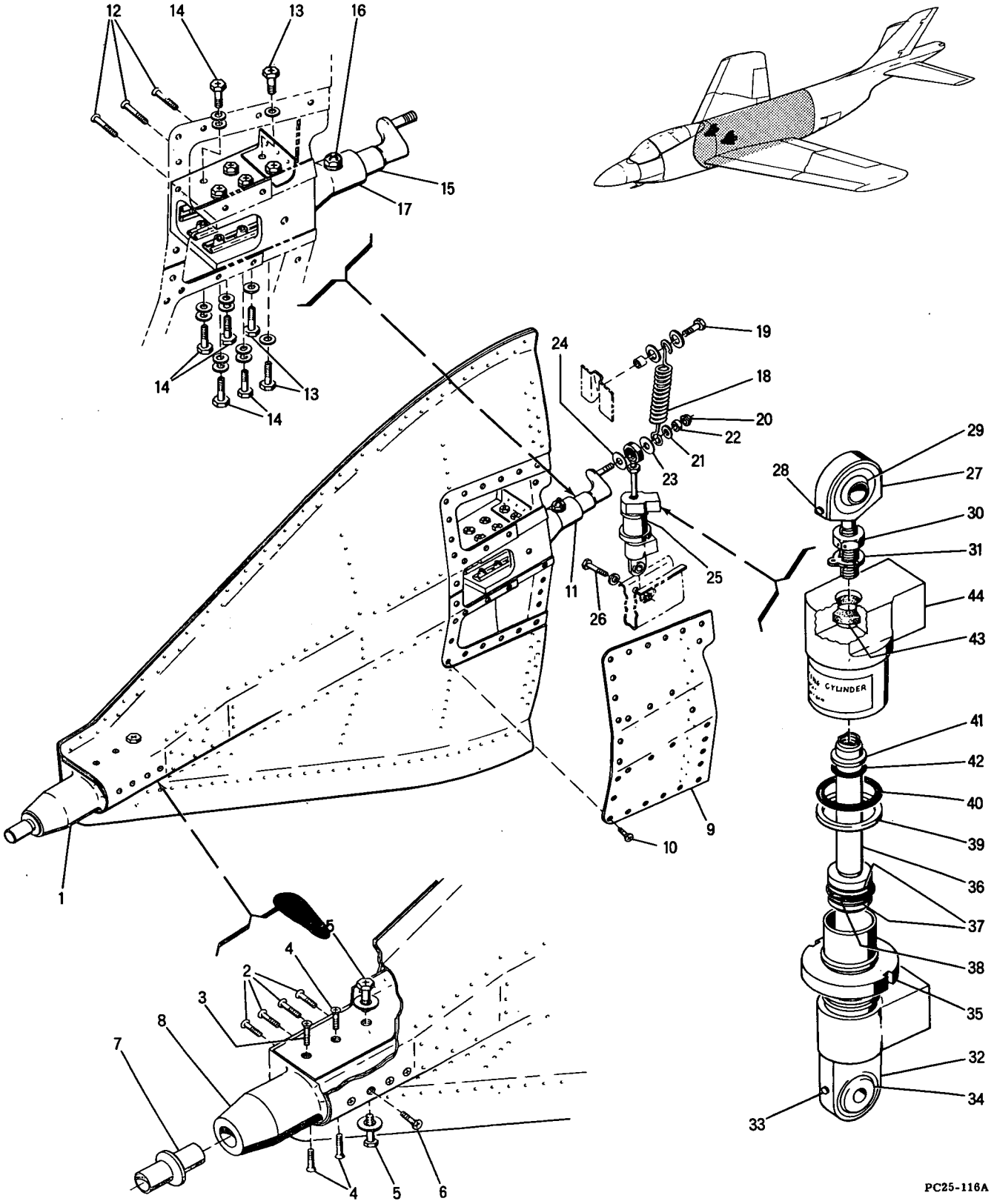

Figure 110 -- Engine Auxiliary Air Door Assembly and Actuator Installation

FIGURE & INDEX NUMBER	PART NUMBER	1 2 3 4 5 6 7 DESCRIPTION	UNITS PER ASS'Y	USABLE ON CODE
110 -		ATTACHING PARTS (CONT)		
- 21	AN960-716L	• WASHER	1	
- 22	NAS43HT5-10	∘ SPACER	1	
- 23	4M36-02036	• WASHER (MDA)	1	
- 24	25-69438- 3	• WASHER, ENGINE AUXILIARY AIR DOOR CRANKSHAFT	1	
		¤----¤-¤-¤----¤		
	25-69346- 1	∘ ACTUATOR ASSY, ENGINE AUX AIR DOOR, LEFT SIDE	1	
- 25	25-69346- 3	• ACTUATOR ASSY, ENGINE AUX AIR DOOR, RIGHT SIDE	1	
		ATTACHING PARTS		
- 26	AN4-12A	• BOLT	1	
	AN960D416	∘ WASHER	1	
		¤----¤-¤-¤----¤		
- 27	25-69350- 1	• • ROD END ASSY, ENGINE AUX AIR DOOR ACTUATOR	1	
- 28	NAS497	∘ • • FITTING, LUB	1	
- 29	BSSN5003G	• • • BEARING (SWPC) ALTERNATE HSBG5SS (HLF)	1	
- 30	NAS509-4	• • NUT, JAM	1	
- 31	9M103-4	• • WASHER, LOCK (MDA)	1	
- 32	25-69347- 1	• • BARREL ASSY, ENGINE AUX AIR DOOR ACTUATOR	1	
- 33	NAS497	• • • FITTING, LUB	1	
- 34	BSSR4000G	• • • BEARING (SWPC)	1	
- 35	25-69351- 3	• • NUT, ENGINE AUX AIR DOOR ACTUATOR	1	
- 36	25-69349- 3	• • PISTON, ENGINE AUX AIR DOOR ACTUATOR	1	
- 37	6144-9	• • RING, BACK UP (SHWS)	2	
- 38	AN6227B9	• • PACKING, O RING	1	
- 39	6144-14	• • RING, BACK UP (SHWS)	1	
- 40	AN6227B14	• • PACKING, O RING	1	
- 41	6144-7	• • RING, BACK UP (SHWS)	1	
- 42	AN6227B7	• • PACKING, O RING	1	
- 43	AN6232C1-3/4	• • FELT, STRIP PACKING	1	
- 44	25-69348- 3	• • CAP, ENGINE AUX AIR DOOR ACTUATOR END	1	

Center Fuselage

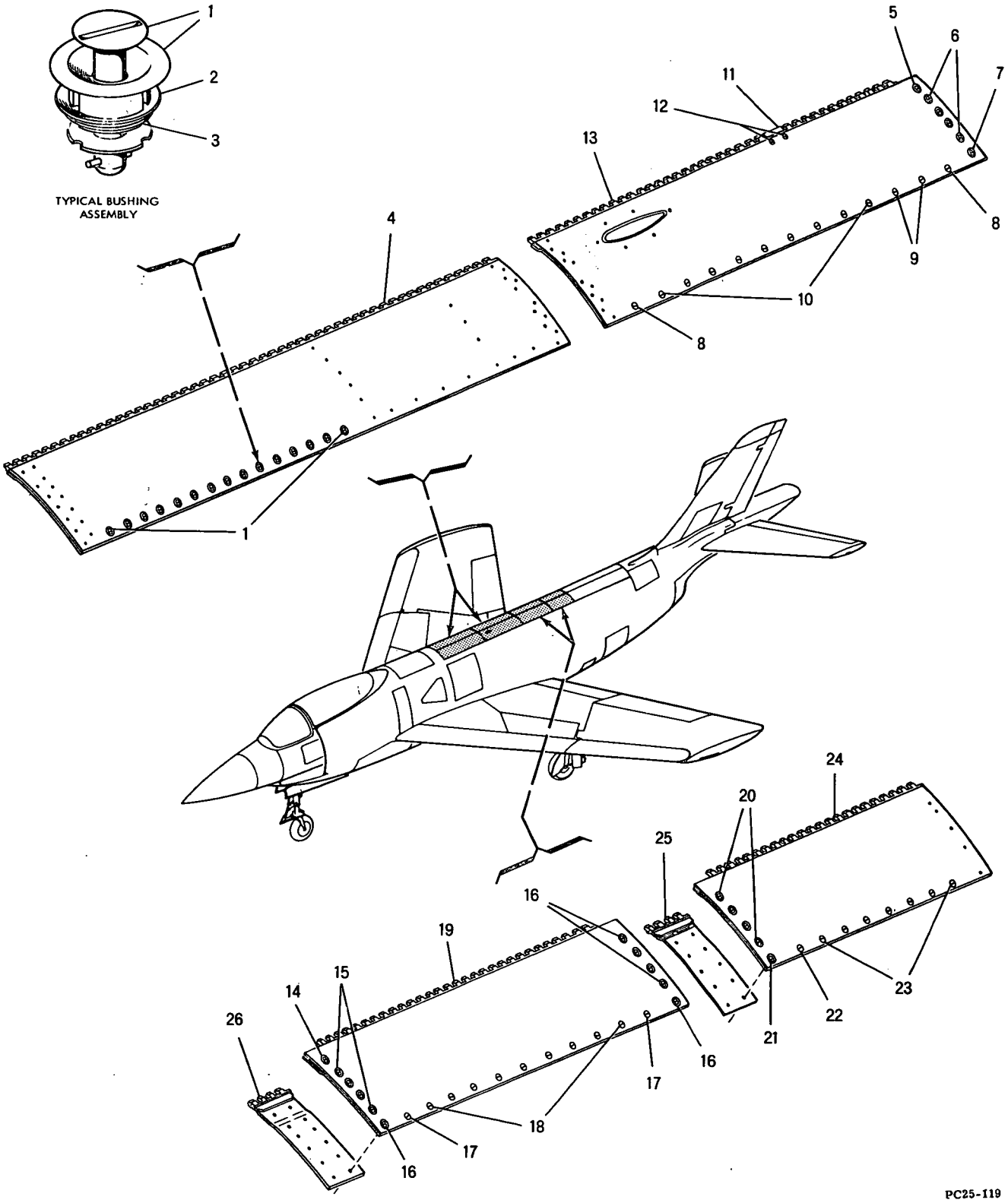

Figure 111 -- Electrical Equipment and Hydraulic Lines Access Door Assemblies

FIGURE & INDEX NUMBER	PART NUMBER	1 2 3 4 5 6 7 DESCRIPTION	UNITS PER ASS'Y	USABLE ON CODE
111 -	25-32014- 1	DOOR ASSEMBLY, ELECTRICAL EQUIPMENT & HYDRAULIC LINES ACCESS LH, SEE FIG. 106-7 FOR NEXT HIGHER ASSEMBLY	REF	A-C
	25-32014- 2	DOOR ASSEMBLY, ELECTRICAL EQUIPMENT & HYDRAULIC LINES ACCESS RH, SEE FIG. 106-8 FOR NEXT HIGHER ASSEMBLY	REF	A-C
- 1	9M68B435-510 #	. BUSHING ASSEMBLY (MDA) USE WITH 25-32319-3 SPACER, 1 EA, 9M73-1-064 SPACER (MDA) 2 EA & 99947P.130 RECEPTACLE (MKL)	15	
- 2	9M70B3	. WASHER (MDA)	15	
- 3	9M61B1	. RING (MDA)	15	
- 4	25-32014- 17	. HINGE, HALF LH, ALTERED FROM 9M83H4A5247 (MDA)	1	
	25-32014- 18	. HINGE, HALF RH, ALTERED FROM 9M83H4A5247 (MDA)	1	
	25-32014- 3	DOOR ASSEMBLY, ELECTRICAL EQUIPMENT & HYDRAULIC LINES ACCESS LH, FOR FUTURE PROCUREMENT USE 25-32014-301, SEE FIG. 106-9 FOR NEXT HIGHER ASSEMBLY	REF	A-C
	25-32014-301	DOOR ASSEMBLY, ELECTRICAL EQUIPMENT & HYDRAULIC LINES ACCESS LH, USE FOR FUTURE PROCUREMENT TO REPLACE 25-32014-3, SEE FIG. 106-9 FOR NEXT HIGHER ASSEMBLY	REF	
	25-32014- 4	DOOR ASSEMBLY, ELECTRICAL EQUIPMENT & HYDRAULIC LINES ACCESS RH, FOR FUTURE PROCUREMENT USE 25-32014-302, SEE FIG. 106-10 FOR NEXT HIGHER ASSEMBLY	REF	A-C
	25-32014-302	DOOR ASSEMBLY, ELECTRICAL EQUIPMENT & HYDRAULIC LINES ACCESS RH, USE FOR FUTURE PROCUREMENT TO REPLACE 25-32014-4, SEE FIG. 106-10 FOR NEXT HIGHER ASSEMBLY	REF	
- 5	9M68B435-510 #	. BUSHING ASSEMBLY (MDA) USE WITH 25-32319-3, 9M73-1-064, 9M73-1-032 SPACERS (MDA) & 99947P.130 RECEPTACLE (MKL)	1	
	9M70B2	. WASHER (MDA)	1	
	9M61B1	. RING (MDA)	1	
- 6	9M68B435-510 #	. BUSHING ASSEMBLY (MDA) USE WITH 25-32319-3, 9M73-1-064, 9M73-1-032 SPACERS (MDA) & 99947P.130 RECEPTACLE (MKL)	4	
	9M70B3	. WASHER (MDA)	4	
	9M61B1	. RING (MDA)	4	
- 7	9M68B435-510 #	. BUSHING ASSEMBLY (MDA) USE WITH 25-32319-3 SPACER, 1 EA, 9M73-1-064 SPACER (MDA) 2 EA & 99947P.130 RECEPTACLE (MKL)	1	
	9M70B3	. WASHER (MDA)	1	
	9M61B1	. RING (MDA)	1	
- 8	98265-2-.220	. STUD (MKL) USE WITH 99947P.130 RECEPTACLE (MKL)	2	
	99836	. PIN, CROSS (MKL)	2	
- 9	98265-2-.190	. STUD (MKL) USE WITH 99947P.130 RECEPTACLE (MKL)	2	
	99836	. PIN, CROSS (MKL)	2	
- 10	98265-1-.150	. STUD (MKL) USE WITH 99947P.130 RECEPTACLE (MKL)	9	
	99836	. PIN, CROSS (MKL)	9	
- 11	25-33114- 3	. STOP, HINGE PIN	1	
		ATTACHING PARTS		
- 12	AN509-10R10	. SCREW	2	
	AN960-10L	. WASHER	2	
	AN960-10	. WASHER	2	
	AN364-1032	. NUT	2	
		¤----¤-¤-¤----¤		
- 13	25-32014- 81	. HINGE, HALF LH, ALTERED FROM 9M83HY2A3915 (MDA)	1	
	25-32014- 82	. HINGE, HALF RH, ALTERED FROM 9M83HY2A3915 (MDA)	1	
	25-32014- 5	DOOR ASSEMBLY, ELECTRICAL EQUIPMENT & HYDRAULIC LINES ACCESS LH, SEE FIG. 106-13 FOR NEXT HIGHER ASSEMBLY	REF	
	25-32014- 6	DOOR ASSEMBLY, ELECTRICAL EQUIPMENT & HYDRAULIC LINES ACCESS RH, SEE FIG. 106-14 FOR NEXT HIGHER ASSEMBLY	REF	
- 14	9M68B435-510 #	. BUSHING ASSEMBLY (MDA) USE WITH 25-32319-3, 9M73-1-064, 9M73-1-032 SPACERS (MDA) & 99947P.130 RECEPTACLE (MKL)	1	
	9M70B2	. WASHER (MDA)	1	
	9M61B1	. RING (MDA)	1	
- 15	9M68B435-510 #	. BUSHING ASSEMBLY (MDA) USE WITH 25-32319-3, 9M73-1-064, 9M73-1-032 SPACERS (MDA) & 99947P.130 RECEPTACLE (MKL)	4	
	9M70B3	. WASHER (MDA)	4	
	9M61B1	. RING (MDA)	4	
- 16	9M68B435-510 #	. BUSHING ASSEMBLY (MDA) USE WITH 25-32319-3 SPACER, 1 EA, 9M73-1-064 SPACER (MDA) 2 EA & 99947P.130 RECEPTACLE (MKL)	6	

SEE AN 01-245FC-3 FOR METHOD OF REPLACEMENT.

FIGURE & INDEX NUMBER	PART NUMBER	1 2 3 4 5 6 7 DESCRIPTION	UNITS PER ASS'Y	USABLE ON CODE
111 -	9M70B3	• WASHER (MDA)	6	
	9M61B1	• RING (MDA)	6	
- 17	98265-2-.180	• STUD, (MKL) USE WITH 9M73-2N091 SPACER (MDA)& 99947P.130 RECEPTACLE (MKL)	2	
	99836	• PIN, CROSS (MKL)	2	
- 18	98265-1-.150	• STUD (MKL) USE WITH 99947P.130 RECEPTACLE (MKL)	9	
	99836	• PIN, CROSS (MKL)	9	
- 19	25-32014- 91	• HINGE, HALF LH, ALTERED FROM 9M83H2A2994 (MDA)	1	
	25-32014- 92	• HINGE, HALF RH, ALTERED FROM 9M83H2A2994 (MDA)	1	
	25-32014- 7	DOOR ASSEMBLY, ELECTRICAL EQUIPMENT & HYDRAULIC LINES ACCESS LH, SEE FIG. 106-16 FOR NEXT HIGHER ASSEMBLY	REF	
	25-32014- 8	DOOR ASSEMBLY, ELECTRICAL EQUIPMENT & HYDRAULIC LINES ACCESS RH, SEE FIG. 106-17 FOR NEXT HIGHER ASSEMBLY	REF	
- 20	9M68B435-510 #	• BUSHING ASSEMBLY (MDA) USE WITH 25-32319-3 SPACER, 1 EA, 9M73-1-064 SPACER (MDA) 2 EA, & 99947P.130 RECEPTACLE (MKL)	4	
	9M70B3	• WASHER (MDA)	4	
	9M61B1	• RING (MDA)	4	
- 21	9M68B435-510 #	• BUSHING ASSEMBLY (MDA) USE WITH 25-32319-3 SPACER, 1 EA, 9M73-1-064 SPACER (MDA) 2 EA & 99947P.130 RECEPTACLE (MKL)	1	
	9M70B3	• WASHER (MDA)	1	
	9M61B1	• RING (MDA)	1	
- 22	98265-2-.180	• STUD (MKL) USE WITH 99947P.130 RECEPTACLE (MKL)	1	
	99836	• PIN, CROSS (MKL)	1	
- 23	98265-1-.150	• STUD (MKL) USE WITH 99947P.130 RECEPTACLE (MKL)	7	
	99836	• PIN, CROSS (MKL)	7	
- 24	25-32014- 55	• HINGE, HALF LH, ALTERED FROM 9M83H2A2500 (MDA)	1	
	25-32014- 56	• HINGE, HALF RH, ALTERED FROM 9M83H2A2500 (MDA)	1	
	25-32014- 9	STRAP ASSEMBLY, ELECTRICAL EQUIPMENT & HYDRAULIC LINES ACCESS LH, SEE FIG. 106-15 FOR NEXT HIGHER ASSEMBLY	REF	
	25-32014- 10	STRAP ASSEMBLY, ELECTRICAL EQUIPMENT & HYDRAULIC LINES ACCESS RH, SEE FIG. 106-15 FOR NEXT HIGHER ASSEMBLY	REF	
- 25	25-32014- 59	• HINGE, HALF LH, ALTERED FROM 9M83H2A394 (MDA)	1	
	25-32014- 60	• HINGE, HALF RH, ALTERED FROM 9M83H2A394 (MDA)	1	
	25-32014- 93	STRAP ASSEMBLY, ELECTRICAL EQUIPMENT & HYDRAULIC LINES ACCESS LH, SEE FIG. 106-12 FOR NEXT HIGHER ASSEMBLY	REF	
	25-32014- 94	STRAP ASSEMBLY, ELECTRICAL EQUIPMENT & HYDRAULIC LINES ACCESS RH, SEE FIG. 106-12 FOR NEXT HIGHER ASSEMBLY	REF	
- 26	25-32014- 59	• HINGE, HALF LH, ALTERED FROM 9M83H2A394 (MDA)	1	
	25-32014- 60	• HINGE, HALF RH, ALTERED FROM 9M83H2A394 (MDA)	1	

SEE AN 01-245FC-3 FOR METHOD OF REPLACEMENT.

FIGURE & INDEX NUMBER	PART NUMBER	1 2 3 4 5 6 7 DESCRIPTION	UNITS PER ASS'Y	USABLE ON CODE
112 -	25-32011- 1	DOOR ASSEMBLY, HYDRAULIC COMPARTMENT ACCESS, SEE FIG. 106-1 FOR NEXT HIGHER ASSEMBLY	REF	A-C
- 1	25-32011-107	• DOOR ASSEMBLY	1	
- 2	9M68B435-510 #	• • BUSHING ASSEMBLY (MDA) USE WITH 25-32319-3, 9M73-1-064, 9M73-1-051 SPACERS (MDA) & 99947P.130 RECEPTACLE (MKL)	2	
	9M70B3	• • WASHER (MDA)	2	
	9M61B1	• • RING (MDA)	2	
- 3	9M68B435-510 #	• • BUSHING ASSEMBLY (MDA) USE WITH 25-32319-3, 9M73-1-012 SPACERS (MDA) 1 EACH, 9M73-1-064 SPACER (MDA) 2 EACH & 99947P.130 RECEPTACLE (MKL)	5	
	9M70B3	• • WASHER (MDA)	5	
	9M61B1	• • RING (MDA)	5	
- 4	9M68B435-510 #	• • BUSHING ASSEMBLY (MDA) USE WITH 25-32319-3, 9M73-1-064 SPACERS (MDA)& 99947P.130 RECEPTACLE (MKL)	1	
	9M70B3	• • WASHER (MDA)	1	
	9M61B1	• • RING (MDA)	1	
- 5	9M68B435-510 #	• • BUSHING ASSEMBLY (MDA) USE WITH 25-32319-3 SPACER 1 EA, 9M73-1-064 SPACER (MDA) 2 EA & 99947P.130 RECEPTACLE (MKL)	1	
	9M70B3	• • WASHER (MDA)	1	
	9M61B1	• • RING (MDA)	1	
- 6	AN253-2-493	• • PIN, HINGE	1	
- 7	25-32011- 89	• • HINGE, HALF, ALTERED FROM 9M57HY3A505 (MDA)	1	
- 8	25-32011- 87	• • HINGE, HALF, ALTERED FROM 9M57HX3A505 (MDA)	1	
	25-58207- 1	• RECEPTACLE ASSEMBLY, FUEL NOZZLE GROUNDING	1	
- 9	AN3117-1	• • RECEPTACLE, FUEL NOZZLE GROUNDING	1	
- 10	25-32011- 3	• DOOR ASSEMBLY	1	
		ATTACHING PARTS		
- 11	AN253-2-423	• PIN, HINGE	1	
		¤----¤-¤-¤----¤		
- 12	H5000-2-091-164	• • LATCH ASSY (HWL)	1	
- 13	25-32011- 85	• • HINGE, HALF, ALTERED FROM 9M57HX3A435 (MDA)	1	
- 14	25-32011- 83	• HINGE, HALF, ALTERED FROM 9M57HY3A435 (MDA)	1	
- 15	15-11203	• SPRING ASSEMBLY, FUEL FILLER DOOR	1	
- 16	15-11203- 3	• • SPRING	1	
		ATTACHING PARTS		
- 17	AN393-43	• • PIN, FLAT HEAD	1	
	NAS43-3-76	• • SPACER	1	
	AN380-2-2	• • PIN	1	
		¤----¤-¤-¤----¤		
	25-32011-103	• SEAL, LH, SELECTED FROM 11M603 (MDA)	1	
	25-32011-104	• SEAL, RH, SELECTED FROM 11M603 (MDA)	1	
	25-32012- 1	DOOR ASSEMBLY, ENGINE UPPER ACCESS LH, SEE FIG. 108-12 FOR NEXT HIGHER ASSEMBLY	REF	
	25-32012- 2	DOOR ASSEMBLY, ENGINE UPPER ACCESS RH, SEE FIG. 109-14 FOR NEXT HIGHER ASSEMBLY	REF	
- 18	9M68B435-510 #	• BUSHING ASSEMBLY (MDA) USE WITH 25-32319-3, 9M73-1-020 SPACERS (MDA) 1 EACH, 9M73-1-064 SPACER (MDA) 2 EACH & 99947P.130 RECEPTACLE (MKL)	21	
	9M70B3	• WASHER (MDA)	21	
	9M61B1	• RING (MDA)	21	
- 19	9M68B435-510 #	• BUSHING ASSEMBLY (MDA) USE WITH 25-32319-3, 9M73-1-012 SPACERS (MDA) 1 EACH, 9M73-1-064 SPACER (MDA) 2 EACH & 99947P.130 RECEPTACLE (MKL)	30	
	9M70B3	• WASHER (MDA)	30	
	9M61B1	• RING (MDA)	30	
- 20	9M68B435-510 #	• BUSHING ASSEMBLY (MDA) USE WITH 25-32319-3 SPACER, 1 EACH, 9M73-1-064 SPACER (MDA) 2 EACH & 99947P.130 RECEPTACLE (MKL)	1	
	9M70B3	• WASHER (MDA)	1	
	9M61B1	• RING (MDA)	1	
- 21	9M68B435-510 #	• BUSHING ASSEMBLY (MDA) USE WITH 25-32319-3, 9M73-1-064, 9M73-1-051 SPACERS (MDA) & 99947P.130 RECEPTACLE (MKL)	1	
	9M70B3	• WASHER (MDA)	1	
	9M61B1	• RING (MDA)	1	
- 22	9M68B435-510 #	• BUSHING ASSEMBLY (MDA) USE WITH 25-32319-3, 9M73-1-064, 9M73-1-020 SPACERS (MDA) & 99947P.130 RECEPTACLE (MKL)	1	
	9M70B3	• WASHER (MDA)	1	
	9M61B1	• RING (MDA)	1	

SEE AN 01-245FC-3 FOR METHOD OF REPLACEMENT.

Center Fuselage

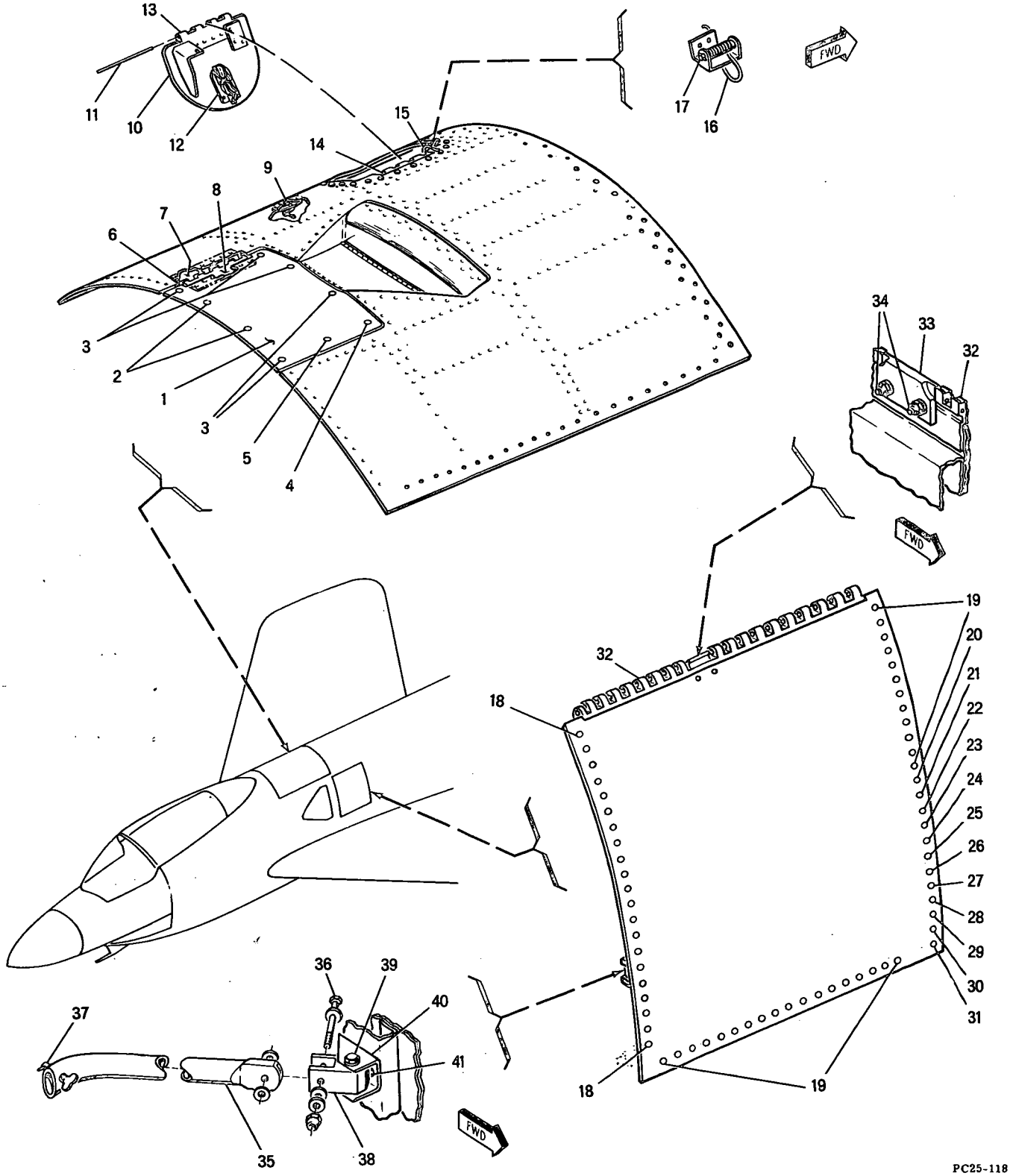

Figure 112 -- Hydraulic Compartment and Engine Upper Access Door Assemblies

FIGURE & INDEX NUMBER	PART NUMBER	1 2 3 4 5 6 7 DESCRIPTION	UNITS PER ASS'Y	USABLE ON CODE
112 - 23	9M68B435-510 #	• BUSHING ASSEMBLY (MDA) USE WITH 25-32319-3, 9M73-1-012, 9M73-1-064 SPACERS (MDA) & 99947P.130 RECEPTACLE (MKL)	1	
	9M70B3	• WASHER (MDA)	1	
	9M61B1	• RING (MDA)	1	
- 24	9M68B435-510 #	• BUSHING ASSEMBLY (MDA) USE WITH 25-32319-3, 9M73-1-064 SPACERS (MDA) & 99947P.130 RECEPTACLE (MKL)	1	
	9M70B3	• WASHER (MDA)	1	
	9M61B1	• RING (MDA)	1	
- 25	9M68B435-510 #	• BUSHING ASSEMBLY (MDA) USE WITH 25-32319-3, 9M73-1-032 SPACERS (MDA) & 99947P.130 RECEPTACLE (MKL)	1	
	9M70B3	• WASHER (MDA)	1	
	9M61B1	• RING (MDA)	1	
- 26	9M68B435-510 #	• BUSHING ASSEMBLY (MDA) USE WITH 25-32319-3, 9M73-1-012 SPACERS (MDA) & 99947P.130 RECEPTACLE (MKL)	1	
	9M70B3	• WASHER (MDA)	1	
	9M61B1	• RING (MDA)	1	
- 27	9M68B495-570 #	• BUSHING ASSEMBLY (MDA) USE WITH 25-32319-3, 9M73-1-064 SPACERS (MDA) & 99947P.130 RECEPTACLE (MKL)	1	
	9M70B3	• WASHER (MDA)	1	
	9M61B1	• RING (MDA)	1	
- 28	9M68B555-630 #	• BUSHING ASSEMBLY (MDA) USE WITH 25-32319-3, 9M73-1-064, 9M73-1-012 SPACERS (MDA) & 99947P.130 RECEPTACLE (MKL)	1	
- 29	9M68B555-630 #	• BUSHING ASSEMBLY (MDA) USE WITH 25-32319-3, 9M73-1-020 SPACERS (MDA) & 99947P.130 RECEPTACLE (MKL)	1	
	9M70B3	• WASHER (MDA)	2	
	9M61B1	• RING (MDA)	2	
- 30	9M68B615-690 #	• BUSHING ASSEMBLY (MDA) USE WITH 25-32319-3, 9M73-1-032 SPACERS (MDA) & 99947P.130 RECEPTACLE (MKL)	1	
- 31	9M68B615-690 #	• BUSHING ASSEMBLY (MDA) USE WITH 25-32319-3, 9M73-1-020 SPACERS (MDA) & 99947P.130 RECEPTACLE (MKL)	1	
	9M70B3	• WASHER (MDA)	2	
	9M61B1	• RING (MDA)	2	
- 32	25-32012- 39	• HINGE, HALF LH, ALTERED FROM 9M83H3-3184 (MDA)	1	
	25-32012- 40	• HINGE, HALF RH, ALTERED FROM 9M83H3-3184 (MDA)	1	
- 33	25-32258- 3	• STOP, ENGINE UPPER ACCESS DOOR HINGE PIN	1	
		ATTACHING PARTS		
- 34	AN509-10R11	• SCREW	2	
	AN960D10	• WASHER	2	
	AN364-1032	• NUT	2	
		¤----¤-¤-¤----¤		
- 35	25-32262- 1	• ROD ASSY, ENGINE UPPER ACCESS DOOR SUPPORT	1	
		ATTACHING PARTS		
- 36	AN3-12A	• BOLT	1	
	AN960D10L	• WASHER	1	
	AN960D10	• WASHER	2	
	AN365-1032	• NUT	1	
		¤----¤-¤-¤----¤		
- 37	W98292-11-1.110	• • STUD (MKL)	1	
	99836	• • PIN, CROSS (MKL)	1	
	AN960D516	• • WASHER	1	
- 38	25-32260- 3	• LINK, ENGINE UPPER ACCESS DOOR SUPPORT	1	
		ATTACHING PARTS		
- 39	AN3-15A	• BOLT	1	
	AN960D10L	• WASHER	1	
	AN960D10	• WASHER	2	
	AN365-1032	• NUT	1	
		¤----¤-¤-¤----¤		
- 40	25-32259- 3	• CHANNEL, ENGINE UPPER ACCESS DOOR SUPPORT	1	
		ATTACHING PARTS		
- 41	AN509-10R12	• SCREW	2	
		¤----¤-¤-¤----¤		

SEE AN 01-245FC-3 FOR METHOD OF REPLACEMENT.

Center Fuselage

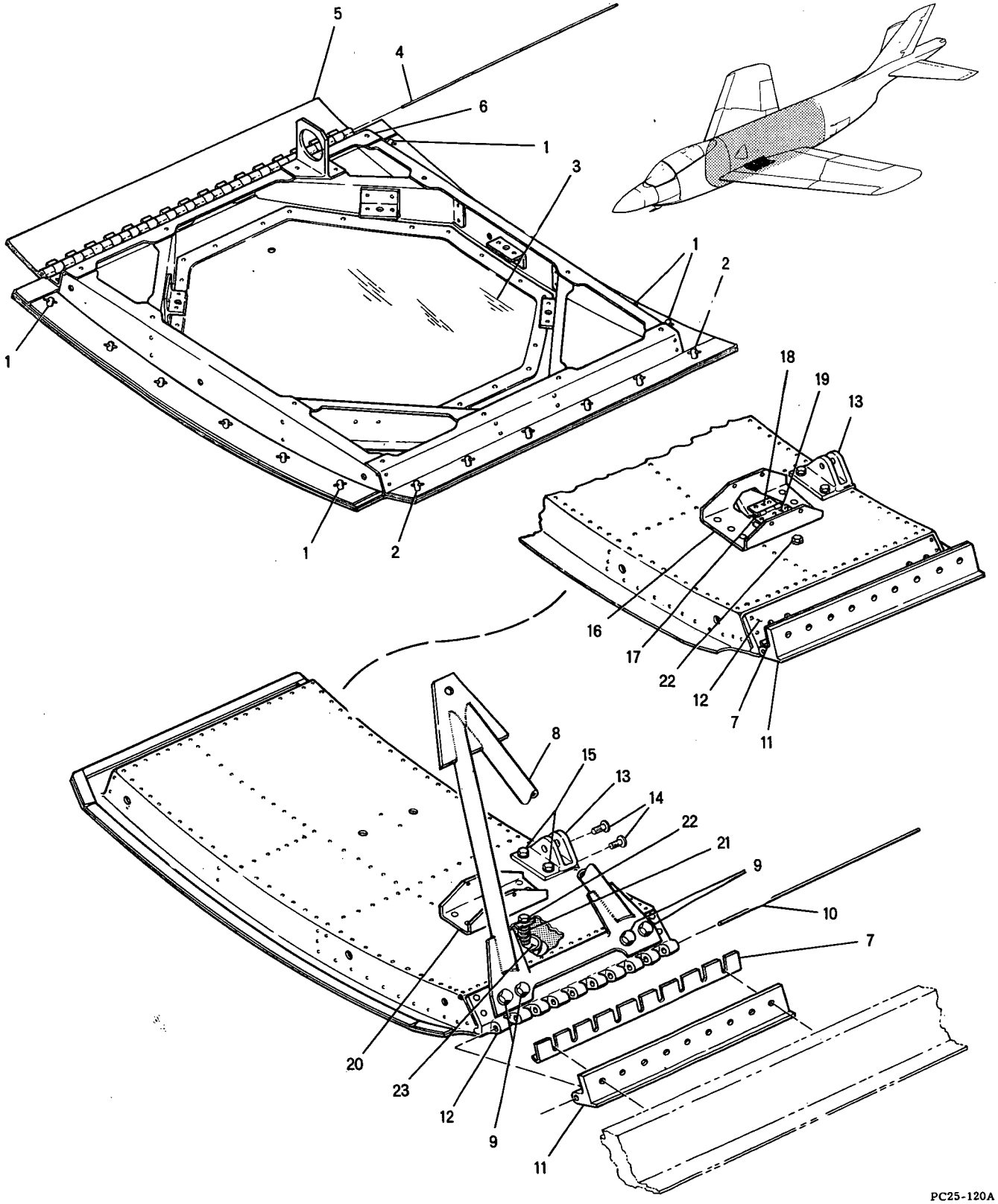

Figure 113 - Engine Lower Access and Ram Air Pump Door Assemblies

FIGURE & INDEX NUMBER	PART NUMBER	1 2 3 4 5 6 7 DESCRIPTION	UNITS PER ASS'Y	USABLE ON CODE
113 -	25-32008- 1	DOOR ASSY, ENGINE LOWER ACCESS, SEE FIG. 106-33 FOR NEXT HIGHER ASSEMBLY	REF	A
	25-32008-301	DOOR ASSY, ENGINE LOWER ACCESS, SEE FIG. 106-33 FOR NEXT HIGHER ASSEMBLY	REF	B-F
- 1	98265-3-.270	. STUD (MKL) USE WITH 99947P.130 RECEPTACLE (MKL	12	
	99836	. PIN, CROSS (MKL)	12	
- 2	98265-4-.420	. STUD (MKL) USE WITH 99947P.130 RECEPTACLE (MKL	6	
	99836	. PIN, CROSS (MKL)	6	
- 3	25-32256- 3	. COVER, ARA/25 ANTENNA	1	
- 4	AN253-5-1629	. PIN, HINGE	1	
- 5	25-32008- 33	. HINGE, HALF, ALTERED FROM 9M84H4A1649 (MDA)	1	
- 6	25-32008- 31	. HINGE, HALF, ALTERED FROM 9M83HX2A1923 (MDA)	1	
	25-32028-301	DOOR ASSEMBLY, RAM AIR PUMP, SEE FIG. 106 FOR NEXT HIGHER ASSY	REF	A
	25-32028- 1	DOOR ASSEMBLY, RAM AIR PUMP, SEE FIG. 106-30 FOR NEXT HIGHER ASSY	REF	B-F
- 7	25-32028- 41	. SEAL	1	
- 8	25-32028- 3	. TUBE ASSEMBLY, WELDED	1	B-F
		ATTACHING PARTS		
- 9	AN4-6A	. BOLT	4	
	AN960D416	. WASHER	4	
		¤----¤-¤-¤----¤		
- 10	AN253-5-982	. PIN, HINGE	1	
- 11	25-32028- 15	. HINGE, HALF, ALTERED FROM 9M88H2AX994 (MDA)	1	
- 12	25-32028- 17	. HINGE, HALF, ALTERED FROM 9M88H1AX1090 (MDA)	1	
- 13	25-32245- 3	. FITTING, RAM AIR PUMP DOOR ACTUATOR LOWER ATTACHMENT	1	
		ATTACHING PARTS		
- 14	AN509-416R13	. SCREW	2	
- 15	AN4-6A	. BOLT	2	
	AN960D416L	. WASHER	2	
		¤----¤-¤-¤----¤		
- 16	25-77079- 1	. BRACKET ASSEMBLY, CHECK SWITCH	1	A
- 17	AN253-2-185	. . PIN, HINGE	1	
- 18	AN257XP3-149	. . HINGE, HALF	1	
- 19	AN257YP3-200	. . HINGE, HALF	1	
- 20	25-77080- 3	. BRACKET, CHECK SWITCH	1	B-F
- 21	25-77082- 3	. SPRING, CHECK SWITCH COMPRESSION	2	
		ATTACHING PARTS		
- 22	AN3-16A	. BOLT	2	
	AN960D10	. WASHER	2	
	22-1650-02	. NUT, FLUSH (EN)	2	
		¤----¤-¤-¤----¤		
- 23	25-77081- 3	. BUTTON, CHECK SWITCH	2	

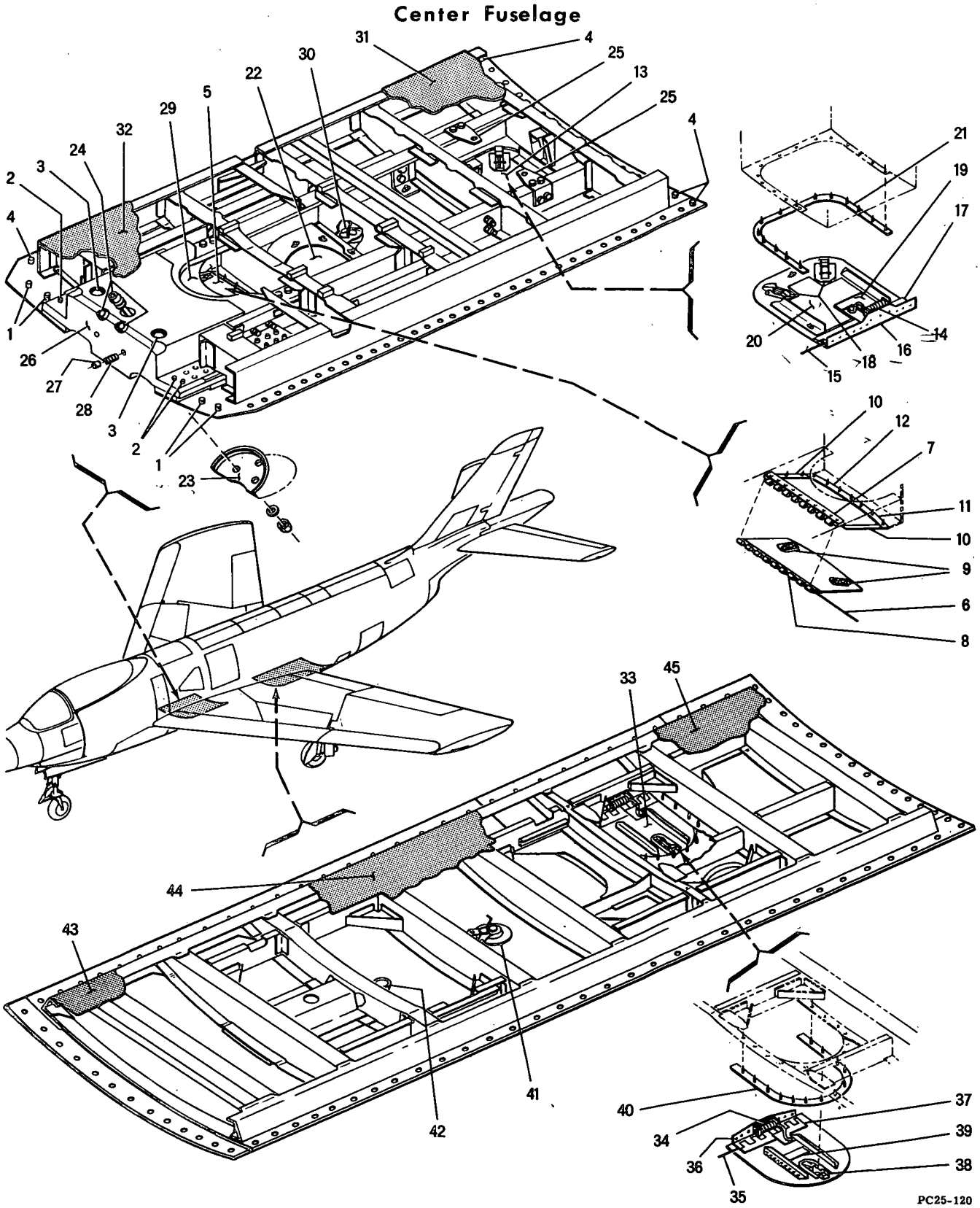

Figure 114 - Forward and Center Fuel Cell Access Door Assemblies

FIGURE & INDEX NUMBER	PART NUMBER	1 2 3 4 5 6 7 DESCRIPTION	UNITS PER ASS'Y	USABLE ON CODE
114 -	25-32007- 1	DOOR ASSEMBLY, FORWARD FUEL CELL ACCESS. SEE FIG. 106-29 FOR NEXT HIGHER ASSEMBLY	REF	A
	25-32007-301	DOOR ASSEMBLY, FORWARD FUEL CELL ACCESS. SEE FIG. 106-29 FOR NEXT HIGHER ASSEMBLY	REF	B-F
		ATTACHING PARTS		
- 1	AN509-616R17	SCREW	4	
- 2	AN509-516R30	SCREW	4	
- 3	NAS156-58	BOLT	2	
	25-32264- 3	WASHER, CATAPULT TOW HOOK FITTING	2	
- 4	AN509-516R15	SCREW	79	
		¤----¤-¤-¤----¤		
- 5	25-32007- 3	. DOOR ASSEMBLY	1	
- 6	AN253-2-812	. . PIN, HINGE	1	
- 7	25-32007- 7	. . HINGE, HALF, ALTERED FROM GOVERNMENT STD PART NO. MS20001PY12-825	1	
- 8	25-32007- 9	. . HINGE, HALF, ALTERED FROM GOVERNMENT STD PART NO. MS20001PX12-825	1	
- 9	H5000-2-125-218	. . LATCH ASSY (HWL)	2	
- 10	9M79-38A370	. STRIP, SEALING (MDA)	2	
- 11	9M79-25A359	. STRIP, SEALING (MDA)	1	
- 12	9M79-25A509	. STRIP, SEALING (MDA)	1	
- 13	25-32128- 1	. DOOR ASSY, FWD FUEL CELL FUELING VALVE ACCESS	1	A
	25-32128-301	. DOOR ASSY, FWD FUEL CELL FUELING VALVE ACCESS	1	B-F
- 14	25-32157- 3	. . SPRING, FORWARD FUEL CELL FUELING VALVE ACCESS DOOR	1	
		ATTACHING PARTS		
	AN392-67	. . PIN, FLAT HEAD	1	
	NAS42C5-118	. . SPACER	1	
	AN960-6	. . WASHER	1	
	AN380-2-1	. . PIN, COTTER	1	
		¤----¤-¤-¤----¤		
- 15	AN253-5-828	. . PIN, HINGE	1	
- 16	25-32128- 13	. . HINGE, HALF, ALTERED FROM 9M27HY2A840 (MDA)	1	
- 17	25-32128- 11	. . HINGE, HALF, ALTERED FROM 9M27HY2A840 (MDA)	1	
- 18	H5000-2-072-179	. . LATCH ASSY (HWL)	2	
- 19	25-89058- 5	. . NAMEPLATE, FORWARD FUEL CELL FUELING VALVE ACCESS DOOR WARNING	1	
- 20	25-89059- 7	. . NAMEPLATE, FORWARD FUEL CELL FUELING VALVE ACCESS DOOR	1	A
	25-89059- 9	. . NAMEPLATE, FORWARD FUEL CELL FUELING VALVE ACCESS DOOR	1	B-F
- 21	9M79-99A1962	. STRIP, SEALING (MDA)	1	
- 22	25-32007- 45	. DOOR, FUEL TANK CAPACITOR ACCESS	1	
		ATTACHING PARTS		
	AN509-10R11	. SCREW	8	
		¤----¤-¤-¤----¤		
- 23	25-32138- 3	. FITTING, CATAPULT TOW HOOK HORN	1	
		ATTACHING PARTS		
- 24	NAS146-63	. BOLT	3	
	NAS143-6C	. WASHER	3	
	AN960D616L	. WASHER	3	
	NAS143-6	. WASHER	3	
	AN365-624	. NUT	3	
		¤----¤-¤-¤----¤		
- 25	25-32007- 85	. ANGLE	2	
- 26	25-32095- 1	. FITTING ASSEMBLY, CATAPULT TOW HOOK	1	
- 27	52-094-500-0475	. . PIN, ROLL (EN)	2	
- 28	25-32290- 3	. . SPRING, CATAPULT TOW HOOK COMPRESSION	2	
- 29	25-32007-105	. BUMPER	1	
	25-58207- 1	. RECEPTACLE ASSY, FUEL NOZZLE GROUNDING	1	
- 30	AN3117-1	. . RECEPTACLE	1	
	25-58058- 33	. BACKING ASSY, FUSELAGE FORWARD FUEL TANK	1	
- 31	25-58058- 19	. . BACKING, AFT	1	
- 32	25-58058- 23	. . BACKING, FORWARD	1	
	25-32009- 1	DOOR ASSEMBLY, CENTER FUEL CELL ACCESS. SEE FIG. 106-34 FOR NEXT HIGHER ASSEMBLY	REF	A
	25-32009-301	DOOR ASSEMBLY, CENTER FUEL CELL ACCESS. SEE FIG. 106-34 FOR NEXT HIGHER ASSEMBLY	REF	B-F
- 33	25-32233- 1	. DOOR ASSEMBLY, CENTER FUEL CELL FUELING VALVE ACCESS	1	A
	25-32233-301	. DOOR ASSEMBLY, CENTER FUEL CELL FUELING VALVE ACCESS	1	B-F
- 34	25-32157- 3	. . SPRING, CENTER FUEL CELL FUELING VALVE ACCESS DOOR	1	

FIGURE & INDEX NUMBER	PART NUMBER	1 2 3 4 5 6 7 DESCRIPTION	UNITS PER ASS'Y	USABLE ON CODE
114 -		ATTACHING PARTS		
	AN392-67	• • PIN, FLAT HEAD	1	
	NAS42C5-118	• • SPACER	1	
	AN960-6	• • WASHER	1	
	AN380-2-1	• • PIN, COTTER	1	
		¤----¤-¤-¤----¤		
- 35	AN253-5-592	• • PIN, HINGE	1	
- 36	25-32233- 7	• • HINGE, HALF, ALTERED FROM 9M27HY2-604 (MDA)	1	
- 37	25-32233- 5	• • HINGE, HALF, ALTERED FROM 9M27HX1-604 (MDA)	1	
- 38	H5000-2-072-196	• • LATCH ASSY (HWL)	1	
- 39	25-89060- 3	• • NAMEPLATE, CENTER FUEL CELL FUELING VALVE ACCESS DOOR	1	
- 40	9M79-88A1828	• STRIP, SEALING (MDA)	1	
	25-58207- 1	• RECEPTACLE ASSY, FUEL NOZZLE GROUNDING	1	
- 41	AN3117-1	• • RECEPTACLE	1	
- 42	15-58471- 5	• OUTLET, BOOSTER PUMP SEAL DRAIN	1	
	25-58051- 31	• BACKING ASSY, CENTER FUSELAGE FUEL TANK	1	
- 43	25-58051- 41	• • BACKING, FORWARD	1	
- 44	25-58051- 39	• • BACKING, CENTER	1	
- 45	25-58051- 43	• • BACKING, AFT	1	

FIGURE & INDEX NUMBER	PART NUMBER	1 2 3 4 5 6 7 DESCRIPTION	UNITS PER ASS'Y	USABLE ON CODE
115 -	25-68102- 1	CONTROLS INSTALLATION, CENTER FUSELAGE AUXILIARY, SEE FIG. 106-24 FOR NEXT HIGHER ASSEMBLY	REF	
- 1	NAS303-01-0956	• CABLE ASSEMBLY, ARRESTING GEAR RELEASE	1	
- 2	AN155-16S	• BARREL, TURNBUCKLE	1	
- 3	25-68129- 3	• FAIRLEAD, ARRESTING GEAR RELEASE CABLE	5	
	25-68130- 3	• BASE, ARRESTING GEAR RELEASE CABLE FAIRLEAD USE WITH INDEX 3	5	
- 4	25-68131- 3	• FAIRLEAD, ARRESTING GEAR RELEASE CABLE	1	
	25-68132- 3	• BASE, ARRESTING GEAR RELEASE CABLE FAIRLEAD USE WITH INDEX 4	1	
- 5	NAS303-01-1833	• CABLE ASSEMBLY, ARRESTING GEAR RELEASE	1	
- 6	25-68133- 1	• CABLE ASSEMBLY, AUXILARY CONTROLS	1	
		ATTACHING PARTS		
- 7	AN23-14	• BOLT	1	
	AN960D10	• WASHER	2	
	AN320-3	• NUT	1	
	AN380-2-2	• PIN, COTTER	1	
		¤----¤-¤-¤----¤		
- 8	AN666-3RH	• • TERMINAL, CABLE	1	
- 9	AN658-3	• • TERMINAL, CABLE	1	
	25-68133- 5	• • CABLE	1	
- 10	NAS303-13-0237	• CABLE ASSEMBLY, EXTERNAL STORES EMER RELEASE, LEFT SIDE	1	
- 11	AN155-16S	• BARREL, TURNBUCKLE	1	
- 12	NAS313-20-0135	• CABLE ASSEMBLY, EXTERNAL STORES EMER RELEASE, LEFT SIDE	1	
- 13	NAS303-13-0430	• CABLE ASSEMBLY, EXTERNAL STORES EMER RELEASE, RIGHT SIDE	1	
- 14	AN155-16L	• BARREL, TURNBUCKLE	1	
- 15	NAS313-20-0386	• CABLE ASSEMBLY, EXTERNAL STORES EMER RELEASE, RIGHT SIDE	1	
- 16	AN219-4	• PULLEY	5	
- 17	AN219-2	• PULLEY	6	
- 18	25-68124- 3	• SPRING, EXT STORES EMER RELEASE EXTENSION	1	
- 19	25-68116- 3	• YOKE, EXTERNAL STORES EMERGENCY RELEASE	1	
		ATTACHING PARTS		
- 20	AN23-25	• BOLT	2	
	AN960D10L	• WASHER	2	
	AN960D10	• WASHER	2	
	AN320-3	• NUT	2	
	AN380-2-2	• PIN, COTTER	2	
		¤----¤-¤-¤----¤		
- 21	25-68115- 1	• BELL CRANK ASSEMBLY, EMERGENCY STORES RELEASE	1	
		ATTACHING PARTS		
- 22	AN24-24A	• BOLT	1	
	AN960D416L	• WASHER	1	
	AN960D416	• WASHER	1	
	AN364-428	• NUT	1	
		¤----¤-¤-¤----¤		
	DW4	• • BEARING (FAF)	1	
- 23	25-68121- 3	• SUPPORT, EXT STORES EMER RELEASE BELL CRANK	1	
- 24	25-68139- 3	• TUBE, EXT STORES EMERGENCY RELEASE CABLE GUARD	1	
- 25	25-68138- 3	• BRACKET, EXT STORES EMER RELEASE PULLEY	1	
- 26	25-68136- 1	• PLATE ASSEMBLY, EXTERNAL STORES EMER RELEASE PULLEY BRACKET	1	
- 27	AN665-21L	• TERMINAL, CLEVIS	1	
	AN315-3L	• NUT, USE WITH INDEX 27	1	
- 28	1HS1	• SWITCH (MCS)	1	A
- 29	MDH2721	• ACTUATOR (MCS)	1	A
	25-68140- 1	• SUPPORT ASSY, RAM AIR PUMP RELEASE CABLE AFT	1	A
	25-68140-301	• SUPPORT ASSY, RAM AIR PUMP RELEASE CABLE AFT	1	B-F
- 30	AN515-6R28	• • SCREW	2	A
	AN960D6L	• • WASHER	2	A
	AN960D6	• • WASHER	2	A
	AN365-632	• • NUT	2	A
- 31	25-68140- 17	• • SPACER	1	A
- 32	25-68140- 11	• • ARM	1	A
		ATTACHING PARTS		
- 33	AN4-17A	• • BOLT	1	
	AN960D416L	• • WASHER	1	
	NAS76A4-026	• • SPACER	1	
	NAS76A4-010	• • SPACER	1	
	AN960D416	• • WASHER	3	
	AN365-428	• • NUT	1	
		¤----¤-¤-¤----¤		

Center Fuselage

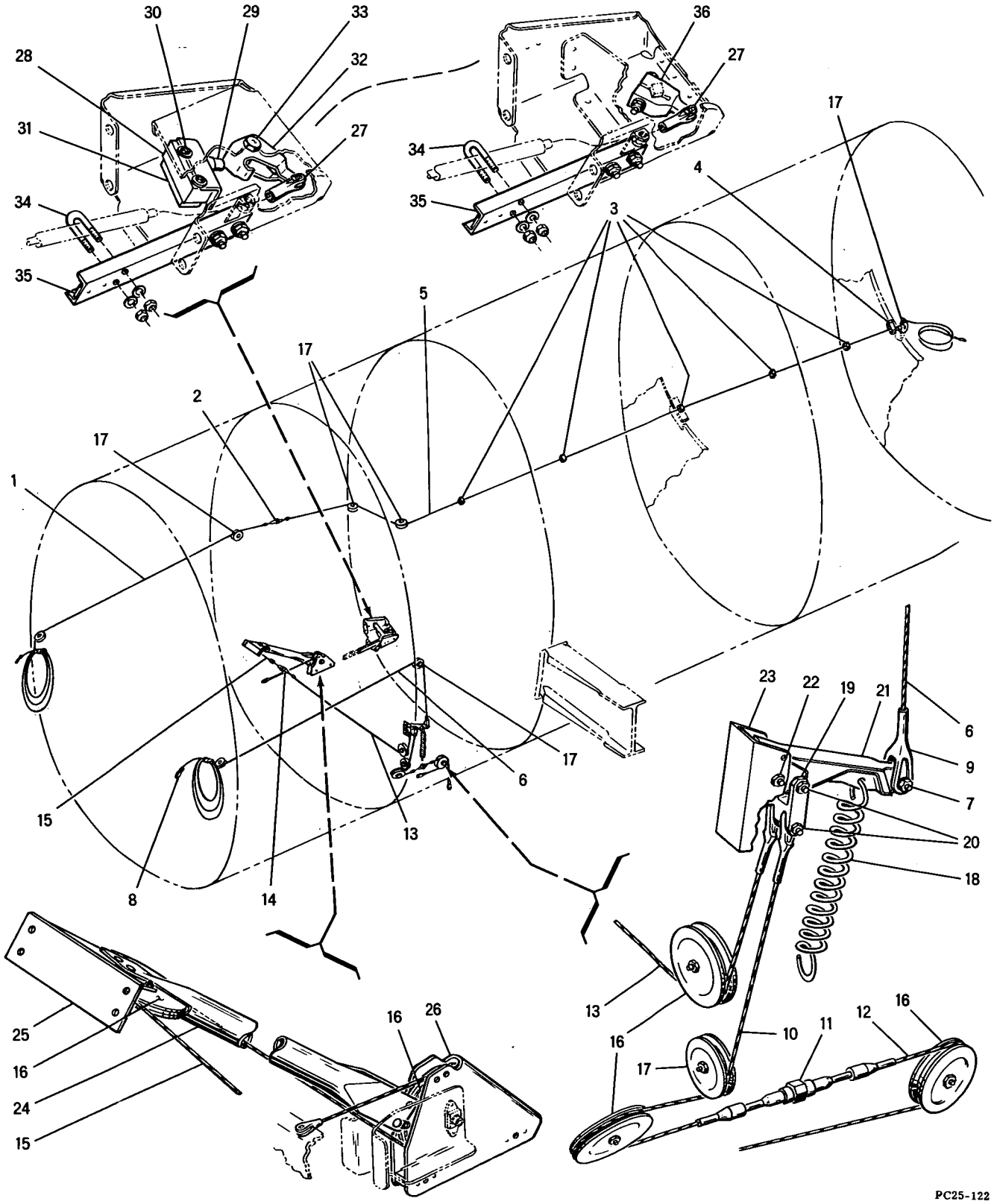

Figure 115 -- Center Fuselage Auxiliary Controls Installation

FIGURE & INDEX NUMBER	PART NUMBER	1 2 3 4 5 6 7 DESCRIPTION	UNITS PER ASS'Y	USABLE ON CODE
115 - 34	15-83277- 3	• • BOLT, CABLE SUPPORT U	1	
	AN960D10	• • WASHER, USE WITH INDEX 34	2	
	AN365-1032	• • NUT, USE WITH INDEX 34	2	
- 35	25-68140- 13	• • CLIP	1	
- 36	25-68141- 1	• ARM ASSEMBLY, RAM AIR PUMP PNEUMATIC SEQUENCE VALVE	1	B-F

Center Fuselage

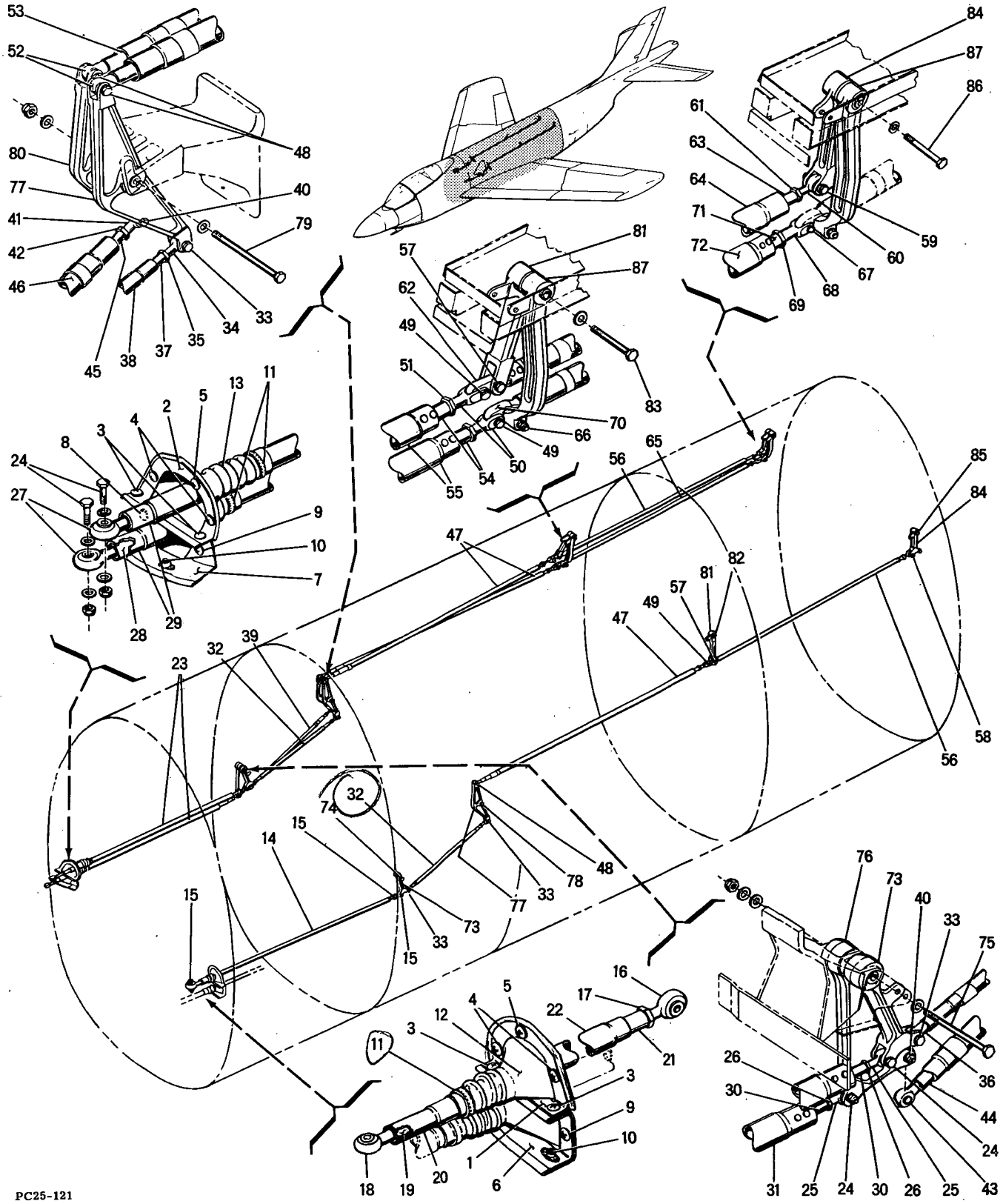

Figure 116 - Center Fuselage Surface Controls Installation

FIGURE & INDEX NUMBER	PART NUMBER	1 2 3 4 5 6 7 DESCRIPTION	UNITS PER ASS'Y	USABLE ON CODE
116 -	25-61200- 1	CONTROLS INSTALLATION, CENTER FUSELAGE SURFACE, SEE FIG. 106-23 FOR NEXT HIGHER ASSEMBLY	REF	
- 1	25-61086- 3	• PLATE, FUME SEAL UPPER LH	1	
- 2	25-61086- 4	• PLATE, FUME SEAL UPPER RH	1	
		ATTACHING PARTS		
- 3	NAS229-9	• SCREW	4	
	AN960D10L	• WASHER	4	
	AN960D10	• WASHER	4	
	AN364-1032	• NUT	4	
- 4	NAS229-10	• SCREW	4	
	AN960D10	• WASHER	4	
- 5	NAS229-11	• SCREW	2	
	AN960D10	• WASHER	2	
		¤----¤-¤-¤----¤		
- 6	25-61087- 1	• PLATE ASSEMBLY, FUME SEAL LOWER LH	1	
- 7	25-61087- 2	• PLATE ASSEMBLY, FUME SEAL LOWER RH	1	
		ATTACHING PARTS		
- 8	NAS229-9	• SCREW	2	
	AN960D10	• WASHER	2	
- 9	NAS229-10	• SCREW	2	
	AN960D10	• WASHER	2	
- 10	NAS229-9	• SCREW	4	
	AN960D10L	• WASHER	4	
		¤----¤-¤-¤----¤		
- 11	A3122-20-59	• CLAMP (TIN)	4	
- 12	25-61088- 1	• SEAL ASSY, FUME LH	1	
- 13	25-61088- 2	• SEAL ASSY, FUME RH	1	
- 14	25-61037- 37	• ROD ASSEMBLY, STABILATOR CONTROL	1	
		ATTACHING PARTS		
- 15	NAS464-4A15	• BOLT	2	
	AN960D416	• WASHER	4	
	AN364-428	• NUT	2	
		¤----¤-¤-¤----¤		
- 16	25-61091- 3	• • BEARING, SPECIAL ROD END, ALTERED FROM RE4S10 OR RE4H6 SPEC E3693 (FAF)	1	
- 17	AN316-8R	• • NUT	1	
	25-61037-137	• • ROD ASSEMBLY	1	
- 18	RE4H6	• • • BEARING, ROD END (FAF)	1	
- 19	25-61070- 3	• • • ADAPTER, ROD END	1	
- 20	25-61069- 3	• • • ADAPTER, SIZED ROD END	1	
- 21	25-61089- 5	• • • ADAPTER, ADJUSTABLE ROD END	1	
- 22	25-61037-237	• • • TUBE	1	
- 23	25-61037- 39	• ROD ASSEMBLY, STABILATOR & RUDDER CONTROL	2	
		ATTACHING PARTS		
- 24	NAS464-4A15	• BOLT	4	
	AN960D416	• WASHER	8	
	AN364-428	• NUT	4	
		¤----¤-¤-¤----¤		
- 25	RE4M6	• • BEARING, ROD END (FAF)	1	
- 26	AN316-6R	• • NUT	1	
	25-61037-139	• • ROD ASSEMBLY	1	
- 27	RE4H6	• • • BEARING, ROD END (FAF)	1	
- 28	25-61070- 3	• • • ADAPTER, ROD END	1	
- 29	25-61069- 5	• • • ADAPTER, SIZED ROD END	1	
- 30	25-61089- 3	• • • ADAPTER, ADJUSTABLE ROD END	1	
- 31	25-61037-239	• • • TUBE	1	
- 32	25-61037- 41	• ROD ASSEMBLY, STABILATOR CONTROL	2	
		ATTACHING PARTS		
- 33	NAS464-4A15	• BOLT	4	
	AN960D416	• WASHER	8	
	AN364-428	• NUT	4	
		¤----¤-¤-¤----¤		
- 34	RE4M6	• • BEARING, ROD END (FAF)	1	
- 35	AN316-6R	• • NUT	1	
	25-61037-141	• • ROD ASSEMBLY	1	
- 36	RE4M6	• • • BEARING, ROD END (FAF)	1	
- 37	25-61066- 3	• • • ADAPTER, ADJUSTABLE ROD END	1	
- 38	25-61037-241	• • • TUBE	1	
- 39	25-61037- 43	• ROD ASSEMBLY, RUDDER CONTROL	1	
		ATTACHING PARTS		
- 40	NAS464-4A15	• BOLT	2	
	AN960D416	• WASHER	4	
	AN364-428	• NUT	2	
		¤----¤-¤-¤----¤		

FIGURE & INDEX NUMBER	PART NUMBER	1 2 3 4 5 6 7 DESCRIPTION	UNITS PER ASS'Y	USABLE ON CODE
116 - 41	RE4M6	• • BEARING, ROD END (FAF)	1	
- 42	AN316-6R	• • NUT	1	
	25-61037-143	• • ROD ASSEMBLY	1	
- 43	RE4H6	• • • BEARING, ROD END (FAF)	1	
- 44	25-61070- 3	• • • ADAPTER, ROD END	1	
- 45	25-61073- 3	• • • ADAPTER, ADJUSTABLE ROD END	1	
- 46	25-61037-243	• • • TUBE	1	
- 47	25-61037- 45	• ROD ASSEMBLY, STABILATOR & RUDDER CONTROL	3	
		ATTACHING PARTS		
- 48	NAS464-4A15	• BOLT	3	
	AN960D416	• WASHER	6	
	AN364-428	• NUT	3	
- 49	NAS464-4A16	• BOLT	3	
	AN960D416	• WASHER	6	
	AN364-428	• NUT	3	
		¤----¤-¤-¤----¤		
- 50	25-61068- 3	• • ROD END, CLEVIS	1	
- 51	AN316-10R	• • NUT	1	
	25-61037-145	• • ROD ASSEMBLY	1	
- 52	RE4H6	• • • BEARING, ROD END (FAF)	1	
- 53	25-61090- 3	• • • ADAPTER, FIXED ROD END	1	
- 54	25-61089- 7	• • • ADAPTER, ADJUSTABLE ROD END	1	
- 55	25-61037-245	• • • TUBE	1	
- 56	25-61037- 47	• ROD ASSEMBLY, STABILATOR CONTROL	2	
		ATTACHING PARTS		
- 57	NAS464-4A16	• BOLT	2	
	AN960D416	• WASHER	2	
	AN364-428	• NUT	2	
- 58	NAS464-4A15	• BOLT	1	
	AN960D416	• WASHER	1	
	AN364-428	• NUT	1	
- 59	NAS464-4-15	• BOLT	1	
	AN960D416	• WASHER	1	
	AN320-4	• NUT	1	
	AN380-2-3	• PIN, COTTER	1	
		¤----¤-¤-¤----¤		
- 60	RE4M6	• • BEARING, ROD END (FAF)	1	
- 61	AN316-6R	• • NUT	1	
	25-61037-147	• • ROD ASSEMBLY	1	
- 62	25-61074- 1	• • • ROD END ASSEMBLY, 2 BEARING	1	
	AN206DSP4	• • • • BEARING	2	
- 63	25-61089- 3	• • • ADAPTER, ADJUSTABLE ROD END	1	
- 64	25-61037-247	• • • TUBE	1	
- 65	25-61037- 49	• ROD ASSEMBLY, RUDDER CONTROL	1	
		ATTACHING PARTS		
- 66	NAS464-4A23	• BOLT	1	
	4M36-02004	• WASHER (MDA)	1	
	AN960D416	• WASHER	1	
	AN364-428	• NUT	1	
- 67	NAS464-4A16	• BOLT	1	
	AN960D416	• WASHER	2	
	AN364-428	• NUT	1	
		¤----¤-¤-¤----¤		
- 68	25-61068- 3	• • ROD END, CLEVIS	1	
- 69	AN316-10R	• • NUT	1	
	25-61037-149	• • ROD ASSEMBLY	1	
- 70	25-61074- 1	• • • ROD END ASSEMBLY, 2 BEARING	1	
	AN206DSP4	• • • • BEARING	2	
- 71	25-61089- 3	• • • ADAPTER, ADJUSTABLE ROD END	1	
- 72	25-61037-249	• • • TUBE	1	
- 73	25-61201- 1	• BELL CRANK ASSEMBLY, STABILATOR CONTROL	2	
		ATTACHING PARTS		
- 74	NAS464-6A24	• BOLT, LEFT SIDE	1	
	AN960D616	• WASHER	2	
	AN364-624	• NUT	1	
- 75	NAS464-6A51	• BOLT, RIGHT SIDE	1	
	AN960D616	• WASHER	3	
	AN364-624	• NUT	1	
		¤----¤-¤-¤----¤		
	DW6	• • BEARING (FAF)	1	
- 76	25-61208- 1	• BELL CRANK ASSEMBLY, RUDDER CONTROL	1	
	DW6	• • BEARING (FAF)	1	
- 77	25-61202- 1	• BELL CRANK ASSEMBLY, STABILATOR CONTROL	2	
		ATTACHING PARTS		
- 78	NAS464-5A20	• BOLT, LEFT SIDE	1	
	AN960D516	• WASHER	2	
	AN364-524	• NUT	1	

FIGURE & INDEX NUMBER	PART NUMBER	1 2 3 4 5 6 7 DESCRIPTION	UNITS PER ASS'Y	USABLE ON CODE
116 -		ATTACHING PART(CONT)		
- 79	NAS464-5A59	• BOLT, RIGHT SIDE	1	
	AN960D516	• WASHER	2	
	AN364-524	• NUT	1	
		¤----¤-¤-¤----¤		
	DW5	• • BEARING (FAF)	1	
- 80	25-61203- 1	• BELL CRANK ASSEMBLY, RUDDER CONTROL	1	
	DW5	• • BEARING (FAF)	1	
- 81	25-61204- 1	• IDLER ASSEMBLY, STABILATOR CONTROL	2	
		ATTACHING PARTS		
- 82	AN175H14A	• BOLT, LEFT SIDE	1	
	AN960D516	• WASHER	1	
- 83	AN175H24A	• BOLT, RIGHT SIDE	1	
	AN960D516	• WASHER	1	
		¤----¤-¤-¤----¤		
	DW5	• • BEARING (FAF)	1	
- 84	25-61206- 1	• IDLER ASSEMBLY, STABILATOR CONTROL	2	
		ATTACHING PARTS		
- 85	AN175H14A	• BOLT, LEFT SIDE	1	
	AN960D516	• WASHER	1	
- 86	AN175H24A	• BOLT, RIGHT SIDE	1	
	AN960D516	• WASHER	1	
		¤----¤-¤-¤----¤		
	DW5	• • BEARING (FAF)	1	
- 87	25-61205- 1	• IDLER ASSEMBLY, RUDDER CONTROL	2	
	DW5	• • BEARING (FAF)	1	

Center Fuselage

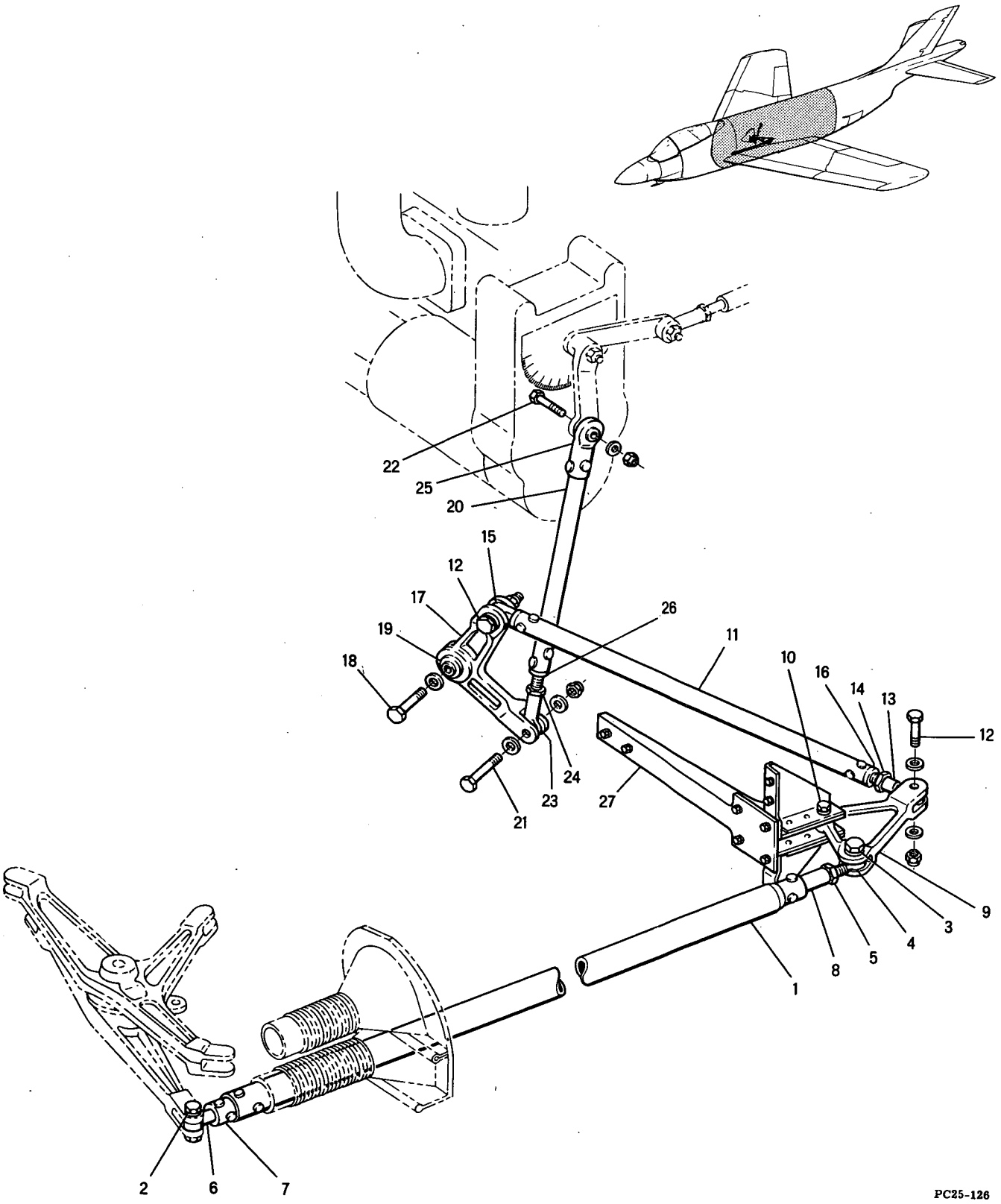

Figure 117 -- Center Fuselage Engine Controls Installation

FIGURE & INDEX NUMBER	PART NUMBER	1 2 3 4 5 6 7 DESCRIPTION	UNITS PER ASS'Y	USABLE ON CODE
117 -	25-54110- 1	CONTROLS INSTALLATION, CENTER FUSELAGE ENGINE, SEE FIG. 106-20 FOR NEXT HIGHER ASSEMBLY	REF	A-B
	25-54110-303	CONTROLS INSTALLATION, CENTER FUSELAGE ENGINE, SEE FIG. 106-20 FOR NEXT HIGHER ASSEMBLY	REF	C
	25-54110-301	CONTROLS INSTALLATION, CENTER FUSELAGE ENGINE, SEE FIG. 106-20 FOR NEXT HIGHER ASSEMBLY	REF	D-F
- 1	25-61037- 31	• ROD ASSY, CONTROLS	1	
		ATTACHING PARTS		
- 2	NAS464-4A14	• BOLT	1	
	AN960D416L	• WASHER	2	
	AN364-428	• NUT	1	
- 3	NAS464-4A15	• BOLT	1	
	AN960D416	• WASHER	2	
	AN364-428	• NUT	1	
		¤----¤-¤-¤----¤		
- 4	RE4M6	• • BEARING, ROD END (FAF)	1	
- 5	AN316-6R	• • NUT	1	
	25-61037-131	• • TUBE ASSY	1	
- 6	RE4M6	• • • BEARING, ROD END (FAF)	1	
- 7	25-61071- 3	• • • ADAPTER, ROD END	1	
- 8	25-61067- 3	• • • ADAPTER, ADJUSTABLE ROD END	1	
	25-61037-231	• • • TUBE	1	
- 9	25-54104- 1	• BELL CRANK ASSEMBLY, ENGINE CONTROLS	1	
		ATTACHING PARTS		
- 10	NAS464-4A19	• BOLT	1	
	AN960D416L	• WASHER	1	
	AN960D416	• WASHER	1	
	AN364-428	• NUT	1	
		¤----¤-¤-¤----¤		
	DW4	• • BEARING (FAF)	1	A-C
- 11	25-61037- 33	• ROD ASSY, CONTROLS	1	A-C
		ATTACHING PARTS		
- 12	NAS464-4A15	• BOLT	2	
	AN960D416	• WASHER	4	
	AN364-428	• NUT	2	
		¤----¤-¤-¤----¤		
- 13	RE4F5	• • BEARING, ROD END (FAF)	1	A-C
- 14	AN316-5R	• • NUT	1	A-C
	25-61037-133	• • TUBE ASSY	1	A-C
- 15	25-61092- 3	• • • BEARING, SPECIAL ROD END, ALTERED FROM RE4H6 (FAF)	1	A-C
- 16	AN490HT10P	• • • ROD END, THREADED	1	A-C
	25-61037-233	• • • TUBE	1	A-C
- 17	25-54105- 1	• BELL CRANK ASSEMBLY, ENGINE CONTROLS	1	
		ATTACHING PARTS		
- 18	NAS464-5A22	• BOLT	1	
	AN960D516L	• WASHER	1	
	AN960D516	• WASHER	1	
	AN364-524	• NUT	1	
		¤----¤-¤-¤----¤		
- 19	DW5	• • BEARING (FAF)	1	
- 20	25-61037- 35	• ROD ASSY, CONTROLS	1	A-C
		ATTACHING PARTS		
- 21	NAS464-4A15	• BOLT	1	
	AN960D416	• WASHER	2	
	AN364-428	• NUT	1	
- 22	NAS464-4A14	• BOLT	1	
	4M36-02001	• WASHER (MDA)	1	
	AN364-428	• NUT	1	
		¤----¤-¤-¤----¤		
- 23	RE4F5	• • BEARING, ROD END (FAF)	1	A-C
- 24	AN316-5R	• • NUT	1	A-C
	25-61037-135	• • TUBE ASSY	1	A-C
- 25	19-61075- 5	• • • BEARING, ROD END, ALTERED FROM RE4S10 OR RE4H6 SPEC E3693 (FAF)	1	A-C
- 26	AN490HT15P	• • • ROD END, THREADED	1	A-C
	25-61037-235	• • • TUBE	1	A-C
- 27	25-54114- 1	• BRACKET ASSY, ENGINE CONTROL	1	C
		ATTACHING PARTS		
	AN3-6A	• BOLT	10	
	AN960D10	• WASHER	10	
		¤----¤-¤-¤----¤		

Center Fuselage

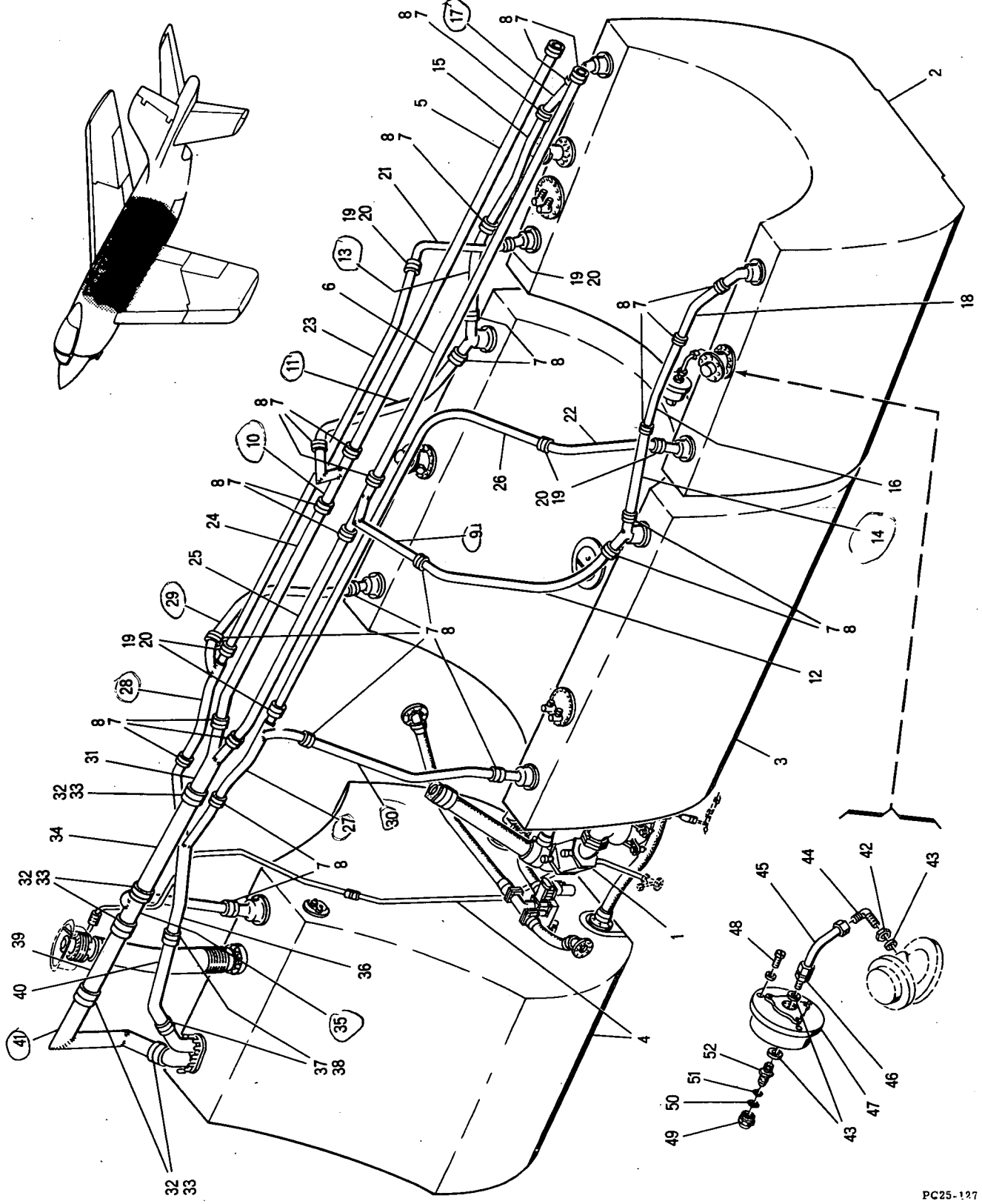

Figure 118 -- Fuselage Fuel and Vent System Installation

FIGURE & INDEX NUMBER	PART NUMBER	1 2 3 4 5 6 7 DESCRIPTION	UNITS PER ASS'Y	USABLE ON CODE
118 -	25-58000-301	SYSTEM INSTL, FUSELAGE FUEL, SEE FIG. 106-19 FOR NEXT HIGHER ASSY	REF	A-B
	25-58000-303	SYSTEM INSTL, FUSELAGE FUEL, SEE FIG. 106-19 FOR NEXT HIGHER ASSY	REF	C
	25-58000-309	SYSTEM INSTL, FUSELAGE FUEL, SEE FIG. 106-19 FOR NEXT HIGHER ASSY	REF	D-F
- 1	25-58010-301	• SYSTEM INSTALLATION, ENGINE ACCESSORY COMPARTMENT FUEL, SEE FIG. 122	1	A-B
	25-58017- 3	• SYSTEM INSTALLATION, ENGINE ACCESSORY COMPARTMENT FUEL, SEE FIG. 122	1	C
	25-58017- 1	• SYSTEM INSTALLATION, ENGINE ACCESSORY COMPARTMENT FUEL, SEE FIG. 122	1	D-F
- 2	25-58008-301	• TANK INSTALLATION, AFT FUEL, SEE FIG. 121	1	
- 3	25-58007-301	• TANK INSTALLATION, CENTER FUEL, SEE FIG. 120	1	A-B
	25-58007-303	• TANK INSTALLATION, CENTER FUEL, SEE FIG. 120	1	C-F
- 4	25-58006-301	• TANK INSTALLATION, FORWARD FUEL, SEE FIG. 119	1	A-C
	25-58006-303	• TANK INSTALLATION, FORWARD FUEL, SEE FIG. 119	1	D-F
	25-58011- 1	• SYSTEM INSTALLATION, FUSELAGE FUEL VENT	1	
- 5	25-58172- 35	• • TUBE ASSEMBLY, FUSELAGE FUEL VENT	1	
- 6	25-58172- 37	• • TUBE ASSEMBLY, FUSELAGE FUEL VENT	1	
- 7	C09A014	• • CONNECTOR (FLRE)	27	
- 8	C09A303	• • SEAL (FLRE)	27	
- 9	25-58169- 1	• • TUBE ASSEMBLY, FUSELAGE FUEL VENT WELDED LH	1	
- 10	25-58169- 2	• • TUBE ASSEMBLY, FUSELAGE FUEL VENT WELDED RH	1	
- 11	25-58172- 21	• • TUBE ASSEMBLY, FUSELAGE FUEL VENT	1	
- 12	25-58172- 19	• • TUBE ASSEMBLY, FUSELAGE FUEL VENT	1	
- 13	25-58172- 25	• • TUBE ASSEMBLY, FUSELAGE FUEL VENT	1	
- 14	25-58172- 23	• • TUBE ASSEMBLY, FUSELAGE FUEL VENT	1	
- 15	25-58172- 29	• • TUBE ASSEMBLY, FUSELAGE FUEL VENT	1	
- 16	25-58172- 27	• • TUBE ASSEMBLY, FUSELAGE FUEL VENT	1	
- 17	25-58172- 33	• • TUBE ASSEMBLY, FUSELAGE FUEL VENT	1	
- 18	25-58172- 31	• • TUBE ASSEMBLY, FUSELAGE FUEL VENT	1	
- 19	C09A012	• • CONNECTOR (FLRE)	6	
- 20	C09A302	• • SEAL (FLRE)	6	
- 21	25-58213- 7	• • TUBE ASSEMBLY, FUSELAGE FUEL VENT SYSTEM	1	
- 22	25-58213- 9	• • TUBE ASSEMBLY, FUSELAGE FUEL VENT SYSTEM	1	
- 23	25-58172- 15	• • TUBE ASSEMBLY, FUSELAGE FUEL VENT	1	
- 24	25-58172- 13	• • TUBE ASSEMBLY, FUSELAGE FUEL VENT	1	
- 25	25-58172- 11	• • TUBE ASSEMBLY, FUSELAGE FUEL VENT	1	
- 26	25-58172- 17	• • TUBE ASSEMBLY, FUSELAGE FUEL VENT	1	
- 27	25-58167-301	• • VENT ASSY, CENTER FUSELAGE FUEL CELL CLIMB WELDED LH	1	
- 28	25-58167-302	• • VENT ASSY, CENTER FUSELAGE FUEL CELL CLIMB WELDED RH	1	
- 29	25-58172- 9	• • TUBE ASSEMBLY, FUSELAGE FUEL VENT	1	
- 30	25-58172- 7	• • TUBE ASSEMBLY, FUSELAGE FUEL VENT	1	
- 31	25-58168- 1	• • TEE ASSEMBLY, FUSELAGE FUEL VENT WELDED	1	
- 32	C09A020	• • CONNECTOR (FLRE)	5	
- 33	C09A306	• • SEAL (FLRE)	5	
- 34	25-58213- 5	• • TUBE ASSEMBLY, FUSELAGE FUEL VENT SYSTEM	1	
- 35	25-58212- 1	• • TUBE ASSEMBLY, FUSELAGE FUEL VENT	1	
- 36	25-58171- 1	• • VENT ASSEMBLY, FUSELAGE FUEL WELDED	1	
- 37	C09A016	• • CONNECTOR (FLRE)	2	
- 38	C09A304	• • SEAL (FLRE)	2	
- 39	25-58213- 3	• • TUBE ASSEMBLY, FUSELAGE FUEL VENT SYSTEM	1	
- 40	25-58172- 5	• • TUBE ASSEMBLY, FUSELAGE FUEL VENT	1	
- 41	25-58170- 1	• • VENT ASSEMBLY, FORWARD FUEL TANK WELDED	1	
- 42	AN924-4D	• • NUT	1	
- 43	MS29512-4	• • GASKET	3	
- 44	AN833-4D	• • ELBOW	1	
- 45	25-58172- 43	• • TUBE ASSEMBLY, FUSELAGE FUEL VENT	1	
- 46	AN815-4D	• • UNION	1	
- 47	69000	• • SWITCH, 2 PSI PRESSURE DIFFERENTIAL (ESSX) MCDONNELL SPEC 25-77011-1	1	
		ATTACHING PARTS		
- 48	AN502-10-4	• • SCREW	3	
	AN960D10	• • WASHER	3	
		¤----¤-¤-¤----¤		
	15-50106- 1	• • VENT ASSY, FUEL CONTROL & TACH GENERATOR SEAL DRAIN	1	
- 49	AN818-4D	• • • NUT	1	
- 50	15-50106- 3	• • • SCREEN	1	
- 51	15-50107- 3	• • • WASHER, FUEL CONTROL & TACH GENERATOR VENT	1	
- 52	AN815-4D	• • • UNION	1	

Center Fuselage

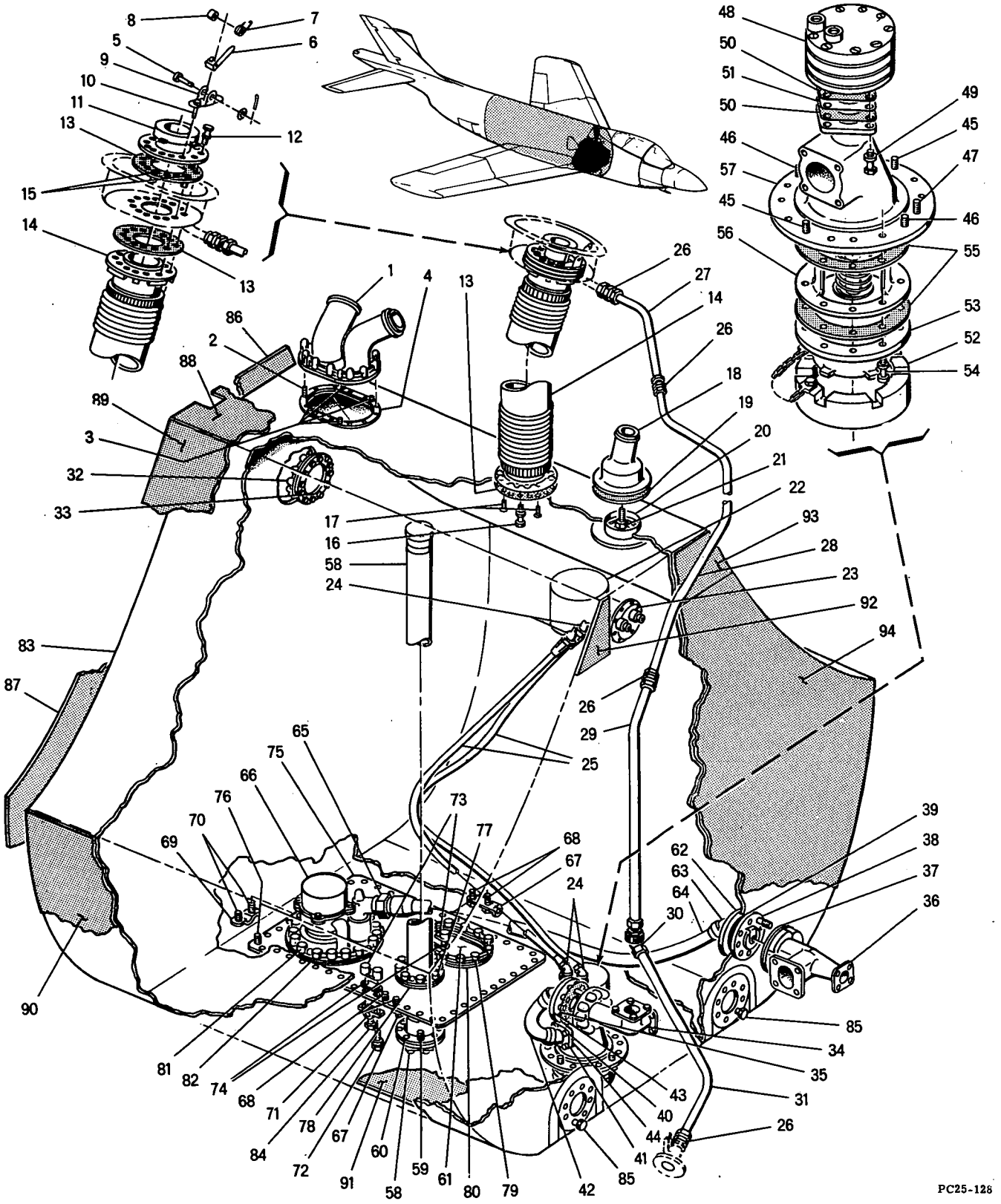

PC25-128

Figure 119 - Forward Fuel Tank Installation

FIGURE & INDEX NUMBER	PART NUMBER	1 2 3 4 5 6 7 DESCRIPTION	UNITS PER ASS'Y	USABLE ON CODE
119 -	25-58006-301	TANK INSTALLATION, FORWARD FUEL, SEE FIG. 118-4 FOR NEXT HIGHER ASSEMBLY	REF	A-C
	25-58006-303	TANK INSTALLATION, FORWARD FUEL, SEE FIG. 118-4 FOR NEXT HIGHER ASSEMBLY	REF	D-F
- 1	25-58109- 1	• FITTING ASSEMBLY, CLIMB VENT	1	
		ATTACHING PARTS		
- 2	AN4H6A	• BOLT	12	
	AN960D416	• WASHER	12	
- 3	AN509-10R4	• SCREW	4	
		¤----¤-¤-¤----¤		
	1191-4CNX1/2	• • INSERT (AF)	12	
- 4	25-58093- 3	• GASKET, CLIMB VENT FITTING	1	
- 5	AN392-29	• PIN FLAT HEAD		
	AN960-4	• WASHER	1	
	AN380-2-1	• PIN, COTTER	1	
- 6	25-58145- 3	• ARM, SCUPPER DOOR SAFETY	1	
- 7	25-58147- 3	• SPRING, SCUPPER DOOR SAFETY ARM	1	
- 8	NAS42DD4- 22	• SPACER	1	
- 9	25-58146- 3	• BRACKET, SCUPPER DOOR SAFETY ARM	1	
		ATTACHING PARTS		
- 10	AN4H5A	• BOLT	2	
	AN960D416L	• WASHER	2	
		¤----¤-¤-¤----¤		
- 11	25-58113- 3	• NECK ASSEMBLY, FUEL TANK FILLER CAP	1	
		ATTACHING PARTS		
- 12	AN4H5A	• BOLT	10	
	AN960D416	• WASHER	10	
		¤----¤-¤-¤----¤		
	NAF1025-2	• • CAP ASSY	1	
	RS100	• • LINK (RYY)	1	
	NAF1088-2C6	• • CHAIN	1	
	AN381-2-8	• • PIN, COTTER	1	
- 13	25-58076- 13	• GASKET, FUEL SYSTEM	3	
- 14	25-58094- 1	• TUBE ASSEMBLY, FUEL TANK FILLER NECK, FOR FUTURE PROCUREMENT USE 25-58094-301	1	A-C
	25-58094-301	• TUBE ASSEMBLY, FUEL TANK FILLER NECK, USE FOR FUTURE PROCUREMENT TO REPLACE 25-58094-1	1	
		ATTACHING PARTS		
- 15	AN509-10R4	• SCREW	4	
- 16	AN4H7A	• BOLT	12	
	AN960D416	• WASHER	12	
- 17	AN509-10R5	• SCREW	4	
		¤----¤-¤-¤----¤		
- 18	25-58127- 1	• ELBOW ASSY, CENTER & FORWARD FUEL TANK VENT	1	
	RD207SB9L	• • INSERT (ROSN)	1	
	RL31SB9	• • RING, LOCK (ROSN)	1	
- 19	25-58076- 53	• GASKET, FUEL SYSTEM	1	
- 20	1111-526825	• SPIDER ASSEMBLY, DIVE VENT (PA)	1	
		ATTACHING PARTS		
- 21	NAS428H5-24	• BOLT	1	
	AN960D516	• WASHER	1	
		¤----¤-¤-¤----¤		
- 22	1323-518230	• VALVE, SIDE MOUNTED SOLENOID PILOT (PA) PRESS. FUELING & DEFUELING (PA) MCDONNELL SPEC 25-58088-13	1	
		ATTACHING PARTS		
- 23	AN4H10A	• BOLT	8	
	AN960D416	• WASHER	8	
		¤----¤-¤-¤----¤		
- 24	AN837-4D	• ELBOW	4	
	AN924-4D	• NUT, USE WITH INDEX 24	4	
	MS29512-4	• GASKET, USE WITH INDEX 24	4	
- 25	MS28741-4-0520	• HOSE ASSEMBLY	2	
- 26	AN815-10D	• UNION	4	
- 27	25-58120- 5	• TUBE ASSEMBLY, FUEL SYSTEM	1	
- 28	25-58120- 17	• TUBE ASSEMBLY, FUEL SYSTEM	1	
- 29	25-58120- 15	• TUBE ASSEMBLY, FUEL SYSTEM	1	
- 30	AN837-10D	• ELBOW	1	
	AN960D1416	• WASHER, USE WITH INDEX 30	2	
	AN924-10D	• NUT, USE WITH INDEX 30	1	
- 31	25-58120- 11	• TUBE ASSEMBLY, FUEL SYSTEM	1	
- 32	GRA400-12H32	• FLANGE (NEUS)	1	A-C
		ATTACHING PARTS		
	AN4H7A	• BOLT	12	
	AN960D416	• WASHER	12	
		¤----¤-¤-¤----¤		

FIGURE & INDEX NUMBER	PART NUMBER	1 2 3 4 5 6 7 DESCRIPTION	UNITS PER ASS'Y	USABLE ON CODE
119 - 33	25-58216- 3	• PLATE, FUEL TANK COVER	1	A-C
- 34	25-58080- 3	• MANIFOLD, WING FUEL TRANSFER LINE	1	
		ATTACHING PARTS		
	AN4H10A	• BOLT	8	
	AN960D416	• WASHER	8	
		¤----¤-¤-¤----¤		
- 35	25-58076- 29	• GASKET, FUEL SYSTEM	1	
- 36	25-58063- 3	• MANIFOLD, FUEL TRANSFER SYSTEM, FOR FUTURE PROCUREMENT USE 25-58063-5	1	A-C
	25-58063- 5	• MANIFOLD, FUEL TRANSFER SYSTEM, USE FOR FUTURE PROCUREMENT TO REPLACE 25-58063-3	1	
		ATTACHING PARTS		
	AN4H14A	• BOLT	8	
	AN960D416	• WASHER	8	
	AN509-10R8	• SCREW	4	
		¤----¤-¤-¤----¤		
- 37	25-58076- 27	• GASKET, FUEL SYSTEM	1	
- 38	1111-526831	• PLATE ASSEMBLY (PA)	1	
- 39	25-58076- 25	• GASKET, FUEL SYSTEM	1	
	25-58149-301	• HOSE ASSEMBLY, PRESSURE FUELING UNIT	1	
		ATTACHING PARTS		
- 40	AN4H6A	• BOLT	4	
	AN960D416	• WASHER	4	
		¤----¤-¤-¤----¤		
- 41	AN756D24	• • FLANGE	1	
	9745-24D	• • NIPPLE (AQ)	2	
	212-24D	• • SOCKET (AQ)	2	
- 42	25-58149- 9	• • HOSE	1	
- 43	926622-24	• • FLANGE (AQ)	1	
- 44	25-58076- 23	• GASKET, FUEL SYSTEM	1	
	1327-522241	• INLET ASSEMBLY, FWD FUEL TANK PRESS. FUELING & DEFUELING (PA) MCDONNELL SPEC 25-58088-1	1	A-C
		ATTACHING PARTS		
- 45	AN4H14A	• BOLT	2	
	4M36-02034	• WASHER (MDA)	2	
- 46	AN4H13A	• BOLT	2	
	4M36-02034	• WASHER (MDA)	2	
- 47	AN4H5A	• BOLT	12	
	AN960D416L	• WASHER	12	
		¤----¤-¤-¤----¤		
- 48	1321-518321	• • VALVE, FUEL INLET DIAPHRAGM SHUTOFF & CHECK (PA) MCDONNELL SPEC 25-58088-23	1	
		ATTACHING PARTS		
- 49	AN4H5A	• • BOLT	4	
	AN960-416L	• • WASHER	4	
		¤----¤-¤-¤----¤		
- 50	12-548-33	• • GASKET, ORIFICE PLATE (PA) MCDONNELL SPEC 25-58088-25	2	
- 51	1429-522354	• • PLATE, FUEL INLET ORIFICE (PA) MCDONNELL SPEC 25-58088-27	1	
- 52	8-850-22	• • CAP ASSY, FUEL INLET SAFETY (PA) MCDONNELL SPEC 25-58088-19	1	
- 53	8-1050-2	• • FITTING, FUEL INLET BAYONET (PA) MCDONNELL SPEC 25-58088-21	1	
		ATTACHING PARTS		
- 54	AN500-10-12	• • SCREW	9	
	AN935-10	• • WASHER, LOCK	9	
		¤----¤-¤-¤----¤		
- 55	1427-512250	• • GASKET (PA)	2	
- 56	1327-512540	• • VALVE, INLET SHUTOFF (PA) MCDONNELL SPEC 25-58088-17	1	
- 57	1327-522300	• • HOUSING ASSY, FORWARD FUEL INLET (PA) MCDONNELL SPEC 25-58088-5	1	A-C
- 58	165-045-580	• UNIT, FORWARD FUEL TANK QUANTITY GAGE (AVEN) MCDONNELL SPEC 25-58084-3	1	
		ATTACHING PARTS		
- 59	AN4H7A	• BOLT	8	
	AN960D416L	• WASHER	8	
		¤----¤-¤-¤----¤		
- 60	25-58076- 15	• GASKET, FUEL SYSTEM	1	
- 61	25-58091- 5	• COVER, FUEL TANK HANDHOLE	1	
		ATTACHING PARTS		
	AN4H7A	• BOLT	12	
	AN960D416L	• WASHER	12	
		¤----¤-¤-¤----¤		

FIGURE & INDEX NUMBER	PART NUMBER	1 2 3 4 5 6 7 DESCRIPTION	UNITS PER ASS'Y	USABLE ON CODE
119 -	25-58148-301	• HOSE ASSY, FORWARD FUEL TANK BOOSTER PUMP	1	
- 62	926623-32	• • FLANGE (AQ)	1	
- 63	9745-32-20D	• • NIPPLE (AQ)	1	
	212-20D	• • SOCKET (AQ) USE WITH INDEX 63	1	
- 64	25-58148- 5	• • HOSE	1	
- 65	MS28740-20	• • FITTING, END	1	
- 66	TF55600-3 *	• PUMP, BOOSTER (TP)	1	
		ATTACHING PARTS		
	AN4H7A	• BOLT	16	
	AN960D416L	• WASHER	16	
		¤----¤-¤-¤----¤		
	AN814-4D	• PLUG, USE WITH INDEX 66	1	
	MS29512-4	• GASKET, USE WITH INDEX 66	1	
- 67	25-58202- 3	• SUPPORT, ELEC WIRING	2	
		ATTACHING PARTS		
- 68	AN4H6A	• BOLT	4	
	AN960D416	• WASHER	4	
		¤----¤-¤-¤----¤		
- 69	25-58198- 3	• SUPPORT, FWD FUEL TANK	1	
		ATTACHING PARTS		
- 70	AN4H6A	• BOLT	2	
	AN960D416	• WASHER	2	
		¤----¤-¤-¤----¤		
- 71	25-58188- 1	• CLIP ASSY, FUEL TANK SUPPORT	2	
		ATTACHING PARTS		
- 72	AN4H6A	• BOLT	4	
	AN960D416	• WASHER	4	
		¤----¤-¤-¤----¤		
	98477	• • RETAINER (MKL)	1	
	32-1452-048	• • NUT, BARREL (EN)	1	
- 73	25-58189- 3	• NUT, FUEL TANK SUPPORT	2	
- 74	25-58187- 3	• GASKET, FUEL TANK SUPPORT CLIP	2	
- 75	25-58112- 1	• DOOR ASSY, FORWARD FUEL TANK	1	
		ATTACHING PARTS		
- 76	AN4H5A	• BOLT	42	
	AN960D416L	• WASHER	42	
		¤----¤-¤-¤----¤		
- 77	GRA350-8H32	• • FLANGE (NEUS)	1	
		ATTACHING PARTS		
	AN509-10R6	• • SCREW	4	
		¤----¤-¤-¤----¤		
- 78	25-58076- 15	• • GASKET, FUEL SYSTEM	1	
- 79	GRA4X6-12H32	• • FLANGE (NEUS)	1	
		ATTACHING PARTS		
	AN509-10R6	• • SCREW	4	
		¤----¤-¤-¤----¤		
- 80	25-58093- 3	• • GASKET, FUEL TANK HANDHOLE COVER	1	
- 81	GRA725-16H32	• • FLANGE (NEUS)	1	
		ATTACHING PARTS		
	AN509-10R6	• • SCREW	4	
		¤----¤-¤-¤----¤		
- 82	25-58076- 7	• • GASKET, FUEL SYSTEM	1	
- 83	2F1-6-17106	• TANK, FUSELAGE SELF SEALING FUEL (GY) MCDONNELL SPEC 25-58001-1	1	A-C
		ATTACHING PARTS		
- 84	AN4-12A	• BOLT, LEFT SIDE	1	
	4M36-02034	• WASHER (MDA)	1	
	AN4-14A	• BOLT, RIGHT SIDE	1	
	4M36-02034	• WASHER (MDA)	1	
- 85	AN4H7A	• BOLT	16	
	AN960D416	• WASHER	16	
		¤----¤-¤-¤----¤		
	25-58058- 1	• BACKING ASSY, FUSELAGE FORWARD FUEL TANK	1	A-C
- 86	25-58058- 17	• • BACKING, FUSELAGE FWD FUEL TANK UPPER FWD	1	
- 87	25-58058- 25	• • BACKING, FUSELAGE FWD FUEL TANK LOWER FWD	1	
- 88	25-58058- 13	• • BACKING, FUSELAGE FWD FUEL TANK UPPER	1	A-C
- 89	25-58058- 3	• • BACKING, FUSELAGE FWD FUEL TANK UPPER SIDE	2	
- 90	25-58058- 7	• • BACKING, FUSELAGE FWD FUEL TANK LOWER SIDE	2	A-C
- 91	25-58058- 15	• • BACKING, FUSELAGE FWD FUEL TANK LOWER	2	
- 92	25-58058- 21	• • BACKING, FUSELAGE FWD FUEL TANK UPPER AFT	1	
- 93	25-58058- 9	• • BACKING, FUSELAGE FWD FUEL TANK UPPER AFT	1	
- 94	25-58058- 5	• • BACKING, FUSELAGE FWD FUEL TANK LOWER AFT	1	

* MUST BE MODIFIED BY THOMPSON PRODUCTS INC., SERVICE BULLETIN ESD130, PRIOR TO INSTALLATION.

Center Fuselage

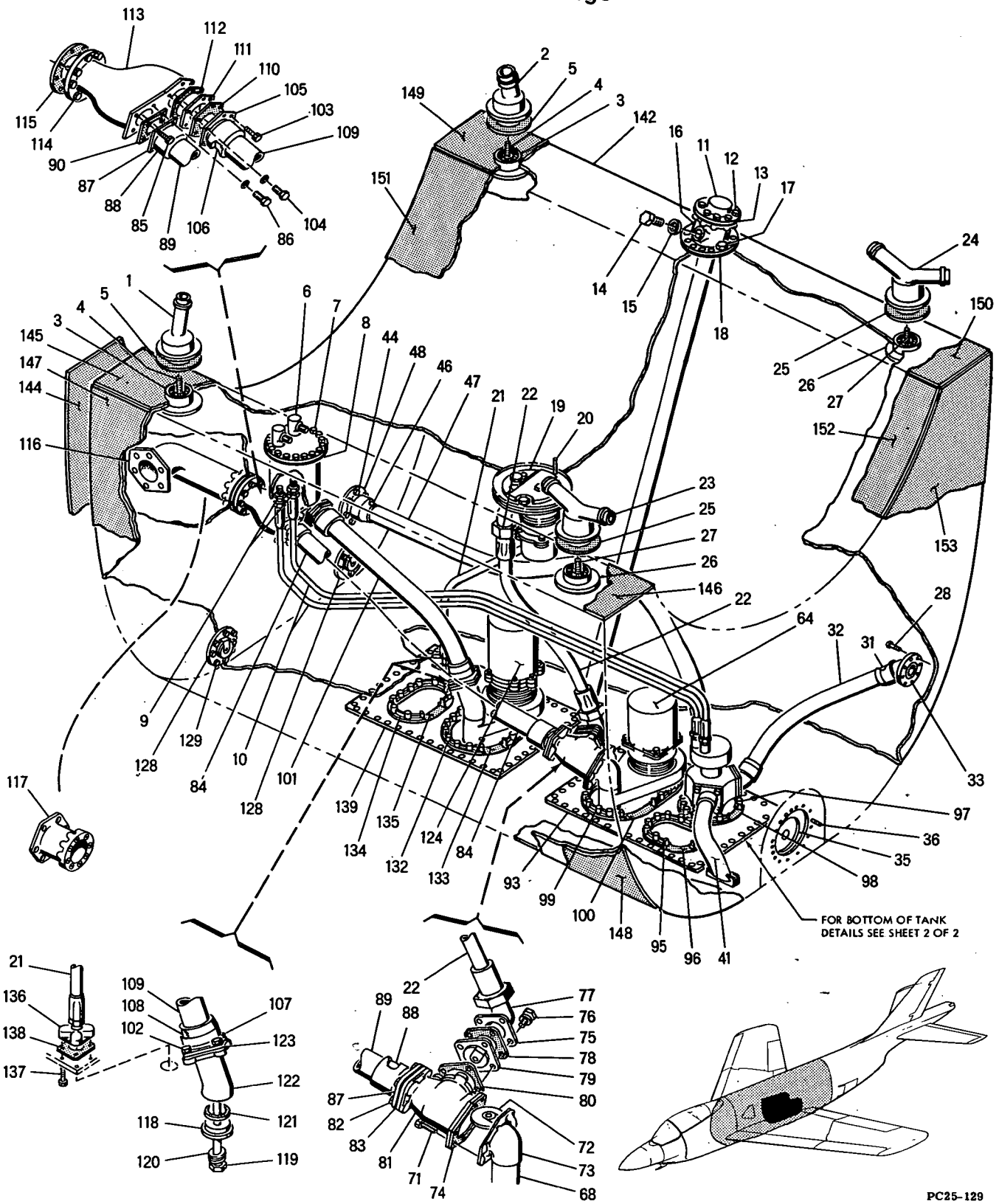

Figure 120 -- Center Fuel Tank Installation (Sheet 1 of 2)

Center Fuselage

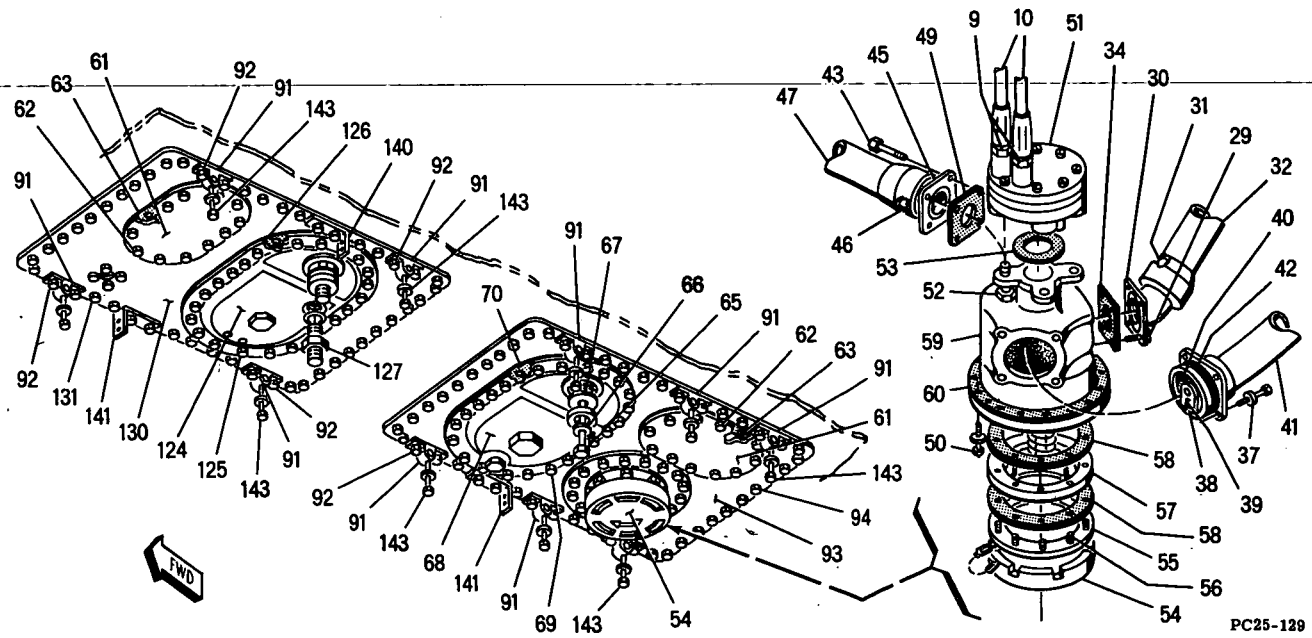

Figure 120 -- Center Fuel Tank Installation (Sheet 2 of 2)

FIGURE & INDEX NUMBER	PART NUMBER	1 2 3 4 5 6 7 DESCRIPTION	UNITS PER ASS'Y	USABLE ON CODE
120 -	25-58007-301	TANK INSTALLATION, CENTER FUEL, SEE FIG. 118-3 FOR NEXT HIGHER ASSEMBLY	REF	A-B
	25-58007-303	TANK INSTALLATION, CENTER FUEL, SEE FIG. 118-3 FOR NEXT HIGHER ASSEMBLY	REF	C-F
- 1	25-58127- 1	• ELBOW ASSY, CENTER & FORWARD FUEL TANK VENT LH	1	
- 2	25-58127- 2	• ELBOW ASSY, CENTER & FORWARD FUEL TANK VENT RH	1	
	RD207SB9L	• • INSERT (ROSN)	1	
	RL31SB9	• • RING, LOCK (ROSN)	1	
- 3	25-58128- 5	• SPIDER ASSY, FUEL TANK VENT CONNECTION	2	
		ATTACHING PARTS		
- 4	NAS428H5-24	• BOLT	2	
	AN960D516L	• WASHER	2	
		¤----¤-¤-¤----¤		
- 5	25-58076- 53	• GASKET, FUEL SYSTEM	2	
- 6	1323-518228	• VALVE, TOP MOUNTED SOLENOID PILOT, PRESSURE FUELING & DEFUELING (PA) MCDONNELL SPEC 25-58088-11	1	
		ATTACHING PARTS		
- 7	AN4H5A	• BOLT	16	
	AN960D416L	• WASHER	15	
	5M5D4	• TAB, BONDING (MDA)	1	
		¤----¤-¤-¤----¤		
- 8	25-58076- 3	• GASKET, FUEL SYSTEM	1	
- 9	AN815-4D	• UNION	4	
	MS29512-4	• GASKET, USE WITH INDEX 9	4	
- 10	MS28741-4-0730	• HOSE ASSEMBLY, PRESSURE FUELING & DEFUELING	2	
- 11	165-047-581	• UNIT, CENTER FUEL TANK QUANTITY GAGE (AVEN) MCDONNELL SPEC 25-58084-5	1	
		ATTACHING PARTS		
- 12	AN4H5A	• BOLT	8	
	AN960D416L	• WASHER	8	
		¤----¤-¤-¤----¤		
- 13	25-58076- 15	• GASKET, FUEL SYSTEM	1	
- 14	AN814-4D	• PLUG	1	
- 15	MS29512-4	• GASKET	1	

FIGURE & INDEX NUMBER	PART NUMBER	1 2 3 4 5 6 7 DESCRIPTION	UNITS PER ASS'Y	USABLE ON CODE
120 - 16	25-58059- 3	• SUPPORT, CENTER & AFT TANK, FUEL GAGE PROBE	1	
		ATTACHING PARTS		
- 17	AN4H6A	• BOLT	12	
	AN960D416L	• WASHER	12	
		¤----¤-¤-¤-----¤		
- 18	25-58076- 37	• GASKET, FUEL SYSTEM	1	
- 19	TF56700-1 *	• PUMP, BOOSTER, NEGATIVE G (TP)	1	
		ATTACHING PARTS		
- 20	AN4H11A	• BOLT	16	
	AN960D416L	• WASHER	16	
		¤----¤-¤-¤-----¤		
- 21	MS28741-8-0350	• HOSE ASSEMBLY, FUEL TRANSFER	1	
- 22	25-58218- 3	• HOSE ASSY, FUEL TRANSFER	1	
	MS28740-20	• • FITTING, END	2	
- 23	25-58126- 1	• TEE ASSY, CENTER FUEL CELL DIVE VENT LH	1	
- 24	25-58126- 2	• TEE ASSY, CENTER FUEL CELL DIVE VENT RH	1	
	RD207SB9L	• • INSERT (ROSN)	1	
	RL31SB9	• • RING, LOCK (ROSN)	1	
- 25	25-58076- 53	• GASKET, FUEL SYSTEM	2	
- 26	1111-526825	• SPIDER ASSEMBLY (PA)	2	
		ATTACHING PARTS		
- 27	NAS428H5-24	• BOLT	2	
	AN960D516L	• WASHER	2	
		¤----¤-¤-¤-----¤		
	25-58149-303	• HOSE ASSEMBLY, PRESSURE FUELING UNIT	1	
		ATTACHING PARTS		
- 28	AN4H10A	• BOLT	8	
	AN960D416L	• WASHER	8	
- 29	AN4H6A	• BOLT	4	
	AN960D416L	• WASHER	4	
		¤----¤-¤-¤-----¤		
- 30	AN756D24	• • FLANGE	1	
- 31	9745-24D	• • NIPPLE (AQ)	2	
	212-24D	• • SOCKET (AQ) USE WITH INDEX 31	2	
- 32	25-58149- 11	• • HOSE	1	
- 33	926622-24	• • FLANGE (AQ)	1	
- 34	25-58076- 23	• GASKET, FUEL SYSTEM	1	
- 35	84000	• VALVE, INTERCONNECTOR (ESSX)	1	
		ATTACHING PARTS		
- 36	AN4H10A	• BOLT	16	
	AN960D416L	• WASHER	16	
		¤----¤-¤-¤-----¤		
	25-58158- 1	• TUBE ASSEMBLY, DEFUELING VALVE SUCTION LINE	1	
		ATTACHING PARTS		
- 37	AN5H5A	• BOLT	4	
	AN960D516L	• WASHER	4	
		¤----¤-¤-¤-----¤		
- 38	1211-517140	• • PIN (PA)	1	
- 39	8730-518216	• • SPRING (PA)	1	
- 40	1211-518174	• • VALVE ASSY, SWING CHECK (PA)	1	
- 41	25-58158- 11	• • TUBE ASSY, WELDED	1	
- 42	MS29513-332	• PACKING, O RING	1	
	25-58104-301	• HOSE ASSEMBLY, INFLIGHT FUEL TRANSFER	1	
		ATTACHING PARTS		
- 43	AN4H6A	• BOLT	4	
	AN960D416L	• WASHER	4	
- 44	AN4H10A	• BOLT	8	
	AN960D416L	• WASHER	8	
		¤----¤-¤-¤-----¤		
- 45	AN756D24	• • FLANGE	1	
- 46	9714-24D	• • NIPPLE (AQ)	2	
	212-24D	• • SOCKET (AQ) USE WITH INDEX 46	2	
- 47	25-58104- 5	• • HOSE	1	
- 48	926622-24	• • FLANGE (AQ)	1	
- 49	25-58076- 23	• GASKET, FUEL SYSTEM	1	
	1327-512843	• INLET ASSY, CENTER FUEL TANK PRESS. FUELING & DEFUELING (PA) MCDONNELL SPEC 25-58088-3	1	
		ATTACHING PARTS		
- 50	AN4H7A	• BOLT	16	
	AN960D416L	• WASHER	16	
		¤----¤-¤-¤-----¤		

* MUST BE MODIFIED BY THOMPSON PRODUCTS INC., SERVICE BULLETIN ESD136, PRIOR TO INSTALLATION ON ANY AIRCRAFT.

FIGURE & INDEX NUMBER	PART NUMBER	1 2 3 4 5 6 7 DESCRIPTION	UNITS PER ASS'Y	USABLE ON CODE
120 - 51	1321-517478	• • VALVE, DUAL DIAPHRAGM SHUTOFF (PA) MCDONNELL SPEC 25-58088-9	1	
		ATTACHING PARTS		
- 52	AN4H3A	• • BOLT	4	
	AN960-416L	• • WASHER	4	
		¤----¤-¤-¤----¤		
- 53	12-548-33	• • GASKET (PA) MCDONNELL SPEC 25-58088-25	1	
- 54	8-850-22	• • CAP ASSY, SAFETY (PA) MCDONNELL SPEC 25-58088-19	1	
- 55	8-1050-2	• • FITTING, BAYONET (PA) MCDONNELL SPEC 25-58088-21	1	
		ATTACHING PARTS		
- 56	AN500-10-12	• • SCREW	9	
	AN935-10	• • WASHER, LOCK	9	
		¤----¤-¤-¤----¤		
- 57	1327-512540	• • VALVE, INLET SHUTOFF (PA) MCDONNELL SPEC 25-58088-17	1	
- 58	1427-512250	• • GASKET (PA)	2	
- 59	1327-522299	• • HOUSING ASSY, CENTER (PA) MCDONNELL SPEC 25-58088-7	1	
- 60	25-58076- 3	• GASKET, FUEL SYSTEM	1	
- 61	25-58091- 3	• COVER, FUEL TANK HANDHOLE	2	
		ATTACHING PARTS		
- 62	AN4H7A	• BOLT	24	
	AN960D416L	• WASHER	24	
		¤----¤-¤-¤----¤		
- 63	25-58093- 3	• GASKET, FUEL TANK HANDHOLE COVER	2	
- 64	TF55886	• CAP, EXTERNAL OUTLET (TP)	1	
		ATTACHING PARTS		
- 65	AN6H56A	• BOLT	1	
	AN960D616	• WASHER	1	
- 66	TF30487-1	• GASKET, O RING (TP)	1	
		¤----¤-¤-¤----¤		
- 67	TT70342-10	• GASKET (TP)	1	
- 68	TF54500 *	• PUMP, A-C FUEL BOOSTER (TP) MCDONNELL SPEC 25-58057-1	1	
		ATTACHING PARTS		
- 69	AN4H7A	• BOLT	24	
	AN960D416L	• WASHER	24	
		¤----¤-¤-¤----¤		
- 70	TF28707	• • GASKET, MOUNTING (TP)	1	
	25-58053- 1	• ELBOW ASSEMBLY, A-C BOOSTER PUMP	1	
		ATTACHING PARTS		
- 71	AN5H5A	• BOLT	6	
	AN960D516L	• WASHER	6	
		¤----¤-¤-¤----¤		
- 72	1111-518115	• • VALVE ASSY, SWING CHECK (PA)	1	
		ATTACHING PARTS		
	AN500A6-4	• • SCREW	2	
		¤----¤-¤-¤----¤		
	R208SB10	• • INSERT (ROSN)	1	
	RL38SB9	• • RING, LOCK (ROSN)	1	
- 73	25-58053- 3	• • ELBOW	1	
- 74	25-58076- 59	• GASKET, FUEL SYSTEM	1	
- 75	25-58105- 3	• FLANGE, SWIVEL TYPE ELBOW MOUNTING	1	
		ATTACHING PARTS		
- 76	AN5H7A	• BOLT	4	
	AN960D516L	• WASHER	4	
		¤----¤-¤-¤----¤		
- 77	AN762D20	• ELBOW	1	
- 78	25-58076- 9	• GASKET, FUEL SYSTEM	1	
- 79	1111-526828	• VALVE ASSEMBLY (PA)	1	
- 80	25-58076- 11	• GASKET, FUEL SYSTEM	1	
- 81	25-58055- 3	• MANIFOLD, A-C & NEGATIVE G PUMPS	1	
		ATTACHING PARTS		
- 82	AN5H6A	• BOLT	4	
	AN960D516L	• WASHER	4	
		¤----¤-¤-¤----¤		
- 83	25-58076- 41	• GASKET, FUEL SYSTEM	1	
- 84	25-58103-301	• HOSE ASSEMBLY, FUSELAGE CENTER FUEL TANK A-C PUMP	1	

* MUST BE MODIFIED BY THOMPSON PRODUCTS INC., SERVICE BULLETIN ESD136, PRIOR TO INSTALLATION ON ANY AIRCRAFT.

FIGURE & INDEX NUMBER	PART NUMBER	1 2 3 4 5 6 7 DESCRIPTION	UNITS PER ASS'Y	USABLE ON CODE
120 -		ATTACHING PARTS		
- 85	AN5H6A	• BOLT	2	
	AN960D516L	∘ WASHER	2	
- 86	AN5H6A	∘ BOLT	2	
	201AC5/16	∘ LOCK-O-SEAL (WFRC)	2	
		¤----¤-¤-¤----¤		
- 87	AN756D32	• ∘ FLANGE	2	
- 88	9714-32D	• ∘ NIPPLE (AQ)	2	
	212-32D	∘ ∘ SOCKET (AQ) USE WITH INDEX 88	2	
- 89	25-58103- 5	∘ ∘ HOSE	1	
- 90	25-58076- 41	∘ GASKET, FUEL SYSTEM	1	
- 91	25-58188- 1	• CLIP ASSY, FUEL TANK SUPPORT	10	
		ATTACHING PARTS		
- 92	AN4H6A	∘ BOLT	20	
	AN960D416	∘ WASHER	20	
		¤----¤-¤-¤----¤		
	98477	• • RETAINER (MKL)	1	
	32-1452-048	∘ ∘ NUT, BARREL (EN)	1	
- 93	25-58097- 1	• PLATE ASSEMBLY, CENTER FUEL TANK PUMP MTG AFT	1	
		ATTACHING PARTS		
- 94	AN4H5A	• BOLT	36	
	AN960D416L	• WASHER	36	
		¤----¤-¤-¤----¤		
- 95	GRA4X6-12H32	∘ ∘ FLANGE (NEUS)	1	
		ATTACHING PARTS		
	AN509-10R6	∘ • SCREW	4	
		¤----¤-¤-¤----¤		
- 96	25-58093- 3	∘ • GASKET, FUEL TANK HANDHOLE COVER	1	
- 97	GRA600-16H32	∘ ∘ FLANGE (NEUS)	1	
		ATTACHING PARTS		
	AN509-10R6	• ∘ SCREW	4	
		¤----¤-¤-¤----¤		
- 98	25-58076- 5	• • GASKET, FUEL SYSTEM	1	
- 99	GRA6X10-24H32	• • FLANGE (NEUS)	1	
		ATTACHING PARTS		
	AN509-10R6	• • SCREW	4	
		¤----¤-¤-¤----¤		
-100	25-58107- 3	• ∘ GASKET, FUEL PUMP	1	
-101	25-58101-301	∘ HOSE ASSY, FUS CENTER FUEL TANK D-C PUMP	1	
		ATTACHING PARTS		
-102	AN5H6A	• BOLT	4	
	AN960D516L	∘ WASHER	4	
-103	AN5H10A	∘ BOLT	4	
	AN960D516L	• WASHER	4	
-104	AN5H10A	∘ BOLT	2	
	201AC5/16	∘ LOCK-O-SEAL (WFRC)	2	
		¤----¤-¤-¤----¤		
-105	AN756D40	• • FLANGE	1	
-106	9714-40-32D	• • NIPPLE (AQ)	1	
-107	AN756D32	• • FLANGE	1	
-108	9714-32D	• ∘ NIPPLE (AQ)	1	
	212-32D	∘ ∘ SOCKET (AQ)	2	
-109	25-58101- 5	• • HOSE	1	
-110	25-58076- 43	• GASKET, FUEL SYSTEM	1	
-111	1111-526829	• VALVE ASSY, SWING CHECK (PA)	1	
-112	25-58076- 59	• GASKET, FUEL SYSTEM	1	
-113	25-58052- 3	• MANIFOLD, FUEL BOOSTER PUMPS	1	
		ATTACHING PARTS		
-114	AN4H10A	• BOLT	8	
	AN960D416L	• WASHER	8	
		¤----¤-¤-¤----¤		
-115	25-58076- 27	• GASKET, FUEL SYSTEM	1	
-116	25-58062- 3	• ELBOW, FUEL CELL TO SHUTOFF VALVE	1	A-B
-117	25-58254- 3	• FITTING, FUEL CELL TO SHUTOFF VALVE	1	C-F
-118	TF55886	• CAP, EXTERNAL OUTLET (TP)	1	
		ATTACHING PARTS		
-119	AN6H61A	• BOLT	1	
	AN960D616	• WASHER	1	
-120	TF30487-1	• GASKET, O RING (TP)	1	
		¤----¤-¤-¤----¤		
-121	TT70342-10	• GASKET (TP)	1	
-122	25-58065- 1	∘ ELBOW ASSEMBLY, CENTER TANK ENGINE D-C BOOSTER PUMP	1	
	R208SB10	• • INSERT (ROSN)	1	
	RL38SB9	• • RING, LOCK (ROSN)	1	

FIGURE & INDEX NUMBER	PART NUMBER	1 2 3 4 5 6 7 DESCRIPTION	UNITS PER ASS'Y	USABLE ON CODE
120 -123	25-58076- 41	• GASKET, FUEL SYSTEM	1	
-124	TF56800 *	• PUMP, TYPE B-27 MODIFIED FUEL BOOSTER (TP)	1	
		MCDONNELL SPEC 25-58061-1		
		ATTACHING PARTS		
-125	AN4H10A	• BOLT	24	
	AN960D416L	• WASHER	24	
	5M5-4	• TAB, BONDING (MDA)	1	
		¤----¤-¤-¤----¤		
	TF56890	• • MOTOR (TP)	1	
-126	TF28707	• • GASKET, MOUNTING (TP)	1	
-127	AN815-4D	• UNION	1	
	MS29512-4	• GASKET, USE WITH INDEX 127	1	
-128	1111-526832	• VALVE ASSEMBLY (PA)	2	
		ATTACHING PARTS		
-129	AN4H11A	• BOLT	16	
	AN960D416L	• WASHER	16	
		¤----¤-¤-¤----¤		
-130	25-58098- 1	• PLATE ASSEMBLY, CENTER FUEL TANK PUMP MOUNTING FORWARD	1	
		ATTACHING PARTS		
-131	AN4H5A	• BOLT	40	
	AN960D416L	• WASHER	40	
		¤----¤-¤-¤----¤		
-132	GRA6X10-24H32	• • FLANGE (NEUS)	1	
		ATTACHING PARTS		
	AN509-10R6	• • SCREW	4	
		¤----¤-¤-¤----¤		
-133	25-58107- 3	• • GASKET, FUEL PUMP	1	
-134	GRA4X6-12H32	• • FLANGE (NEUS)	1	
		ATTACHING PARTS		
	AN509-10R6	• • SCREW	4	
		¤----¤-¤-¤----¤		
-135	25-58093- 3	• • GASKET, FUEL TANK HANDHOLE COVER	1	
-136	25-58179- 3	• • FITTING, ELECTRICAL ACCESS	1	
		ATTACHING PARTS		
-137	AN4H5A	• • BOLT	4	
	AN960D416L	• • WASHER	4	
		¤----¤-¤-¤----¤		
-138	25-58076- 45	• • GASKET, FUEL SYSTEM	1	
-139	25-58098- 3	• • PLATE	1	
-140	25-58203- 3	• BRACKET, ELEC WIRING	1	
-141	25-58203- 5	• BRACKET, ELEC WIRING	2	
-142	2F1-6-17109	• TANK, FUSELAGE SELF SEALING CENTER FUEL (GY)	1	
		MCDONNELL SPEC 25-58002-1		
		ATTACHING PARTS		
-143	AN4-22A	• BOLT	10	
	4M36-02034	• WASHER (MDA)	10	
		¤----¤-¤-¤----¤		
	25-58051- 1	• BACKING ASSEMBLY, FUSELAGE CENTER FUEL TANK	1	
-144	25-58051- 3	• • BACKING, FUS CENTER FUEL TANK FWD	1	
-145	25-58051- 11	• • BACKING, FUS CENTER FUEL TANK FWD UPPER, LEFT SIDE	1	
-146	25-58051- 21	• • BACKING, FUS CENTER FUEL TANK AFT UPPER, LEFT SIDE	1	
-147	25-58051- 9	• • BACKING, FUS CENTER FUEL TANK FWD SIDE	1	
-148	25-58051- 7	• • BACKING, FUS CENTER FUEL TANK AFT SIDE	1	
-149	25-58051- 13	• • BACKING, FUS CENTER FUEL TANK FWD UPPER, RIGHT SIDE	1	
-150	25-58051- 19	• • BACKING, FUS CENTER FUEL TANK AFT UPPER, RIGHT SIDE	1	
-151	25-58051- 17	• • BACKING, FUS CENTER FUEL TANK FWD UPPER	1	
-152	25-58051- 15	• • BACKING, FUS CENTER FUEL TANK AFT UPPER	1	
-153	25-58051- 5	• • BACKING, FUS CENTER FUEL TANK AFT	1	

* MUST BE MODIFIED BY THOMPSON PRODUCTS INC., SERVICE BULLETIN ESD136, PRIOR TO INSTALLATION ON ANY AIRCRAFT.

Center Fuselage

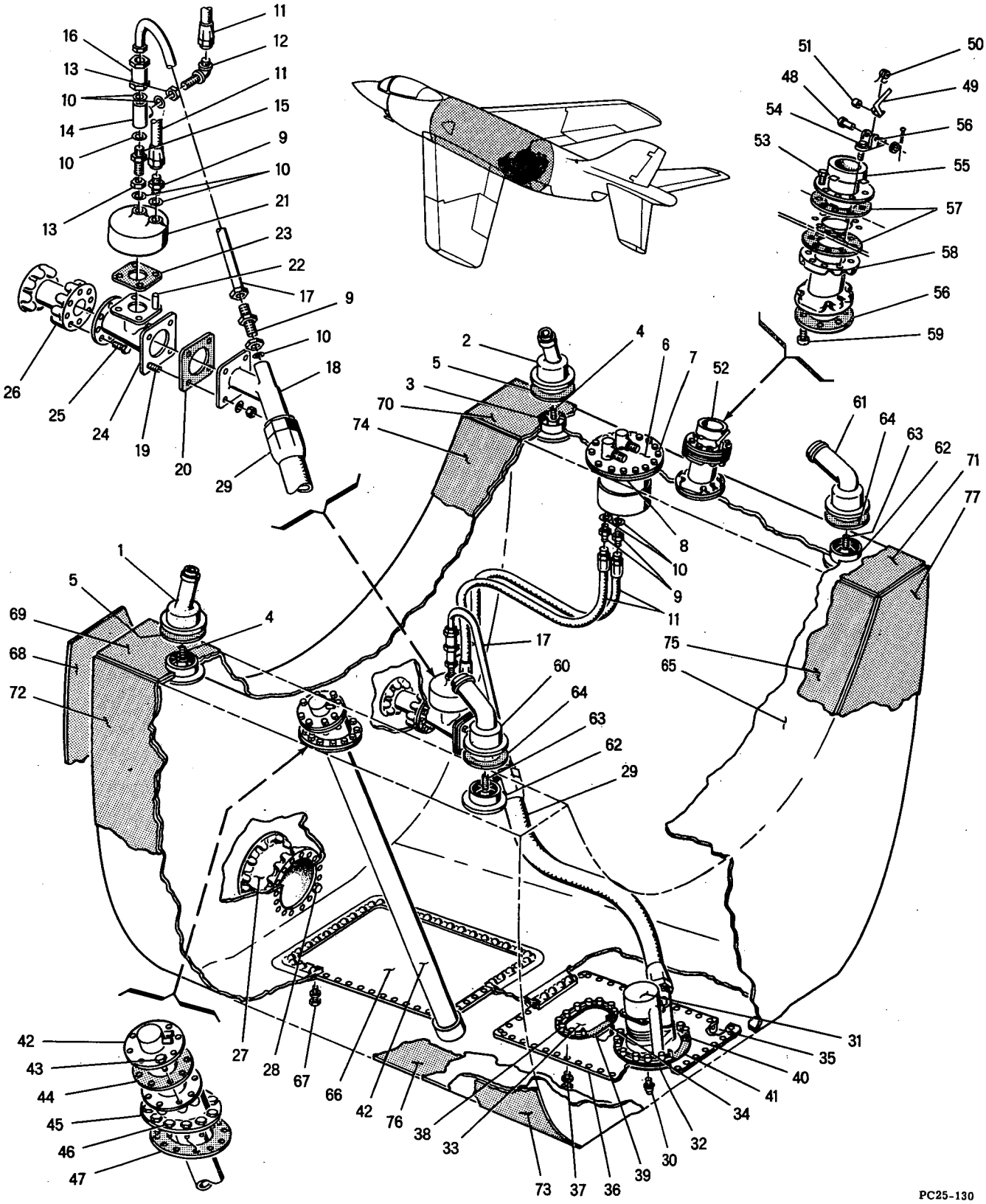

Figure 121 -- Aft Fuel Tank Installation

FIGURE & INDEX NUMBER	PART NUMBER	1 2 3 4 5 6 7 DESCRIPTION	UNITS PER ASS'Y	USABLE ON CODE
121 -	25-58008-301	TANK INSTL, AFT FUEL, SEE FIG. 118-2 FOR NEXT HIGHER ASSY	REF	
- 1	25-58125- 1	• ELBOW ASSY, AFT FUEL TANK CLIMB VENT LH	1	
- 2	25-58125- 2	• ELBOW ASSY, AFT FUEL TANK CLIMB VENT RH	1	
	RL31SB9	• • RING, LOCK (ROSN)	1	
	RD207SB9L	• • INSERT (ROSN)	1	
- 3	25-58128- 5	• SPIDER ASSY, FUEL TANK VENT CONNECTION	2	
		ATTACHING PARTS		
- 4	NAS428H5-24	• BOLT	2	
	AN960D516L	• WASHER	2	
		¤----¤-¤-¤----¤		
- 5	25-58076- 53	• GASKET, FUEL SYSTEM	2	
- 6	1323-518228	• VALVE, TOP MOUNTED SOLENOID PILOT PRESSURE FUELING & DEFUELING (PA) MCDONNELL SPEC 25-58088-11	1	
		ATTACHING PARTS		
- 7	AN4H5A	• BOLT	16	
	AN960D416L	• WASHER	16	
		¤----¤-¤-¤----¤		
- 8	25-58076- 3	• GASKET, FUEL SYSTEM	1	
- 9	AN815-4D	• UNION	4	
- 10	MS29512-4	• GASKET	8	
- 11	MS28741-4-0300	• HOSE ASSY, PRESSURE FUELING & DEFUELING	2	
- 12	AN833-4D	• ELBOW	1	
- 13	AN924-4D	• NUT	2	
- 14	AN938D4	• TEE	1	
- 15	AN832-4D	• UNION	1	
- 16	10-1344-75	• VALVE, CHECK (PA)	1	
- 17	25-58120- 13	• TUBE ASSY, FUEL SYS	1	
- 18	1111-526823	• ELBOW ASSY (PA) PRESSURE FUELING & DEFUELING	1	
		ATTACHING PARTS		
- 19	AN5-7A	• BOLT	4	
	AN960D516L	• WASHER	4	
	AN363-524	• NUT	4	
		¤----¤-¤-¤----¤		
- 20	25-58076- 21	• GASKET, FUEL SYSTEM	1	
- 21	1321-517478	• VALVE, DUAL DIAPHRAGM SHUTOFF PRESS. FUELING & DEFUELING (PA) MCDONNELL SPEC 25-58088-9	1	
		ATTACHING PARTS		
- 22	AN4H5A	• BOLT	4	
	AN960D416L	• WASHER	4	
		¤----¤-¤-¤----¤		
- 23	12-548-33	• GASKET, PRESSURE FUELING & DEFUELING (PA) MCDONNELL SPEC 25-58088-25	1	
- 24	25-58050- 3	• TEE, AFT TANK SHUTOFF VALVE	1	
		ATTACHING PARTS		
- 25	AN4H7A	• BOLT	8	
	AN960D416L	• WASHER	8	
		¤----¤-¤-¤----¤		
- 26	25-58056- 3	• INTERCONNECTOR, CENTER TO AFT TANK FUEL TRANSFER	1	
- 27	25-58060- 3	• INTERCONNECTOR, CENTER TO AFT TANK GRAVITY	1	
		ATTACHING PARTS		
- 28	AN4H6A	• BOLT	16	
	AN960D416	• WASHER	16	
		¤----¤-¤-¤----¤		
- 29	25-58218- 7	• HOSE ASSEMBLY, FUEL TRANSFER	1	
	MS28740-20	• • FITTING, END	2	
- 30	230-20274	• VALVE, DRAIN (WH)	1	
	MS29512-4	• GASKET, USE WITH INDEX 30	1	
- 31	TF55600-3 *	• PUMP, FUEL BOOSTER (TP)	1	
		ATTACHING PARTS		
	AN4H7A	• BOLT	16	
	AN960D416L	• WASHER	16	
		¤----¤-¤-¤----¤		
- 32	TF27607-1	• • GASKET, MOUNTING (TP)	1	
- 33	25-58091- 3	• COVER, FUEL TANK HANDHOLE	1	
		ATTACHING PARTS		
	AN4H7A	• BOLT	12	
	AN960D416L	• WASHER	12	
		¤----¤-¤-¤----¤		

* MUST BE MODIFIED BY THOMPSON PRODUCTS INC., SERVICE BULLETIN ESD136, PRIOR TO INSTALLATION ON ANY AIRCRAFT.

FIGURE & INDEX NUMBER	PART NUMBER	1 2 3 4 5 6 7 DESCRIPTION	UNITS PER ASS'Y	USABLE ON CODE
121 - 34	25-58093- 3	• GASKET, FUEL TANK HANDHOLE	1	
- 35	25-58202- 3	• SUPPORT, ELECTRICAL WIRING	1	
- 36	25-58111- 1	• PLATE ASSY, AFT FUEL TANK COVER	1	
		ATTACHING PARTS		
- 37	AN4H5A	• BOLT	48	
	AN960D416L	• WASHER	48	
		¤----¤-¤-¤----¤		
- 38	GRA4X6-12H32	• • FLANGE (NEUS)	1	
		ATTACHING PARTS		
	AN509-10R6	• • SCREW	4	
		¤----¤-¤-¤----¤		
- 39	25-58093- 3	• • GASKET, FUEL TANK HANDHOLE COVER	1	
- 40	GRA725-16H32	• • FLANGE (NEUS)	1	
		ATTACHING PARTS		
	AN509-10R6	• • SCREW	4	
		¤----¤-¤-¤----¤		
- 41	25-58076- 7	• • GASKET, FUEL SYS	1	
- 42	165-045-582	• UNIT, AFT FUEL TANK QUANTITY GAGE (AVEN) MCDONNELL SPEC 25-58084-7	1	
		ATTACHING PARTS		
- 43	AN4H5A	• BOLT	8	
	AN960D416L	• WASHER	8	
		¤----¤-¤-¤----¤		
- 44	25-58076- 15	• GASKET, FUEL SYSTEM	1	
- 45	25-58059- 3	• SUPPORT, CENTER & AFT TANK FUEL GAGE PROBE	1	
		ATTACHING PARTS		
- 46	AN4H6A	• BOLT	12	
	AN960D416L	• WASHER	12	
		¤----¤-¤-¤----¤		
- 47	25-58076- 37	• GASKET, FUEL SYSTEM	1	
- 48	AN392-29	• PIN, FLAT HEAD	1	
	AN960-4	• WASHER	1	
	AN380-2-1	• PIN, COTTER	1	
- 49	25-58122- 3	• ARM, AFT FUEL TANK FILLER NECK SAFETY	1	
- 50	25-58147- 3	• SPRING, SCUPPER DOOR SAFETY ARM	1	
- 51	NAS42DD4-22	• SPACER	1	
- 52	25-58113- 1	• NECK ASSY, AFT FUEL TANK FILLER	1	
		ATTACHING PARTS		
- 53	AN4H6A	• BOLT	6	
	AN960D416	• WASHER	6	
- 54	AN4H6A	• BOLT	2	
	AN960D416L	• WASHER	2	
		¤----¤-¤-¤----¤		
- 55	NAF1025-2	• • CAP ASSEMBLY	1	
	AN381-2-8	• • PIN, COTTER	1	
	NAF1088-2C6	• • CHAIN	1	
	RS100	• • LINK (RYY)	1	
- 56	25-58146- 3	• BRACKET, SCUPPER DOOR SAFETY ARM	1	
- 57	25-58076- 17	• GASKET, FUEL SYSTEM	3	
- 58	25-58067- 3	• SUPPORT, AFT FUEL TANK FILLER NECK	1	
		ATTACHING PARTS		
- 59	AN4H7A	• BOLT	8	
	AN960D416	• WASHER	8	
		¤----¤-¤-¤----¤		
- 60	25-58124- 1	• ELBOW ASSY, AFT FUEL TANK DIVE VENT LH	1	
- 61	25-58124- 2	• ELBOW ASSY, AFT FUEL TANK DIVE VENT RH	1	
	RL31SB9	• • RING, LOCK (ROSN)	1	
	RD207SB9L	• • INSERT (ROSN)	1	
- 62	1111-526825	• SPIDER ASSY (PA) AFT TANK FUEL DIVE VENT	2	
		ATTACHING PARTS		
- 63	NAS428H5-24	• BOLT	2	
	AN960D516L	• WASHER	2	
		¤----¤-¤-¤----¤		
- 64	25-58076- 53	• GASKET, FUEL SYSTEM	2	
- 65	2F1-6-17112	• TANK, FUSELAGE SELF SEALING AFT FUEL (GY) MCDONNELL SPEC 25-58003-1	1	
- 66	AN4132-1	• COVER, HANDHOLE, FURNISHED WITH 2F1-6-17112	1	
		ATTACHING PARTS		
- 67	AN4H5A	• BOLT	48	
	AN960D416L	• WASHER	48	
		¤----¤-¤-¤----¤		
	25-58066- 1	• BACKING ASSY, FUSELAGE AFT FUEL TANK	1	

FIGURE & INDEX NUMBER	PART NUMBER	1 2 3 4 5 6 7 DESCRIPTION	UNITS PER ASS'Y	USABLE ON CODE
121- 68	25-58066- 3	• • BACKING, FUSELAGE AFT FUEL TANK FORWARD	1	
- 69	25-58066- 11	• • BACKING, FUS AFT FUEL TANK LEFT SIDE UPPER	1	
- 70	25-58066- 13	• • BACKING, FUS AFT FUEL TANK RIGHT SIDE UPPER	1	
- 71	25-58066- 15	• • BACKING, FUS AFT FUEL TANK RIGHT SIDE UPPER	1	
- 72	25-58066- 7	• • BACKING, FUSELAGE AFT FUEL TANK FWD SIDE LH	1	
	25-58066- 8	• • BACKING, FUSELAGE AFT FUEL TANK FWD SIDE RH	1	
- 73	25-58066- 9	• • BACKING, FUSELAGE AFT FUEL TANK AFT SIDE LH	1	
	25-58066- 10	• • BACKING, FUSELAGE AFT FUEL TANK AFT SIDE RH	1	
- 74	25-58066- 19	• • BACKING, FUSELAGE AFT FUEL TANK FWD UPPER	1	
- 75	25-58066- 17	• • BACKING, FUSELAGE AFT FUEL TANK AFT UPPER	1	
- 76	25-58066- 21	• • BACKING, FUSELAGE AFT FUEL TANK LOWER	2	
- 77	25-58066- 5	• • BACKING, FUSELAGE AFT FUEL TANK AFT	1	

Center Fuselage

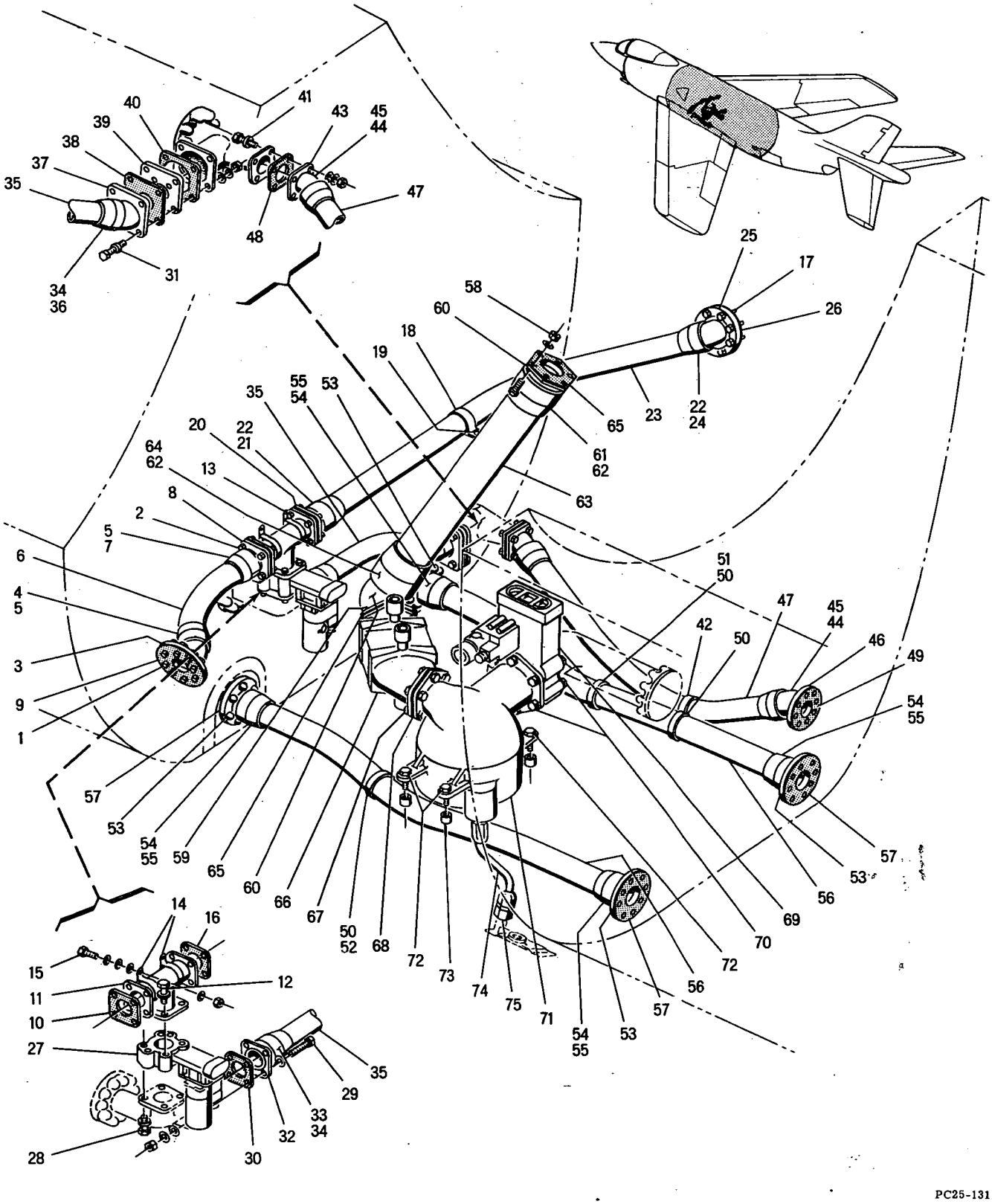

PC25-131

Figure 122 - Engine Accessory Compartment Fuel System Installation

FIGURE & INDEX NUMBER	PART NUMBER	1 2 3 4 5 6 7 DESCRIPTION	UNITS PER ASS'Y	USABLE ON CODE
122 -	25-58010-301	SYSTEM INSTALLATION, ENGINE ACCESSORY COMPARTMENT FUEL, SEE FIG. 118-1 FOR NEXT HIGHER ASSY	REF	A-B
	25-58017- 3	SYSTEM INSTALLATION, ENGINE ACCESSORY COMPARTMENT FUEL, SEE FIG. 118-1 FOR NEXT HIGHER ASSY	REF	C
	25-58017- 1	SYSTEM INSTALLATION, ENGINE ACCESSORY COMPARTMENT FUEL, SEE FIG. 118-1 FOR NEXT HIGHER ASSY	REF	D-F
	25-58132-301	. HOSE ASSY, WING FUEL TRANSFER	1	
		ATTACHING PARTS		
- 1	AN4H11A	. BOLT	8	
	AN960D416	. WASHER	8	
- 2	AN4-10A	. BOLT	4	
	AN960D416	. WASHER	8	
	AN364-428	. NUT	4	
		¤----¤-¤-¤----¤		
- 3	926622-24	. . FLANGE (AQ)	1	
- 4	9745-24D	. . NIPPLE (AQ)	1	
- 5	212-24D	. . SOCKET (AQ)	2	
- 6	25-58132- 9	. . HOSE, WING FUEL TRANSFER	1	
- 7	9714-24D	. . NIPPLE (AQ)	1	
- 8	AN756D24	. . FLANGE	1	
- 9	25-58076- 29	. GASKET, FUEL SYSTEM	1	
- 10	25-58076- 23	. GASKET, FUEL SYSTEM	1	
- 11	25-58089- 3	. TEE, WING FUEL TRANSFER	1	
		ATTACHING PARTS		
- 12	AN4H5A	. BOLT	4	
	AN960D416	. WASHER	4	
- 13	AN4-10A	. BOLT	4	
	AN960D416	. WASHER	8	
	AN364-428	. NUT	4	
- 14	AN742-28C	. CLAMP	2	
- 15	AN3-6A	. BOLT	2	
	AN960D10L	. WASHER	2	
	AN960D10	. WASHER	6	
	AN364-1032	. NUT	2	
		¤----¤-¤-¤----¤		
- 16	25-58076- 23	. GASKET, FUEL SYSTEM	1	
	25-58132-303	. HOSE ASSY, WING FUEL TRANSFER	1	
		ATTACHING PARTS		
- 17	AN4H11A	. BOLT	8	
	AN960D416	. WASHER	8	
- 18	AN742-30C	. CLAMP	1	
- 19	AN3-6A	. BOLT	1	
	AN960D10L	. WASHER	1	
	AN960D10	. WASHER	2	
	AN364-1032	. NUT	1	
		¤----¤-¤-¤----¤		
- 20	AN756D24	. . FLANGE	1	
- 21	9714-24D	. . NIPPLE (AQ)	1	
- 22	212-24D	. . SOCKET (AQ)	2	
- 23	25-58132- 11	. . HOSE, WING FUEL TRANSFER	1	
- 24	9745-24D	. . NIPPLE (AQ)	1	
- 25	926622-24	. . FLANGE (AQ)	1	
- 26	25-58076- 29	. GASKET, FUEL SYSTEM	1	
- 27	AV16B1160B	. VALVE, WING FUEL SYSTEM SHUTOFF (GCO) MCDONNELL SPEC 25-58085-3, ALTERNATE AV16B1160A (GCO) MCDONNELL SPEC 25-58085-1	1	
		ATTACHING PARTS		
- 28	AN4H5A	. BOLT	4	
	AN960D416	. WASHER	4	
- 29	AN4-10A	. BOLT	4	
	AN960D416	. WASHER	8	
	AN364-428	. NUT	4	
		¤----¤-¤-¤----¤		
- 30	25-58076- 23	. GASKET, FUEL SYSTEM	1	
	25-58133-301	. HOSE ASSY, PRESSURE FUELING TRANSFER	1	
		ATTACHING PARTS		
- 31	AN5-13A	. BOLT	4	
	AN960D516	. WASHER	12	
	AN364-524	. NUT	4	
		¤----¤-¤-¤----¤		
- 32	AN756D24	. . FLANGE	1	

FIGURE & INDEX NUMBER	PART NUMBER	1 2 3 4 5 6 7 DESCRIPTION	UNITS PER ASS'Y	USABLE ON CODE
122 - 33	9714-24D	• • NIPPLE (AQ)	1	
- 34	212-24D	• • SOCKET (AQ)	2	
- 35	25-58133- 5	• • HOSE, PRESSURE FUELING TRANSFER	1	
- 36	9745-24D	• • NIPPLE (AQ)	1	
- 37	900390-24	• • FLANGE (AQ)	1	
- 38	25-58175- 3	• GASKET, FUEL SYSTEM	1	
- 39	1111-526833	• VALVE ASSY (PA) PRESSURE FUELING TRANSFER	1	
- 40	25-58175- 5	• GASKET, FUEL SYSTEM	1	
	25-58138-301	• HOSE ASSY, FUEL PUMP TRANSFER	1	
		ATTACHING PARTS		
- 41	AN4-11A	• BOLT	4	
	AN960D416	• WASHER	12	
	AN364-428	• NUT	4	
- 42	AN742-30C	• CLAMP	1	
	AN3-10A	• BOLT, USE WITH INDEX 42	1	
	AN960D10	• WASHER, USE WITH INDEX 42	2	
	AN364-1032	• NUT, USE WITH INDEX 42	1	
		¤----¤-¤-¤----¤		
- 43	AN756D24	• • FLANGE	1	
- 44	9745-24D	• • NIPPLE (AQ)	2	
- 45	212-24D	• • SOCKET (AQ)	2	
- 46	25-58131- 3	• • FLANGE, HOSE SWIVEL	1	
- 47	25-58138- 5	• • HOSE, FUEL PUMP TRANSFER	1	
- 48	25-58076- 23	• GASKET, FUEL SYSTEM	1	
- 49	25-58076- 29	• GASKET, FUEL SYSTEM	1	
	25-58139-301	• HOSE ASSY, GRAVITY FUEL TRANSFER	2	
		ATTACHING PARTS		
- 50	AN742-38C	• CLAMP	3	
- 51	AN3-12A	• BOLT	1	
	AN960D10	• WASHER	2	
	25-58174- 5	• SPACER, FUEL SYSTEM	1	
	AN364-1032	• NUT	1	
- 52	AN3-10A	• BOLT	1	
	AN960D10	• WASHER	2	
	AN364-1032	• NUT	1	
		¤----¤-¤-¤----¤		
- 53	25-58129- 3	• • FLANGE, HOSE SWIVEL	2	
- 54	9714-32D	• • NIPPLE (AQ)	2	
- 55	212-32D	• • SOCKET (AQ)	2	
- 56	25-58139- 5	• • HOSE, GRAVITY FUEL TRANSFER	1	
- 57	25-58076- 33	• GASKET, FUEL SYSTEM	4	
	25-58134-301	• HOSE ASSY, ENGINE FUEL	1	
		ATTACHING PARTS		
- 58	AN5-11A	• BOLT	6	
	AN960D516	• WASHER	18	
	AN364-524	• NUT	6	
- 59	AN5H7A	• BOLT	6	
	AN960D516	• WASHER	12	
		¤----¤-¤-¤----¤		
- 60	AN756D40	• • FLANGE	2	
- 61	9714-40D	• • NIPPLE (AQ)	1	
- 62	212-40D	• • SOCKET (AQ)	2	
- 63	25-58134- 5	• • HOSE, ENGINE FUEL	1	
- 64	9790-40D	• • NIPPLE (AQ)	1	
- 65	25-58076- 59	• GASKET, FUEL SYSTEM	2	
- 66	0-901-4634	• RADIATOR, HYDRAULIC FLUID (TRA) MCDONNELL SPEC 25-69051-1	1	
		ATTACHING PARTS		
- 67	AN5H5A	• BOLT	6	
	AN960D516	• WASHER	12	
		¤----¤-¤-¤----¤		
- 68	25-58076- 59	• GASKET, FUEL SYSTEM	1	
- 69	AV16B1139B	• VALVE, MOTOR OPERATED FUEL SHUTOFF (GCO) MCDONNELL SPEC 25-58083-1	1	
		ATTACHING PARTS		
- 70	AN5H5A	• BOLT	12	
	AN960D516	• WASHER	24	
		¤----¤-¤-¤----¤		
- 71	50-1294-000	• STRAINER, FUEL SYSTEM (AS) MCDONNELL SPEC 25-58082-1	1	

FIGURE & INDEX NUMBER	PART NUMBER	1 2 3 4 5 6 7 DESCRIPTION	UNITS PER ASS'Y	USABLE ON CODE
122 -		ATTACHING PARTS		
- 72	AN4-11A	• BOLT	3	
	AN960D416	• WASHER	6	
- 73	25-58174- 3	• SPACER, FUEL SYSTEM	3	
	AN364-428	• NUT	3	
		□----□-□-□----□		
- 74	MS28741-4-0134	• HOSE ASSY, GEAR BOX VENT DRAIN	1	
- 75	AN815-4D	• UNION	1	

Center Fuselage

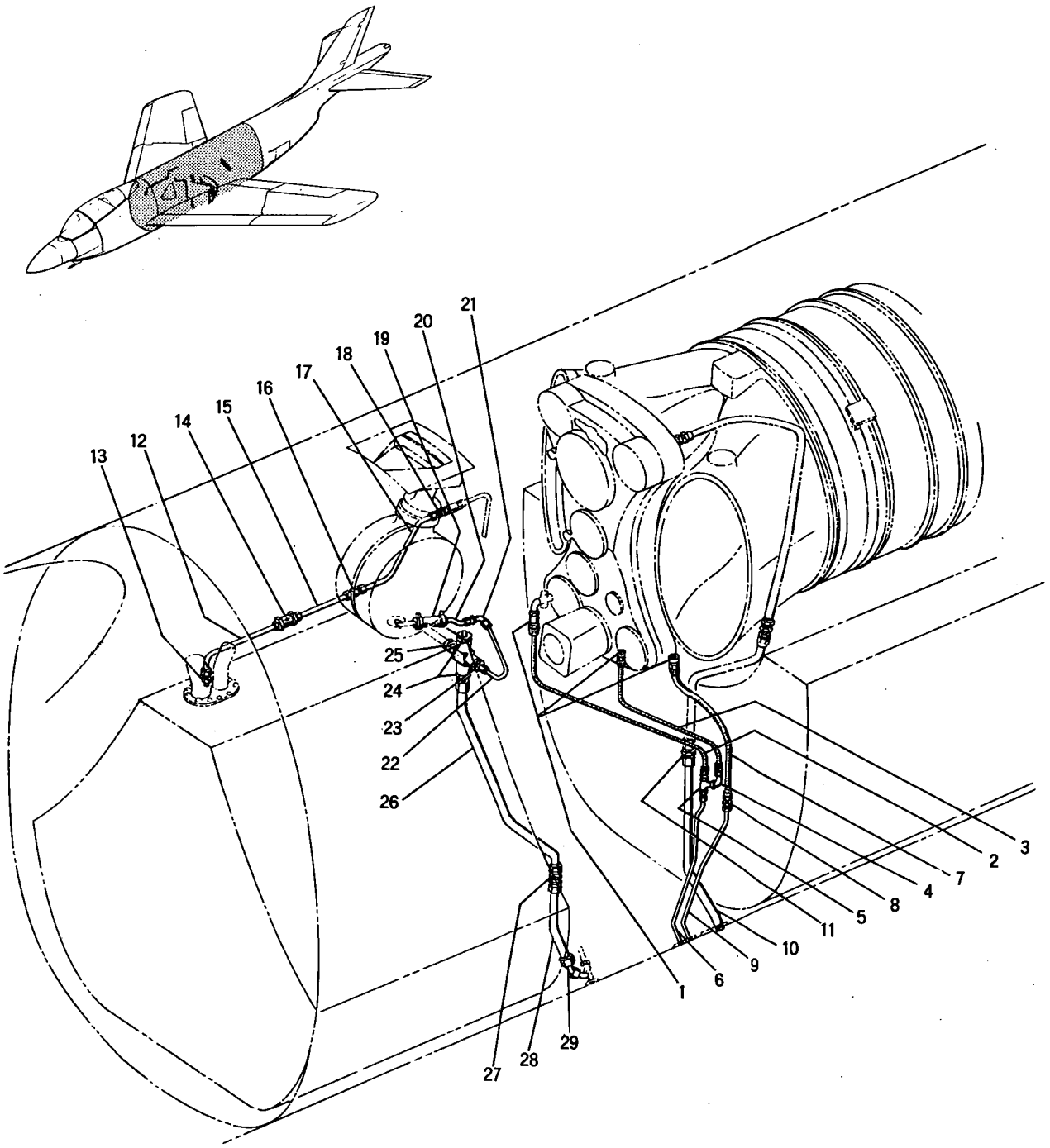

Figure 123 -- Engine Drains Installation

FIGURE & INDEX NUMBER	PART NUMBER	1 2 3 4 5 6 7 DESCRIPTION	UNITS PER ASS'Y	USABLE ON CODE
123 -	25-58014-301	DRAINS INSTL, ENGINE, SEE FIG. 106-44 HIGHER ASSEMBLY	REF	A-B
	25-58014-303	DRAINS INSTL, ENGINE, SEE FIG. 106-44 HIGHER ASSEMBLY	REF	C
- 1	1001-4	• COUPLING (RYY)	3	
- 2	MS28741-4-0440	• HOSE ASSY, ENGINE FUEL PUMP DRAIN	1	
- 3	MS28741-4-0280	• HOSE ASSY, OVERSPEED RELAY & AFTERBURNER FUEL PUMP DRAIN	1	
- 4	AN833-4D	• ELBOW	1	
	MS29512-4	• GASKET, USE WITH INDEX 4	1	
	AN960D716	• WASHER, USE WITH INDEX 4	1	
	AN924-4D	• NUT, USE WITH INDEX 4	1	
- 5	AN783D4	• TEE	1	
	AN960D716	• WASHER, USE WITH INDEX 5	1	
	AN924-4D	• NUT, USE WITH INDEX 5	1	
- 6	25-58211- 9	• TUBE ASSY, OVERSPEED RELAY & AFTERBURNER FUEL PUMP DRAIN	1	
- 7	MS28741-4-0230	• HOSE ASSY, HYDRAULIC PUMPS & OIL SCUPPER DRAIN	1	
- 8	AN832-4D	• UNION	1	
	AN924-4D	• NUT, USE WITH INDEX 8	1	
	AN960D716	• WASHER, USE WITH INDEX 8	2	
- 9	25-58211- 7	• TUBE ASSY, HYDRAULIC PUMPS & OIL SCUPPER DRAIN	1	
- 10	25-58211- 23	• TUBE ASSY, GEAR BOX VENT DRAIN	1	
- 11	AN815-16D	• UNION	1	
- 12	25-58211- 15	• TUBE ASSY, ENGINE BOOST PUMP BLEED	1	
- 13	AN815-4D	• UNION	1	
	MS29512-4	• GASKET, USE WITH INDEX 13	1	
- 14	10-1344-75	• VALVE, CHECK (PA)	1	
- 15	25-58211- 13	• TUBE ASSY, ENGINE BOOST PUMP BLEED	1	
- 16	AN815-4D	• UNION	1	
- 17	25-58211- 11	• TUBE ASSY, ENGINE BOOST PUMP BLEED	1	
- 18	1002-4	• NIPPLE (RYY)	1	
	AN924-4D	• NUT, USE WITH INDEX 18	1	
	AN960D716	• WASHER, USE WITH INDEX 18	2	
- 19	25-58211- 19	• HOSE ASSY, PLENUM CHAMBER DRAIN	1	
- 20	25-58211- 25	• TUBE ASSY, PLENUM CHAMBER DRAIN	1	
- 21	AN837-4D	• ELBOW	1	
	AN924-4D	• NUT, USE WITH INDEX 21	1	
	AN960D716	• WASHER, USE WITH INDEX 21	2	
- 22	25-58211- 43	• TUBE ASSEMBLY, PLENUM CHAMBER DRAIN	1	
- 23	AN919-10D	• REDUCER	1	
	AN6290-8	• GASKET, USE WITH INDEX 23	1	
- 24	AN815-8D	• UNION	2	
	AN6290-8	• GASKET, USE WITH INDEX 24	2	
- 25	AN937D8	• CROSS	1	
- 26	25-58211- 39	• TUBE ASSEMBLY, PLENUM CHAMBER DRAIN	1	
- 27	AN832-8D	• UNION	1	
	AN924-8D	• NUT, USE WITH INDEX 27	1	
	AN960D1216	• WASHER, USE WITH INDEX 27	2	
- 28	25-58211- 41	• TUBE ASSEMBLY, PLENUM CHAMBER DRAIN	1	
- 29	AN837-8D	• ELBOW	1	

Center Fuselage

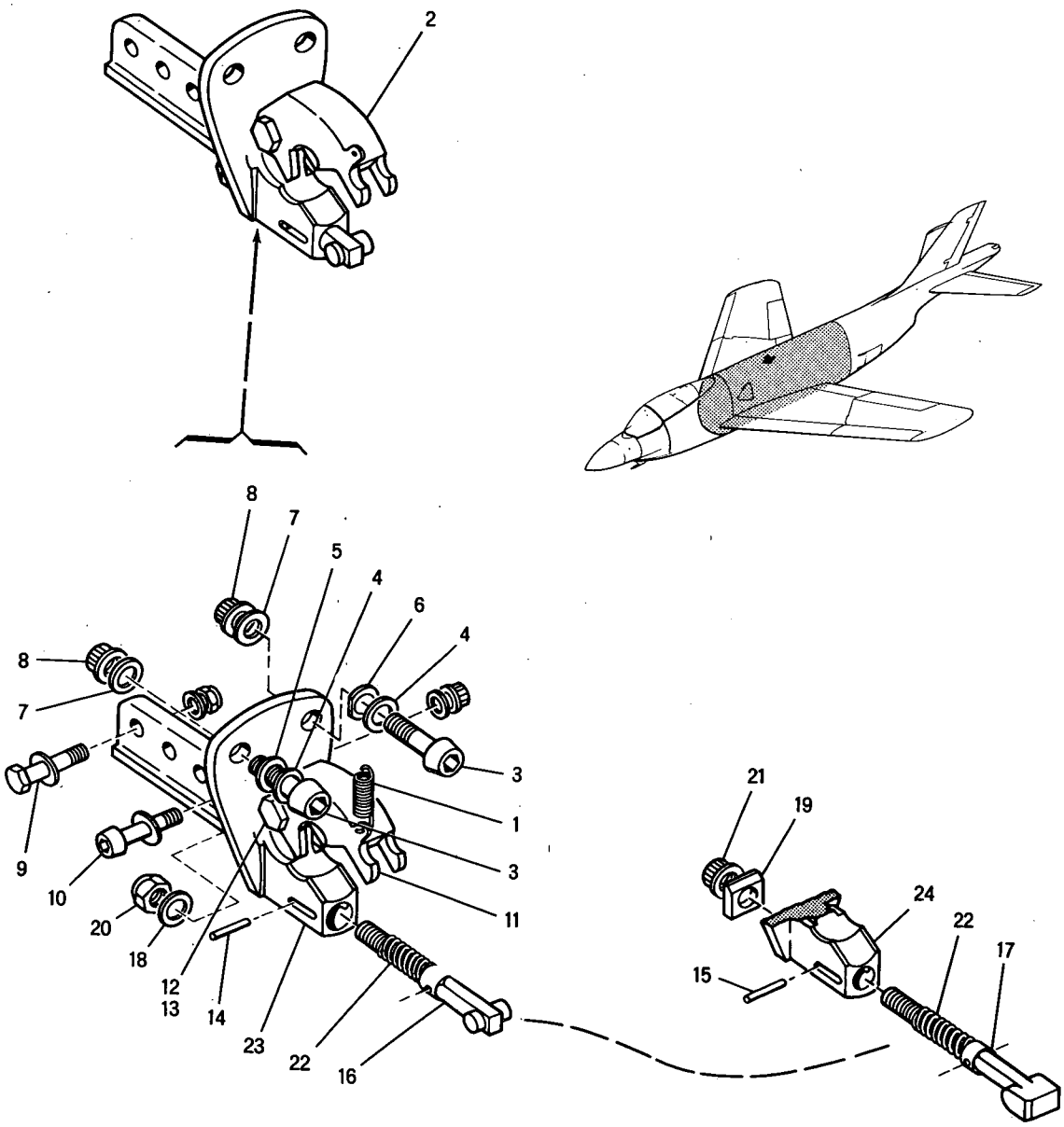

PC25-140

Figure 124 - Engine Forward Mount Installation

FIGURE & INDEX NUMBER	PART NUMBER	1 2 3 4 5 6 7 DESCRIPTION	UNITS PER ASS'Y	USABLE ON CODE
124 -	25-50001- 3	MOUNT INSTL, ENGINE FORWARD, SEE FIG. 1 FOR NEXT HIGHER ASSEMBLY	1	A-B
	25-50001-303	MOUNT INSTL, ENGINE FORWARD, SEE FIG. 1 FOR NEXT HIGHER ASSEMBLY	1	C-F
- 1	25-50061- 3	• SPRING, ENGINE FORWARD MOUNT CLAMP EXTENSION	1	
- 2	25-50002- 1	• MOUNT ASSEMBLY, ENGINE FORWARD, FOR FUTURE PROCUREMENT USE 25-50009-1	1	A-B
	25-50009- 1	• MOUNT ASSEMBLY, ENGINE FORWARD, USE FOR FUTURE PROCUREMENT TO REPLACE 25-50002-1	1	
		ATTACHING PARTS		
- 3	NAS149-29	• BOLT	2	
- 4	NAS143-9C	• WASHER	2	
- 5	AN960D916	• WASHER, LEFT SIDE	1	
- 6	25-32197- 3	• WASHER, ENGINE FWD MOUNT, RIGHT SIDE, ALTERED FROM GOVERNMENT STANDARD PART NUMBER AN960D916	1	
- 7	NAS143-9	• WASHER	2	
- 8	EB098	• NUT (EN)	2	
- 9	NAS464-6A22	• BOLT	3	
	AN960D616	• WASHER	6	
	AN364-624	• NUT	3	
- 10	NAS147-36	• BOLT	1	
	NAS143-7C	• WASHER	1	
	AN960D716	• WASHER	1	
	EB070	• NUT (EN)	1	
		¤----¤-¤-¤----¤		
- 11	25-50059- 3	• • CLAMP, ENGINE FORWARD MOUNT	1	
		ATTACHING PARTS		
- 12	AN8-16	• • BOLT	1	25-50002-1
	AN960-816	• • WASHER	2	25-50002-1
	AN310-8	• • NUT	1	
	AN380-3-5	• • PIN, COTTER	1	
- 13	NAS464F8-18	• • BOLT	1	25-50009-1
	AN960-816	• • WASHER	3	25-50009-1
	AN310-8	• • NUT	1	
	AN380-3-5	• • PIN, COTTER	1	
		¤----¤-¤-¤----¤		
- 14	9M26-8-0100	• • PIN (MDA)	1	25-50002-1
- 15	79-028-125-1000	• • PIN, ROLL (EN)	1	25-50009-1
- 16	25-50060- 3	• • BOLT, ENGINE FORWARD MOUNT TEE, FOR FUTURE PROCUREMENT USE 25-50113-3	1	25-50002-1
- 17	25-50113- 3	• • BOLT, ENGINE FORWARD MOUNT TEE, USE FOR FUTURE PROCUREMENT TO REPLACE 25-50060-3	1	
- 18	AN960-816	• • WASHER	1	25-50002-1
- 19	25-50115- 3	• • WASHER, ENGINE FORWARD MOUNT	1	25-50009-1
- 20	AN365-820	• • NUT	1	25-50002-1
- 21	EB080	• • NUT (EN)	1	25-50009-1
- 22	19-51017- 3	• • SPRING, TEE BOLT RETRACTING COMPRESSION	1	
- 23	25-50058- 5	• • BODY, ENGINE FORWARD MOUNT	1	25-50002-1
- 24	25-50114- 3	• • BODY, ENGINE FORWARD MOUNT	1	25-50009-1

Center Fuselage

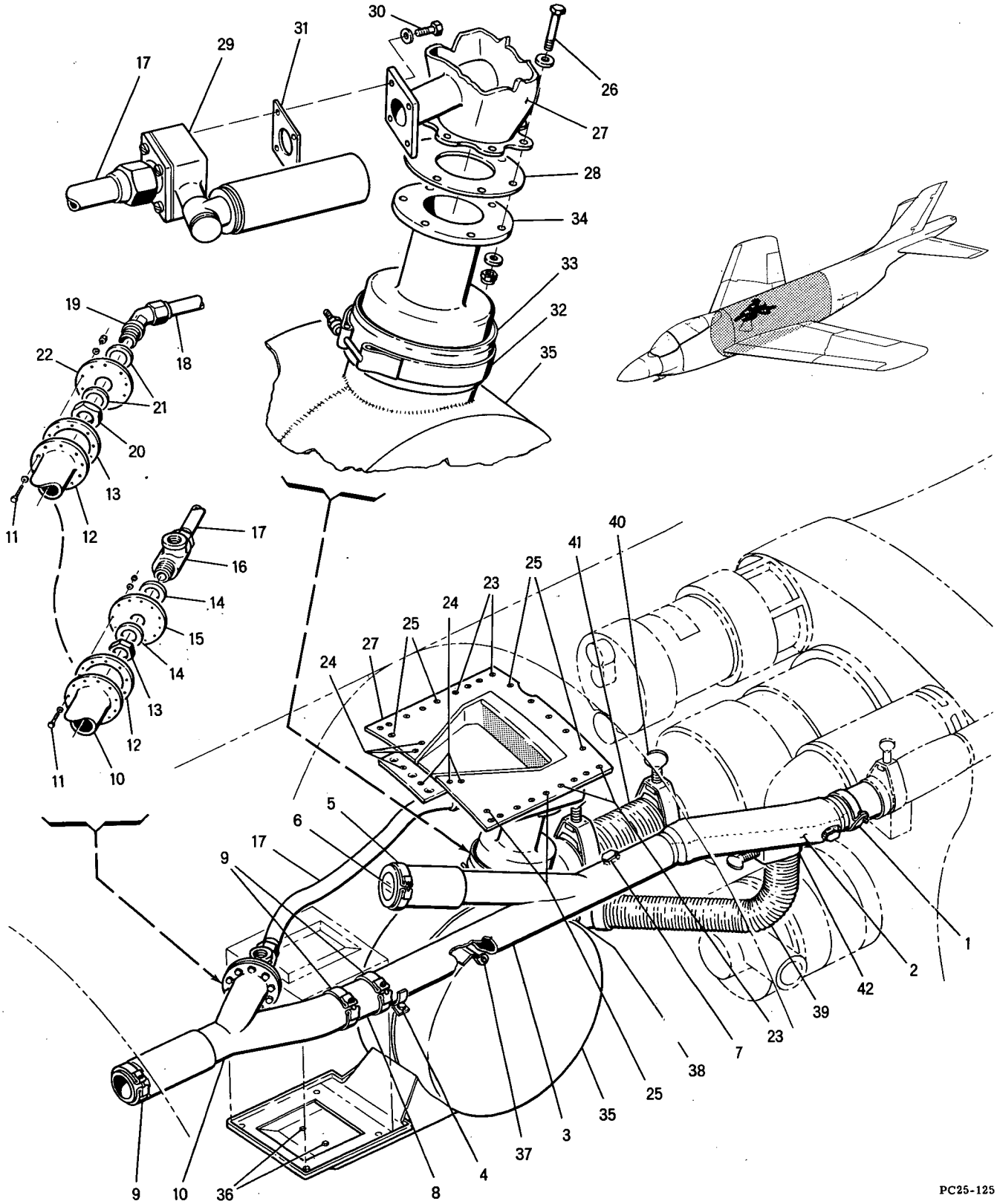

Figure 125 -- Accessory Cooling Installation

FIGURE & INDEX NUMBER	PART NUMBER	1 2 3 4 5 6 7 DESCRIPTION	UNITS PER ASS'Y	USABLE ON CODE
125 -	25-56000- 1	COOLING INSTL, ACCESSORY, SEE FIG. 106-21 FOR NEXT HIGHER ASSEMBLY	REF	A-B
	25-56000-303	COOLING INSTL, ACCESSORY, SEE FIG. 106-21 FOR NEXT HIGHER ASSEMBLY	REF	C
	25-56000-301	COOLING INSTL, ACCESSORY, SEE FIG. 106-21 FOR NEXT HIGHER ASSEMBLY	REF	D-F
- 1	AN742C42	. CLAMP	1	
- 2	25-56000- 3	. BLANKET, ALTERED FROM B506 (SEPD)	1	A-C
- 3	101029	. DUCT ASSEMBLY (FAKB)	1	A-C
		ATTACHING PARTS		
- 4	AN3-5A	. BOLT	2	
	AN960D10L	. WASHER	2	
	25-56059- 3	. PAD, ASBESTOS INSULATING	1	
		¤----¤-¤-¤----¤		
- 5	42990-2.686M4	. CLAMP (MAR)	1	A-C
	920AL900-33	. GASKET (JM) USE WITH INDEX 5	1	A-C
- 6	25-56056- 3	. FLANGE, QUICK DISCONNECT BLIND	1	A-C
- 7	AN814-6D	. PLUG	1	A-B
	AN901-6A	. GASKET, USE WITH INDEX 7	1	A-B
- 8	25-56054- 3	. SPACER, SHUTOFF VALVE	1	A-C
- 9	42990-3.187M4	. CLAMP (MAR)	3	A-C
	920AL900-40	. GASKET (JM) USE WITH INDEX 9	3	A-C
- 10	101028	. DUCT ASSEMBLY (FAKB)	1	A-C
		ATTACHING PARTS		
- 11	AN3-5A	. BOLT	10	
	AN960D10L	. WASHER	10	
	AN960D10	. WASHER	10	
	AN365-1032	. NUT	10	
		¤----¤-¤-¤----¤		
- 12	25-56063- 3	. GASKET, FLANGE	1	A-C
	25-56055- 1	. FLANGE ASSEMBLY, CHECK VALVE	1	A-B
- 13	25-56055- 7	. . NUT, ALTERED FROM GOVERNMENT STANDARD PART NO. AN924-16D	1	A-B
- 14	AN901-16A	. . GASKET	2	A-B
- 15	25-56055- 3	. . PLATE	1	A-B
- 16	25-56055- 5	. . TEE, ALTERED FROM GOVERNMENT STANDARD PART NO. AN783D16	1	A-B
- 17	25-56060- 3	. TUBE ASSEMBLY, COOLING SYSTEM	1	A-B
- 18	25-56060- 7	. TUBE ASSY, COOLING SYSTEM	1	C
	25-56076- 1	. ELBOW ASSEMBLY, CHECK VALVE	1	C
- 19	25-56076- 5	. . ELBOW, ALTERED FROM GOVT STANDARD PART NO. AN837-16D	1	
- 20	AN924-16D	. . NUT	1	
- 21	AN901-16A	. . GASKET	1	
- 22	25-56076- 3	. . PLATE	1	
	25-56053- 1	. DUCT ASSEMBLY, ENGINE ACCESSORY COOLING	1	
		ATTACHING PARTS		
- 23	AN509-416R13	. SCREW	8	
- 24	AN509-10R10	. SCREW	6	
- 25	AN509-10R8	. SCREW	17	
- 26	AN3-6A	. BOLT	8	
	AN960D10	. WASHER	16	
	AN364-1032	. NUT	8	
		¤----¤-¤-¤----¤		
- 27	25-56052- 5	. . DUCT ASSEMBLY, ENGINE ACCESSORY COOLING AIR	1	
- 28	25-56064- 3	. GASKET, PLENUM CHAMBER AIR INLET	1	
- 29	PAC2393-1	. VALVE, ELECTRIC SHUTOFF (PC) MCDONNELL SPEC 25-83021-3	1	
		ATTACHING PARTS		
- 30	AN3H5A	. BOLT	4	
	AN960D10L	. WASHER	4	
		¤----¤-¤-¤----¤		
- 31	25-56062- 3	. GASKET, VALVE	1	
- 32	42535-5.250S	. CLAMP (MAR)	1	
- 33	15329-5.250	. SLEEVE (MAR)	1	
- 34	25-56061- 1	. INLET ASSEMBLY, PLENUM CHAMBER WELDED	1	
- 35	25-56005- 1	. CHAMBER ASSY, PLENUM	1	
		ATTACHING PARTS		
- 36	AN4-5A	. BOLT, LOWER	4	
	AN960D416	. WASHER	8	
- 37	AN4-5A	. BOLT	1	
	AN960D416	. WASHER	1	
	AN960D416L	. WASHER	1	
- 38	AN4-5A	. BOLT	1	
	AN960D416L	. WASHER	1	
	AN960D416	. WASHER	1	
	AN365-428	. NUT	1	
		¤----¤-¤-¤----¤		

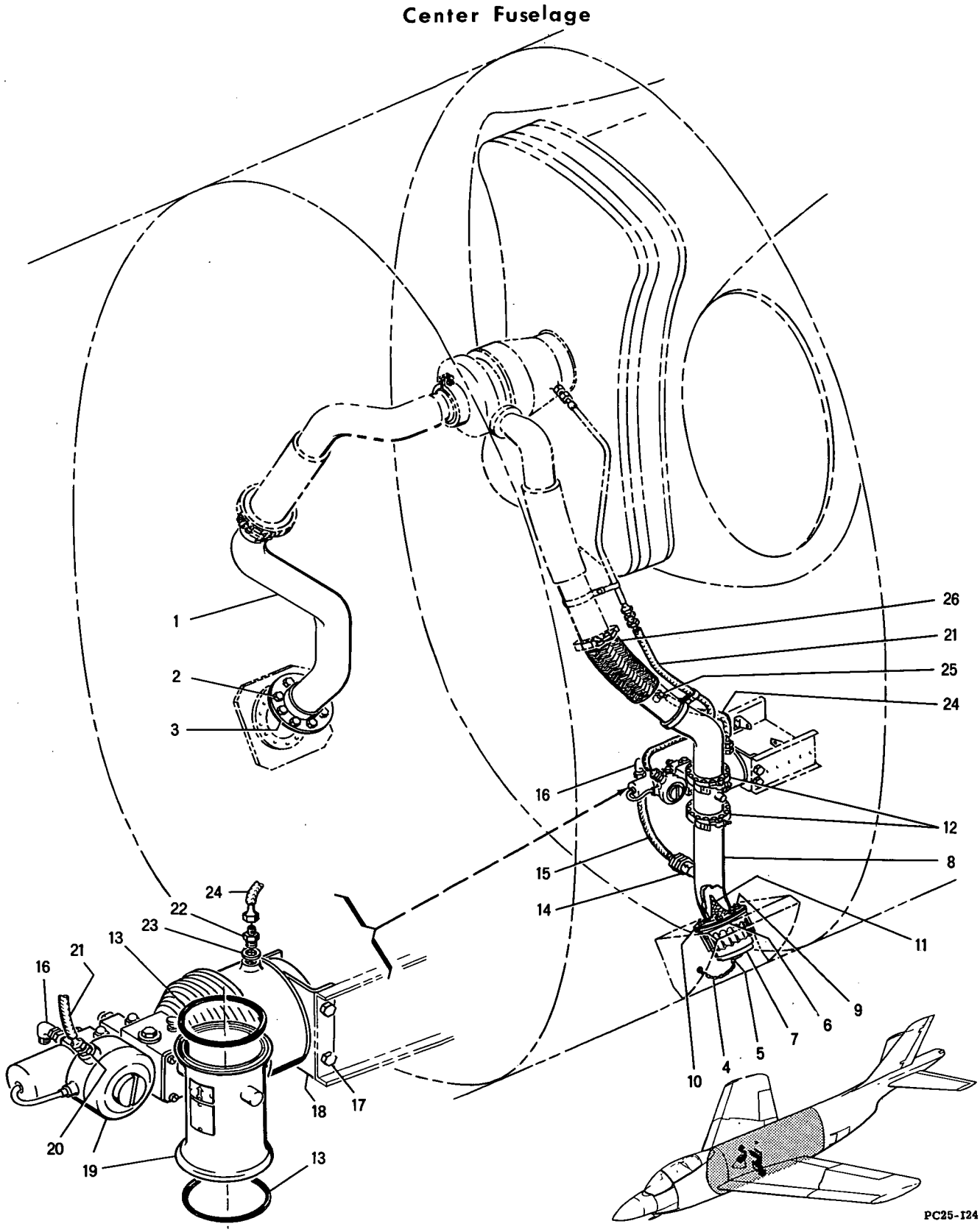

Figure 126 -- Engine Starter Air Duct Installation

FIGURE & INDEX NUMBER	PART NUMBER	1 2 3 4 5 6 7 DESCRIPTION	UNITS PER ASS'Y	USABLE ON CODE
125 - 39	25-56057- 3	• HOSE, D-C GEN FLEXIBLE	1	
- 40	AN737-107	• CLAMP	2	
- 41	25-56058- 3	• HOSE, A-C GEN FLEXIBLE	1	
- 42	AN737-74	• CLAMP	2	
126 -	25-52000- 1	DUCT INSTALLATION, ENGINE STARTER AIR, SEE FIG. 106-22 FOR NEXT HIGHER ASSEMBLY	REF	A-C
	25-52001- 1	DUCT INSTALLATION, ENGINE STARTER AIR, SEE FIG. 106-22 FOR NEXT HIGHER ASSEMBLY	REF	D-F
- 1	101023	• TUBE (FAKB)	1	A-C
		ATTACHING PARTS		
- 2	AN3C4A	• BOLT	8	
		¤----¤-¤-¤----¤		
- 3	25-52059- 3	• GASKET, STARTER AIR EXHAUST	1	
- 4	NAF1088-1A6	• CHAIN	1	
- 5	RS100	• HOOK (RYY)	1	
- 6	8127C	• NIPPLE (RYY)	1	
- 7	9032-48	• CAP (RYY)	1	
- 8	101026	• TUBE (FAKB)	1	A-C
		ATTACHING PARTS		
- 9	AN5-10	• BOLT	6	A-C
	AN960-516	• WASHER	12	
	AN310-5	• NUT	6	A-C
		¤----¤-¤-¤----¤		
- 10	25-52058- 3	• GASKET, STARTER AIR INTAKE	3	
- 11	25-52063- 1	• FILTER ASSY, STARTER AIR INLET	1	A-C
- 12	42172-3.214M4	• COUPLING (MAR)	2	A-C
- 13	4630-8	• GASKET (PA)	2	A-C
- 14	50839	• FILTER, AIR (PUP)	1	A-C
	AN901-4A	• GASKET, USE WITH INDEX 14	1	A-C
- 15	203-1600-7	• TUBE (DNKA)	1	A-C
- 16	AN833-4D	• ELBOW	1	A-C
	AN901-4A	• GASKET, USE WITH INDEX 16	1	A-C
	AN924-4D	• NUT, USE WITH INDEX 16	1	A-C
	25-52062- 1	• VALVE ASSEMBLY, ENGINE STARTER AIR	1	A-C
		ATTACHING PARTS		
- 17	AN3-4A	• BOLT	4	
	AN960D10	• WASHER	8	
	AN365-1032	• NUT	4	
		¤----¤-¤-¤----¤		
- 18	25-52061- 5	• • BRACKET	2	A-C
- 19	105054	• • VALVE, AIR, GFP	1	A-C
- 20	AN815-4D	• UNION	1	A-C
	AN901-4A	GASKET, USE WITH INDEX 20	1	
- 21	203-1600-5	• TUBE (DNKA)	1	A-C
- 22	AN919-2D	• REDUCER	1	A-C
- 23	4M36-03017	• WASHER (MDA)	1	A-C
- 24	203-1600-9	• TUBE (DNKA)	1	A-C
- 25	AN776-4D	• ELBOW	1	A-C
	AN775-4	• BOLT, USE WITH INDEX 25	1	A-C
	AN901-4A	• GASKET, USE WITH INDEX 25	2	
- 26	101025	• TUBE (FAKB)	1	A-C

Center Fuselage

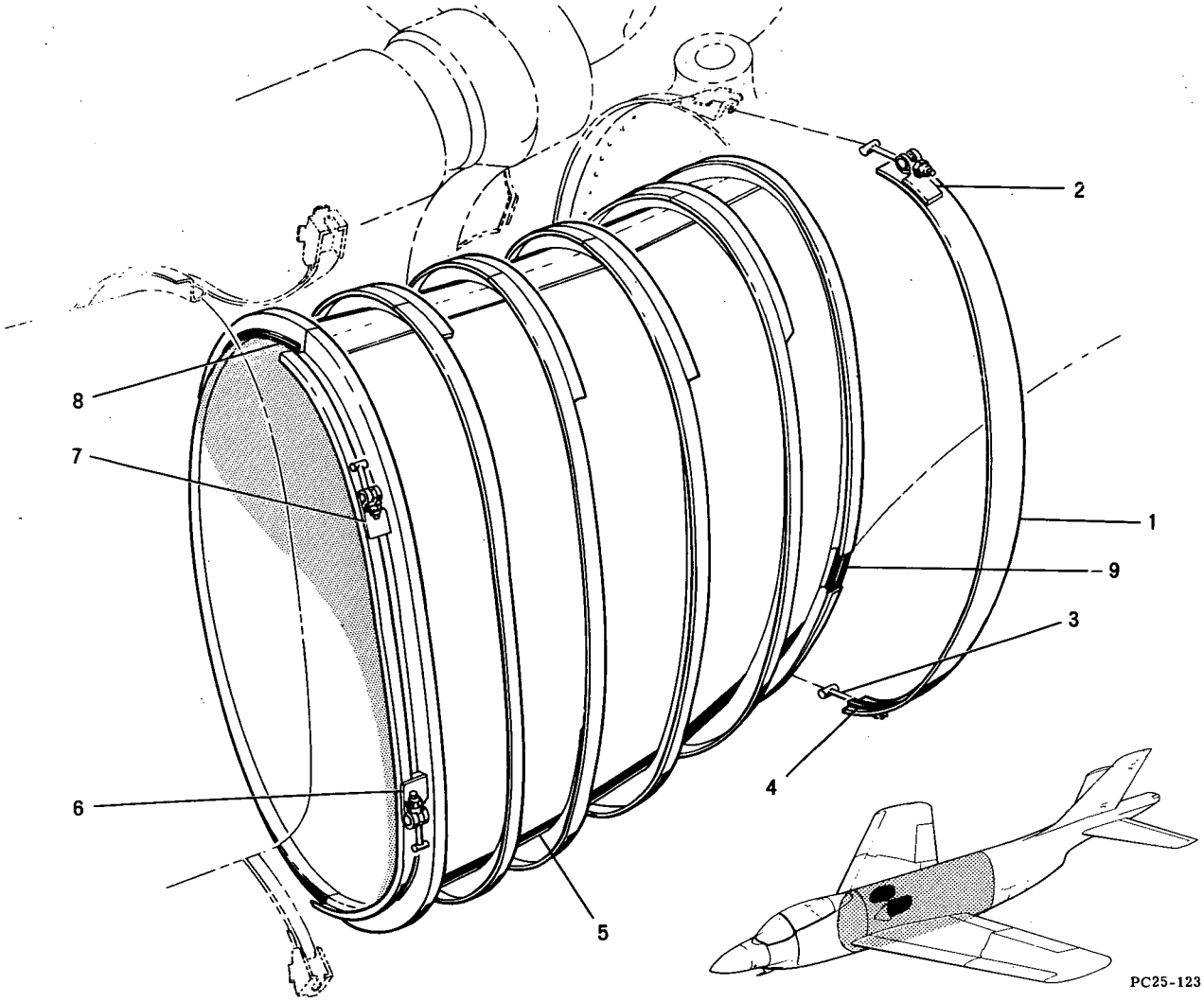

Figure 127 - Engine Air Inlet Duct Assembly

FIGURE & INDEX NUMBER	PART NUMBER	1 2 3 4 5 6 7 DESCRIPTION	UNITS PER ASS'Y	USABLE ON CODE
127 -	25-59000-301	DUCT ASSEMBLY, ENGINE AIR INLET LH, SEE FIG. 1 FOR NEXT HIGHER ASSEMBLY	1	
	25-59000-302	DUCT ASSEMBLY, ENGINE AIR INLET RH, SEE FIG. 1 FOR NEXT HIGHER ASSEMBLY	1	
- 1	25-59000- 43	. STRAP ASSEMBLY	1	
- 2	15151-1	. . STRAP, T BOLT (MAR)	1	
- 3	15151	. . STRAP, T BOLT (MAR)	1	
- 4	25-59000- 39	. . SEAL, SELECTED FROM 11M605 (MDA)	1	
- 5	25-59000-303	. DUCT ASSEMBLY, ENGINE AIR INLET LH	1	
	25-59000-304	. DUCT ASSEMBLY, ENGINE AIR INLET RH	1	
- 6	15151-1	. . STRAP, T BOLT (MAR)	1	
- 7	15151	. . STRAP, T BOLT (MAR)	1	
- 8	25-59000- 63	. . SEAL, SELECTED FROM 11M605 (MDA)	1	
- 9	25-59000- 37	. . SEAL, SELECTED FROM 11M605 (MDA)	1	

FIGURE & INDEX NUMBER	PART NUMBER	1 2 3 4 5 6 7 DESCRIPTION	UNITS PER ASS'Y	USABLE ON CODE
128 -	25-69098-901	HYDRAULIC INSTALLATION, ELECTRO PUMP, SEE FIG. 106 FOR NEXT HIGHER ASSEMBLY	REF	A
- 1	AN832-8D	. UNION	1	A
	AN6290-8	. GASKET, USE WITH INDEX 1	1	A
	AN6289D8	. NUT, USE WITH INDEX 1	1	A
- 2	AN939D8	. ELBOW	1	A
	AN6290-8	. GASKET, USE WITH INDEX 2	1	A
	AN6291-8	. RING, BACK UP, USE WITH INDEX 2	1	A
- 3	MS21916D8-5	. REDUCER	1	A
	AN6290-8	. GASKET, USE WITH INDEX 3	1	A
- 4	25-69195-151	. HOSE ASSY, AUXILIARY	1	A
	ER6292-5-14.50	. . HOSE ASSY (WH)	1	A
- 5	MS21908D5	. ELBOW	1	A
	AN6289D5	. NUT, USE WITH INDEX 5	1	A
	AN6291-5	. RING, BACK UP, USE WITH INDEX 5	1	A
	AN6290-5	. GASKET, USE WITH INDEX 5	1	A
- 6	AN939D5	. ELBOW	1	A
- 7	MS21903D5	. UNION	1	A
	AN6289D5	. NUT, USE WITH INDEX 7	1	A
	AN6291-5	. RING, BACK UP, USE WITH INDEX 7	1	A
	AN6290-5	. GASKET, USE WITH INDEX 7	2	A
- 8	AN894D10-5	. BUSHING	1	A
	AN6290-5	. GASKET, USE WITH INDEX 8	1	A
- 9	AN815-10D	. UNION	1	A
	AN6290-10	. GASKET, USE WITH INDEX 9	1	A
- 10	25-69195-149	. HOSE ASSY, AUXILIARY PUMP SUCTION	1	A
	MS28741-10-0270	. . HOSE ASSY	1	A
- 11	AN815-10D	. UNION	1	A
	AN6290-10	. GASKET, USE WITH INDEX 11	1	A
- 12	NAS424-10D	. COUPLING	1	A
- 13	MS21907D10	. ELBOW	1	A
	AN960D1416L	. WASHER, USE WITH INDEX 13	1	A
	AN6289D10	. NUT, USE WITH INDEX 13	1	A
	AN6291-10	. RING, BACK UP, USE WITH INDEX 13	1	A
	AN6290-10	. GASKET, USE WITH INDEX 13	1	A
- 14	MS21908D5	. ELBOW	1	
	AN924-5D	. NUT, USE WITH INDEX 14	1	
	AN960D816	. WASHER, USE WITH INDEX 14	1	
- 15	25-69361- 83	. TUBE ASSY, AUXILIARY PUMP PRESSURE	1	
- 16	MS21916D8-5	. REDUCER	1	
	AN6290-8	. GASKET, USE WITH INDEX 16	1	
- 17	25-69062- 29	. TUBE ASSY, POWER CONTROL RETURN	1	
- 18	MS21916D5-4	. REDUCER	1	
- 19	MS21902D4	. UNION	1	
	AN6290-4	. GASKET, USE WITH INDEX 19	1	
- 20	MS21907D5	. ELBOW	1	
	AN924-5D	. NUT, USE WITH INDEX 20	1	
	AN960D816	. WASHER, USE WITH INDEX 20	1	
- 21	25-69208- 55	. TUBE ASSY, POWER CONTROL RETURN	1	
- 22	AN938D5	. TEE	1	
	AN6290-5	. GASKET, USE WITH INDEX 22	3	
	AN6291-5	. RING, BACK UP, USE WITH INDEX 22	1	
- 23	MS21903D5	. UNION	1	
	AN6289D5	. NUT, USE WITH INDEX 23	1	
- 24	AN893-8D	. BUSHING	1	
	AN6290-5	. GASKET, USE WITH INDEX 24	1	
	AN6291-5	. RING, BACK UP, USE WITH INDEX 24	1	
	AN6290-8	. GASKET, USE WITH INDEX 24	1	
- 25	MS21908D5	. ELBOW	1	
	AN6289D5	. NUT, USE WITH INDEX 25	1	
- 26	AN6295-2	. REGULATOR	1	
		ATTACHING PARTS		
- 27	AN3-22A	. BOLT	3	
	NAS43DD3-35	. SPACER	3	
	AN960D10L	. WASHER	3	
	AN364-1032	. NUT	3	
		¤----¤-¤-¤----¤		
- 28	25-69361-901	. TUBE ASSY, DRAIN LINE	1	A
- 29	MS21916D4-3	. REDUCER	1	A
	AN6290-3	. GASKET, USE WITH INDEX 29	1	A
- 30	49300	. UNIT, ELECTRO HYDRAULIC POWER (AIR)	1	A
		ATTACHING PARTS		
- 31	AN4-11A	. BOLT	4	
	AN960D416	. WASHER	4	
	AN365-428	. NUT	4	A
		¤----¤-¤-¤----¤		
- 32	83760	. STUD (AITR)	1	A
- 33	83761	. STUD (AITR)	1	A

Center Fuselage

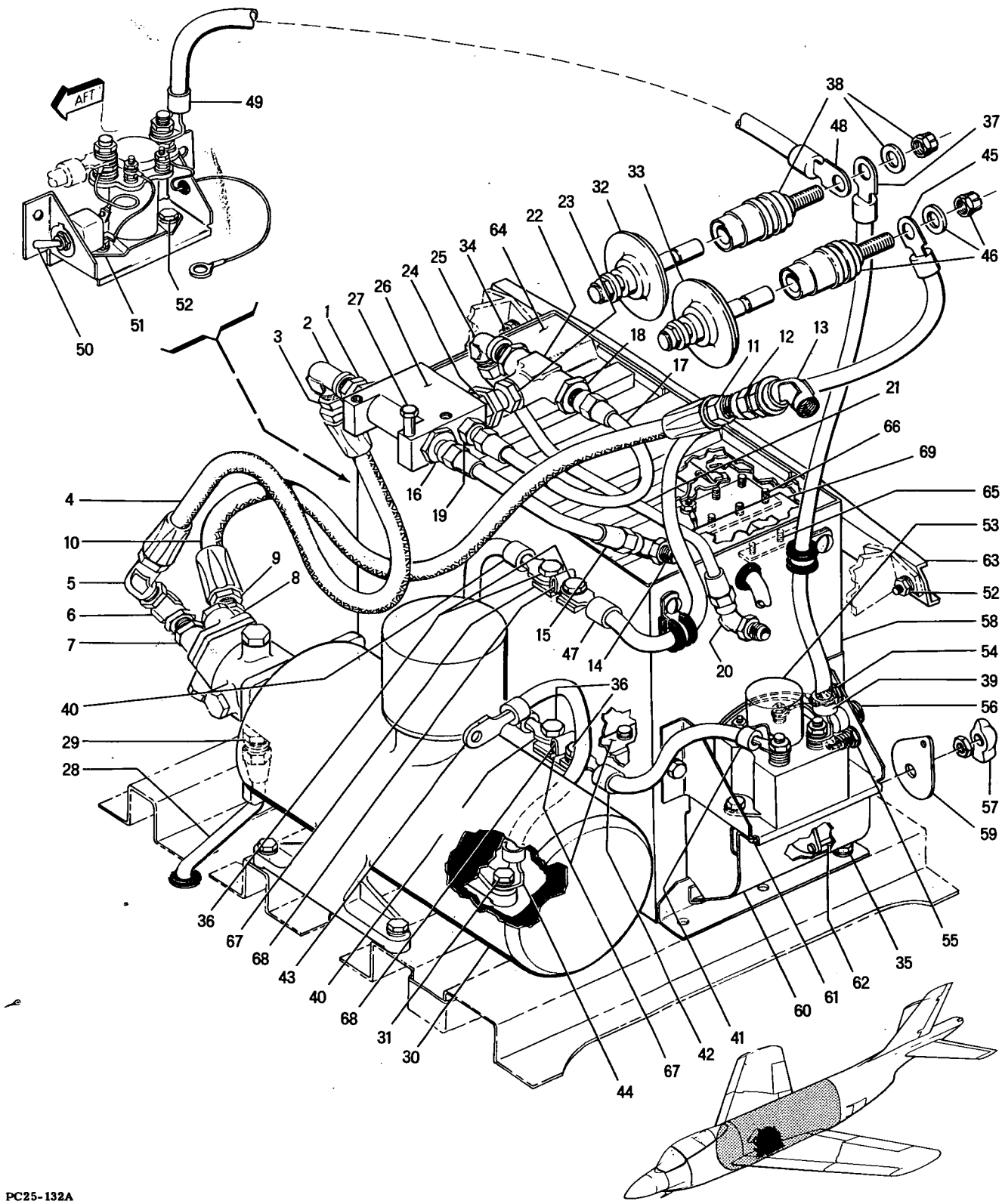

PC25-132A

Figure 128 -- Electro Pump Hydraulic Installation

FIGURE & INDEX NUMBER	PART NUMBER	1 2 3 4 5 6 7 DESCRIPTION	UNITS PER ASS'Y	USABLE ON CODE
128 -	25-77005- 1	• BOX ASSY, SILVER CELL BATTERY	1	A
		ATTACHING PARTS		
- 34	AN3-5A	• BOLT	4	
	4M36-01012	• WASHER (MDA)	4	
- 35	AN4-13A	• BOLT	2	
	AN960D416	• WASHER	2	
		¤----¤-¤-¤----¤		
- 36	AN5-6A	• • BOLT	4	A
	AN961-516	• • WASHER	4	A
	AN364-524	• • NUT	4	A
	25-77005-101	• • CABLE ASSEMBLY	1	A
- 37	G573	• • • TERMINAL (TOM)	1	A
- 38	83020	• • • DISCONNECT, QUICK (AITR)	1	A
- 39	G573U	• • • TERMINAL (TOM)	1	A
	25-77005- 59	• • CABLE ASSEMBLY	1	A
- 40	G572	• • • TERMINAL (TOM)	2	A
	25-77005- 47	• • CABLE ASSEMBLY	1	A
- 41	G573	• • • TERMINAL (TOM)	1	A
- 42	G572	• • • TERMINAL (TOM)	1	A
	25-77005- 57	• • CABLE ASSEMBLY	1	A
- 43	G573	• • • TERMINAL (TOM)	1	A
- 44	YAV2C-R1	• • • TERMINAL (BE)	1	A
	25-77005- 77	• • CABLE ASSEMBLY	1	A
- 45	G673	• • • TERMINAL (TOM)	1	A
- 46	83021	• • • DISCONNECT, QUICK (AITR)	1	A
- 47	G572	• • • TERMINAL (TOM)	1	A
	25-77005- 93	• • CABLE ASSEMBLY	1	A
- 48	G573	• • • TERMINAL (TOM)	1	A
- 49	YAV2C-R	• • • TERMINAL (BE)	1	A
- 50	AN3021-8	• • SWITCH, EMERGENCY HYDRAULIC PUMP TEST	1	A
- 51	AN3370-2	• • RELAY, EMERGENCY HYDRAULIC PUMP POWER	1	A
		ATTACHING PARTS		
- 52	AN4-4A	• • BOLT	2	
	AN960-416L	• • WASHER	2	
		¤----¤-¤-¤----¤		
- 53	6042H39	• • RELAY (CH)	1	A
		ATTACHING PARTS		
	AN3-4A	• • BOLT	2	
	AN960-10L	• • WASHER	2	
		¤----¤-¤-¤----¤		
- 54	AN3249-1	• • JACK, RED TIP VOLTMETER TEST	1	A
- 55	AN3249-2	• • JACK, BLACK TIP VOLTMETER TEST	1	A
- 56	AN3100-8S1S	• • RECEPTACLE	1	A
- 57	AN3220-3	• • KNOB	1	A
- 58	25-77005- 13	• • BOX ASSEMBLY	1	A
- 59	25-77005- 73	• • • PLATE, SWITCH	1	A
- 60	25-77005- 95	• • • COVER	1	A
- 61	NAS229-7	• • • SCREW	2	A
	AN960D10L	• • • WASHER	2	A
	25-89050- 5	• • • PLACARD, SILVER CELL BATTERY	1	A
- 62	JV9005	• • SWITCH (CN) SILVER CELL VOLTAGE SELECTOR TEST	1	A
- 63	25-77005- 21	• • CHANNEL	1	A
		ATTACHING PARTS		
	AN3-4A	• • BOLT	3	
	AN960D416L	• • WASHER	3	
		¤----¤-¤-¤----¤		
- 64	25-77005- 3	• • DECK ASSEMBLY	2	A
		ATTACHING PARTS		
	NAS229-8	• • SCREW	13	
	AN960D416L	• • WASHER	9	
	AN3-4A	• • BOLT	4	
	AN960D10L	• • WASHER	4	
		¤----¤-¤-¤----¤		
	25-77005- 31	• • • PAD	4	A
	25-77075- 3	• • SPACER, SILVER CELL BATTERY BOX	4	A
- 65	2089	• • CONNECTOR (YARD)	4	A
- 66	2072	• • CONNECTOR (YARD)	10	A
- 67	25-77005- 33	• • BUS BAR	4	A
- 68	25-77075- 5	• • SPACER, SILVER CELL BATTERY BOX	2	A
- 69	2088	• • CELL, SILVER (YARD)	16	A

Center Fuselage

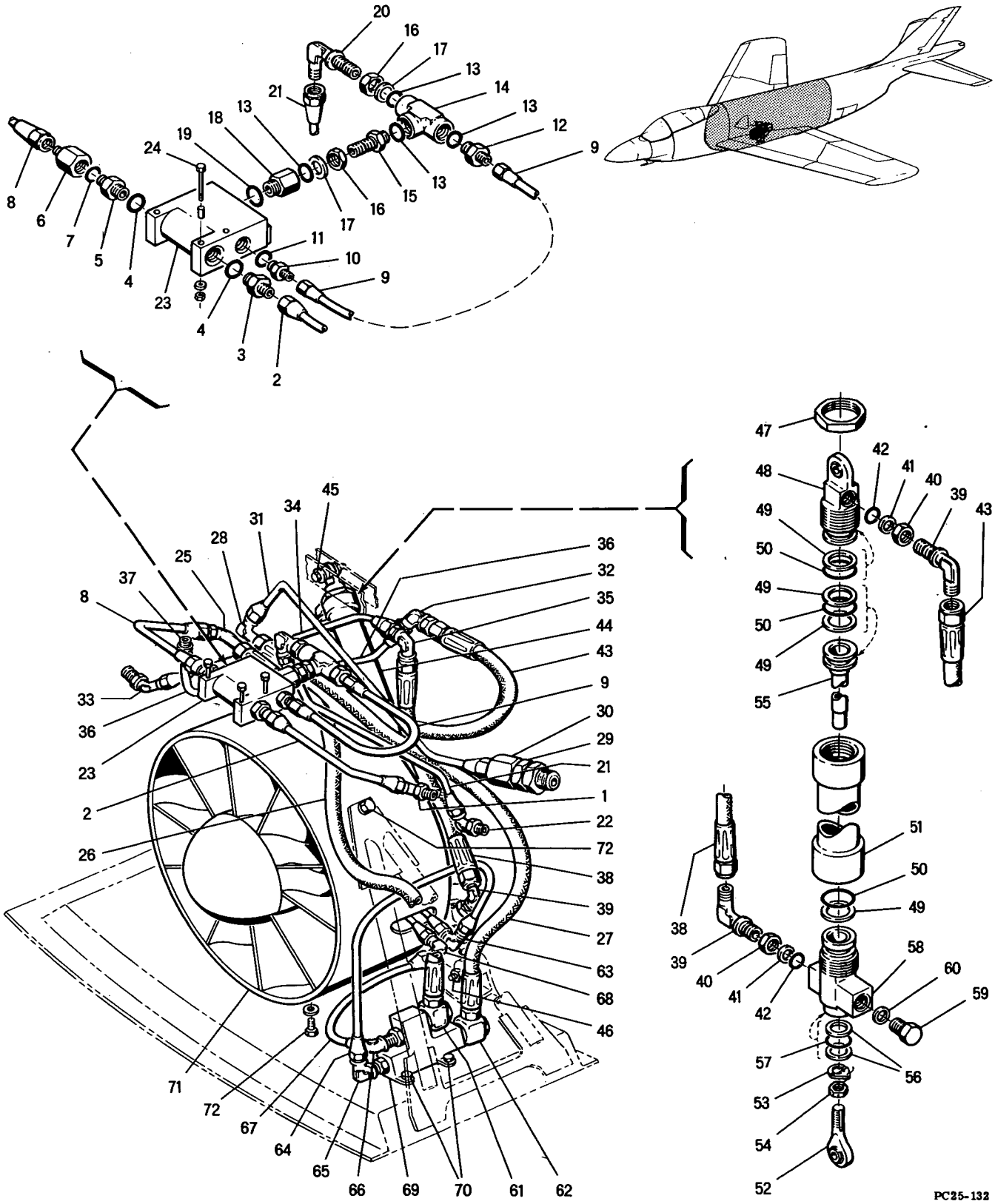

Figure 129 -- Ram Air Pump Hydraulic Installation

FIGURE & INDEX NUMBER	PART NUMBER	1 2 3 4 5 6 7 DESCRIPTION	UNITS PER ASS'Y	USABLE ON CODE
129 -	25-69098- 1	HYDRAULIC INSTL, RAM AIR PUMP, SEE FIG. 106-28 FOR NEXT HIGHER ASSY	REF	B
	25-69098-301	HYDRAULIC INSTL, RAM AIR PUMP, SEE FIG. 106-28 FOR NEXT HIGHER ASSY	REF	C-F
- 1	MS21908D5	• ELBOW	1	
	AN924-5D	• NUT, USE WITH INDEX 1	1	
	AN960D816	• WASHER, USE WITH INDEX 1	1	
- 2	25-69361- 83	• TUBE ASSY, AUXILIARY PUMP PRESSURE	1	
- 3	MS21916D8-5	• REDUCER	1	
- 4	AN6290-8	• GASKET	2	
- 5	AN919-12D	• REDUCER	1	B-F
- 6	MS21915D6-5	• BUSHING	1	B-F
- 7	AN6290-6	• GASKET	1	B-F
- 8	25-69208- 13	• TUBE ASSY, AUXILIARY PUMP PRESSURE	1	B-F
- 9	25-69062- 29	• TUBE ASSY, POWER CONTROL RETURN	1	
- 10	MS21902D4	• UNION	1	
- 11	AN6290-5	• GASKET	1	
- 12	MS21916D5-4	• REDUCER	1	
- 13	AN6290-5	• GASKET	4	
- 14	AN938D5	• TEE	1	
- 15	MS21903D5	• UNION	1	
- 16	AN6289D5	• NUT	2	
- 17	AN6291-5	• RING, BACK UP	2	
- 18	AN893-8D	• BUSHING	1	
- 19	AN6290-8	• GASKET	1	
- 20	MS21908D5	• ELBOW	1	
- 21	25-69208- 55	• TUBE ASSY, POWER CONTROL RETURN	1	
- 22	MS21907D5	• ELBOW	1	
	AN924-5D	• NUT, USE WITH INDEX 22	1	
	AN960D816	• WASHER, USE WITH INDEX 22	1	
- 23	AN6295-2	• REGULATOR, AUX PUMP PRESSURE & POWER CONTROL	1	
		ATTACHING PARTS		
- 24	AN3-22A	• BOLT	3	
	NAS43DD3-35	• SPACER	3	
	AN960D10L	• WASHER	3	
	AN364-1032	• NUT	3	
		¤----¤-¤-¤----¤		
- 25	MS21908D5	• ELBOW	1	B-F
	AN924-5D	• NUT, USE WITH INDEX 25	1	B-F
	AN960D816	• WASHER, USE WITH INDEX 25	1	B-F
- 26	25-69195-113	• HOSE ASSY, POWER CONTROL RETURN	1	B-F
	ER6292-5-25.50	• • HOSE ASSY (WH)	1	B-F
- 27	25-69195-107	• HOSE ASSY, AUXILIARY PUMP SUCTION	1	B-F
	ER6292-6-26.75	• • HOSE ASSY (WH)	1	B-F
- 28	MS21908D6	• ELBOW	1	B-F
	AN924-6D	• NUT, USE WITH INDEX 28	1	B-F
	AN960D916	• WASHER, USE WITH INDEX 28	1	B-F
- 29	MS21903D16	• UNION	1	
	AN924-16D	• NUT, USE WITH INDEX 29	1	
	AN960D2116L	• WASHER, USE WITH INDEX 29	1	
- 30	MS21915D16-6	• BUSHING	1	
	AN6289D16	• NUT, USE WITH INDEX 30	1	
	AN6291-16	• RING, USE WITH INDEX 30	1	
	AN6290-16	• GASKET, USE WITH INDEX 30	1	
- 31	25-69327- 55	• TUBE ASSY, AUXILIARY PUMP SUCTION	1	
- 32	MS21907D4	• ELBOW	1	B
	MS21908D4	• ELBOW	1	C-F
	AN924-4D	• NUT, USE WITH INDEX 32	1	B-F
	AN960D716	• WASHER, USE WITH INDEX 32	1	B-F
- 33	MS21907D4	• ELBOW	1	
	AN924-4D	• NUT, USE WITH INDEX 33	1	
	AN960-716	• WASHER, USE WITH INDEX 33	1	
- 34	25-69327- 3	• TUBE ASSY, EMERGENCY PUMP DOOR CLOSE	1	B-F
- 35	MS21908D4	• ELBOW	1	B-F
	AN924-4D	• NUT, USE WITH INDEX 35	1	B-F
	AN960D716	• WASHER, USE WITH INDEX 35	1	B-F
- 36	25-69327- 5	• TUBE ASSY, EMERGENCY PUMP DOOR OPEN	1	B
	25-69278- 71	• TUBE ASSY, EMERGENCY PUMP DOOR OPEN	1	C-F
- 37	MS21903D4	• UNION	1	B
	AN924-4D	• NUT, USE WITH INDEX 37	1	B
- 38	25-69195-109	• HOSE ASSY, EMERGENCY PUMP DOOR CLOSE	1	B-F
	ER6292-4-11.25	• • HOSE ASSY (WH)	1	B-F
- 39	MS21908D4	• ELBOW	2	B-F
- 40	AN6289D4	• NUT	2	B-F
- 41	AN6291-4	• RING	2	B-F
- 42	AN6290-4	• GASKET	2	B-F
- 43	25-69195-111	• HOSE ASSY, EMERGENCY PUMP DOOR OPEN	1	B-F
	ER6292-4-23	• • HOSE ASSY (WH)	1	B-F

FIGURE & INDEX NUMBER	PART NUMBER	1 2 3 4 5 6 7 DESCRIPTION	UNITS PER ASS'Y	USABLE ON CODE
129 - 44	25-72021- 1	• ACTUATOR ASSY, RAM AIR PUMP EMERGENCY DOOR PNEUMATIC	1	B-F
		ATTACHING PARTS		
- 45	AN174-13A	• BOLT	1	
	AN960D416	• WASHER	2	
	AN364-428	• NUT	1	
- 46	3M20SA12	• BOLT (MDA)	1	
	AN960D416	• WASHER	2	
	AN364-428	• NUT	1	
		¤----¤-¤-¤----¤		
- 47	25-72027- 3	• • NUT, RAM AIR PUMP EMERGENCY DOOR ACTUATOR	1	B-F
- 48	25-72024- 1	• • CAP ASSY, RAM AIR PUMP EMERGENCY DOOR ACTUATOR END	1	B-F
	BSR4000G-C	• • • BEARING (SWPC)	1	B-F
	NAS516-1	• • FITTING, LUB	1	
- 49	AN6246-17	• • RING, BACK UP	4	B-F
- 50	AN6227B17	• • PACKING, O RING	3	B-F
- 51	25-72022- 3	• • BARREL, RAM AIR PUMP EMERGENCY DOOR ACTUATOR	1	B-F
- 52	25-72025- 3	• • ROD END, RAM AIR PUMP EMERGENCY DOOR ACTUATOR, ALTERED FROM BRE4095L (SWPC)	1	B-F
- 53	9M103-6	• • WASHER, LOCK (MDA)	1	B-F
- 54	9M104-6	• • NUT, JAM (MDA)	1	B-F
- 55	25-72026- 1	• • PISTON ASSY, RAM AIR PUMP EMERGENCY DOOR ACTUATOR	1	B-F
- 56	AN6246-10	• • RING, BACK UP	2	B-F
- 57	AN6227B10	• • PACKING, O RING	1	
- 58	25-72023- 3	• • CAP, RAM AIR PUMP EMERGENCY DOOR ACTUATOR	1	B-F
- 59	AN814-4D	• PLUG	1	B-F
- 60	AN6290-4	• GASKET	1	B-F
- 61	7M7D5	• SWIVEL ASSY, RAM AIR PUMP (MDA)	1	B-F
- 62	7M7D6	• SWIVEL ASSY, RAM AIR PUMP (MDA)	1	B-F
- 63	MS21904D6	• ELBOW	1	B-F
- 64	25-69362- 71	• TUBE ASSY, AUXILIARY PUMP SUCTION	1	B-F
- 65	MS21908D6	• ELBOW	1	B-F
	AN6289D6	• NUT, USE WITH INDEX 65	1	B-F
	AN6291-6	• RING, BACK UP, USE WITH INDEX 65	1	B-F
	AN6290-6	• GASKET, USE WITH INDEX 65	1	B-F
- 66	MS21907D5	• ELBOW	1	B-F
	AN6289D5	• NUT, USE WITH INDEX 66	1	B-F
	AN6291-5	• RING, BACK UP, USE WITH INDEX 66	1	B-F
	AN6290-5	• GASKET, USE WITH INDEX 66	1	B-F
- 67	25-69361- 85	• TUBE ASSY, AUXILIARY PUMP PRESSURE	1	B-F
- 68	MS21904D5	• ELBOW	1	B-F
- 69	25-69329- 3	• BLOCK, RAM AIR PUMP SWIVEL MOUNTING	1	B-F
		ATTACHING PARTS		
- 70	AN3-5A	• BOLT	4	
	AN960D10L	• WASHER	4	
		¤----¤-¤-¤----¤		
- 71	49630	• PUMP, HYDRAULIC EMERGENCY RAM AIR TURBINE (AIR) MCDONNELL SPEC 25-69012-3	1	B-F
		ATTACHING PARTS		
- 72	AN76A6	• BOLT	3	
	AN960D616	• WASHER	3	
		¤----¤-¤-¤----¤		

FIGURE & INDEX NUMBER	PART NUMBER	1 2 3 4 5 6 7 DESCRIPTION	UNITS PER ASS'Y	USABLE ON CODE
130 -	25-69099- 1	HYDRAULIC & AIR INSTALLATION, CENTER FUSELAGE, FUSELAGE STATION 232.4 TO FUSELAGE STATION 277.3, SEE FIG. 106-27 FOR NEXT HIGHER ASSY	REF	A
	25-69099-301	HYDRAULIC & AIR INSTALLATION, CENTER FUSELAGE, FUSELAGE STATION 232.4 TO FUSELAGE STATION 277.3, SEE FIG. 106-27 FOR NEXT HIGHER ASSY	REF	
- 1	25-69062- 63	• TUBE ASSEMBLY, EMERGENCY LANDING GEAR DOWN	1	
- 2	25-69359- 3	• TUBE ASSEMBLY, UTILITY PRESSURE	1	
- 3	25-69360- 81	• TUBE ASSEMBLY, UTILITY RETURN	1	
- 4	AN6280-12	• VALVE, CHECK	1	
- 5	25-69359- 81	• TUBE ASSEMBLY, UTILITY RETURN	1	
- 6	25-69359- 79	• TUBE ASSEMBLY, UTILITY RETURN	1	
- 7	25-69359- 85	• TUBE ASSEMBLY, UTILITY RETURN	1	
- 8	25-69208-119	• TUBE ASSEMBLY, UTILITY RETURN	1	
- 9	25-69062- 57	• TUBE ASSEMBLY, LH BRAKE OPERATE	1	
- 10	25-69362- 75	• TUBE ASSEMBLY, LH BRAKE OPERATE	1	
- 11	25-69362- 77	• TUBE ASSEMBLY, LH BRAKE BLEED	1	
- 12	25-69062- 59	• TUBE ASSEMBLY, RH BRAKE OPERATE	1	
- 13	25-69362- 83	• TUBE ASSEMBLY, RH BRAKE BLEED	1	
- 14	25-69362- 81	• TUBE ASSEMBLY, RH BRAKE OPERATE	1	
- 15	25-69062- 65	• TUBE ASSEMBLY, LANDING GEAR UP	1	
- 16	25-69062- 77	• TUBE ASSEMBLY, LANDING GEAR UP	1	
- 17	72-100-1-25	• RESTRICTOR (GPPI)	1	
- 18	25-69362- 51	• TUBE ASSEMBLY, AUXILIARY AIR DOOR CLOSED	1	
- 19	25-69195- 97	• HOSE ASSEMBLY, AUXILIARY AIR DOOR CLOSED	1	
	ER6292-4-22.75	• • HOSE ASSEMBLY (WH)	1	
- 20	25-69195- 95	• HOSE ASSEMBLY, AUXILIARY AIR DOOR OPEN	1	
	ER6292-4-19.75	• • HOSE ASSEMBLY (WH)	1	
- 21	25-69362- 45	• TUBE ASSEMBLY, AUXILIARY AIR DOOR OPEN	1	
- 22	25-69062- 67	• TUBE ASSEMBLY, LANDING GEAR DOWN	1	
- 23	25-69062- 69	• TUBE ASSEMBLY, LANDING GEAR DOWN	1	
- 24	25-69195- 99	• HOSE ASSEMBLY, AUXILIARY AIR DOOR OPEN	1	
	ER6292-4-27	• • HOSE ASSEMBLY (WH)	1	
- 25	25-69195-101	• HOSE ASSEMBLY, AUXILIARY AIR DOOR CLOSED	1	
	ER6292-4-29.5	• • HOSE ASSEMBLY (WH)	1	
- 26	25-69362- 49	• TUBE ASSEMBLY, AUXILIARY AIR DOOR CLOSED	1	
- 27	25-69068- 1	• ACTUATOR INSTALLATION, ENGINE AUX AIR DOOR LH, SEE FIG. 110	1	
- 28	25-69068- 2	• ACTUATOR INSTALLATION, ENGINE AUX AIR DOOR RH, SEE FIG. 110	1	
- 29	25-69359- 5	• TUBE ASSEMBLY, AILERON PRESSURE	1	
- 30	25-69359- 83	• TUBE ASSEMBLY, AILERON RETURN	1	
- 31	25-69062-103	• TUBE ASSEMBLY, UTILITY RESERVOIR SCUPPER DRAIN	1	
- 32	25-69359- 89	• TUBE ASSEMBLY, HYDRAULIC RESERVOIR DRAIN	1	
- 33	350B1A	• VALVE, MANUALLY OPERATED VENT (AADC) MCDONNELL SPEC 25-69001-3	1	
- 34	25-69359- 17	• TUBE ASSY, AIR BLEED	1	
- 35	25-69359- 21	• TUBE ASSY, AIR GAGE	1	
- 36	25-69208- 71	• TUBE ASSY, STATIC AIR	1	
- 37	25-69208- 69	• TUBE ASSY, STATIC AIR	1	
- 38	25-69327- 41	• TUBE ASSY, STATIC AIR	1	
- 39	25-69327- 39	• TUBE ASSY, STATIC AIR	1	
- 40	AN6240-1	• FILTER, HYDRAULIC	1	
- 41	25-69208- 65	• TUBE ASSY, STATIC AIR	1	
- 42	25-69208- 61	• TUBE ASSEMBLY, EXTERNAL AIR	1	
- 43	299A4BB	• VALVE, CHECK (JAPC)	1	
	MS21902D4	• UNION, USE WITH INDEX 43	1	
	AN6290-4	• GASKET, USE WITH INDEX 43	1	
- 44	25-69208- 63	• TUBE ASSY, STATIC AIR	1	
- 45	312735	• REGULATOR, RESERVOIR AIR PRESSURE (GPC)	1	
		ATTACHING PARTS		
	NAS464-3A16	• BOLT	2	
	AN960D10L	• WASHER	2	
		¤----¤-¤-¤----¤		
- 46	25-69327- 45	• TUBE ASSEMBLY, PRESSURE REGULATOR VENT	1	
- 47	25-69327- 43	• TUBE ASSEMBLY, RELIEF VALVE VENT	1	
- 48	11631	• VALVE, RELIEF (KY)	1	
		ATTACHING PARTS		
	AN3-14A	• BOLT	2	
	AN960D10	• WASHER	2	
		¤----¤-¤-¤----¤		
- 49	25-69327- 47	• TUBE ASSEMBLY, PRESSURE REGULATOR VENT	1	
- 50	25-69062-109	• TUBE ASSEMBLY, PRESSURE REGULATOR VENT	1	
- 51	25-72019- 7	• TUBE ASSEMBLY, EMERGENCY AIR PRESSURE	1	
- 52	25-72019- 5	• TUBE ASSY, GUN CHARGE	1	
- 53	25-69359- 15	• TUBE ASSEMBLY, UTILITY SUCTION	1	
- 54	25-69361-109	• TUBE ASSEMBLY, UTILITY SUCTION	1	

Center Fuselage

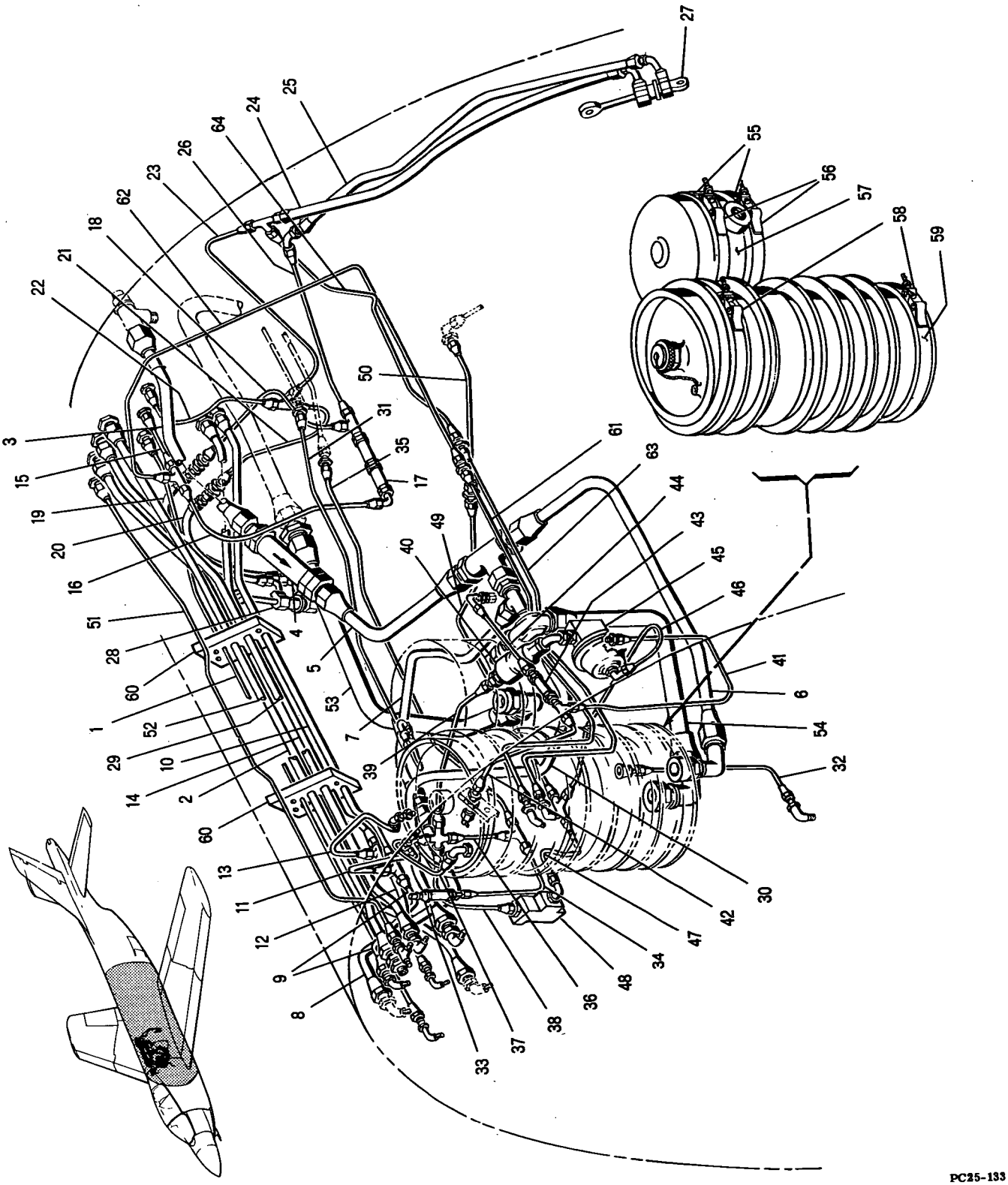

Figure 130 -- Center Fuselage Hydraulic and Air Installation (Fuselage Section 232.4 to Fuselage Station 277.3) (Sheet 1 of 2)

FIGURE & INDEX NUMBER	PART NUMBER	1 2 3 4 5 6 7 DESCRIPTION	UNITS PER ASS'Y	USABLE ON CODE
130 - 55	16893-10	• CLAMP ASSY (MAR)	2	
		ATTACHING PARTS		
	AN394-37	• PIN, FLAT HEAD	2	
	AN380-2-2	• PIN, COTTER	2	
		¤----¤-¤-¤----¤		
- 56	16893-12	• CLAMP ASSY (MAR)	2	
		ATTACHING PARTS		
	AN394-37	• PIN, FLAT HEAD	2	
	AN380-2-2	• PIN, COTTER	2	
		¤----¤-¤-¤----¤		
- 57	25-69254-301	• FILTER ASSEMBLY, HYDRAULIC SYS, SEE FIG. 134	1	
- 58	1046	• CLAMP (NUCA)	2	
		ATTACHING PARTS		
	AN394-37	• PIN, FLAT HEAD	4	
	AN380-2-2	• PIN, COTTER	4	
		¤----¤-¤-¤----¤		
- 59	25-69033- 1	• RESERVOIR ASSY, UTILITY HYD SYS, SEE FIG. 134	1	A
	25-69033-301	• RESERVOIR ASSY, UTILITY HYD SYS, SEE FIG. 134	1	B-F
- 60	25-69226- 1	• BLOCK ASSEMBLY, HYDRAULIC LINE SUPPORT	2	
		ATTACHING PARTS		
	AN3-25A	• BOLT	4	
	AN960D10L	• WASHER	4	
		¤----¤-¤-¤----¤		
- 61	25-69062- 81	• TUBE ASSEMBLY, LANDING GEAR UP	1	
- 62	25-69062- 79	• TUBE ASSEMBLY, LANDING GEAR UP	1	
- 63	25-69062- 75	• TUBE ASSEMBLY, LANDING GEAR DOWN	1	
- 64	25-69062- 73	• TUBE ASSEMBLY, LANDING GEAR DOWN	1	
- 65	MS21908D4	• ELBOW	4	
	AN924-4D	• NUT, USE WITH INDEX 65	4	
	AN960D716	• WASHER, USE WITH INDEX 65	4	
- 66	MS21908D5	• ELBOW	2	
	AN924-5D	• NUT, USE WITH INDEX 66	2	
	AN960D816	• WASHER, USE WITH INDEX 66	2	
- 67	MS21903D8	• UNION	1	
	AN924-8D	• NUT, USE WITH INDEX 67	1	
	AN960D1216	• WASHER, USE WITH INDEX 67	1	
- 68	MS21911D4	• TEE	1	
	AN960D716	• WASHER, USE WITH INDEX 68	1	
	AN924D4	• NUT, USE WITH INDEX 68	1	
- 69	MS21908D8	• ELBOW	2	
	AN924-8D	• NUT, USE WITH INDEX 69	2	
	AN960D1216	• WASHER, USE WITH INDEX 69	2	
- 70	MS21905D5	• TEE	2	
- 71	MS21907D5	• ELBOW	2	
	AN924-5D	• NUT, USE WITH INDEX 71	2	
	MS21914D5	• CAP, USE WITH INDEX 71	2	
- 72	MS21902D8	• UNION	1	
- 73	MS21908D4	• ELBOW	8	
	AN6289D4	• NUT, USE WITH INDEX 73	8	
	AN6291-4	• RING, BACK UP, USE WITH INDEX 73	8	
	AN6290-4	• GASKET, USE WITH INDEX 73	8	
- 74	MS21916D6-4	• REDUCER	2	
	AN6290-6	• GASKET, USE WITH INDEX 74	2	
- 75	MS21902D12	• UNION	4	
	AN6290-12	• GASKET, USE WITH INDEX 75	4	
- 76	MS21905D4	• TEE	4	
- 77	MS21903D4	• UNION	2	
	AN924-4D	• NUT, USE WITH INDEX 77	2	
- 78	MS21912D4	• TEE	1	
	AN924-4D	• NUT, USE WITH INDEX 78	1	
	AN960D716	• WASHER, USE WITH INDEX 78	1	
- 79	MS21907D4	• ELBOW	1	
	AN924-4D	• NUT, USE WITH INDEX 79	1	
	AN960D716	• WASHER, USE WITH INDEX 79	1	
- 80	MS21902D4	• UNION	4	
- 81	MS21912D4	• TEE	2	
	AN6289D4	• NUT, USE WITH INDEX 81	2	
	AN6291-4	• RING, BACK UP, USE WITH INDEX 81	2	
	AN6290-4	• GASKET, USE WITH INDEX 81	2	
- 82	MS21902D16	• UNION	1	
- 83	MS21908D4	• ELBOW	1	
	AN924-4D	• NUT, USE WITH INDEX 83	1	
	5160-534024-4	• GASKET (PA) USE WITH INDEX 83	1	
- 84	MS21902D4	• UNION	1	
- 85	AN938D12	• TEE	1	

Center Fuselage

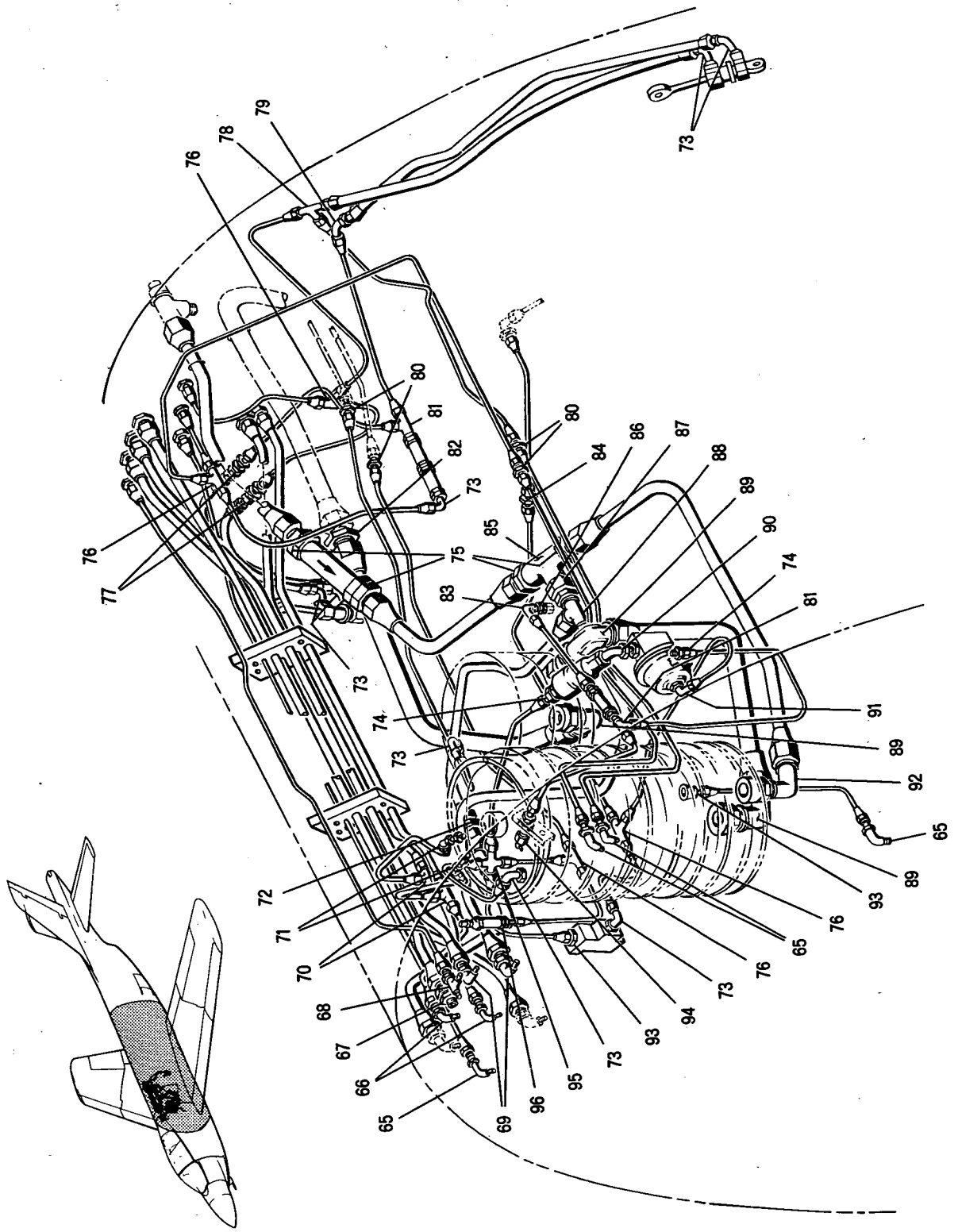

Figure 130 -- Center Fuselage Hydraulic and Air Installation (Fuselage Station 232.4 to Fuselage Station 277.3) (Sheet 2 of 2)

FIGURE & INDEX NUMBER	PART NUMBER	1 2 3 4 5 6 7 DESCRIPTION	UNITS PER ASS'Y	USABLE ON CODE
130 - 86	AN893-5D	• BUSHING	1	
	5160-534024-16	• GASKET (PA) USE WITH INDEX 86	1	
- 87	AN893-16D	• BUSHING	1	
	AN6290-12	• GASKET, USE WITH INDEX 87	1	
- 88	MS21912D8	• TEE	1	
	AN6289D8	• NUT, USE WITH INDEX 88	1	
	AN6291-8	• RING, BACK UP, USE WITH INDEX 88	1	
	AN6290-8	• GASKET, USE WITH INDEX 88	1	
- 89	MS21908D16	• ELBOW	3	
	AN6289D16	• NUT, USE WITH INDEX 89	3	
	AN6291-16	• RING, BACK UP, USE WITH INDEX 89	3	
	AN6290-16	• GASKET, USE WITH INDEX 89	3	
- 90	AN941D6	• ELBOW	1	
	MS21902D6	• UNION, USE WITH INDEX 90	1	
	MS21903D6	• UNION, USE WITH INDEX 90	1	
	AN6290-6	• GASKET, USE WITH INDEX 90	4	
	AN6291-6	• RING, BACK UP, USE WITH INDEX 90	1	
	AN6289D6	• NUT, USE WITH INDEX 90	1	
- 91	MS21908D4	• ELBOW	1	
	AN6290-4	• GASKET, USE WITH INDEX 91	1	
	AN6291-4	• RING, BACK UP, USE WITH INDEX 91	1	
	AN6289D4	• NUT, USE WITH INDEX 91	1	
	AN893-2D	• REDUCER, USE WITH INDEX 91	1	
	AN6290-6	• GASKET, USE WITH INDEX 91	1	
- 92	MS21908D12	• ELBOW	1	
	AN6289D12	• NUT, USE WITH INDEX 92	1	
	AN6291-12	• RING, BACK UP, USE WITH INDEX 92	1	
	AN6290-12	• GASKET, USE WITH INDEX 92	1	
- 93	MS21902D4	• UNION	2	
	AN6290-4	• GASKET, USE WITH INDEX 93	2	
- 94	MS21903D4	• UNION	1	
	ER929-4	• CAP (WH) USE WITH INDEX 94	1	
	AN924-4D	• NUT, USE WITH INDEX 94	1	
	RS106A60	• CHAIN ASSEMBLY (RYY) USE WITH INDEX 94	1	
- 95	MS21906D4	• CROSS	1	
- 96	MS21903D4	• UNION	1	
	AN924-4D	• NUT, USE WITH INDEX 96	1	
	AN6290-4	• GASKET, USE WITH INDEX 96	1	

Center Fuselage

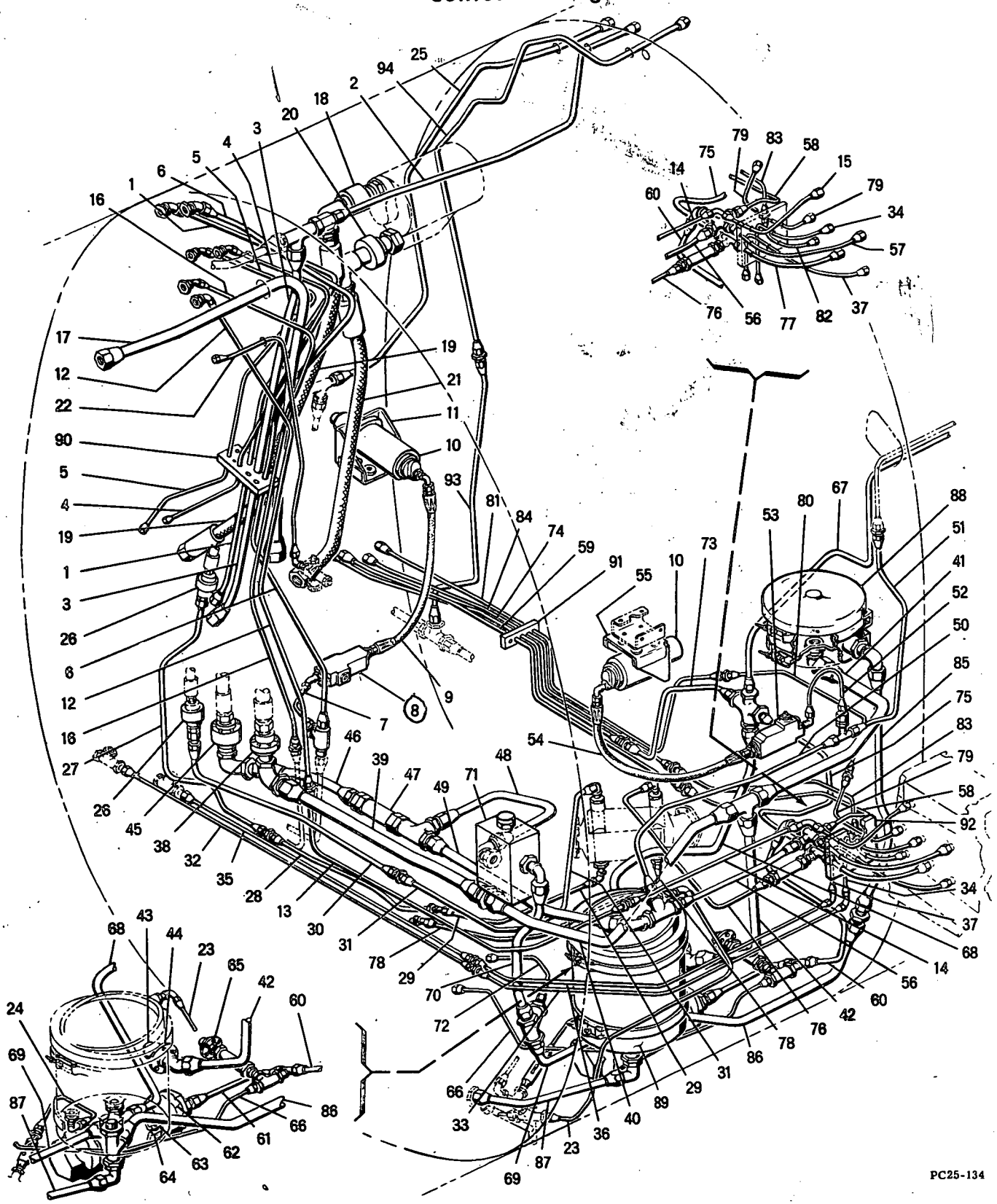

Figure 131 -- Center Fuselage Hydraulic Installation
(Engine Accessories Compartment, Upper and Left Side) (Sheet 1 of 2)

FIGURE & INDEX NUMBER	PART NUMBER	1 2 3 4 5 6 7 DESCRIPTION	UNITS PER ASS'Y	USABLE ON CODE
131 -	25-69099- 1	HYDRAULIC INSTL, CENTER FUSELAGE, ENGINE ACCESSORIES COMPARTMENT, UPPER & LEFT SIDE, SEE FIG. 106-27 FOR NEXT HIGHER ASSEMBLY	REF	A
	25-69099-301	HYDRAULIC INSTL, CENTER FUSELAGE, ENGINE ACCESSORIES COMPARTMENT, UPPER & LEFT SIDE, SEE FIG. 106-27 FOR NEXT HIGHER ASSEMBLY	REF	B
- 1	25-69359- 61	• TUBE ASSEMBLY, UTILITY PRESSURE	1	
- 2	25-69361- 29	• TUBE ASSEMBLY, UTILITY RETURN	1	
- 3	25-69359- 53	• TUBE ASSEMBLY, UTILITY RETURN	1	
- 4	25-69359- 71	• TUBE ASSEMBLY, LANDING GEAR DOWN	1	
- 5	25-69359- 69	• TUBE ASSEMBLY, LANDING GEAR UP	1	
- 6	25-69208- 51	• TUBE ASSEMBLY, AILERON PRESSURE	1	
- 7	25-69208- 47	• TUBE ASSEMBLY, UTILITY PRESSURE	1	
- 8	4860-2	• FUSE, HYDRAULIC PRESSURE GAGE (WAH)	1	
		ATTACHING PARTS		
	AN3-15A	• BOLT	2	
	AN960D10	• WASHER	2	
	AN960D10L	• WASHER	2	
	AN364-1032	• NUT	2	
		¤-----¤-¤-¤-----¤		
- 9	25-69195-139	• HOSE ASSEMBLY, UTILITY PRESSURE	1	
	ER6292-4-20	• • HOSE ASSEMBLY (WH)	1	
- 10	R88T2651-230	• TRANSMITTER, HYDRAULIC PRESSURE, GFP	2	
		ATTACHING PARTS		
	AN515C6-6	• SCREW	8	
	AN960D6	• WASHER	8	
		¤-----¤-¤-¤-----¤		
- 11	25-69210- 1	• BRACKET ASSEMBLY, PRESSURE TRANSMITTER	1	
	AN8008D1	• • INSULATOR, VIBRATION	4	
- 12	25-69208- 9	• TUBE ASSEMBLY, LH BRAKE OPERATE	1	
- 13	25-69361- 37	• TUBE ASSEMBLY, LH BRAKE OPERATE	1	
- 14	25-69360-105	• TUBE ASSEMBLY, LH BRAKE OPERATE	1	
- 15	25-69362- 59	• TUBE ASSEMBLY, LH BRAKE OPERATE	1	
- 16	25-69208- 7	• TUBE ASSEMBLY, RH BRAKE OPERATE	1	
- 17	25-69359- 55	• TUBE ASSEMBLY, UTILITY SUCTION	1	
- 18	150S1-12D	• COUPLING, HALF (AQ)	1	
	155-25-12	• NUT (AQ) USE WITH INDEX 18	1	
- 19	25-69363- 1	• HOSE ASSEMBLY, UTILITY PRESSURE	1	
	881-12S	• • FITTING (AQ)	2	
- 20	140S1-16D	• COUPLING, HALF (AQ)	1	
	145-25-16	• NUT (AQ) USE WITH INDEX 20	1	
- 21	25-69195- 81	• HOSE ASSEMBLY, UTILITY SUCTION	1	
	MS28741-16-0262	• • HOSE ASSEMBLY	1	
- 22	25-69208- 5	• TUBE ASSEMBLY, POWER CONTROL RESERVOIR SCUPPER DRAIN	1	
- 23	25-69208- 3	• TUBE ASSEMBLY, POWER CONTROL RESERVOIR SCUPPER DRAIN	1	
- 24	25-69208- 15	• TUBE ASSEMBLY, POWER CONTROL RESERVOIR DRAIN	1	
- 25	25-69327- 7	• TUBE ASSEMBLY, UTILITY PRESSURE	1	
- 26	155S4-6D	• COUPLING, HALF (AQ)	2	
		ATTACHING PARTS		
	AN3-4A	• BOLT	12	
	AN960D10L	• WASHER	12	
	AN365-1032	• NUT	12	
		¤-----¤-¤-¤-----¤		
- 27	25-69360- 3	• TUBE ASSEMBLY, UTILITY SCAVENGE	1	
- 28	25-69361- 97	• TUBE ASSEMBLY, UTILITY SCAVENGE	1	
- 29	25-69362-105	• TUBE ASSEMBLY, UTILITY SCAVENGE	1	
- 30	25-69362- 69	• TUBE ASSEMBLY, POWER CONTROL SCAVENGE	1	
- 31	25-69362-101	• TUBE ASSEMBLY, POWER CONTROL SCAVENGE	1	
- 32	25-69359-101	• TUBE ASSEMBLY, LANDING GEAR UP	1	
- 33	25-69360- 97	• TUBE ASSEMBLY, LANDING GEAR UP	1	
- 34	25-69360-103	• TUBE ASSEMBLY, LANDING GEAR UP	1	
- 35	25-69359- 97	• TUBE ASSEMBLY, LANDING GEAR DOWN	1	
- 36	25-69360- 99	• TUBE ASSEMBLY, LANDING GEAR DOWN	1	
- 37	25-69360-101	• TUBE ASSEMBLY, LANDING GEAR DOWN	1	
- 38	145S4-16D	• COUPLING, HALF (AQ)	1	
		ATTACHING PARTS		
	AN3-4A	• BOLT	6	
	AN960D10L	• WASHER	6	
	AN365-1032	• NUT	6	
		¤-----¤-¤-¤-----¤		
- 39	25-69361- 43	• TUBE ASSEMBLY, POWER CONTROL SUCTION	1	
- 40	25-69208-117	• TUBE ASSEMBLY, POWER CONTROL SUCTION	1	
- 41	25-69062- 89	• TUBE ASSEMBLY, POWER CONTROL SUCTION	1	

Center Fuselage

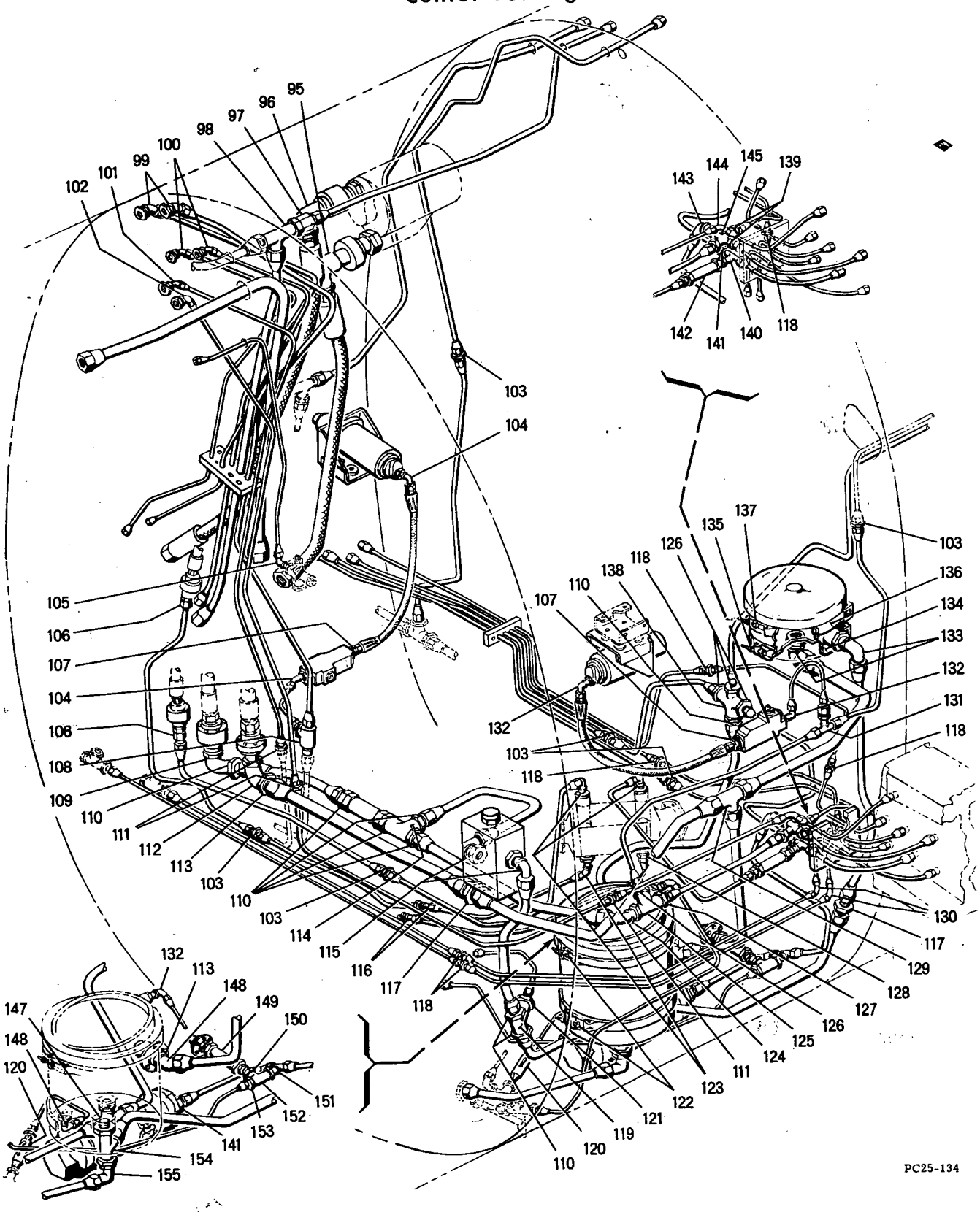

Figure 131 -- Center Fuselage Hydraulic Installation
(Engine Accessories Compartment, Upper and Left Side) (Sheet 2 of 2)

FIGURE & INDEX NUMBER	PART NUMBER	1 2 3 4 5 6 7 DESCRIPTION	UNITS PER ASS'Y	USABLE ON CODE
131 - 42	25-69208- 77	• TUBE ASSEMBLY, POWER CONTROL SUCTION	1	
- 43	145S7-16	• CAP, DUST (AQ)	1	
- 44	145S4-16D	• COUPLING, HALF (AQ)	1	
		ATTACHING PARTS		
	AN3-4A	• BOLT	6	
	AN960D10L	• WASHER	6	
	AN365-1032	• NUT	6	
		¤----¤-¤-¤----¤		
- 45	155S4-12D	• COUPLING, HALF (AQ)	1	
		ATTACHING PARTS		
	AN3-4A	• BOLT	6	
	AN960D10L	• WASHER	6	
	AN365-1032	• NUT	6	
		¤----¤-¤-¤----¤		
- 46	25-69361- 45	• TUBE ASSEMBLY, POWER CONTROL PRESSURE	1	
- 47	AN6280-12	• VALVE, CHECK	1	
	AN6290-12	• GASKET, USE WITH INDEX 47	1	
- 48	25-69361- 35	• TUBE ASSEMBLY, POWER CONTROL PRESSURE	1	
- 49	25-69361- 39	• TUBE ASSEMBLY, POWER CONTROL PRESSURE	1	
- 50	25-69208- 43	• TUBE ASSEMBLY, POWER CONTROL PRESSURE	1	
- 51	25-69208- 41	• TUBE ASSEMBLY, POWER CONTROL PRESSURE	1	
- 52	25-69208- 45	• TUBE ASSEMBLY, POWER CONTROL PRESSURE	1	
- 53	4860-2	• FUSE, HYDRAULIC PRESSURE GAGE (WAH)	1	
		ATTACHING PARTS		
	NAS229-29	• SCREW	2	
	AN960D10L	• WASHER	2	
	AN960D10	• WASHER	2	
	AN364-1032	• NUT	2	
		¤----¤-¤-¤----¤		
- 54	25-69195-141	• HOSE ASSEMBLY, POWER CONTROL PRESSURE	1	
	ER6292-4-15.25	• • HOSE ASSEMBLY (WH)	1	
- 55	25-69210- 5	• BRACKET ASSEMBLY, PRESSURE TRANSMITTER	1	
	AN8008D1	• • INSULATOR, VIBRATION	4	
- 56	25-69359- 29	• TUBE ASSEMBLY, POWER CONTROL PRESSURE	1	
- 57	25-69360-117	• TUBE ASSEMBLY, AILERON PRESSURE	1	
- 58	25-69361-101	• TUBE ASSEMBLY, POWER CONTROL PRESSURE	1	
- 59	25-69360- 91	• TUBE ASSEMBLY, POWER CONTROL PRESSURE	1	
- 60	25-69361- 73	• TUBE ASSEMBLY, POWER CONTROL PRESSURE	1	
- 61	25-69208- 79	• TUBE ASSEMBLY, POWER CONTROL PRESSURE	1	
- 62	1356-512465	• ACCUMULATOR (PA)	1	
	25-69262- 5	• SUPPORT ASSEMBLY, ACCUMULATOR	2	
- 63	16946-10	• • STRAP ASSY (MAR)	1	
- 64	16946-12	• • STRAP ASSY (MAR)	1	
- 65	155S4-8D	• COUPLING, HALF (AQ)	1	
		ATTACHING PARTS		
	AN3-4A	• BOLT	6	
	AN960D10L	• WASHER	6	
	AN365-1032	• NUT	6	
		¤----¤-¤-¤----¤		
	155S7-8	• CAP, DUST (AQ) USE WITH INDEX 65	1	
- 66	25-69208- 93	• TUBE ASSEMBLY, POWER CONTROL PRESSURE	1	
- 67	25-69208- 25	• TUBE ASSEMBLY, POWER CONTROL RETURN	1	
- 68	25-69362- 19	• TUBE ASSEMBLY, POWER CONTROL RETURN	1	
- 69	25-69362- 31	• TUBE ASSEMBLY, POWER CONTROL RETURN	1	
- 70	25-69361- 41	• TUBE ASSEMBLY, POWER CONTROL RETURN	1	
- 71	AN6279-12CD	• VALVE, PRESS, RELIEF	1	
		ATTACHING PARTS		
	AN3-30A	• BOLT	3	
	AN960D10L	• WASHER	3	
		¤----¤-¤-¤----¤		
- 72	25-69362- 17	• TUBE ASSEMBLY, POWER CONTROL RETURN	1	
- 73	25-69361-103	• TUBE ASSEMBLY, AILERON RETURN	1	
- 74	25-69360- 95	• TUBE ASSEMBLY, AILERON RETURN	1	
- 75	25-69360-119	• TUBE ASSEMBLY, POWER CONTROL RETURN	1	
- 76	25-69327- 27	• TUBE ASSEMBLY, POWER CONTROL SCAVENGE RETURN	1	
- 77	25-69360-115	• TUBE ASSEMBLY, AILERON RETURN	1	
- 78	25-69362-107	• TUBE ASSEMBLY, SCAVENGE RETURN	1	
- 79	25-69360-111	• TUBE ASSY, FLAP DOWN	1	
- 80	25-69361-107	• TUBE ASSY, FLAP DOWN	1	
- 81	25-69360- 87	• TUBE ASSY, FLAP DOWN	1	
- 82	25-69360-109	• TUBE ASSY, FLAP UP	1	
- 83	25-69361-105	• TUBE ASSY, FLAP UP	1	
- 84	25-69360- 89	• TUBE ASSY, FLAP UP	1	
- 85	25-69361-117	• TUBE ASSEMBLY, POWER CONTROL SUCTION	1	

FIGURE & INDEX NUMBER	PART NUMBER	1 2 3 4 5 6 7 DESCRIPTION	UNITS PER ASS'Y	USABLE ON CODE
131 - 86	25-69208- 95	• TUBE ASSEMBLY, POWER CONTROL SUCTION	1	
- 87	25-69062- 85	• TUBE ASSEMBLY, POWER CONTROL SUCTION	1	
- 88	25-69254-301	• FILTER ASSEMBLY, HYDRAULIC SYS, SEE FIG. 134	1	
- 89	25-69036- 1	• RESERVOIR ASSEMBLY, POWER CONTROL HYD SYSTEM, SEE FIG. 134	1	A
	25-69036-301	• RESERVOIR ASSEMBLY, POWER CONTROL HYD SYSTEM, SEE FIG. 134	1	B-F
- 90	25-69310- 1	• BLOCK ASSEMBLY, HYDRAULIC LINE SUPPORT	1	
		ATTACHING PARTS		
	AN3-26A	• BOLT	2	
	AN960D10L	• WASHER	2	
		¤-----¤-¤-¤-----¤		
- 91	25-69313- 1	• BLOCK ASSEMBLY, HYDRAULIC LINE SUPPORT	1	
		ATTACHING PARTS		
	AN3-14A	• BOLT	2	
	AN960D10L	• WASHER	2	
		¤-----¤-¤-¤-----¤		
- 92	25-69314- 1	• BLOCK ASSEMBLY, HYDRAULIC LINE SUPPORT	1	
		ATTACHING PARTS		
	AN3-34A	• BOLT	2	
	AN960D10L	• WASHER	2	
		¤-----¤-¤-¤-----¤		
- 93	25-69327- 9	• TUBE ASSEMBLY, UTILITY CONTROL PRESSURE	1	
- 94	25-69208- 37	• TUBE ASSEMBLY, UTILITY CONTROL PRESSURE	1	
- 95	AN939D16	• ELBOW	1	
	AN6290-16	• GASKET, USE WITH INDEX 95	2	
	AN815-16D	• UNION, USE WITH INDEX 95	1	
- 96	AN939-12	• ELBOW	1	
	AN6290-12	• GASKET, USE WITH INDEX 96	2	
	AN815-12D	• UNION, USE WITH INDEX 96	1	
- 97	MS21915D12-8	• BUSHING	1	
- 98	MS21912D12	• TEE	1	
	AN6289D12	• NUT, USE WITH INDEX 98	1	
	AN6291-12	• RING, BACK UP, USE WITH INDEX 98	1	
	AN6290-12	• GASKET, USE WITH INDEX 98	1	
- 99	MS21907D8	• ELBOW	2	
	AN924-8D	• NUT, USE WITH INDEX 99	2	
	AN960D1216	• WASHER, USE WITH INDEX 99	2	
-100	MS21907D4	• ELBOW	2	
	AN924-4D	• NUT, USE WITH INDEX 100	2	
	AN960D716	• WASHER, USE WITH INDEX 100	2	
-101	MS21908D5	• ELBOW	1	
	AN924-5D	• NUT, USE WITH INDEX 101	1	
	AN960D816	• WASHER, USE WITH INDEX 101	1	
-102	MS21907D5	• ELBOW	1	
	AN924-5D	• NUT, USE WITH INDEX 102	1	
	AN960D816	• WASHER, USE WITH INDEX 102	1	
-103	MS21902D6	• UNION	6	
-104	MS21907D4	• ELBOW	2	
	AN6289D4	• NUT, USE WITH INDEX 104	2	
	AN6291-4	• RING, BACK UP, USE WITH INDEX 104	2	
	AN6290-4	• GASKET, USE WITH INDEX 104	2	
-105	MS21908D4	• ELBOW	1	
	AN6290-4	• GASKET, USE WITH INDEX 105	1	
	AN6291-4	• RING, BACK UP, USE WITH INDEX 105	1	
	AN6289D4	• NUT, USE WITH INDEX 105	1	
	AN893-3D	• BUSHING, USE WITH INDEX 105	1	
-106	ER894D6-6	• BUSHING (WH)	2	
	AN6289D6	• NUT, USE WITH INDEX 106	2	
	AN6291-6	• RING, BACK UP, USE WITH INDEX 106	2	
	AN6290-6	• GASKET, USE WITH INDEX 106	2	
-107	MS21902D4	• UNION	2	
	AN6290-4	• GASKET, USE WITH INDEX 107	2	
-108	MS21910D8	• TEE	1	
	MS21916D8-4	• REDUCER, USE WITH INDEX 108	1	
	AN6290-8	• GASKET, USE WITH INDEX 108	1	
-109	AN939-12	• ELBOW	1	
	AN6289D12	• NUT, USE WITH INDEX 109	1	
	AN6291-12	• RING, BACK UP, USE WITH INDEX 109	1	
	AN6290-12	• GASKET, USE WITH INDEX 109	1	
-110	MS21902D12	• UNION	8	
	AN6290-12	• GASKET, USE WITH INDEX 110	8	
-111	MS21902D5	• UNION	3	
-112	AN939D16	• ELBOW	1	
	AN6289D16	• NUT, USE WITH INDEX 112	1	
	AN6291-6	• RING, BACK UP, USE WITH INDEX 112	1	

FIGURE & INDEX NUMBER	PART NUMBER	1 2 3 4 5 6 7 DESCRIPTION	UNITS PER ASS'Y	USABLE ON CODE
131 -	AN6290-16	• GASKET, USE WITH INDEX 112	1	
-113	MS21902D16	• UNION	2	
	AN6290-16	• GASKET, USE WITH INDEX 113	2	
-114	AN938-12	• TEE	1	
-115	MS21908D12	• ELBOW	2	
	AN6289D12	• NUT, USE WITH INDEX 115	2	
	AN6291-12	• RING, BACK UP, USE WITH INDEX 115	2	
	AN6290-12	• GASKET, USE WITH INDEX 115	2	
-116	MS21907D6	• ELBOW	2	
	AN924-6D	• NUT, USE WITH INDEX 116	2	
-117	MS21902D16	• UNION	2	
-118	MS21902D4	• UNION	6	
-119	AN938D12	• TEE	1	
-120	AF765-10	• DRAIN COCK	1	
	ER816-4D	• UNION (WH) USE WITH INDEX 120	2	
-121	MS21916D12-5	• REDUCER	1	
	AN6290-12	• GASKET, USE WITH INDEX 121	1	
-122	1046	• CLAMP (NUCA)	2	
-123	MS21908D6	• ELBOW	3	
	AN6289D6	• NUT, USE WITH INDEX 123	3	
	AN6291-6	• RING, BACK UP, USE WITH INDEX 123	3	
	AN6290-6	• GASKET, USE WITH INDEX 123	3	
-124	MS21907D12	• ELBOW	1	
	AN6289D12	• NUT, USE WITH INDEX 124	1	
	AN6291-12	• RING, BACK UP, USE WITH INDEX 124	1	
	AN6290-12	• GASKET, USE WITH INDEX 124	1	
-125	AN938-12	• TEE	1	
-126	MS21916D12-6	• REDUCER	4	
	AN6290-12	• GASKET, USE WITH INDEX 126	4	
-127	MS21916D12-8	• REDUCER	1	
	AN6290-12	• GASKET, USE WITH INDEX 127	1	
-128	MS21902D6	• UNION	1	
	AN6290-6	• GASKET, USE WITH INDEX 128	1	
-129	MS21905D16	• TEE	1	
-130	MS21904D4	• ELBOW	2	
-131	MS21909D6	• TEE	1	
	MS21915D6-4	• BUSHING, USE WITH INDEX 131	1	
	AN6289D6	• NUT, USE WITH INDEX 131	1	
	AN6291-6	• RING, BACK UP, USE WITH INDEX 131	1	
	AN6290-6	• GASKET, USE WITH INDEX 131	1	
-132	MS21908D4	• ELBOW	3	
	AN6289D4	• NUT, USED WITH INDEX 132	3	
	AN6291-4	• RING, BACK UP, USE WITH INDEX 132	3	
	AN6290-4	• GASKET, USE WITH INDEX 132	3	
-133	MS21908D16	• ELBOW	2	
	AN6289D16	• NUT, USE WITH INDEX 133	2	
	AN6291-16	• RING, BACK UP, USE WITH INDEX 133	2	
	AN6290-16	• GASKET, USE WITH INDEX 133	2	
	25-69318- 1	• BRACKET ASSY, HYD POWER CONTROL RESERVOIR FILTER LOWER	1	
-134	16893-12	• • CLAMP ASSY (MAR)	1	
-135	16893-10	• • CLAMP ASSY (MAR)	1	
	25-69317- 1	• BRACKET ASSY, HYD POWER CONTROL RESERVOIR FILTER UPPER	1	
-136	16893-12	• • CLAMP ASSY (MAR)	1	
-137	16893-10	• • CLAMP ASSY (MAR)	1	
-138	AN937D12	• CROSS	1	
-139	MS21916D8-6	• REDUCER	2	
	AN6290-8	• GASKET, USE WITH INDEX 139	2	
-140	MS21909D6	• TEE	1	
	AN6289D6	• NUT, USE WITH INDEX 140	1	
	AN6291-6	• RING, BACK UP, USE WITH INDEX 140	1	
	AN6290-6	• GASKET, USE WITH INDEX 140	1	
-141	MS21902D8	• UNION	2	
	AN6290-8	• GASKET, USE WITH INDEX 141	2	
-142	AN6280-6	• VALVE, CHECK	1	
	MS21902D6	• UNION, USE WITH INDEX 142	1	
	AN6290-6	• GASKET, USE WITH INDEX 142	1	
-143	MS21908D8	• ELBOW	1	
	AN6289D8	• NUT, USE WITH INDEX 143	1	
	AN6291-8	• RING, BACK UP, USE WITH INDEX 143	1	
	AN6290-8	• GASKET, USE WITH INDEX 143	1	
-144	MS21904D5	• ELBOW	1	
-145	AN937D8	• CROSS	1	
-146	MS21908D4	• ELBOW	1	
	AN6290-4	• GASKET, USE WITH INDEX 146	1	
	AN6291-4	• RING, BACK UP, USE WITH INDEX 146	1	
	AN6289D4	• NUT, USE WITH INDEX 146	1	

FIGURE & INDEX NUMBER	PART NUMBER	1 2 3 4 5 6 7 DESCRIPTION	UNITS PER ASS'Y	USABLE ON CODE
131 -147	MS21909D12	• TEE	1	
	AN6289D12	• NUT, USE WITH INDEX 147	1	
	AN6291-12	• RING, BACK UP, USE WITH INDEX 147	1	
	AN6290-12	• GASKET, USE WITH INDEX 147	1	
-148	AN941D16	• ELBOW	1	
	AN6290-16	• GASKET, USE WITH INDEX 148	1	
-148	AN6291-16	• RING, BACK UP, USE WITH INDEX 148	1	
	AN6289D16	• NUT, USE WITH INDEX 148	1	
-149	AN6280-8	• VALVE, CHECK	1	
	AN6289D8	• NUT, USE WITH INDEX 149	1	
	AN6291-8	• RING, BACK UP, USE WITH INDEX 149	1	
	AN6290-8	• GASKET, USE WITH INDEX 149	1	
-150	MS21903D8	• UNION	1	
	AN6289D8	• NUT, USE WITH INDEX 150	1	
	AN6291-8	• RING, BACK UP, USE WITH INDEX 150	1	
	AN6290-8	• GASKET, USE WITH INDEX 150	2	
-151	MS21909D8	• TEE	1	
	AN6289D8	• NUT, USE WITH INDEX 151	1	
	AN6291-8	• RING, BACK UP, USE WITH INDEX 151	1	
	AN6290-8	• GASKET, USE WITH INDEX 151	1	
-152	AN938D8	• TEE	1	
-153	MS21916D8-5	• REDUCER	1	
	AN6290-8	• GASKET, USE WITH INDEX 153	1	
-154	MS21911D16	• TEE	1	
	AN893-20D	• BUSHING, USE WITH INDEX 154	1	
	AN6289D16	• NUT, USE WITH INDEX 154	1	
	AN6291-16	• RING, BACK UP, USE WITH INDEX 154	1	
	AN6290-16	• GASKET, USE WITH INDEX 154	2	
-155	MS21908D10	• ELBOW	1	
	AN6289D10	• NUT, USE WITH INDEX 155	1	
	AN6291-10	• RING, BACK UP, USE WITH INDEX 155	1	
	AN6290-10	• GASKET, USE WITH INDEX 155	1	

FIGURE & INDEX NUMBER	PART NUMBER	1 2 3 4 5 6 7 DESCRIPTION	UNITS PER ASS'Y	USABLE ON CODE
132 -	25-69099- 1	HYDRAULIC INSTL, CENTER FUSELAGE ENGINE ACCESSORIES COMPARTMENT, LOWER RIGHT SIDE, SEE FIG. 106-27 FOR NEXT HIGHER ASSEMBLY	REF	A
	25-69099-301	HYDRAULIC INSTL, CENTER FUSELAGE ENGINE ACCESSORIES COMPARTMENT, LOWER RIGHT SIDE, SEE FIG. 106-27 FOR NEXT HIGHER ASSEMBLY	REF	B
- 1	25-69062- 43	. TUBE ASSEMBLY, UTILITY PRESSURE	1	
- 2	AN6280-4	. VALVE, CHECK	1	
- 3	25-69327- 15	. TUBE ASSEMBLY, UTILITY PRESSURE	1	
- 4	AV14B1124	. VALVE, HYD SEL SOLENOID (GCO) MCDONNELL SPEC 25-69008-58	1	
		ATTACHING PARTS		
- 5	AN4-5A	. BOLT	4	
		¤----¤-¤-¤----¤		
- 6	25-69327- 17	. TUBE ASSEMBLY, FLAP UP	1	
- 7	25-69327- 11	. TUBE ASSEMBLY, FLAP UP	1	
- 8	25-69360- 85	. TUBE ASSEMBLY, FLAP UP	1	
- 9	25-69062- 87	. TUBE ASSY, FLAP DOWN	1	
- 10	25-69327- 19	. TUBE ASSY, FLAP DOWN	1	
- 11	25-69062- 91	. TUBE ASSY, FLAP DOWN	1	
- 12	25-69360- 83	. TUBE ASSY, FLAP DOWN	1	
- 13	25-69327- 13	. TUBE ASSEMBLY, UTILITY RETURN	1	
- 14	MS28016B4	. VALVE, RELIEF	1	
		ATTACHING PARTS		
	AN3-13A	. BOLT, FORWARD	1	
	AN3-14A	. BOLT, AFT	1	
	AN960D10L	. WASHER	2	
		¤----¤-¤-¤----¤		
- 15	25-69327- 21	. TUBE ASSEMBLY, UTILITY RETURN	1	
- 16	25-69195-167	. HOSE ASSEMBLY, UTILITY RETURN	1	
	ER6271-6-19.50	. . HOSE ASSEMBLY (WH)	1	
- 17	25-69195- 79	. HOSE ASSEMBLY, UTILITY RETURN	1	
	ER6271-4-9.25	. . HOSE ASSEMBLY (WH)	1	
- 18	25-69062- 39	. TUBE ASSEMBLY, UTILITY PRESSURE	1	
- 19	25-69062- 37	. TUBE ASSEMBLY, UTILITY PRESSURE	1	
- 20	25-69195-163	. HOSE ASSEMBLY, UTILITY PRESSURE	1	
	ER6292-4-17.50	. . HOSE ASSEMBLY (WH)	1	
- 21	1107-4-2.0	. REGULATOR, FLOW (WAEC)	1	
- 22	25-69195-161	. HOSE ASSEMBLY, UTILITY PRESSURE	1	
	ER6292-4-23.25	. . HOSE ASSEMBLY (WH)	1	
- 23	AV14F1105	. VALVE, PILOT OPERATED AIR COMPRESSOR SHUTOFF (GCO)	1	
		ATTACHING PARTS		
	NAS229-9	. SCREW	4	
	AN960D10	. WASHER	4	
		¤----¤-¤-¤----¤		
- 24	25-69062- 35	. TUBE ASSEMBLY, UTILITY RETURN	1	
- 25	25-69062- 47	. TUBE ASSEMBLY, UTILITY RETURN	1	
- 26	25-69208-113	. TUBE ASSEMBLY, UTILITY RETURN	1	
- 27	25-69062- 53	. TUBE ASSEMBLY, UTILITY PRESSURE	1	
- 28	25-69360- 69	. TUBE ASSEMBLY, UTILITY PRESSURE	1	
- 29	157-01-000	. VALVE, PRESS. OPERATED HYDRAULIC SHUTOFF (SELB) MCDONNELL SPEC 25-69048-1	1	
		ATTACHING PARTS		
	AN4-20A	. BOLT	2	
	AN960D416L	. WASHER	2	
		¤----¤-¤-¤----¤		
- 30	25-69360- 9	. TUBE ASSEMBLY, POWER CONTROL PRESSURE	1	
- 31	25-69360- 45	. TUBE ASSEMBLY, AILERON PRESSURE	1	
- 32	25-69359-115	. TUBE ASSEMBLY, UTILITY PRESSURE	1	
- 33	25-69359-113	. TUBE ASSEMBLY, UTILITY PRESSURE	1	
- 34	AN6280-12	. VALVE, CHECK	1	
- 35	25-69359-111	. TUBE ASSEMBLY, UTILITY PRESSURE	1	
- 36	AN6279-12CD	. VALVE, PRESS. RELIEF	1	
		ATTACHING PARTS		
	AN3-30A	. BOLT	3	
	AN960D10L	. WASHER	3	
		¤----¤-¤-¤----¤		
- 37	25-69360- 49	. TUBE ASSEMBLY, UTILITY RETURN	1	
- 38	25-69360- 51	. TUBE ASSEMBLY, UTILITY RETURN	1	
- 39	25-69327- 29	. TUBE ASSEMBLY, SCAVENGE RETURN	1	
- 40	AN6280-6	. VALVE, CHECK	1	
	MS21902D6	. UNION, USE WITH INDEX 40	2	
	AN6290-6	. GASKET, USE WITH INDEX 40	2	

Center Fuselage

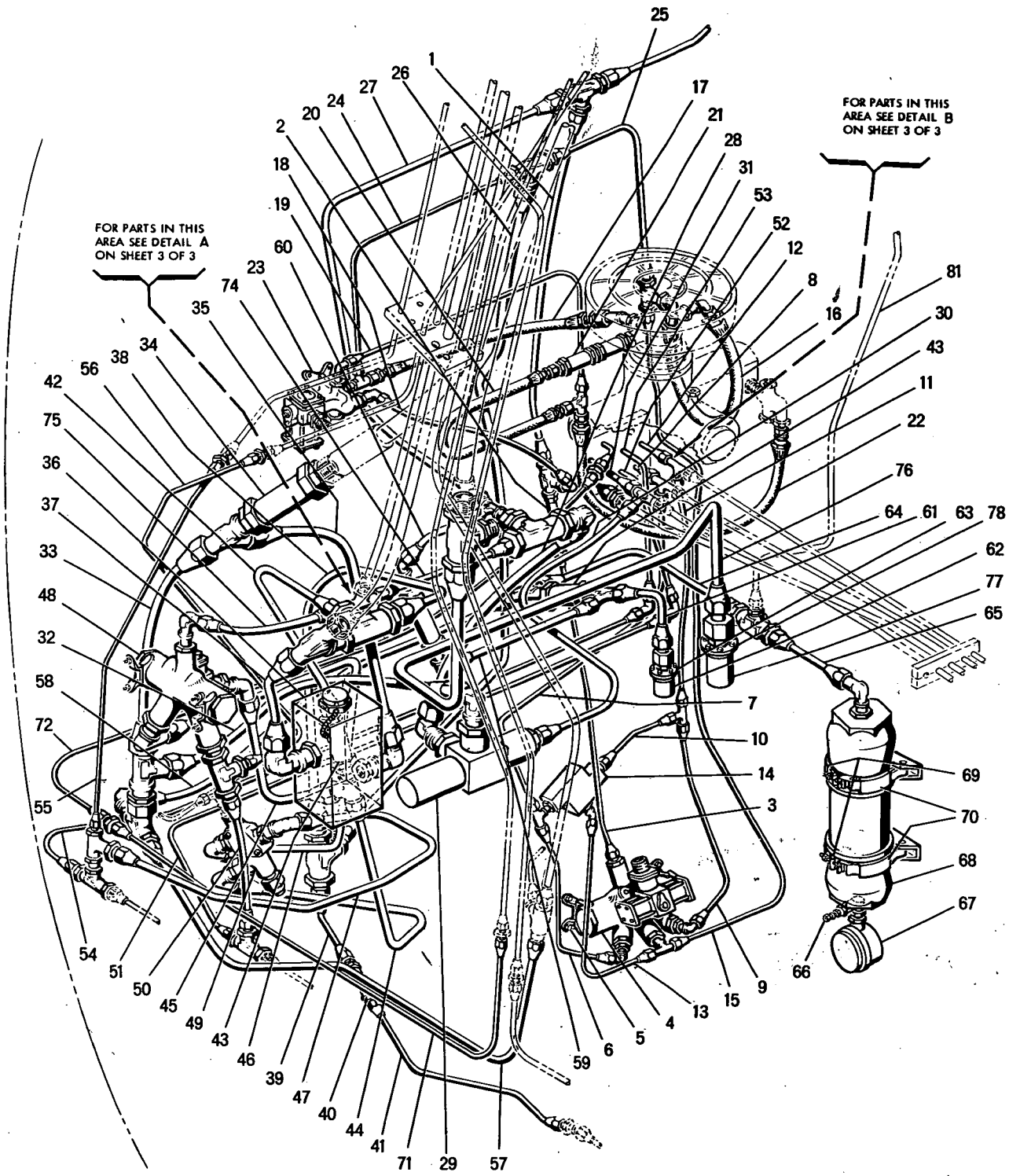

PC25-135

Figure 132 -- Center Fuselage Hydraulic Installation
(Engine Accessories Compartment, Lower Right Side) (Sheet 1 of 3)

FIGURE & INDEX NUMBER	PART NUMBER	1 2 3 4 5 6 7 DESCRIPTION	UNITS PER ASS'Y	USABLE ON CODE
132 - 41	25-69327- 31	• TUBE ASSEMBLY, UTILITY SCAVENGE RETURN	1	
- 42	25-69208-101	• TUBE ASSEMBLY, UTILITY RETURN	1	
- 43	AN6280-8	• VALVE, CHECK	3	
- 44	25-69208-115	• TUBE ASSEMBLY, UTILITY RETURN	1	
- 45	25-69208-107	• TUBE ASSEMBLY, UTILITY RETURN	1	
- 46	25-69208-111	• TUBE ASSY, LG UP	1	
- 47	25-69208-103	• TUBE ASSY, LG UP	1	
- 48	AV14C1138	• VALVE, HYD SEL SOLENOID (GCO) MCDONNELL SPEC 25-69008-38	1	
		ATTACHING PARTS		
	AN4-3A	• BOLT	4	
	AN960-416	• WASHER	4	
		¤----¤-¤-¤----¤		
- 49	863-1	• VALVE, SELECTOR (ELE) MCDONNELL SPEC 20-91012-3	1	
		ATTACHING PARTS		
	AN3-25A	• BOLT	2	
	AN960D10L	• WASHER	2	
	NAS43DD3-44	• SPACER	2	
		¤----¤-¤-¤----¤		
- 50	25-69359- 93	• TUBE ASSY, LG DOWN	1	
- 51	25-69359- 95	• TUBE ASSY, LG DOWN	1	
- 52	25-69360- 75	• TUBE ASSY, LG DOWN	1	
- 53	25-69360- 77	• TUBE ASSY, LG UP	1	
- 54	25-69359-103	• TUBE ASSY, LG UP	1	
- 55	25-69208- 99	• TUBE ASSY, LG UP	1	
- 56	25-69362- 29	• TUBE ASSY, LG DOWN	1	
- 57	25-69359- 91	• TUBE ASSEMBLY, AILERON PRESSURE	1	
- 58	25-69360- 53	• TUBE ASSEMBLY, UTILITY PRESSURE	1	
- 59	25-69360- 73	• TUBE ASSEMBLY, UTILITY PRESSURE	1	
- 60	25-69360- 71	• TUBE ASSEMBLY, UTILITY PRESSURE	1	
- 61	25-69360- 59	• TUBE ASSEMBLY, UTILITY PRESSURE	1	
- 62	155S7-8	• CAP, DUST (AQ)	1	
- 63	155S4-8D	• COUPLING, HALF (AQ)	1	
		ATTACHING PARTS		
	AN3-3A	• BOLT	6	
	AN365-1032	• NUT	6	
		¤----¤-¤-¤----¤		
- 64	25-69208- 33	• TUBE ASSEMBLY, UTILITY PRESSURE	1	
- 65	25-69208- 97	• TUBE ASSEMBLY, UTILITY PRESSURE	1	
- 66	AN6287-1	• VALVE, HIGH PRESSURE AIR	1	
- 67	AN5769-2A	• GAGE, HYD SYS PRESS.	1	
	AN6289D4	• NUT, USE WITH INDEX 67	1	
	AN6291-4	• RING, BACK UP, USE WITH INDEX 67	1	
	AN6290-4	• GASKET, USE WITH INDEX 67	1	
- 68	1356-512465	• ACCUMULATOR (PA)	1	
	25-69262- 1	• SUPPORT ASSEMBLY, ACCUMULATOR	2	
		ATTACHING PARTS		
	AN3-5A	• BOLT	4	
	AN960D10L	• WASHER	4	
		¤----¤-¤-¤----¤		
- 69	16946-10	• • STRAP ASSY (MAR)	1	
- 70	16946-12	• • STRAP ASSY (MAR)	1	
- 71	25-69362- 23	• TUBE ASSY, RH BRAKE	1	
- 72	25-69360- 17	• TUBE ASSY, RH BRAKE	1	
- 73	25-69362- 57	• TUBE ASSY, RH BRAKE	1	
- 74	25-69360- 57	• TUBE ASSEMBLY, UTILITY PRESSURE	1	
- 75	25-69360- 7	• TUBE ASSEMBLY, UTILITY PRESSURE	1	
- 76	25-69208- 85	• TUBE ASSEMBLY, UTILITY SUCTION	1	
- 77	145S7-16	• CAP, DUST (AQ)	1	
- 78	145S4-16D	• COUPLING, HALF (AQ)	1	
		ATTACHING PARTS		
	AN3-3A	• BOLT	6	
	AN365-1032	• NUT	6	
		¤----¤-¤-¤----¤		
- 79	25-69360- 93	• TUBE ASSEMBLY, AILERON RETURN	1	
- 80	25-69314- 1	• BLOCK ASSEMBLY, HYDRAULIC LINE SUPPORT	1	
		ATTACHING PARTS		
	AN3-34A	• BOLT	2	
	AN960D10L	• WASHER	2	
		¤----¤-¤-¤----¤		
- 81	25-69327- 9	• TUBE ASSEMBLY, UTILITY CONTROL PRESSURE, SEE FIG. 131-93	REF	

Center Fuselage

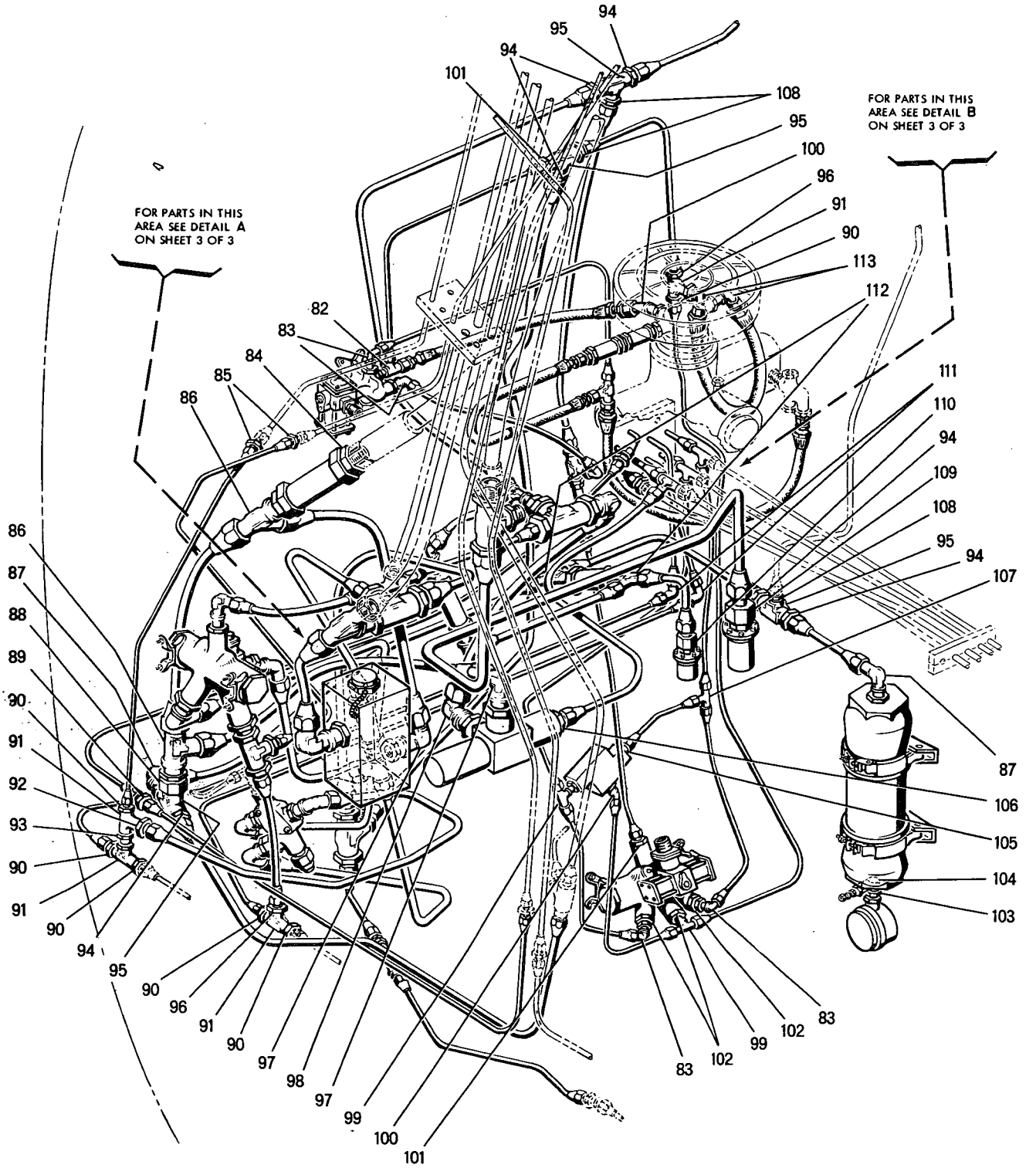

PC25-135

Figure 132 -- Center Fuselage Hydraulic Installation
(Engine Accessories Compartment, Lower Right Side) (Sheet 2 of 3)

FIGURE & INDEX NUMBER	PART NUMBER	1 2 3 4 5 6 7 DESCRIPTION	UNITS PER ASS'Y	USABLE ON CODE
132 - 82	MS21912D4	• TEE	1	
	AN6289D4	• NUT, USE WITH INDEX 82	1	
	AN6291-4	• RING, BACK UP, USE WITH INDEX 82	1	
	AN6290-4	• GASKET, USE WITH INDEX 82	1	
- 83	MS21908D4	• ELBOW	5	
	AN6289D4	• NUT, USE WITH INDEX 83	5	
	AN6291-4	• RING, BACK UP, USE WITH INDEX 83	5	
	AN6290-4	• GASKET, USE WITH INDEX 83	5	
- 84	AN815-12D	• UNION	1	
	AN6290-12	• GASKET, USE WITH INDEX 84	1	
- 85	MS21902D4	• UNION	3	
- 86	MS21912D12	• TEE	2	
	AN6289D12	• NUT, USE WITH INDEX 86	2	
	AN6291-12	• RING, BACK UP, USE WITH INDEX 86	2	
	AN6290-12	• GASKET, USE WITH INDEX 86	2	
- 87	MS21908D8	• ELBOW	8	
	AN6289D8	• NUT, USE WITH INDEX 87	8	
	AN6291-8	• RING, BACK UP, USE WITH INDEX 87	8	
	AN6290-8	• GASKET, USE WITH INDEX 87	8	
- 88	MS21915D12-8	• BUSHING	1	
	AN6290-8	• GASKET, USE WITH INDEX 88	1	
- 89	MS21902D5	• UNION	1	
- 90	MS21916D6-4	• REDUCER	6	
	AN6290-6	• GASKET, USE WITH INDEX 90	6	
- 91	AN938D6	• TEE	5	
- 92	MS21916D8-6	• REDUCER	1	
	AN6290-6	• GASKET, USE WITH INDEX 92	1	
- 93	MS21903D6	• UNION	1	
	AN6289D6	• NUT, USE WITH INDEX 93	1	
	AN6291-6	• RING, BACK UP, USE WITH INDEX 93	1	
	AN6290-6	• GASKET, USE WITH INDEX 93	2	
- 94	MS21902D8	• UNION	7	
	AN6290-8	• GASKET, USE WITH INDEX 94	7	
- 95	AN938D8	• TEE	5	
- 96	MS21902D6	• UNION	3	
	AN6290-6	• GASKET, USE WITH INDEX 96	3	
- 97	MS21908D12	• ELBOW	4	
	AN6289D12	• NUT, USE WITH INDEX 97	4	
	AN6291-12	• RING, BACK UP, USE WITH INDEX 97	4	
	AN6290-12	• GASKET, USE WITH INDEX 97	4	
- 98	MS21907D12	• ELBOW	1	
	AN6289D12	• NUT, USE WITH INDEX 98	1	
	AN6291-12	• RING, BACK UP, USE WITH INDEX 98	1	
	AN6290-12	• GASKET, USE WITH INDEX 98	1	
- 99	MS21909D4	• TEE	2	
	AN6289D4	• NUT, USE WITH INDEX 99	2	
	AN6291-4	• RING, BACK UP, USE WITH INDEX 99	2	
	AN6290-4	• GASKET, USE WITH INDEX 99	2	
-100	MS21907D4	• ELBOW	2	
	AN6289D4	• NUT, USE WITH INDEX 100	2	
	AN6291-4	• RING, BACK UP, USE WITH INDEX 100	2	
	AN6290-4	• GASKET, USE WITH INDEX 100	2	
-101	MS21916D8-4	• REDUCER	3	
	AN6290-8	• GASKET, USE WITH INDEX 101	3	
-102	AN893-3D	• BUSHING	3	
	AN6290-8	• GASKET, USE WITH INDEX 102	3	
-103	AN6285D2	• BOLT, AIR PRESSURE GAGE ADAPTER	1	
	AF47A1562	• PACKING, O RING, USE WITH INDEX 103	2	
-104	AN6285D1	• ADAPTER, AIR PRESSURE GAGE	1	
-105	MS21902D4	• UNION	3	
	AN6290-4	• GASKET, USE WITH INDEX 105	3	
-106	MS21916D6-4	• REDUCER	1	
	AN6290-4	• GASKET, USE WITH INDEX 106	1	
-107	MS21905D4	• TEE	4	
-108	MS21916D8-6	• REDUCER	4	
	AN6290-8	• GASKET, USE WITH INDEX 108	4	
-109	ER894D16-16	• BUSHING (WH)	1	
	AN6289D16	• NUT, USE WITH INDEX 109	1	
	AN6291-16	• RING, BACK UP, USE WITH INDEX 109	1	
	AN6290-16	• GASKET, USE WITH INDEX 109	1	
-110	ER894D8-8	• BUSHING (WH)	1	
	AN6289D8	• NUT, USE WITH INDEX 110	1	
	AN6291-8	• RING, BACK UP, USE WITH INDEX 110	1	
	AN6290-8	• GASKET, USE WITH INDEX 110	1	
-111	MS21904D4	• ELBOW	2	
-112	MS21909D8	• TEE	2	
	AN6289D8	• NUT, USE WITH INDEX 112	2	
	AN6291-8	• RING, BACK UP, USE WITH INDEX 112	2	
	AN6290-8	• GASKET, USE WITH INDEX 112	2	

Center Fuselage

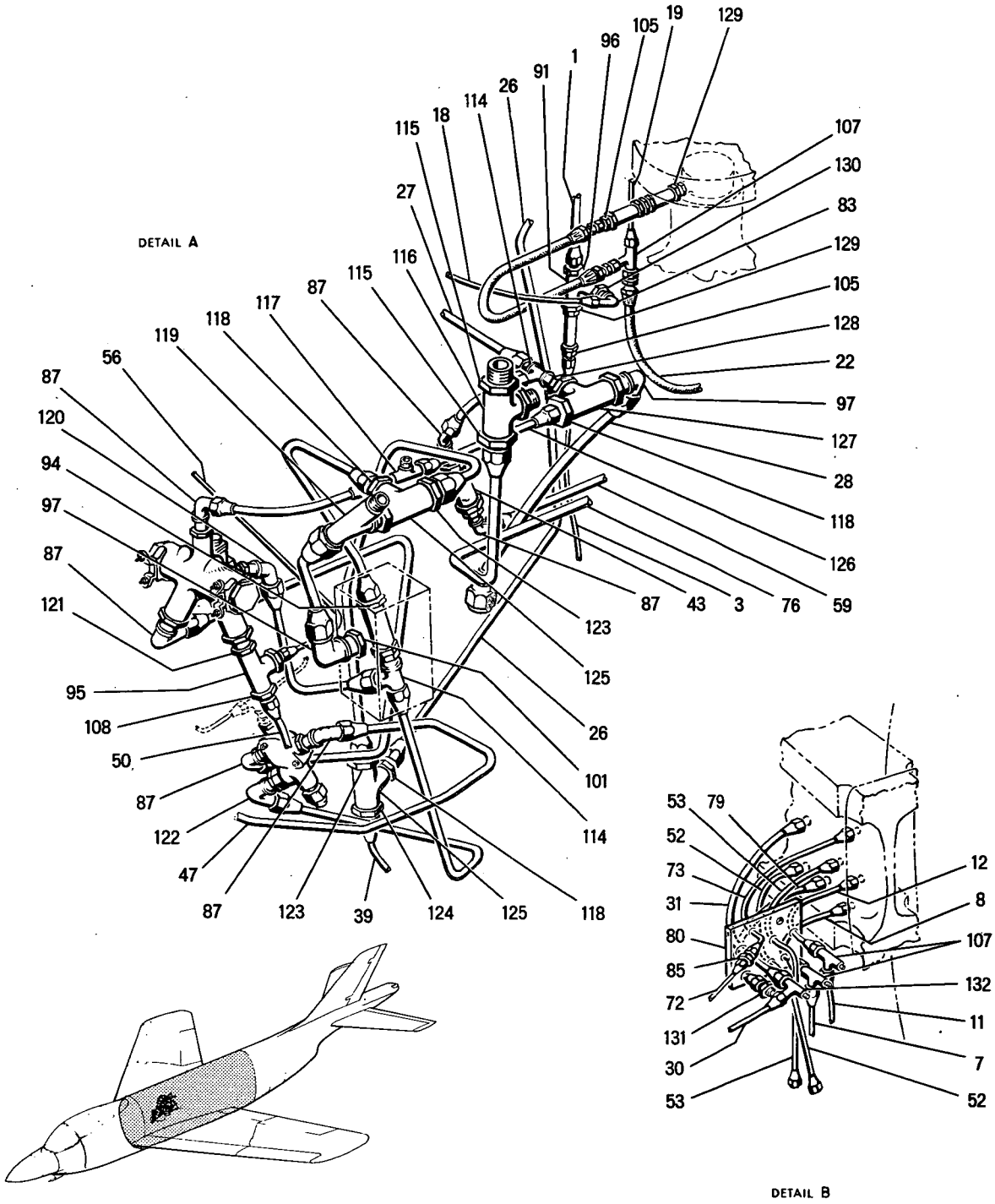

Figure 132 -- Center Fuselage Hydraulic Installation
(Engine Accessories Compartment, Lower Right Side) (Sheet 3 of 3)

FIGURE & INDEX NUMBER	PART NUMBER	1 2 3 4 5 6 7 DESCRIPTION	UNITS PER ASS'Y	USABLE ON CODE
132 -113	MS21908D6	• ELBOW	2	
	AN6289D6	• NUT, USE WITH INDEX 113	2	
	AN6291-6	• RING, BACK UP, USE WITH INDEX 113	2	
	AN6290-6	• GASKET, USE WITH INDEX 113	2	
-114	MS21912D8	• TEE	2	
	AN6289D8	• NUT, USE WITH INDEX 114	2	
	AN6291-8	• RING, BACK UP, USE WITH IN3EX 114	2	
	AN6290-8	• GASKET, USE WITH INDEX 114	2	
-115	MS21902D16	• UNION	2	
	AN6290-16	• GASKET, USE WITH INDEX 115	2	
-116	AN938D16	• TEE	1	
-117	MS21905D8	• TEE	1	
-118	MS21916D12-8	• REDUCER	3	
	AN6290-12	• GASKET, USE WITH INDEX 118	3	
-119	MS21909D12	• TEE	1	
	AN6289D12	• NUT, USE WITH INDEX 119	1	
	AN6291-12	• RING, BACK UP, USE WITH INDEX 119	1	
	AN6290-12	• GASKET, USE WITH INDEX 119	1	
-120	MS21907D8	• ELBOW	1	
	AN6289D8	• NUT, USE WITH INDEX 120	1	
	AN6291-8	• RING, BACK UP, USE WITH INDEX 120	1	
	AN6290-8	• GASKET, USE WITH INDEX 120	1	
-121	MS21903D8	• UNION	1	
	AN6289D8	• NUT, USE WITH INDEX 121	1	
	AN6291-8	• RING, BACK UP, USE WITH INDEX 121	1	
	AN6290-8	• GASKET, USE WITH INDEX 121	2	
-122	MS21908D8	• ELBOW	1	
	MS21915D8-6	• BUSHING, USE WITH INDEX 122	1	
	AN6289D8	• NUT, USE WITH INDEX 122	1	
	AN6291-8	• RING, BACK UP, USE WITH INDEX 122	1	
	AN6290-8	• GASKET, USE WITH INDEX 122	1	
	AN6290-6	• GASKET, USE WITH INDEX 122	1	
-123	MS21902D12	• UNION	2	
	AN6290-12	• GASKET, USE WITH INDEX 123	2	
-124	MS21916D12-6	• REDUCER	1	
	AN6290-12	• GASKET, USE WITH INDEX 124	1	
-125	AN938D12	• TEE	2	
-126	AN815-16D	• UNION	1	
	AN6290-16	• GASKET, USE WITH INDEX 126	1	
-127	AN938-12	• TEE	1	
-128	AN893-16D	• BUSHING	1	
	AN6290-12	• GASKET, USE WITH INDEX 128	1	
-129	MS21916D6-4	• REDUCER	2	
	AN6290-4	• GASKET, USE WITH INDEX 129	2	
	AN6290-6	• GASKET, USE WITH INDEX 129	2	
-130	AN893-2D	• BUSHING	1	
	AN6290-6	• GASKET, USE WITH INDEX 130	1	
-131	MS21902D6	• UNION	1	
-132	MS21905D6	• TEE	1	

Center Fuselage

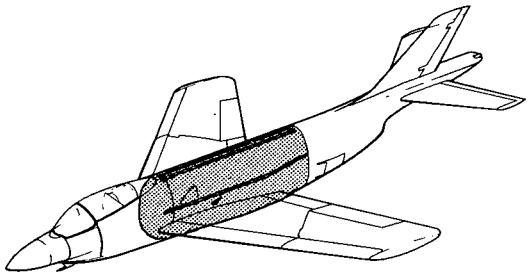

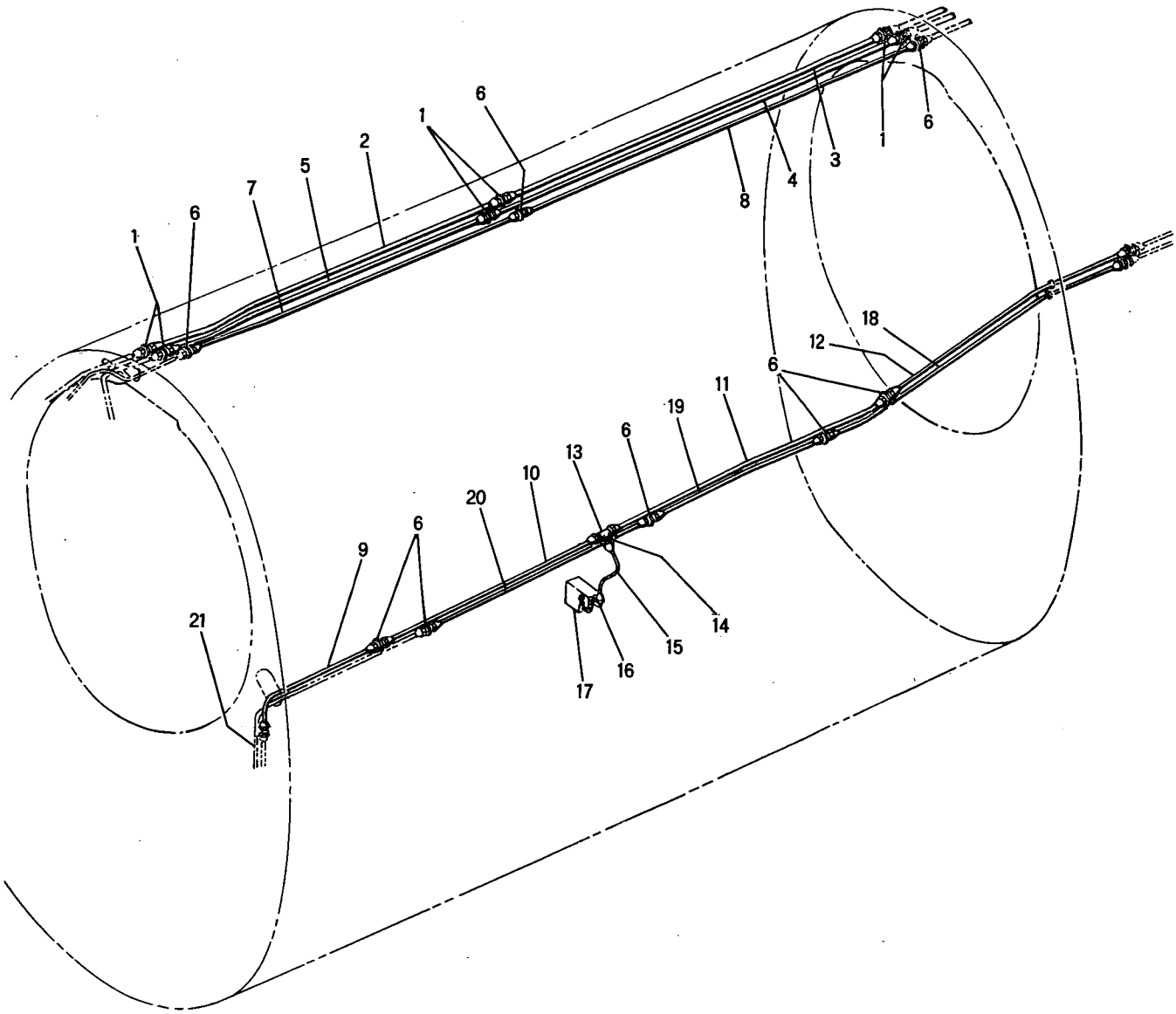

PC25-136

Figure 133 -- Center Fuselage Hydraulic Installation
(Fuselage Station 313.04 - To Fuselage Station 434.00)

FIGURE & INDEX NUMBER	PART NUMBER	1 2 3 4 5 6 7 DESCRIPTION	UNITS PER ASS'Y	USABLE ON CODE
133 -	25-69099- 1	HYDRAULIC INSTL, CENTER FUSELAGE, FUSELAGE STATION 313.04 TO FUSELAGE STATION 434.00, SEE FIG. 106-27 FOR NEXT HIGHER ASSEMBLY	REF	A
	25-69099-301	HYDRAULIC INSTL, CENTER FUSELAGE, FUSELAGE STATION 313.04 TO FUSELAGE STATION 434.00, SEE FIG. 106-27 FOR NEXT HIGHER ASSEMBLY	REF	B
- 1	MS21902D8	. UNION	6	
- 2	25-69361- 3	. TUBE ASSEMBLY, UTILITY PRESSURE	1	
- 3	25-69361- 7	. TUBE ASSEMBLY, UTILITY PRESSURE	1	
- 4	25-69361- 9	. TUBE ASSEMBLY, UTILITY RETURN	1	
- 5	25-69361- 5	. TUBE ASSEMBLY, UTILITY RETURN	1	
- 6	MS21902D6	. UNION	8	
- 7	25-69361- 11	. TUBE ASSEMBLY, UTILITY CONTROL PRESSURE	1	
- 8	25-69361- 15	. TUBE ASSEMBLY, UTILITY CONTROL PRESSURE	1	
- 9	25-69208- 17	. TUBE ASSEMBLY, POWER CONTROL PRESSURE	1	
- 10	25-69208- 19	. TUBE ASSEMBLY, POWER CONTROL PRESSURE	1	
- 11	25-69208- 21	. TUBE ASSEMBLY, POWER CONTROL PRESSURE	1	
- 12	25-69208- 23	. TUBE ASSEMBLY, POWER CONTROL PRESSURE	1	
- 13	MS21910D6	. TEE	1	
- 14	MS21916D6-4	. REDUCER	1	
	AN6290-6	. GASKET, USE WITH INDEX 14	1	
- 15	25-69208- 39	. TUBE ASSEMBLY, POWER CONTROL PRESSURE	1	
- 16	MS21908D4	. ELBOW	1	
	AN6289D4	. NUT, USE WITH INDEX 16	1	
	AN6291-4	. RING, BACK UP, USE WITH INDEX 16	1	
	AN6290-4	. GASKET, USE WITH INDEX 16	1	
- 17	AL58D1045A11	. SWITCH, HYDRAULIC PRESSURE (GCO) MCDONNELL SPEC 25-69031-7	1	
		ATTACHING PARTS		
	AN3-17A	. BOLT	2	
	AN960D10L	. WASHER	2	
		¤----¤-¤-¤----¤		
- 18	25-69208- 31	. TUBE ASSEMBLY, POWER CONTROL RETURN	1	
- 19	25-69208- 29	. TUBE ASSEMBLY, POWER CONTROL RETURN	1	
- 20	25-69208- 27	. TUBE ASSEMBLY, POWER CONTROL RETURN	1	
- 21	25-69208- 25	. TUBE ASSEMBLY, POWER CONTROL RETURN, SEE FIG. 131-67	REF	

Center Fuselage

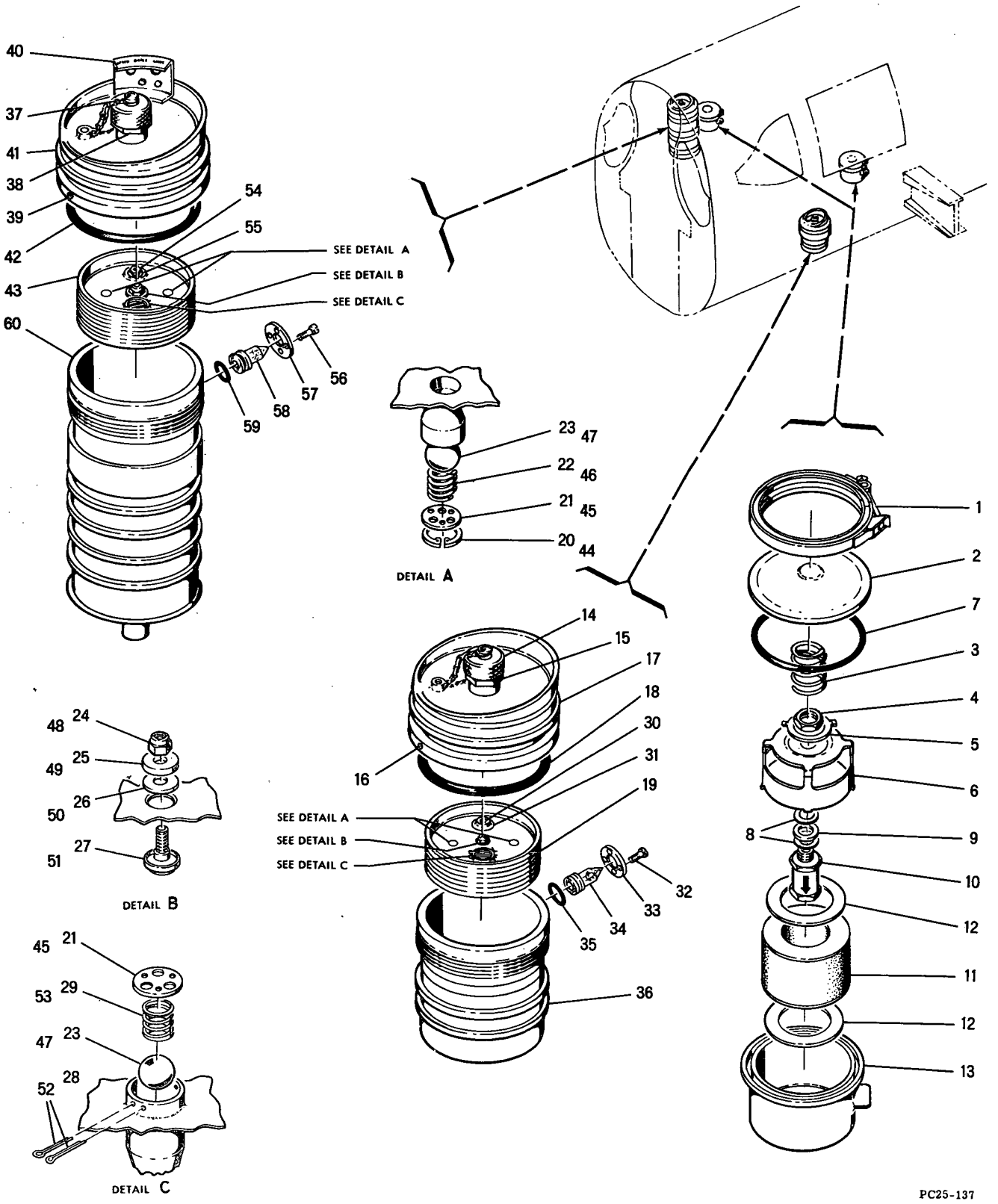

Figure 134 -- Hydraulic System Filter, Utility and Power Reservoir Assemblies

FIGURE & INDEX NUMBER	PART NUMBER	1 2 3 4 5 6 7 DESCRIPTION	UNITS PER ASS'Y	USABLE ON CODE
134 -	25-69254-301	FILTER ASSEMBLY, HYDRAULIC SYSTEM, SEE FIG. 130-57 & 131-88 FOR NEXT HIGHER ASSY	REF	
- 1	4426-750S	• CLAMP (MAR)	1	
- 2	25-69245- 3	• CAP, HYD SYS FILTER	1	
- 3	25-69249- 3	• SPRING, HYDRAULIC SYSTEM FILTER COMPRESSION	1	
- 4	25-69251- 3	• NUT, HYD SYS FILTER, ALTERED FROM GOVERNMENT STANDARD PART NO. AN924-12D	1	
- 5	25-69250- 3	• RETAINER, HYDRAULIC SYSTEM FILTER SPRING	1	
- 6	25-69248- 1	• COVER ASSEMBLY, HYDRAULIC SYSTEM FILTER	1	
- 7	12-3043-1-39	• PACKING, O RING (PA)	1	
- 8	AN960D1716L	• WASHER	AR	
- 9	4M36-10004	• WASHER (MDA)	1	
- 10	11274-1	• VALVE (KY)	1	
- 11	AN6236-2H	• FILTER ELEMENT	1	
- 12	AN6238-1	• GASKET	2	
- 13	25-69244- 3	• HOUSING, HYDRAULIC SYSTEM FILTER	1	
	25-69036- 1	RESERVOIR ASSY, POWER CONTROL HYDRAULIC SYSTEM, SEE FIG. 131-89 FOR NEXT HIGHER ASSEMBLY	REF	A
	25-69036-301	RESERVOIR ASSY, POWER CONTROL HYDRAULIC SYSTEM, SEE FIG. 131-89 FOR NEXT HIGHER ASSEMBLY	REF	B-F
- 14	9056-24	∘ CAP ASSY (RYY)	1	
- 15	6256	• FILLER ASSY (RYY)	1	
	AN6290-20	• GASKET, USE WITH INDEX 15	1	
- 16	AN565D10H7	∘ SCREW	1	
- 17	25-69216- 3	• COVER, HYD RESERVOIR	1	
- 18	AN6227B73	• PACKING, O RING	1	
- 19	25-69218- 1	• PISTON ASSEMBLY, HYDRAULIC RESERVOIR WELDED	1	
- 20	NAS50-100	• ∘ RING, INTERNAL RETAINER	2	
- 21	25-69222- 3	• ∘ RETAINER, HYDRAULIC RESERVOIR BALL	3	
- 22	25-69352- 3	• ∘ SPRING, HYD RESERVOIR PISTON COMPRESSION	2	
- 23	COMM	• ∘ BALL, ALUMINUM, .750 DIAMETER (HST)	3	
- 24	AN363-1032	∘ ∘ NUT	1	
- 25	25-69353- 3	• ∘ WASHER, HYD RESERVOIR PISTON POPPET VALVE	1	
- 26	25-69355- 3	• ∘ SEAT, HYD RESERVOIR PISTON POPPET VALVE	1	
- 27	25-69354- 3	• ∘ BOLT, HYD RESERVOIR PISTON POPPET VALVE	1	
- 28	AN380C2-6	• ∘ PIN, COTTER	2	
- 29	25-69220- 3	∘ ∘ SPRING, HYDRAULIC RESERVOIR BALL VALVE COMPRESSION	1	
- 30	COMM	• ∘ PLUG, STAINLESS STEEL, 1/8-27NPTX3/8 DRY SEAL INTERNAL WRENCHING HEAD (COWR)	1	
- 31	AN867-1	• FLANGE	1	
- 32	AN500A8-7	• SCREW	4	
- 33	25-69224- 3	• WASHER, HYD RESERVOIR	1	
- 34	25-69225- 3	• GLASS, HYDRAULIC RESERVOIR SIGHT	1	
- 35	AN6227B19	∘ PACKING, O RING	1	
- 36	25-69235-301	• SHELL ASSY, HYDRAULIC RESERVOIR POWER CONTROL	1	
	1185-2CX13/32	∘ ∘ INSERT (AF)	4	
	25-69033- 1	RESERVOIR ASSY, UTILITY HYDRAULIC SYSTEM, SEE FIG. 130-59 FOR NEXT HIGHER ASSEMBLY	REF	A
	25-69033-301	RESERVOIR ASSY, UTILITY HYDRAULIC SYSTEM, SEE FIG. 130-59 FOR NET HIGHER ASSEMBLY	REF	B-F
- 37	9056-24	• CAP ASSY (RYY)	1	
- 38	6256	• FILLER ASSY (RYY)	1	
	AN6290-20	• GASKET, USE WITH INDEX 38	1	
- 39	AN565D10H7	• SCREW	1	
- 40	25-69364- 3	∘ BRACKET, BRAKE BLEED LINES SUPPORT	1	
		ATTACHING PARTS		
	AN3-4A	• BOLT	2	
	AN960D10L	• WASHER	2	
	AN960D10	∘ WASHER	2	
	AN364-1032	• NUT	2	
		¤----¤-¤-¤----¤		
- 41	25-69216- 3	• COVER, HYD RESERVOIR	1	
- 42	AN6227B3	• PACKING, O RING	1	
- 43	25-69218- 1	• PISTON ASSY, HYDRAULIC RESERVOIR WELDED	1	
- 44	NAS50-100	• ∘ RING, INTERNAL RETAINER	2	
- 45	25-69222- 3	• ∘ RETAINER, HYDRAULIC RESERVOIR BALL	3	
- 46	25-69352- 3	∘ ∘ SPRING, HYD RESERVOIR PISTON COMPRESSION	2	
- 47	COMM	• ∘ BALL, ALUMINUM, .750 DIAMETER (HST)	3	
- 48	AN363-1032	∘ ∘ NUT	1	
- 49	25-69353- 3	• ∘ WASHER, HYD RESERVOIR PISTON POPPET VALVE	1	
- 50	25-69355- 3	• ∘ SEAT, HYD RESERVOIR PISTON POPPET VALVE	1	
- 51	25-69354- 3	∘ ∘ BOLT, HYD RESERVOIR PISTON POPPET VALVE	1	
- 52	AN380C2-6	• ∘ PIN, COTTER	2	
- 53	25-69220- 3	• ∘ SPRING, HYDRAULIC RESERVOIR BALL VALVE COMPRESSION	1	
- 54	COMM	• ∘ PLUG, STAINLESS STEEL, 1/8-27NPTX3/8 DRY SEAL INTERNAL WRENCHING HEAD (COWR)	1	

FIGURE & INDEX NUMBER	PART NUMBER	1 2 3 4 5 6 7 DESCRIPTION	UNITS PER ASS'Y	USABLE ON CODE
134 -				
- 55	AN867-1	• • FLANGE	1	
- 56	AN500A8-7	• SCREW	4	
- 57	25-69224- 3	• WASHER, HYD RESERVOIR	1	
- 58	25-69225- 3	• GLASS, HYDRAULIC RESERVOIR SIGHT	1	
- 59	AN6227B19	• PACKING, O RING	1	
- 60	25-69215-301	• SHELL ASSEMBLY, HYDRAULIC RESERVOIR	1	
	1185-2CX13/32	• • INSERT (AF)	4	

FIGURE & INDEX NUMBER	PART NUMBER	1 2 3 4 5 6 7 DESCRIPTION	UNITS PER ASS'Y	USABLE ON CODE
135 -	25-69099- 1	PNEUMATIC INSTL, CENTER FUSELAGE, ENGINE ACCESSORIES COMPARTMENT, SEE FIG. 106-27 FOR NEXT HIGHER ASSEMBLY	REF	A
	25-69099-301	PNEUMATIC INSTL, CENTER FUSELAGE, ENGINE ACCESSORIES COMPARTMENT, SEE FIG. 106-27 FOR NEXT HIGHER ASSEMBLY	REF	B
- 1	25-72019- 27	. TUBE ASSEMBLY, EMERGENCY AIR PRESSURE	1	
- 2	25-72019- 37	. TUBE ASSEMBLY, EMERGENCY AIR PRESSURE	1	
- 3	25-72019- 35	. TUBE ASSEMBLY, EMERGENCY AIR PRESSURE	1	
- 4	25-69062- 31	. TUBE ASSY, AIR PRESS.	1	
- 5	AL58D1045A12	. SWITCH, AIR PRESSURE (GCO) MCDONNELL SPEC 25-69031-5	1	
		ATTACHING PARTS		
	AN3-20A	. BOLT	2	
	AN960D10	. WASHER	2	
		¤----¤-¤-¤----¤		
- 6	299A4BB	. VALVE, CHECK (JAPC)	1	
	MS21902D4	. UNION, USE WITH INDEX 6	1	
	AN6290-4	. GASKET, USE WITH INDEX 6	2	
- 7	25-69062- 33	. TUBE ASSY, AIR PRESS.	1	
- 8	840485	. HOUSING, CHEMICAL DRIER (WK)	1	
		ATTACHING PARTS		
	NAS229-8	. SCREW	2	
	AN960D10L	. WASHER	2	
		¤----¤-¤-¤----¤		
	840482	. CARTRIDGE (WK) USE WITH INDEX 8	1	
- 9	25-69362-119	. TUBE ASSY, AIR PRESS.	1	
- 10	25-69062- 3	. TUBE ASSY, AIR PRESS.	1	
- 11	870724	. DRIER, MECHANICAL (WK)	1	
		ATTACHING PARTS		
	AN4-4A	. BOLT	4	
	AN960D416	. WASHER	4	
		¤----¤-¤-¤----¤		
- 12	25-69062- 17	. TUBE ASSEMBLY, DRAIN	1	
- 13	25-69062- 15	. TUBE ASSY, AIR PRESS.	1	
- 14	25-69062- 83	. TUBE ASSY, AIR PRESS.	1	
- 15	7600-23A5-4	. TRANSMITTER, PRESSURE (ECP)	1	
- 16	25-69062- 11	. TUBE ASSY, AIR PRESS.	1	
- 17	299A4BB	. VALVE, CHECK (JAPC)	2	
	MS21902D4	. UNION, USE WITH INDEX 17	4	
	AN6290-4	. GASKET, USE WITH INDEX 17	4	
- 18	25-72019- 11	. TUBE ASSY, GUN CHARGE	1	
- 19	870535	. BOTTLE, AIR (WK)	1	
- 20	25-69253- 1	. SUPPORT ASSEMBLY, 100 CU IN. AIR CYL UPPER	1	
		ATTACHING PARTS		
	AN3-5A	. BOLT	2	
		¤----¤-¤-¤----¤		
	15524-10	. . STRAP ASSY (MAR)	1	
	15524-12	. . STRAP ASSY (MAR)	1	
- 21	25-69358- 1	. SUPPORT ASSEMBLY, 100 CU IN. AIR CYL LOWER	1	
		ATTACHING PARTS		
	AN3-5A	. BOLT	2	
		¤----¤-¤-¤----¤		
	15524-10	. . STRAP ASSY (MAR)	1	
	15524-12	. . STRAP ASSY (MAR)	1	
- 22	25-72019- 13	. TUBE ASSY, GUN CHARGE	1	
- 23	MC1603	. VALVE, AIR PRESSURE RELIEF (MCV) MCDONNELL SPEC 25-72002-1	1	
	AN6290-4	. GASKET, USE WITH INDEX 23	1	
- 24	25-72019- 21	. TUBE ASSY, GUN CHARGE	1	
- 25	25-72019- 31	. TUBE ASSY, GUN CHARGE	1	
- 26	25-72019- 23	. TUBE ASSEMBLY, GUN CHARGE AIR	1	
- 27	25-69359- 73	. TUBE ASSEMBLY, EMERGENCY LANDING GEAR DOWN	1	
- 28	25-69208-105	. TUBE ASSEMBLY, EMERGENCY LANDING GEAR DOWN	1	
- 29	25-69208-109	. TUBE ASSEMBLY, EMERGENCY LANDING GEAR DOWN	1	
- 30	25-69362- 55	. TUBE ASSEMBLY, EMERGENCY LANDING GEAR DOWN	1	
- 31	25-69360- 35	. TUBE ASSEMBLY, EMERGENCY LANDING GEAR DOWN	1	
- 32	25-69361- 99	. TUBE ASSEMBLY, EMERGENCY LANDING GEAR DOWN	1	
- 33	25-69362- 61	. TUBE ASSEMBLY, EMERGENCY LANDING GEAR DOWN	1	
- 34	25-72028- 1	. VENT ASSY, PNEUMATIC	1	
	AN6289D4	. NUT, USE WITH INDEX 34	1	
	AN6291-4	. RING, BACK UP, USE WITH INDEX 34	1	
	AN6290-4	. GASKET, USE WITH INDEX 34	1	
- 35	210B0100-1	. VALVE, BLOW DOWN (CN)	1	
	AN6289D4	. NUT, USE WITH INDEX 35	1	

Center Fuselage

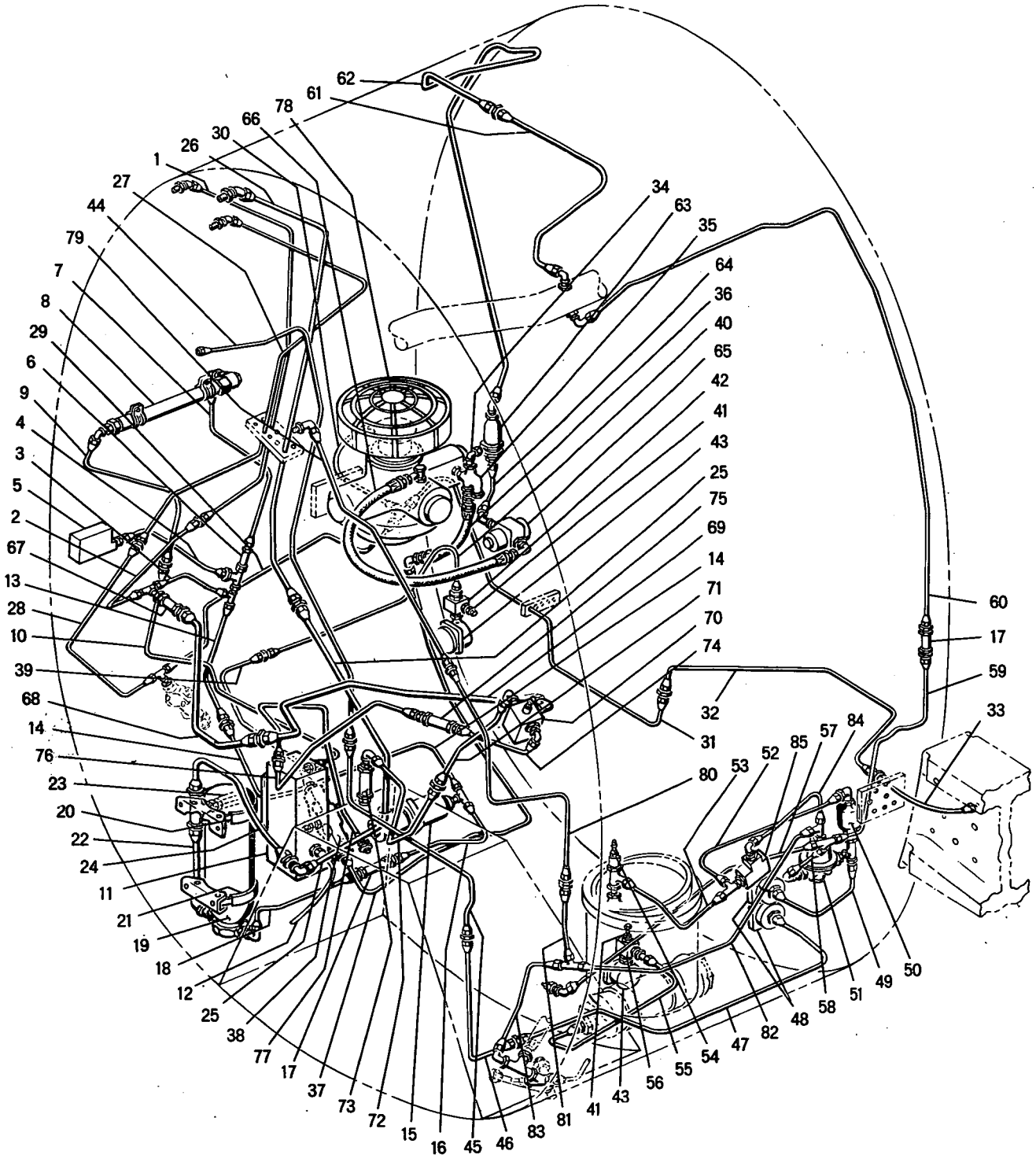

Figure 135 -- Center Fuselage Pneumatic Installation (Engine Accessories Compartment) (Sheet 1 of 2)

FIGURE & INDEX NUMBER	PART NUMBER	1 2 3 4 5 6 7 DESCRIPTION	UNITS PER ASS'Y	USABLE ON CODE
135 -	AN6291-4	• RING, BACK UP, USE WITH INDEX 35	1	
	AN6290-4	• GASKET, USE WITH INDEX 35	1	
- 36	25-69195-165	• HOSE ASSY, AIR PRESS.	1	
	ER6292-4-12	• • HOSE ASSEMBLY (WH)	1	
- 37	25-69062- 5	• TUBE ASSY, AIR PRESS.	1	
- 38	AN6277-4	• VALVE, HYD SHUTTLE	1	
- 39	25-69062- 9	• TUBE ASSY, AIR PRESS.	1	
- 40	25-69062- 7	• TUBE ASSY, AIR PRESS.	1	
- 41	AN6287-1	• VALVE ASSEMBLY, HIGH PRESSURE AIR	2	
- 42	25-69261- 3	• MANIFOLD, AIR CHARGED	1	
- 43	AN5769-2A	• GAGE, PRESSURE	2	
- 44	25-69208- 11	• TUBE ASSY, STATIC AIR	1	
- 45	25-69208- 57	• TUBE ASSY, STATIC AIR	1	
- 46	25-69208- 53	• TUBE ASSY, STATIC AIR	1	
- 47	25-69362- 33	• TUBE ASSY, STATIC AIR	1	
- 48	25-69256- 1	• GAGE, RESERVOIR PRESSURE, ALTERED FROM GOVT STANDARD PART NO. AN5771-1A	2	
- 49	25-69208- 91	• TUBE ASSY, STATIC AIR	1	
- 50	AN6240-1	• FILTER, HYDRAULIC	1	
- 51	312735	• REGULATOR, PRESSURE (GPC)	1	
		ATTACHING PARTS		
	AN3-16A	• BOLT	2	
	AN960D10L	• WASHER	2	
		¤----¤-¤-¤----¤		
- 52	25-69327- 33	• TUBE ASSY, STATIC AIR	1	
- 53	25-69327- 35	• TUBE ASSY, STATIC AIR	1	
- 54	350B1A	• VALVE, AIR BLEEDER (AADC) MCDONNELL SPEC 25-69001-3	1	
	AN6290-4	• GASKET, USE WITH INDEX 54	1	
- 55	25-69208- 81	• TUBE ASSY, AIR PRESS.	1	
- 56	25-69260- 3	• MANIFOLD, AIR CHARGE	1	
- 57	25-69208- 75	• TUBE ASSEMBLY, EXTERNAL AIR	1	
- 58	25-69208- 87	• TUBE ASSY, STATIC AIR	1	
- 59	25-69208- 73	• TUBE ASSY, ENGINE AIR	1	
- 60	25-69361- 23	• TUBE ASSY, ENGINE AIR	1	
- 61	25-69362- 67	• TUBE ASSY, ENGINE AIR	1	
- 62	25-69208- 49	• TUBE ASSY, ENGINE AIR	1	
- 63	50067	• FILTER, LINE TYPE AIR (PUP) MCDONNELL SPEC 25-72007-1	1	
- 64	25-69208- 59	• TUBE ASSY, ENGINE AIR	1	
- 65	135D100-1	• REGULATOR, PRESS. (CN)	1	
		ATTACHING PARTS		
	AN74A4	• BOLT	2	
	AN960D416	• WASHER	6	
		¤----¤-¤-¤----¤		
- 66	25-69195-169	• HOSE ASSEMBLY, ENGINE AIR	1	
	ER6271-6-16.25	• • HOSE ASSEMBLY (WH)	1	
- 67	299A488	• VALVE, CHECK (JAPC)	1	B-F
	MS21916D10-4	• REDUCER, USE WITH INDEX 67	1	B-F
	AN6290-4	• GASKET, USE WITH INDEX 67	1	B-F
- 68	25-69362- 87	• TUBE ASSY, AIR PRESS.	1	B-F
- 69	25-69362- 89	• TUBE ASSY, AIR PRESS.	1	B-F
- 70	70000-20	• VALVE, PNEUMATIC 4-WAY SEQUENCE (HYRM) MCDONNELL SPEC 25-69345-3	1	B-F
		ATTACHING PARTS		
	NAS229-5	• SCREW	4	
	AN960D10	• WASHER	4	
		¤----¤-¤-¤----¤		
- 71	25-69362- 97	• TUBE ASSY, EMERGENCY PUMP DOOR OPEN	1	B-F
- 72	25-69362- 99	• TUBE ASSY, EMERGENCY PUMP DOOR OPEN	1	B-F
- 73	82-100-070	• RESTRICTOR (GPPI)	1	B-F
	AN6290-4	• GASKET, USE WITH INDEX 73	1	B-F
- 74	25-69362- 95	• TUBE ASSY, EMERGENCY PUMP DOOR CLOSE	1	B-F
- 75	82-100-070	• RESTRICTOR (GPPI)	1	B-F
	MS21902D4	• UNION, USE WITH INDEX 75	2	B-F
	AN6290-4	• GASKET, USE WITH INDEX 75	2	B-F
- 76	25-69362- 93	• TUBE ASSY, EMERGENCY PUMP DOOR CLOSE	1	B-F
- 77	25-69362- 91	• TUBE ASSY, EMERGENCY PUMP DOOR CLOSE	1	B-F
- 78	130R0300-9	• COMPRESSOR, AIR (CNL) MCDONNELL SPEC 25-72001-1	1	
- 79	25-69062-111	• TUBE ASSEMBLY, PRESSURE REGULATOR VENT	1	
- 80	25-69062-113	• TUBE ASSEMBLY, PRESSURE REGULATOR VENT	1	
- 81	25-69062-115	• TUBE ASSEMBLY, PRESSURE REGULATOR VENT	1	
- 82	25-69062-117	• TUBE ASSEMBLY, PRESSURE REGULATOR VENT	1	
- 83	25-69062-119	• TUBE ASSEMBLY, PRESSURE REGULATOR VENT	1	
- 84	25-69327- 37	• TUBE ASSEMBLY, RELIEF VALVE VENT	1	

Center Fuselage

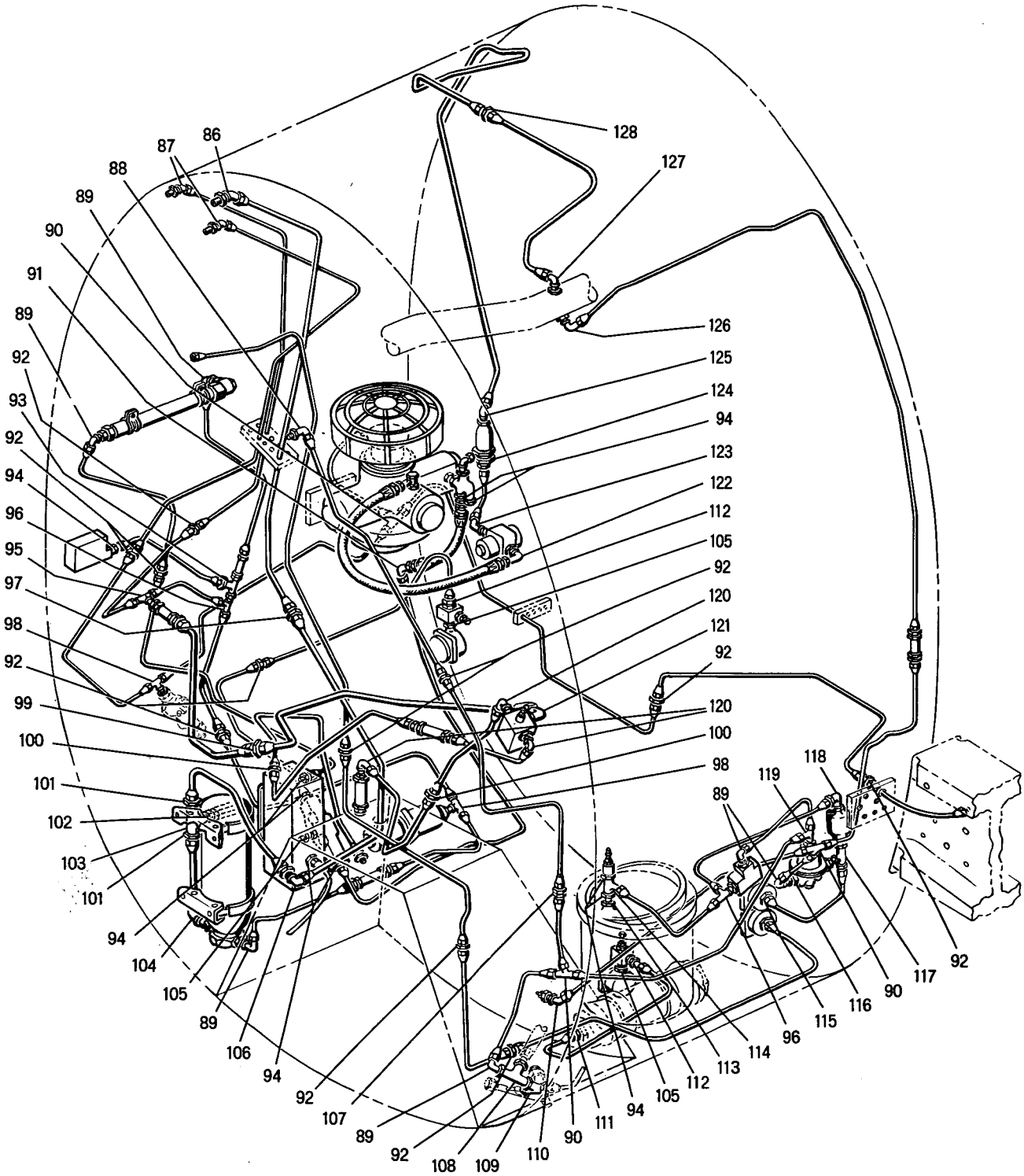

PC25-137A

Figure 135 -- Center Fuselage Pneumatic Installation (Engine Accessories Compartment) (Sheet 2 of 2)

FIGURE & INDEX NUMBER	PART NUMBER	1 2 3 4 5 6 7 DESCRIPTION	UNITS PER ASS'Y	USABLE ON CODE
135 - 85	11631	• VALVE, RELIEF (KY)	1	
		ATTACHING PARTS		
	AN3-14A	• BOLT	2	
	AN960D10L	• WASHER	2	
		¤----¤-¤-¤----¤		
- 86	MS21907D8	• ELBOW	1	
	AN924-8D	• NUT, USE WITH INDEX 86	1	
	AN960D1216	• WASHER, USE WITH INDEX 86	1	
- 87	MS21907D4	• ELBOW	2	
	AN924-4D	• NUT, USE WITH INDEX 87	2	
	AN960D716	• WASHER, USE WITH INDEX 87	2	
- 88	MS21908D4	• ELBOW	1	
	AN924-4D	• NUT, USE WITH INDEX 88	1	
	AN960D816	• WASHER, USE WITH INDEX 88	1	
- 89	MS21908D4	• ELBOW	6	
	AN6289D4	• NUT, USE WITH INDEX 89	6	
	AN6291-4	• RING, BACK UP, USE WITH INDEX 89	6	
	AN6290-4	• GASKET, USE WITH INDEX 89	6	
- 90	MS21905D4	• TEE	3	
- 91	MS21904D4	• ELBOW	1	
- 92	MS21902D4	• UNION	11	
- 93	AN938D4	• TEE	1	
	MS21902D4	• UNION, USE WITH INDEX 93	2	
	AN6290-4	• GASKET, USE WITH INDEX 93	2	
- 94	MS21902D4	• UNION	9	
	AN6290-4	• GASKET, USE WITH INDEX 94	9	
- 95	MS21909D4	• TEE	1	
	MS21914D4	• CAP, USE WITH INDEX 95	1	A
	AN6289D4	• NUT, USE WITH INDEX 95	1	B-F
	AN6291-4	• RING, BACK UP, USE WITH INDEX 95	1	B-F
	AN6290-4	• GASKET, USE WITH INDEX 95	1	B-F
- 96	MS21912D4	• TEE	2	
	AN6289D4	• NUT, USE WITH INDEX 96	2	
	AN6291-4	• RING, BACK UP, USE WITH INDEX 96	2	
	AN6290-4	• GASKET, USE WITH INDEX 96	2	
- 97	MS21902D8	• UNION	1	
- 98	MS21909D4	• TEE	2	
	AN6289D4	• NUT, USE WITH INDEX 98	2	
	AN6291-4	• RING, BACK UP, USE WITH INDEX 98	2	
	AN6290-4	• GASKET, USE WITH INDEX 98	2	
- 99	MS21902D10	• UNION	1	B-F
-100	MS21902D4	• UNION	2	B-F
-101	MS21902D8	• UNION	2	
	AN6290-8	• GASKET, USE WITH INDEX 101	2	
-102	AN893-3D	• BUSHING	1	
	AN6290-8	• GASKET, USE WITH INDEX 102	1	
-103	AN938D8	• TEE	1	
-104	MS21908D8	• ELBOW	1	
	AN6289D8	• NUT, USE WITH INDEX 104	1	
	AN6291-8	• RING, BACK UP, USE WITH INDEX 104	1	
	AN6290-8	• GASKET, USE WITH INDEX 104	1	
	MS21915D8-4	• BUSHING, USE WITH INDEX 104	1	
	AN6290-4	• GASKET, USE WITH INDEX 104	1	
-105	MS21903D4	• UNION	3	
	AN6289D4	• NUT, USE WITH INDEX 105	3	
	AN6291-4	• RING, BACK UP, USE WITH INDEX 105	3	
	AN6290-4	• GASKET, USE WITH INDEX 105	6	
-106	MS21907D8	• ELBOW	1	
	AN924-8D	• NUT, USE WITH INDEX 106	1	
-107	MS21903D4	• UNION	1	
	AN924-4D	• NUT, USE WITH INDEX 107	1	
-108	AN938D4	• TEE	1	
	AN6290-4	• GASKET, USE WITH INDEX 108	2	
	AN6291-4	• RING, BACK UP, USE WITH INDEX 108	1	
	AN6289D4	• NUT, USE WITH INDEX 108	1	
-109	AN938D4	• TEE	1	
	AN815-4D	• UNION, USE WITH INDEX 109	1	
	MS21903D4	• UNION USE WITH INDEX 109	1	
	MS21902D4	• UNION USE WITH INDEX 109	1	
	AN6290-4	• GASKET, USE WITH INDEX 109	3	
-110	MS21907D4	• ELBOW	1	
	ER929-4	• CAP (WH) USE WITH INDEX 110	1	
	AN924-4D	• NUT, USE WITH INDEX 110	1	
	AN960D716	• WASHER, USE WITH INDEX 110	1	
	RS106A60	• CHAIN ASSEMBLY (RYY) USE WITH INDEX 110	1	
-111	25-69356- 3	• ADAPTER, FLARELESS TUBE AIR CONNECTION	1	
	AF47A1562	• PACKING, O RING, USE WITH INDEX 111	1	
-112	MS21903D4	• UNION	2	

FIGURE & INDEX NUMBER	PART NUMBER	1 2 3 4 5 6 7 DESCRIPTION	UNITS PER ASS'Y	USABLE ON CODE
135 -	AN924-4D	• NUT, USE WITH INDEX 112	2	
	AN6290-4	• GASKET, USE WITH INDEX 112	2	
-113	MS21903D4	• UNION	1	
	AN6289D4	• NUT, USE WITH INDEX 113	1	
	AN6291-4	• RING, BACK UP, USE WITH INDEX 113	1	
	AN6290-4	• GASKET, USE WITH INDEX 113	1	
-114	AN938D4	• TEE	1	
	AN6290-4	• GASKET, USE WITH INDEX 114	1	
-115	ER816-4D	• UNION (WH)	2	
-116	AN893-2D	• BUSHING	1	
	AN6290-6	• GASKET, USE WITH INDEX 116	1	
-117	MS21910D6	• TEE	1	
	MS21915D6-4	• BUSHING, USE WITH INDEX 117	1	
	MS21903D6	• UNION, USE WITH INDEX 117	1	
	AN6290-6	• GASKET, USE WITH INDEX 117	4	
	AN6291-6	• RING, BACK UP, USE WITH INDEX 117	2	
	AN6289D6	• NUT, USE WITH INDEX 117	2	
-118	AN939D4	• ELBOW	1	
	MS21916D6-4	• REDUCER, USE WITH INDEX 118	1	
	MS21902D4	• UNION, USE WITH INDEX 118	1	
	AN6290-6	• GASKET, USE WITH INDEX 118	1	
	AN6290-4	• GASKET, USE WITH INDEX 118	2	
-119	MS21912D4	• TEE	1	
	AN6290-4	• GASKET, USE WITH INDEX 119	1	
	AN6291-4	• RING, BACK UP, USE WITH INDEX 119	1	
	AN6289D4	• NUT, USE WITH INDEX 119	1	
	AN893-2D	• BUSHING, USE WITH INDEX 119	1	
	AN6290-6	• GASKET, USE WITH INDEX 119	1	
-120	MS21908D4	• ELBOW	3	B-F
	AN6289D4	• NUT, USE WITH INDEX 120	3	B-F
	AN6291-4	• RING, BACK UP, USE WITH INDEX 120	3	B-F
	AN6290-4	• GASKET, USE WITH INDEX 120	3	B-F
-121	AN939D4	• ELBOW	1	B-F
	MS21916D10-4	• REDUCER, USE WITH INDEX 121	1	B-F
	MS21903D4	• UNION, USE WITH INDEX 121	1	B-F
	AN6290-4	• GASKET, USE WITH INDEX 121	3	B-F
	AN6291-4	• RING, BACK UP, USE WITH INDEX 121	1	B-F
	AN6289D4	• NUT, USE WITH INDEX 121	1	B-F
-122	MS21908D6	• ELBOW	1	
	AN6289D6	• NUT, USE WITH INDEX 122	1	
	AN6291-6	• RING, BACK UP, USE WITH INDEX 122	1	
	AN6290-6	• GASKET, USE WITH INDEX 122	1	
-123	MS21907D5	• ELBOW	1	
	AN6289D5	• NUT, USE WITH INDEX 123	1	
	AN6291-5	• RING, BACK UP, USE WITH INDEX 123	1	
	AN6290-5	• GASKET, USE WITH INDEX 123	1	
-124	MS21916D6-5	• REDUCER	1	
	AN6290-6	• GASKET, USE WITH INDEX 124	1	
-125	MS21907D6	• ELBOW	1	
	AN6290-6	• GASKET, USE WITH INDEX 125	1	
	AN6291-6	• RING, BACK UP, USE WITH INDEX 125	1	
	AN6289D6	• NUT, USE WITH INDEX 125	1	
-126	MS21908D4	• ELBOW	1	
	AN924-4D	• NUT, USE WITH INDEX 126	1	
	5160-534024-4	• GASKET (PA) USE WITH INDEX 126	1	
-127	MS21908D6	• ELBOW	1	
	AN924-6D	• NUT, USE WITH INDEX 127	1	
	5160-534024-6	• GASKET (PA) USE WITH INDEX 127	1	
-128	MS21902D6	• UNION	1	

FIGURE & INDEX NUMBER	PART NUMBER	1 2 3 4 5 6 7 DESCRIPTION	UNITS PER ASS'Y	USABLE ON CODE
136 -	25-77000- 1	EQUIPMENT INSTL, CENTER FUSELAGE ELECTRICAL, SEE FIG. 106-25 FOR NEXT HIGHER ASSEMBLY	REF	
- 1	25-77066- 3	• SCREEN, TRANSF & RECT	1	
		ATTACHING PARTS		
- 2	NAS229-11	• SCREW	4	
	AN960D10	• WASHER	4	
		¤----¤-¤-¤----¤		
- 3	400213-0	• TRANSFORMER & RECTIFIER (MAL) MCDONNELL SPEC 25-77010-1	1	
		ATTACHING PARTS		
	86418-1	• BOLT (MAL)	REF	
	4010-18	• WASHER, LOCK (SH)	REF	
		¤----¤-¤-¤----¤		
- 4	25-77068- 3	• GASKET, TRANSFORMER & RECTIFIER MOUNTING	1	
- 5	25-77071- 3	• SUPPORT, TRANSFORMER & RECTIFIER	1	
		ATTACHING PARTS		
- 6	AN3-4A	• BOLT	3	
	AN960D10L	• WASHER	3	
	AN936A10	• WASHER	3	
	AN960D10	• WASHER	3	
	AN364-1032	• NUT	3	
		¤----¤-¤-¤----¤		
	25-77003- 1	• PANEL ASSEMBLY, CENTER SECTION RELAY	1	A
	25-77003-303	• PANEL ASSEMBLY, CENTER SECTION RELAY	1	B-C
	25-77006- 1	• PANEL ASSEMBLY, CENTER SECTION RELAY	1	D-F
		ATTACHING PARTS		
- 7	AN3-5A	• BOLT	9	
	AN960D10	• WASHER	27	
	AN364-1032	• NUT	9	
- 8	AN3-4A	• BOLT	9	
	AN960D10L	• WASHER	9	
	AN960D10	• WASHER	9	
	AN364-1032	• NUT	9	
		¤----¤-¤-¤----¤		
- 9	25-77098- 1	• • COVER ASSEMBLY, RELAY PANEL FORWARD	1	
		ATTACHING PARTS		
- 10	NAS229-9	• • SCREW	4	
	AN960D10L	• • WASHER	4	
		¤----¤-¤-¤----¤		
- 11	25-77072- 1	• • COVER ASSEMBLY, RELAY PANEL	1	
		ATTACHING PARTS		
- 12	NAS229-9	• • SCREW	4	
	AN960D10L	• • WASHER	4	
		¤----¤-¤-¤----¤		
	25-89017- 51	• • • NAMEPLATE	1	
	25-79000-C151	• • BUNDLE ASSY, WIRE	1	
- 13	AN3100-22-19S	• • • RECEPTACLE, PURGE & TRANSFER RELAY	1	
- 14	AN3100-22-19S	• • • RECEPTACLE, PRESSURE FUELING NO. 1 CHECK RELAY	1	
- 15	AN3100-22-19S	• • • RECEPTACLE, PRESSURE FUELING NO. 2 CHECK RELAY	1	
	GC61-T	• • • TERMINAL (TOM)	2	
	25-77076- 5	• • • BUS, INTERPHASE CONTROL, USE WITH D7235-1-10 (SPTD)	4	
	25-77076- 3	• • • BUS, INTERPHASE CONTROL, USE WITH D7235-1-10 (SPTD)	2	
- 16	D7235-1-10	• • CONTROL (SPTD) OVERLOAD SENSING A-C BOOST PUMP TRIPPING MECHANISM	3	
- 17	D7235-1-10	• • CONTROL (SPTD) OVERLOAD SENSING TRANSFER PUMP RELAY TRIPPING MECHANISM	3	
- 18	5M7-10-8	• • PANEL ASSEMBLY, ELECTRICAL CONNECTOR (MDA)	1	
- 19	5M8-10-8	• • COVER, PANEL ASSEMBLY (MDA)	1	
- 20	AN3433-4-3	• • BUS, TERM. BLOCK	1	
- 21	AN3433-4-2	• • BUS, TERM. BLOCK	1	
- 22	6042H31	• • RELAY (CUT) A-C BOOST PUMP	1	
- 23	6042H31	• • RELAY (CUT) TRANSFER PUMP	1	
- 24	6042H38	• • RELAY (CUT) D-C BOOST PUMP	1	
- 25	D7235-1-80	• • CONTROL (SPTD) OVERLOAD SENSING D-C BOOST PUMP TRIPPING MECHANISM	1	
- 26	AN3312-1	• • RELAY, PRESSURE FUELING	1	
- 27	AN3312-1	• • RELAY, TRANSFER	1	
- 28	9048-1	• • RELAY (LR) PUMP SELECTOR	1	
- 29	9048-1	• • RELAY (LR) NEGATIVE G RELAY	1	

Center Fuselage

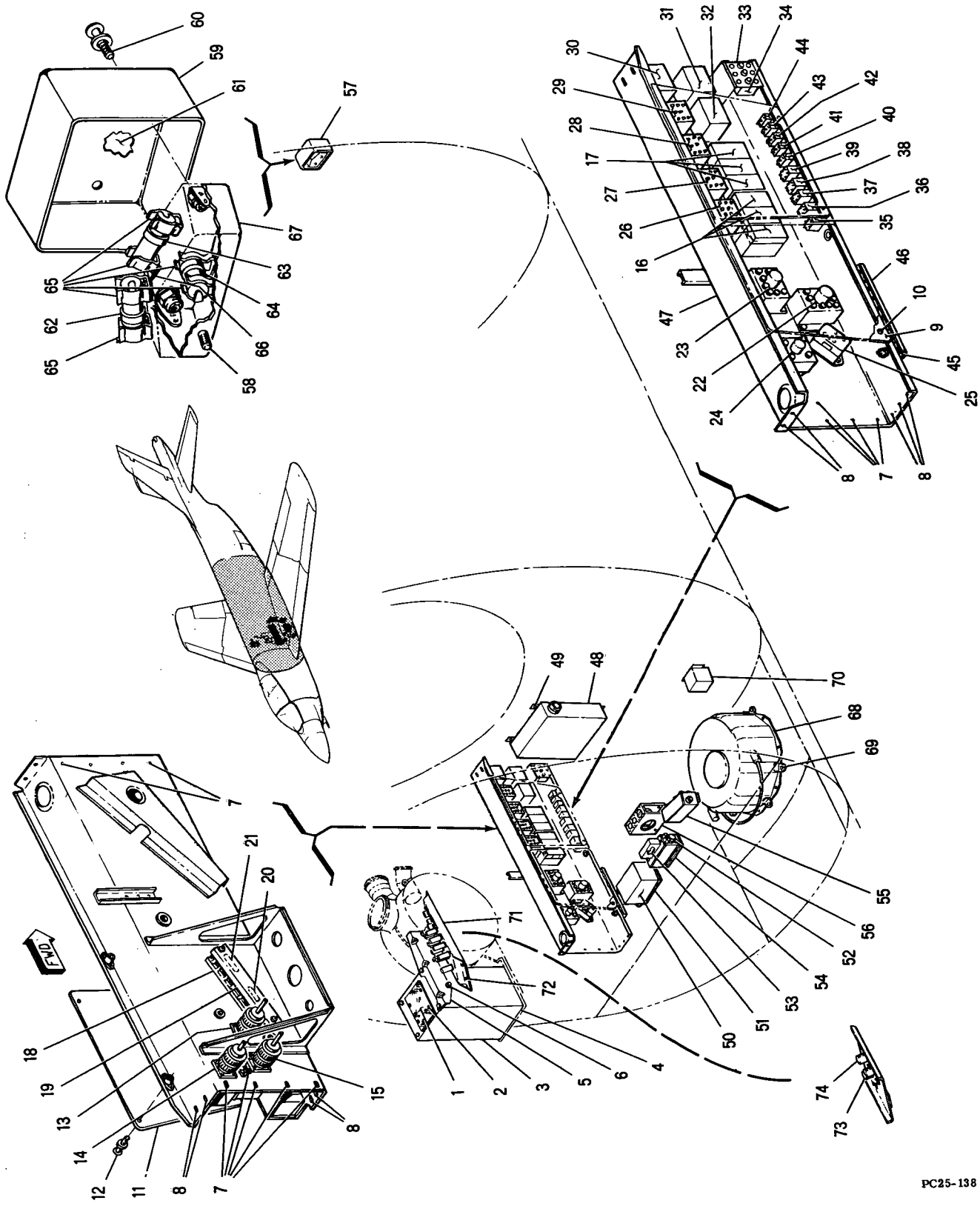

Figure 136 -- Center Fuselage Electrical Equipment Installation

FIGURE & INDEX NUMBER	PART NUMBER	1 2 3 4 5 6 7 DESCRIPTION	UNITS PER ASS'Y	USABLE ON CODE
136 - 30	AN3310-1	• • RELAY, PRESSURE FUELING CHECK NO. 1	1	
- 31	AN3310-1	• • RELAY, PRESSURE FUELING CHECK NO. 2	1	
- 32	AN3310-1	• • RELAY, PURGE	1	
- 33	25-89037- 5	• • NAMEPLATE, NEGATIVE G CIRCUIT BREAKERS	1	
- 34	52A3A312-5	• • CIRCUIT BREAKER, NEGATIVE G (BUA)	4	A
- 35	AN3027-6	• • SWITCH, A-C BOOST	1	
- 36	AN3027-6	• • SWITCH, D-C BOOST	1	
- 37	AN3027-6	• • SWITCH, WING FUEL TRANSFER	1	
- 38	AN3027-6	• • SWITCH, FUSELAGE FUEL TRANSFER	1	
- 39	AN3027-6	• • SWITCH, NEGATIVE G BOOST	1	
- 40	AN3021-7	• • SWITCH, ENGINE MASTER	1	
- 41	AN3021-7	• • SWITCH, FORWARD TANK PRESSURE FUELING CHECK	1	
- 42	AN3021-7	• • SWITCH, CENTER TANK PRESSURE FUELING CHECK	1	
- 43	AN3021-7	• • SWITCH, AFT FUSELAGE FUEL TANK CHECK	1	
- 44	AN3021-7	• • SWITCH, WING TANK PRESSURE FUELING CHECK	1	
- 45	5M7-10-10	• • PANEL ASSY, ELECTRICAL CONNECTOR (MDA)	1	
- 46	5M8-10-10	• • COVER, PANEL ASSY (MDA)	1	
- 47	25-77058- 1	• • BEAM ASSEMBLY, RELAY PANEL	1	A
	25-77058-301	• • BEAM ASSEMBLY, RELAY PANEL	1	B-F
- 48	R88C1333-005	• UNIT, RATE, 141D217G3 (GE) GFP	1	
		ATTACHING PARTS		
- 49	NAS230-14	• SCREW	4	
	AN960D416	• WASHER	4	
		¤----¤-¤-¤----¤		
- 50	NAF1330-1	• UNIT, CONTROL	1	
- 51	840542	• BASE, MOUNTING (WK)	1	
		ATTACHING PARTS		
	AN515-6R8	• SCREW	4	
	AN960D6L	• WASHER	4	
		¤----¤-¤-¤----¤		
- 52	164-07	• AMPLIFIER, FUEL QUANITY (AVEN) MCDONNELL SPEC 25-58084-19	1	
- 53	166-07-750	• CONDENSER, REFERENCE (AVEN) MCDONNEL SPEC 25-58084-25	1	
- 54	1613-02-1	• MOUNT, SHOCK (AVEN) MCDONNELL SPEC 25-58084-21	1	
		ATTACHING PARTS		
	NAS229-7	• SCREW	4	
	AN960D10L	• WASHER	4	
		¤----¤-¤-¤----¤		
- 55	1616-06-128	• SIMULATOR, FUEL QUANITY (AVEN) MCDONNELL SPEC 25-58084-27	1	
		ATTACHING PARTS		
	NAS229-34	• SCREW	4	
	AN960D10L	• WASHER	4	
	NAS43DD3-64	• SPACER	1	
		¤----¤-¤-¤----¤		
- 56	25-77084- 3	• BRACKET, FIRE DETECTOR RELAY	1	A-C
		ATTACHING PARTS		
	AN3-3A	• BOLT	4	
	AN960D10L	• WASHER	4	
		¤----¤-¤-¤----¤		
- 57	25-77050- 1	• SWITCH ASSY, ATTITUDE	1	
		ATTACHING PARTS		
- 58	NAS229-11	• SCREW	4	
	AN960D10	• WASHER	4	
		¤----¤-¤-¤----¤		
- 59	25-77052- 1	• • COVER ASSEMBLY, ATTITUDE SWITCH	1	
		ATTACHING PARTS		
- 60	NAS229-8	• • SCREW	2	
	AN960-10L	• • WASHER	2	
		¤----¤-¤-¤----¤		
- 61	25-89017- 25	• • • NAMEPLATE	1	
- 62	310E	• • SWITCH, LEFT ROLL MERCURY, ELECTRIC SWITCH COMPANY, COLUMBUS, INDIANA	1	
- 63	310E	• • SWITCH, RIGHT ROLL MERCURY, ELECTRIC SWITCH COMPANY, COLUMBUS, INDIANA	1	
- 64	310E	• • SWITCH, PITCH MERCURY, ELECTRIC SWITCH COMPANY, COLUMBUS, INDIANA	1	
- 65	60924	• • CLIP, ELECTRIC SWITCH CO, COLUMBUS, INDIANA	6	
- 66	25-77053- 3	• • BUS, 10 AMPERE	1	
- 67	25-77051- 3	• • BRACKET, ATTITUDE SWITCH	1	
- 68	AS578/ARA25	• ANTENNA, GFP	1	

FIGURE & INDEX NUMBER	PART NUMBER	1 2 3 4 5 6 7 DESCRIPTION	UNITS PER ASS'Y	USABLE ON CODE
136 -		ATTACHING PARTS		
- 69	AN4-11A	• BOLT	6	
	AN960D46	• WASHER	6	
		¤----¤-¤-¤----¤		
- 70	R88U0208-005	• UNIT, PENDULUM, 144D281G1 (GE) GFP	1	
		ATTACHING PARTS		
	NAS229-7	• SCREW	4	
	AN960D10L	• WASHER	4	
		¤----¤-¤-¤----¤		
- 71	6742405	• CONTROL, RELAY, GFP	1	C-F
		ATTACHING PARTS		
- 72	NAS229-13	• SCREW	4	
	AN960D10	• WASHER	4	
		¤----¤-¤-¤----¤		
	25-77093- 1	• PANEL ASSEMBLY, RELAY BOX DUMMY RECEPTACLE, USE WHEN 6742405 CONTROL RELAY IS NOT INSTALLED	1	C
- 73	2182-8	• • RECEPTACLE, DUMMY (CED)	2	C
- 74	2182-6	• • RECEPTACLE, DUMMY (CED)	1	C

FIGURE & INDEX NUMBER	PART NUMBER	1 2 3 4 5 6 7 DESCRIPTION	UNITS PER ASS'Y	USABLE ON CODE
137 -	25-77001- 1	WIRING INSTALLATION, CENTER FUSELAGE ELECTRICAL, SEE FIG. 106-26 FOR NEXT HIGHER ASSEMBLY	REF	
	25-79000-125	• BUNDLE ASSEMBLY, WIRE	1	
- 1	UG21B/U	• • PLUG, ARC/27 COAXIAL SWITCH	1	
- 2	UG160A/U	• • JACK	1	
- 3	5M13-8	• • BUSHING (MDA)	1	
- 4	920AL900-14	• SEAL (JM)	1	
- 5	NAS43-14-8	• SPACER	1	
- 6	AN3066-8	• NUT	1	
- 7	AN3064-20	• CONNECTOR	5	
	AN3054-20	• NUT, USE WITH INDEX 7	5	
	AN3066-20	• NUT, USE WITH INDEX 7	5	
- 8	5M7-10-3	• PANEL ASSEMBLY, ELECTRICAL CONNECTOR (MDA)	2	
	5M8-10-3	• COVER, PANEL ASSEMBLY (MDA) USE WITH INDEX 8	2	
- 9	D4680-2-24	• LIGHT ASSEMBLY (GMC)	1	
		ATTACHING PARTS		
	AN509-10R5	• SCREW	8	
	AN364-1032	• NUT	8	
		¤----¤-¤-¤----¤		
- 10	D4680-1-24	• LIGHT ASSEMBLY (GMC)	1	
		ATTACHING PARTS		
	AN507-832R8	• SCREW	6	
		¤----¤-¤-¤----¤		
	25-79000-A139	• BUNDLE ASSEMBLY, WIRE	1	
- 11	3106BS12S3S	• • PLUG (CED) AFT FUSELAGE TANK PILOT VALVE, USE WITH MS29513-14	2	
- 12	163-07	• • PLUG (AVEN) CENTER FUS TANK FUEL QTY UNIT	1	
- 13	163-088	• • PLUG (AVEN) CENTER FUS TANK FUEL QTY UNIT	1	
- 14	163-046	• • PLUG (AVEN) CENTER FUS TANK FUEL QTY UNIT	1	
- 15	163-027	• • JACK (AVEN) FUEL GAGING SYSTEM	1	
- 16	163-089	• • JACK (AVEN) FUEL GAGING SYSTEM	1	
- 17	25-77054- 3	• CONDUIT, FUS CROSSOVER LEFT SIDE	1	
- 18	25-77054- 4	• CONDUIT, FUS CROSSOVER RIGHT SIDE	1	
	25-79000- 4	• BUNDLE ASSEMBLY, WIRE	1	A
- 19	3106BS8S1P	• • PLUG (CED) SILVER CELL BATTERY BOX USE WITH 3-1549-3-26 O RING (PA)	1	
	25-79000-A159	• BUNDLE ASSEMBLY, WIRE	1	
- 20	163-07	• • PLUG (AVEN) FWD FUS TANK FUEL QTY FITTING	1	
- 21	163-088	• • PLUG (AVEN) FWD FUS TANK FUEL QTY FITTING	1	
- 22	163-089	• • JACK (AVEN) FUEL GAGING SYSTEM	1	
- 23	163-027	• • JACK (AVEN) FUEL GAGING SYSTEM	1	
	25-79000-A150	• BUNDLE ASSEMBLY, WIRE	1	
- 24	3106BS12S3S	• • PLUG (CED) RIGHT WING TANK PILOT VALVE, USE WITH MS29513-14 O RING	2	
	25-79000-B148	• BUNDLE ASSEMBLY, WIRE	1	A-B
	25-79000-D148	• BUNDLE ASSEMBLY, WIRE	1	C
- 25	163-07	• • PLUG (AVEN) AFT FUS TANK FUEL QUANTITY UNIT	1	
- 26	163-088	• • PLUG (AVEN) AFT FUS TANK FUEL QUANTITY UNIT	1	
- 27	163-07	• • PLUG (AVEN) FUEL GAGING SYSTEM	2	
- 28	163-088	• • PLUG (AVEN) FUEL GAGING SYSTEM	2	
- 29	UG274/U	• • CONNECTOR, TEE, FUEL GAGING SYSTEM	1	
- 30	163-010	• • CONNECTOR, TEE (AVEN) FUEL GAGING SYSTEM	1	
- 31	3106BS10SL3S	• • PLUG (CED) 2PSI FUEL TANK PRESSURE SWITCH, USE WITH MS29513-12 O RING	1	
- 32	3106BS10SL3S	• • PLUG (CED) HYDRAULIC PRESSURE SWITCH, USE WITH MS29513-12 O RING	1	
- 33	3106BS12S3S	• • PLUG (CED) CENTER FUSELAGE TANK PILOT VALVE, USE WITH MS29513-14 O RING	2	
- 34	163-07	• • PLUG (AVEN) FUEL QUANTITY SIMULATOR	2	
- 35	163-088	• • PLUG (AVEN) FUEL QUANTITY SIMULATOR	2	
- 36	163-07	• • PLUG (AVEN) FUEL GAGING SYSTEM	4	
- 37	163-088	• • PLUG (AVEN) FUEL GAGING SYSTEM	4	
- 38	163-010	• • CONNECTOR, TEE (AVEN) FUEL GAGING SYSTEM	2	
- 39	UG274/U	• • CONNECTOR, TEE FUEL GAGING SYSTEM	2	
- 40	163-07	• • PLUG (AVEN) LEFT WING TANK FUEL QUANTITY FITTING	1	
	163-012	• • ADAPTER (AVEN) USE WITH INDEX 40	1	
- 41	163-088	• • PLUG (AVEN) LEFT WING TANK FUEL QUANTITY FITTING	1	
	UG306/U	• • ADAPTER, USE WITH INDEX 41	1	
	25-79000-163	• BUNDLE ASSEMBLY, WIRE	1	
- 42	163-07	• • PLUG (AVEN) FUEL QUANTITY SIMULATOR	1	
- 43	163-088	• • PLUG (AVEN) FUEL QUANTITY SIMULATOR	1	
- 44	163-07	• • PLUG (AVEN) RIGHT WING TANK FUEL QUANTITY FITTING	1	
	163-012	• • ADAPTER (AVEN) USE WITH INDEX 44	1	
- 45	163-088	• • PLUG (AVEN) RIGHT WING TANK FUEL QUANTITY FITTING	1	

Center Fuselage

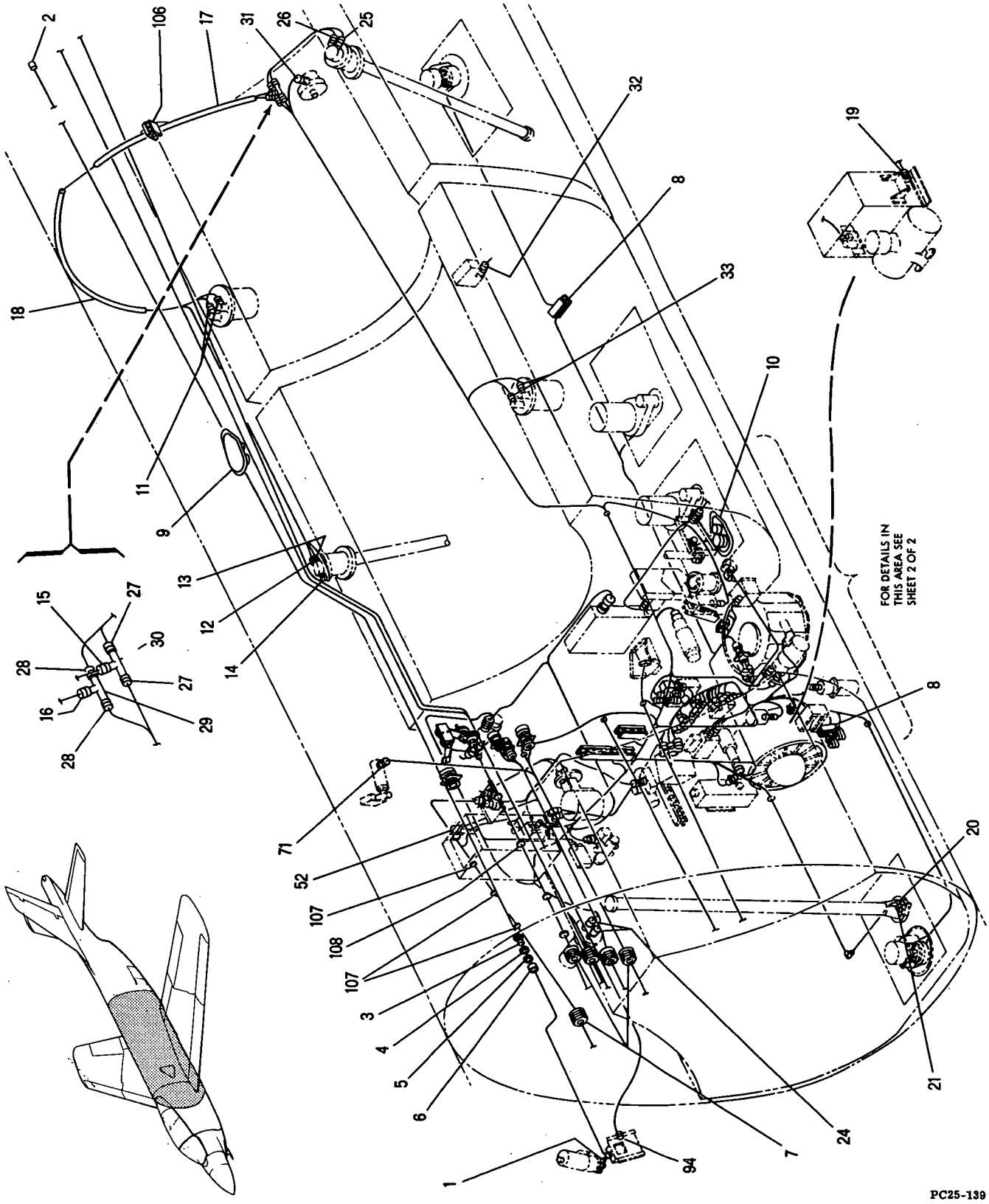

Figure 137 -- Center Fuselage Electrical Wiring Installation (Sheet 1 of 2)

FIGURE & INDEX NUMBER	PART NUMBER	1 2 3 4 5 6 7 DESCRIPTION	UNITS PER ASS'Y	USABLE ON CODE
137 -	UG306/U	• • ADAPTER, USE WITH INDEX 45	1	
	25-79000-157	• BUNDLE ASSEMBLY, WIRE	1	
- 46	163-07	• • PLUG (AVEN) FUEL QUANTITY AMPLIFIER	1	
- 47	163-088	• • PLUG (AVEN) FUEL QUANTITY AMPLIFIER	1	
- 48	163-089	• • JACK (AVEN) FUEL GAGING SYSTEM	1	
- 49	163-027	• • JACK (AVEN) FUEL GAGING SYSTEM	1	
	25-79000-A141	• BUNDLE ASSEMBLY, WIRE	1	A-B
	25-79000-C141	• BUNDLE ASSEMBLY, WIRE	1	C
- 50	AN3106M18-1S	• • PLUG, FUEL QUANTITY AMPLIFIER, USE WITH MS29513-18 O RING	1	
- 51	3106BS10SL3S	• • PLUG (CED) FUEL QUANTITY SIMULATOR, USE WITH MS29513-12 O RING	1	
	25-79000-136	• BUNDLE ASSEMBLY, WIRE	1	
- 52	AN3108M18-4S	• • PLUG, TRANSFORMER RECTIFIER, USE WITH MS29513-18 O RING	1	
	25-79000-135	• BUNDLE ASSEMBLY, WIRE	1	
- 53	AN3100M28-22P	• • RECEPTACLE	1	
- 54	AN3100M18-13P	• • RECEPTACLE	1	
	F271	• • TERMINAL (TOM)	3	
	25-79000- 66	• BUNDLE ASSEMBLY, WIRE	1	A-B
	25-79000-B66	• BUNDLE ASSEMBLY, WIRE	1	C
- 55	AN3100-36-7S	• • RECEPTACLE	1	
- 56	25-77070- 3	• STRAP, AMMETER SHUNT	1	
- 57	25-77070- 5	• STRAP, AMMETER SHUNT	1	
- 58	AN3200-450	• SHUNT	1	
- 59	83761	• STUD ASSEMBLY (AITR)	1	
- 60	83760	• STUD ASSEMBLY (AITR)	1	
		ATTACHING PARTS		
	NAS229-8	• SCREW	8	
	AN960D10L	• WASHER	8	
	AN364-1032	• NUT	8	
		¤----¤-¤-¤----¤		
	25-79000-F220	• BUNDLE ASSEMBLY, WIRE	1	A-B
	25-79000-G220	• BUNDLE ASSEMBLY, WIRE	1	C
- 61	3106BS10SL3S	• • PLUG (CED) LANDING GEAR SELECTOR VALVE, USE WITH MS29513-12 O RING	1	
- 62	3106BS10SL3S	• • PLUG (CED) AIR COMPRESSOR SHUTOFF SWITCH, USE WITH MS29513-12 O RING	1	
- 63	3106BS10SL4S	• • PLUG, (CED) AIR COMPRESSOR SHUTOFF VALVE, USE WITH MS29513-12 O RING	1	
- 64	3106BS12S3S	• • PLUG (CED) FORWARD FUSELAGE TANK PILOT VALVE, USE WITH MS29513-14 O RING	2	
- 65	3106BS14S2S	• • PLUG (CED) UTILITY HYD PRESS. TRANSMITTER, USE WITH MS29513-14 O RING	1	
- 66	AN3100-12S3S	• • RECEPTACLE, AIR SYSTEM SEPARATOR	1	
	GC71T	• • TERMINAL (TOM)	1	
	GC61T	• • TERMINAL (TOM)	1	
- 67	5M7-10-11	• PANEL ASSEMBLY, ELECTRICAL CONNECTOR (MDA)	1	
- 68	5M8-10-11	• COVER, PANEL ASSEMBLY (MDA)	1	
- 69	5M7-10-4	• PANEL ASSEMBLY, ELECTRICAL CONNECTOR (MDA)	1	
- 70	5M8-10-4	• COVER, PANEL ASSEMBLY (MDA)	1	
	25-79000-H216	• BUNDLE ASSEMBLY, WIRE	1	A
	25-79000-J216	• BUNDLE ASSEMBLY, WIRE	1	B
	25-79000-K216	• BUNDLE ASSEMBLY, WIRE	1	C
- 71	3106BS16S8S	• • PLUG (CED) GROUND COOLING VALVE, USE WITH MS29513-16 O RING	1	
- 72	3106BS10SL3S	• • PLUG (CED) FLAP SELECTOR VALVE, USE WITH MS29513-12 O RING	1	
- 73	3106BS14S5S	• • PLUG (CED) FUEL MANIFOLD SHUTOFF VALVE, USE WITH MS29513-14 O RING	1	
- 74	3106BS14S2S	• • PLUG (CED) STARTER AIR VALVE, USE WITH MS29513-14 O RING	1	
- 75	3106BS14S2S	• • PLUG (CED) CONTROL HYD PRESS. TRANSMITTER, USE WITH MS29513-14 O RING	1	
- 76	3106BS14S2S	• • PLUG (CED) USE WITH MS29513-14 O RING	1	
- 77	3106BS14S6S	• • PLUG (CED) USE WITH MS29513-14 O RING	1	
- 78	3106BS14S2S	• • PLUG (CED) PNEU PRESSURE TRANSMITTER, USE WITH MS29513-14 O RING	1	
- 79	AN3100-14S2P	• • RECEPTACLE, POD STARTER VALVE	1	C
	25-79000- 26	• BUNDLE ASSEMBLY, WIRE	1	
- 80	AN3100-14S2P	• • RECEPTACLE	1	
- 81	AN3100M14S6P	• • RECEPTACLE	1	
- 82	AN3100-20-7S	• • RECEPTACLE, FIRE DETECTOR TEST RELAY	1	
- 83	AN3106M16S4S	• • PLUG, FIRE DETECTOR CONTROL UNIT, USE WITH MS29513-16 O RING	1	
- 84	3106BS14S5P	• • PLUG (CED) FIRE DETECTOR CONTROL UNIT, USE WITH MS29513-14 O RING	1	
- 85	3106BS14S7P	• • PLUG (CED) FIRE DETECTOR CONTROL UNIT, USE WITH MS29513-14 O RING	1	

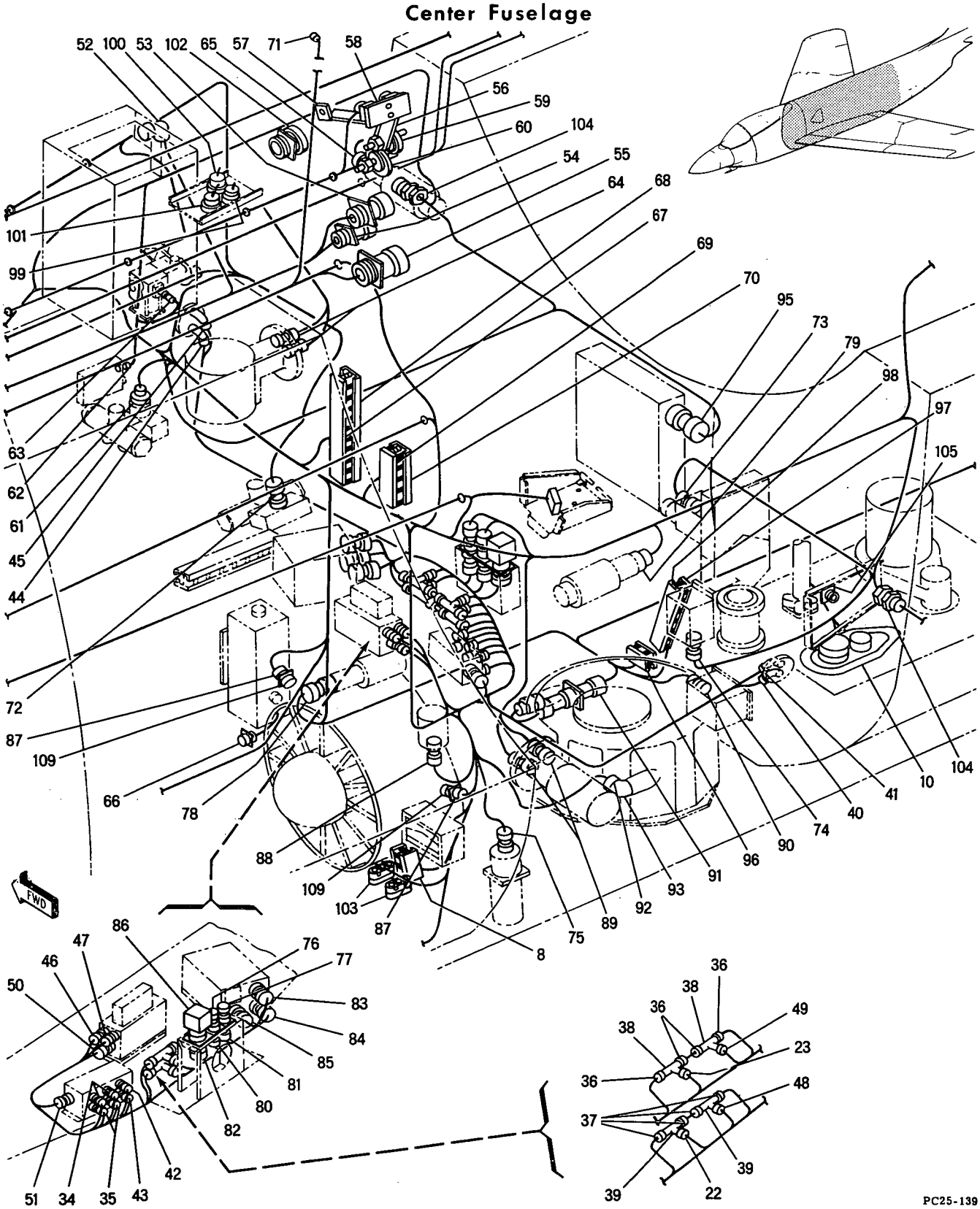

Figure 137 -- Center Fuselage Electrical Wiring Installation (Sheet 2 of 2)

FIGURE & INDEX NUMBER	PART NUMBER	1 2 3 4 5 6 7 DESCRIPTION	UNITS PER ASS'Y	USABLE ON CODE
137 - 86	840505	• RELAY, FIRE DETECTOR TEST (WK)	1	
	25-79000-B199	• BUNDLE ASSEMBLY, WIRE	1	A-B
	25-79000-F199	• BUNDLE ASSEMBLY, WIRE	1	C
- 87	AN3100-18-1S	• • RECEPTACLE	2	
	25-79000-C214	• BUNDLE ASSEMBLY, WIRE	1	A-B
	25-79000-D214	• BUNDLE ASSEMBLY, WIRE	1	C
- 88	3106BS14S2S	• • PLUG (CED) WING FUEL SHUTOFF, USE WITH MS29513-14 O RING	1	
- 89	3106BS12S3S	• • PLUG (CED) LEFT WING TANK PILOT VALVE, USE WITH MS29513-14 O RING	2	
	25-79000-215	• BUNDLE ASSEMBLY, WIRE	1	A-B
	25-79000-A215	• BUNDLE ASSEMBLY, WIRE	1	C-F
- 90	3106BS16S1S	• • PLUG (CED) AUTO PILOT PENDULUM UNIT, USE WITH MS29513-16 O RING	1	
- 91	AN3100-22-14S	• • RECEPTACLF, ARA/25 ANTENNA	1	
- 92	UG21B/U	• • PLUG, ARA/25 ANTENNA	1	
- 93	UG27B/U	• • ADAPTER, ARA/25 ANTENNA	1	
- 94	UG21B/U	• • PLUG, ARA/25 ANTENNA SOLENOID RELAY	1	
- 95	3106BS22-14S	• • PLUG (CED) AUTO PILOT RATE GYRO, USE WITH MS29513-22 O RING	1	
- 96	AN3436-6-1	• BLOCK ASSY, TERMINAL	1	
	25-77088- 3	• SPACER, TERMINAL STRIP, USE WITH INDEX 96	1	
	25-77085- 3	• COVER, TERMINAL STRIP, USE WITH INDEX 96	1	
- 97	5M7-10-10	• PANEL ASSEMBLY, ELECTRICAL CONNECTOR (MDA)	1	
- 98	5M8-10-10	• COVER, PANEL ASSEMBLY (MDA)	1	
	25-79000-134	• BUNDLE ASSEMBLY, WIRE	1	C
- 99	3106BS18-1S	• • PLUG (CED) J71 ENGINE RELAY BOX, USE WITH MS29513-18 O RING	1	C
	25-79000-138	• BUNDLE ASSEMBLY, WIRE	1	C
-100	3106BS22-14S	• • PLUG (CED) J71 ENGINE RELAY BOX, USE WITH MS29513-14 O RING	1	C
-101	3106BS22-14SX	• • PLUG (CED) DUMMY RECEPTACLE STOW, USE WITH MS29513-14 O RING	1	C
-102	AN3100-28-21S	• • RECEPTACLE	1	C
-103	1HS1	• SWITCH (MCS) PRESSURE FUELING CHECK	2	
-104	AN3064-12	• CONNECTOR	2	
	AN3066-12	• NUT, USE WITH INDEX 104	2	
	AN3057-12A	• ADAPTER, USE WITH INDEX 104	2	
-105	2182-17	• RECEPTACLE (CED) STARTER VALVE PLUG DUMMY	1	C
-106	5M7-10-2	• PANEL ASSEMBLY, ELECTRICAL CONNECTOR (MDA)	1	
	5M8-10-2	• COVER, PANEL ASSEMBLY (MDA) USE WITH INDEX 106	1	
-107	25-77001- 3	• GROMMET, ALTERED FROM GOVERNMENT STANDARD PART NO. AN931-12-26	3	
-108	25-77001- 5	• GROMMET, ALTERED FROM GOVERNMENT STANDARD PART NO. AN931A24-28	5	
-109	9760-18	• CAP ASSEMBLY (AMP)	2	
		ATTACHING PARTS		
	AN515-8R7	• SCREW	8	
	AN960D4L	• WASHER	8	
	AN365-440	• NUT	8	
		¤----¤-¤-¤----¤		
	25-79000-145	• BUNDLE ASSEMBLY, WIRE	1	
	GC71-T	• • TERMINAL (TOM)	3	
	AS12450	• • TERMINAL (TOM)	2	
	GC73-T	• • TERMINAL (TOM)	1	
	KC63-T	• • TERMINAL (TOM)	2	
	25-79000-G80	• BUNDLE ASSEMBLY, WIRE	1	A
	25-79000-H80	• BUNDLE ASSEMBLY, WIRE	1	B-F
	25-79000-C137	• BUNDLE ASSEMBLY, WIRE	1	A
	25-79000-D137	• BUNDLE ASSEMBLY, WIRE	1	B-F
	25-79000-307	• BUNDLE ASSEMBLY, WIRE	1	
	25-79000-305	• BUNDLE ASSEMBLY, WIRE	1	
	25-79000-123	• BUNDLE ASSEMBLY, WIRE	1	
	25-79000-303	• BUNDLE ASSEMBLY, WIRE	1	
	25-79000- 2	• BUNDLE ASSEMBLY, WIRE	1	A
	GC71-T	• • TERMINAL (TOM)	1	A
	GC73-T	• • TERMINAL (TOM)	1	A
	25-79000-156	• BUNDLE ASSEMBLY, WIRE	1	A-B
	25-79000-A156	• BUNDLE ASSEMBLY, WIRE	1	C
	25-79000-127	• BUNDLE ASSEMBLY, WIRE	1	A-B
	25-79000-A127	• BUNDLE ASSEMBLY, WIRE	1	C
	GC71-T	• • TERMINAL (TOM)	1	
	GC61-T	• • TERMINAL (TOM)	1	
	25-79000-129	• BUNDLE ASSEMBLY, WIRE	1	A-B
	25-79000-A129	• BUNDLE ASSEMBLY, WIRE	1	C

Aft Fuselage

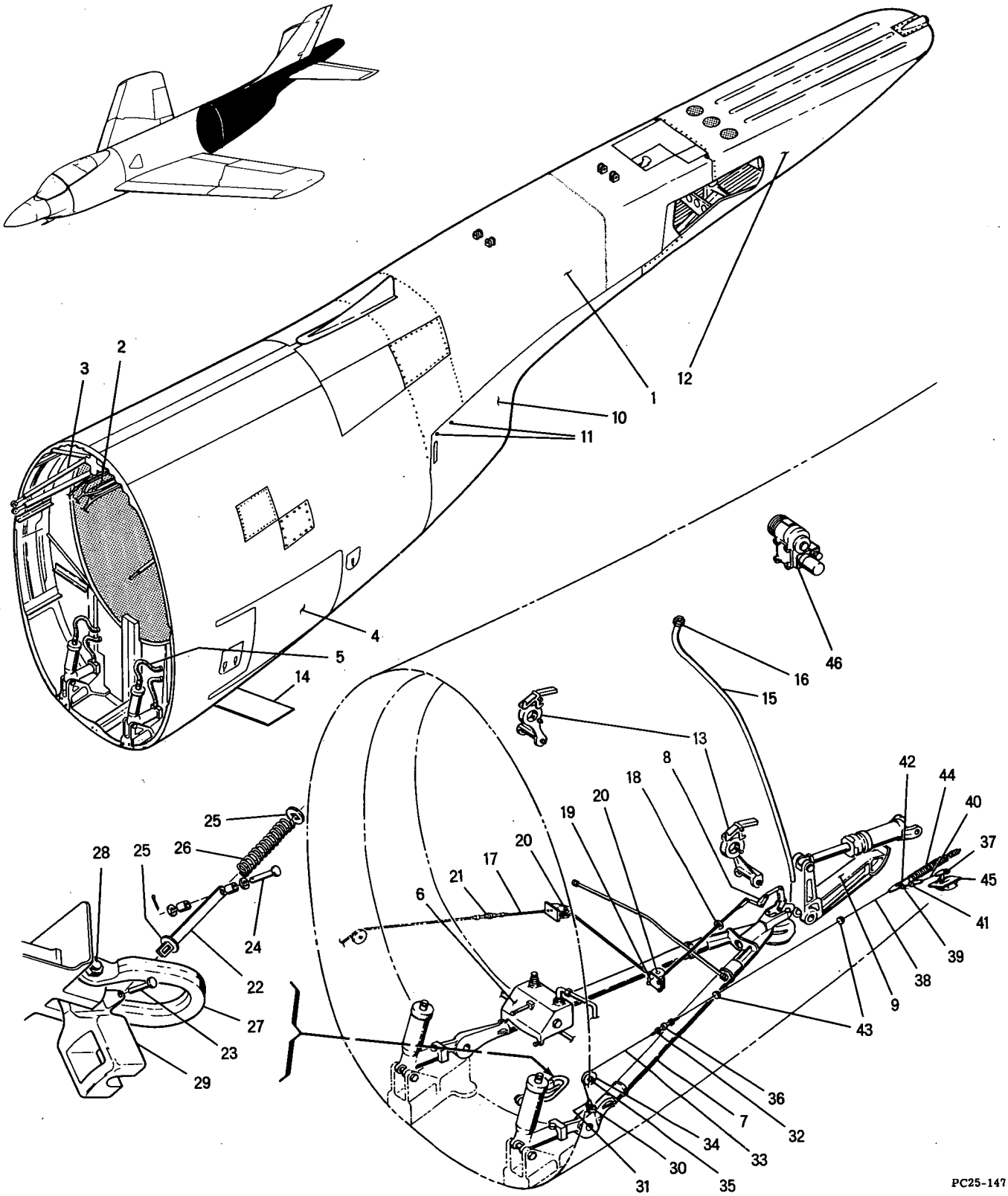

Figure 138 -- Aft Fuselage Installation

FIGURE & INDEX NUMBER	PART NUMBER	1 2 3 4 5 6 7 DESCRIPTION	UNITS PER ASS'Y	USABLE ON CODE
138 -	25-33000- 1	FUSELAGE INSTALLATION, AFT, SEE FIG. 1-11 FOR NEXT HIGHER ASSY	1	A-C
	25-33000-303	FUSELAGE INSTALLATION, AFT, SEE FIG. 1-11 FOR NEXT HIGHER ASSY	1	D-F
	25-33001-301	• FUSELAGE ASSY, AFT	1	A-B
	25-33001-305	• FUSELAGE ASSY, AFT	1	C
	25-33001-307	• FUSELAGE ASSY, AFT	1	D-F
- 1	25-33002-301	• • FUSELAGE ASSEMBLY, AFT STRUCTURAL, SEE FIG. 139	1	A-B
	25-33002-303	• • FUSELAGE ASSEMBLY, AFT STRUCTURAL, SEE FIG. 139	1	C
	25-33002-305	• • FUSELAGE ASSEMBLY, AFT STRUCTURAL, SEE FIG. 139	1	D-F
- 2	25-78000-301	• • WIRING INSTALLATION, AFT FUSELAGE, SEE FIG. 160	1	
- 3	25-61280- 1	• • CONTROLS INSTL, AFT FUS STABILATOR & RUDDER SEE FIG. 146	1	
- 4	25-34001- 1	• • BRAKE INSTALLATION, SPEED LH, SEE FIG. 145	1	
	25-34001- 2	• • BRAKE INSTALLATION, SPEED RH, SEE FIG. 145	1	
- 5	25-69003- 1	• • HYDRAULIC INSTALLATION, AFT FUSELAGE, SEE FIG. 158 & 159	1	
- 6	25-58012- 1	• • TANK INSTALLATION, FUEL DUMP, SEE FIG. 161	1	A-B
	25-58238- 1	• • TANK INSTALLATION, FUEL DUMP, SEE FIG. 162	1	C-F
- 7	25-84010- 1	• • GEAR INSTALLATION, ARRESTING, SEE FIG. 156	1	
- 8	25-84015- 1	• • LATCH INSTL, ARRESTING GEAR, SEE FIG. 156	1	
- 9	25-45500- 1	• • SKID INSTALLATION, TAIL, SEE FIG. 144	1	
	25-33212- 1	• • CONE INSTALLATION, BLAST	1	A-C
	25-33212-301	• • CONE INSTALLATION, BLAST	1	D-F
- 10	25-33225- 1	• • • CONE ASSY, STRUCT BLAST, SEE FIG. 143	1	A-C
	25-33260- 1	• • • CONE ASSY, STRUCT BLAST, SEE FIG. 143	1	D-F
		ATTACHING PARTS		
- 11	AN509-416R14	• • • SCREW	4	
		¤----¤-¤-¤----¤		
- 12	25-33213-301	• • CONE INSTALLATION, TAIL, SEE FIG. 142	1	A-C
	25-33213-303	• • CONE INSTALLATION, TAIL, SEE FIG. 142	1	D-F
- 13	25-50001- 1	• • MOUNT INSTALLATION, ENG AFT, SEE FIG. 164	1	A-B
	25-50001-301	• • MOUNT INSTALLATION, ENG AFT, SEE FIG. 164	1	C-F
- 14	25-58011- 3	• • SYSTEM INSTALLATION, AFT FUS VENT, SEE FIG. 163	1	
	25-78004- 1	• • CONDUIT INSTALLATION, AFT FUSELAGE	1	
- 15	25-78004- 13	• • • CONDUIT	1	A-B
	25-78004- 15	• • • CONDUIT	1	C-F
- 16	AN3064-12	• • • CONNECTOR	1	
	AN3054-12	• • • NUT, USE WITH INDEX 16	1	
	AN3066-12	• • • NUT, LOCK, USE WITH INDEX 16	1	
	AN3053-12	• • • FERRULE, USE WITH INDEX 16	1	
	25-68103- 1	• • CONTROLS INSTL, AFT FUS AUXILIARY	1	
- 17	25-68133- 3	• • • CABLE ASSEMBLY, AUXILIARY CONTROLS	1	
	25-68133- 7	• • • • CABLE	1	
	AN658-3	• • • • TERMINAL, CABLE	1	
	AN666-3RH	• • • • TERMINAL, CABLE	1	
- 18	2DRE1409-4	• • • BUSHING (FN)	1	
- 19	25-68134- 3	• • • BRACKET, ARRESTING GEAR RELEASE PULLEY	1	
- 20	AN219-2	• • • PULLEY	2	
- 21	AN155-16S	• • • BARREL, TURNBUCKLE	1	
	25-84006- 1	• • FITTING INSTALLATION, CATAPULT HOLDBACK	1	
- 22	25-84052- 3	• • • GUIDE, CATAPULT HOLDBACK FITTING RETURN SPRING	1	
		ATTACHING PARTS		
- 23	AN394-23	• • • PIN, FLAT HEAD	1	
	AN960-416L	• • • WASHER	1	
	AN380-2-2	• • • PIN, COTTER	1	
- 24	AN395-49	• • • PIN, FLAT HEAD	1	
	AN960D516	• • • WASHER	2	
	NAS43DD5-30	• • • SPACER	2	
	AN380-3-2	• • • PIN, COTTER	1	
		¤----¤-¤-¤----¤		
- 25	25-84055- 3	• • • WASHER, CATAPULT HOLDBACK RETURN SPRING	2	
- 26	25-84051- 3	• • • SPRING, CATAPULT HOLDBACK FITTING RETURN COMPRESSION	1	
- 27	25-33110- 3	• • • RING, AFT TIE DOWN	1	
		ATTACHING PARTS		
- 28	NAS464-12A48	• • • BOLT	1	
	AN960-1216L	• • • WASHER	4	
	NAS72-12-008	• • • BUSHING	2	
	AN364-1216	• • • NUT	1	
		¤----¤-¤-¤----¤		

FIGURE & INDEX NUMBER	PART NUMBER	1 2 3 4 5 6 7 DESCRIPTION	UNITS PER ASS'Y	USABLE ON CODE
138 - 29	25-84003- 1	• • • FITTING ASSEMBLY, CATAPULT HOLDBACK	1	
	BSSR12000	• • • • BEARING (SWPC)	1	
	25-49001- 1	• • RELEASE INSTALLATION, TOW TARGET	1	
	AN393-21	• • • PIN, FLAT HEAD, CABLE GUARD	3	
	AN380-2-2	• • • PIN, COTTER	3	
	25-49004- 1	• • • CABLE ASSY, TOW TARGET FWD	1	
		ATTACHING PARTS		
- 30	AN23-12	• • • BOLT	1	
	AN960-10	• • • WASHER	2	
	AN310-3	• • • NUT	1	
	AN380-2-2	• • • PIN, COTTER	1	
		¤----¤-¤-¤----¤		
- 31	25-49053- 3	• • • • TERMINAL, TOW TARGET RELEASE CABLE	1	
	AN664C2	• • • • TERMINAL, USE WITH INDEX 31	1	
- 32	AN666-2LH	• • • • TERMINAL	1	
- 33	25-49004- 3	• • • • CABLE	1	
- 34	AN219-2	• • • PULLEY	1	
		ATTACHING PARTS		
- 35	AN24-15	• • • BOLT	1	
	AN960D416	• • • WASHER	1	
	AN960D416L	• • • WASHER	1	
	AN310-4	• • • NUT	1	
	AN380-2-3	• • • PIN, COTTER	1	
		¤----¤-¤-¤----¤		
- 36	AN155-8S	• • • BARREL, TURNBUCKLE	1	
	25-49052- 1	• • • CABLE ASSY, TOW TARGET AFT	1	
		ATTACHING PARTS		
- 37	AN23-10	• • • BOLT	1	
	AN960-10L	• • • WASHER	1	
	AN960-10	• • • WASHER	1	
	AN320-3	• • • NUT	1	
	AN380-2-2	• • • PIN, COTTER	1	
		¤----¤-¤-¤----¤		
- 38	NAS302-02-0471	• • • • CABLE ASSY	1	
		ATTACHING PARTS		
- 39	AN23-9	• • • • BOLT	1	
	AN960-10L	• • • • WASHER	1	
	AN960-10	• • • • WASHER	1	
	AN310-3	• • • • NUT	1	
		¤----¤-¤-¤----¤		
- 40	NAS302-23-0710	• • • • CABLE ASSY	1	
		ATTACHING PARTS		
- 41	AN23-9	• • • • BOLT	1	
	AN960-10L	• • • • WASHER	1	
	AN960-10	• • • • WASHER	1	
	AN310-3	• • • • NUT	1	
		¤----¤-¤-¤----¤		
- 42	25-49054- 3	• • • • LINK, TOW TARGET RELEASE AFT CABLE	1	
- 43	3DRE1409-4	• • • BUSHING (FN)	2	
- 44	25-49055- 3	• • • SPRING, TOW TARGET RELEASE EXTENSION	1	
- 45	103TTR	• • • RELEASE ASSEMBLY (HBDI)	1	
		ATTACHING PARTS		
	AN509-10R12	• • • SCREW	6	
	AN960D10L	• • • WASHER	6	
	AN960D10	• • • WASHER	6	
	AN365-1032	• • • NUT	6	
		¤----¤-¤-¤----¤		
- 46	25-61280- 3	• SERVO INSTALLATION, AFT FUSELAGE RUDDER & STABILATOR, SEE FIG. 146	1	

FIGURE & INDEX NUMBER	PART NUMBER	1 2 3 4 5 6 7 DESCRIPTION	UNITS PER ASS'Y	USABLE ON CODE
139 -	25-33002-301	FUSELAGE ASSEMBLY, AFT STRUCTURAL, SEE FIG. 138-1 FOR NEXT HIGHER ASSEMBLY	REF	A-B
	25-33002-303	FUSELAGE ASSEMBLY, AFT STRUCTURAL, SEE FIG. 138-1 FOR NEXT HIGHER ASSEMBLY	REF	C
	25-33002-305	FUSELAGE ASSEMBLY, AFT STRUCTURAL, SEE FIG. 138-1 FOR NEXT HIGHER ASSEMBLY	REF	D-F
- 1	25-33048- 1	. PANEL ASSY, AFT FUS LOWER STRUCT, SEE FIG. 141	1	A-B
	25-33048-301	. PANEL ASSY, AFT FUS LOWER STRUCT, SEE FIG. 141	1	C-F
- 2	25-33047-301	. PANEL ASSY, AFT FUS UPPER AFT STRUCT, SEE FIG. 140	1	A-B
	25-33047-303	. PANEL ASSY, AFT FUS UPPER AFT STRUCT, SEE FIG. 140	1	C
	25-33047-305	. PANEL ASSY, AFT FUS UPPER AFT STRUCT, SEE FIG. 140	1	D-F
- 3	25-33051- 1	. PANEL ASSY, AFT FUS UPPER FORWARD STRUCTURAL	1	A-B
	25-33051-301	. PANEL ASSY, AFT FUS UPPER FORWARD STRUCTURAL	1	C
- 4	25-33027- 3	. . FITTING, TOP CENTER LONGERON TRACK SPLICE	1	A-C
- 5	25-33073- 1	. . DOOR ASSY, ELECTRIC & HYDRAULIC ACCESS LH	1	
- 6	25-33073- 2	. . DOOR ASSY, ELFCTRIC & HYDRAULIC ACCESS RH	1	
		ATTACHING PARTS		
- 7	AN509-416R12	. . SCREW	30	
- 8	AN253-5-3445	. . PIN, HINGE	2	
- 9	AN253-5-2800	. . PIN, HINGE	2	
		¤----¤-¤-¤----¤		
- 10	98265-1-.150	. . . STUD (MKL) USE WITH 99947P.130 RECP (MKL)	20	
	99836	. . . PIN, CROSS (MKL)	20	
- 11	25-33073- 7	. . . HINGE, HALF LH, ALTERED FROM 9M83HY2A6406 (MDA)	1	
- 12	25-33073- 8	. . . HINGE, HALF RH, ALTERED FROM 9M83HY2A6406 (MDA)	1	
- 13	25-33114- 3	. . . STOP, HINGE PIN	1	
		ATTACHING PARTS		
- 14	AN509-10R11	. . . SCREW	2	
	AN960-10	. . . WASHER	2	
	AN365-1032	. . . NUT	2	
		¤----¤-¤-¤----¤		
- 15	25-33064- 1	. . LONGERON ASSEMBLY, TOP CENTER	1	A-C
- 16	25-33210- 3	. . DOOR, HYDRAULIC TROUGH ACCESS	1	
		ATTACHING PARTS		
- 17	AN3-5A	. . BOLT	26	
	AN960D10	. . WASHER	26	
		¤----¤-¤-¤----¤		
- 18	25-33174- 1	. . TUBE ASSY, ELECTRIC & HYD WELL DRAIN LH	1	
- 19	25-33174- 2	. . TUBE ASSY, ELECTRIC & HYD WELL DRAIN RH	1	
	25-33007- 3	. . FRAME ASSEMBLY	1	A-C
- 20	25-33078- 3	. . . FITTING, FEEL SYSTEM & TRACK ATTACHMENT	1	
- 21	25-33096- 1	. . DOOR ASSEMBLY, CONTROL ACCESS LH	1	
- 22	25-33096- 2	. . DOOR ASSEMBLY, CONTROL ACCESS RH	1	
		ATTACHING PARTS		
- 23	AN509-416R13	. . SCREW	110	
		¤----¤-¤-¤----¤		
- 24	25-33098- 1	. . DOOR ASSEMBLY, CONTROL ACCESS LH	1	
- 25	25-33098- 2	. . DOOR ASSEMBLY, CONTROL ACCESS RH	1	
		ATTACHING PARTS		
- 26	AN509-416R12	. . SCREW	54	
		¤----¤-¤-¤----¤		
- 27	25-32214- 1	. . . CHAIN ASSEMBLY, CONTROLS ACCESS DOOR	1	
- 28	RS102	. . . . LINK (RYY)	1	
- 29	RS109	. . . . SWIVEL (RYY)	1	
- 30	NAF1088-1A4	. . . . CHAIN	1	
- 31	25-33189- 1	. . DOOR ASSEMBLY, QUICK ACCESS INSPECTION	3	
- 32	25-33097- 1	. DOOR ASSEMBLY, ENGINE MOUNT ACCESS LH	1	
- 33	25-33097- 2	. DOOR ASSEMBLY, ENGINE MOUNT ACCESS RH	1	
- 34	9M68B365-440 #	. . BUSHING ASSEMBLY (MDA) USE WITH 25-32319-3, 9M73-1-064, 9M73-1-040 SPACERS (MDA) & 99947P.130 RECEPTACLE (MKL)	9	
	9M70B3	. . WASHER (MDA)	9	
	9M61B1	. . RING, WASHER RETAINER (MDA)	9	
- 35	9M68B365-440 #	. . BUSHING ASSEMBLY (MDA) USE WITH 25-32319-3, 9M73-1-064, 9M73-1-012 SPACERS (MDA) & 99947P.130 RECEPTACLE (MKL)	1	
	9M70B3	. . WASHER (MDA)	1	
	9M61B1	. . RING, WASHER RETAINER (MDA)	1	
- 36	9M68B365-440 #	. . BUSHING ASSEMBLY (MDA) USE WITH 25-32319-3, 9M73-1-064, 9M73-1-020 SPACERS (MDA) & 99947P.130 RECEPTACLE (MKL)	2	
	# SEE AN 01-245FC-3 FOR METHOD OF REPLACEMENT.			

Aft Fuselage

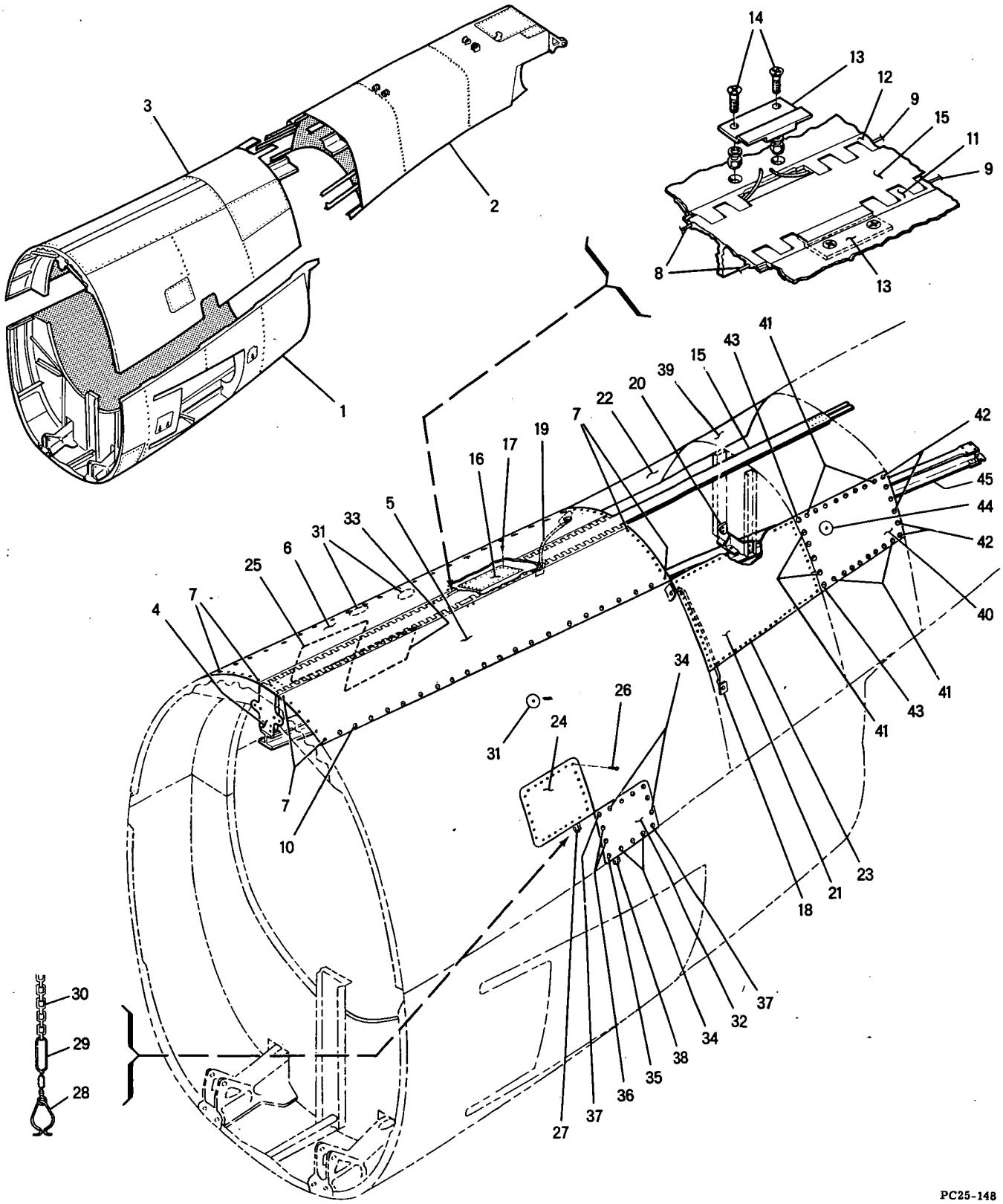

Figure 139 - Aft Structural Fuselage Assembly

FIGURE & INDEX NUMBER	PART NUMBER	1 2 3 4 5 6 7 DESCRIPTION	UNITS PER ASS'Y	USABLE ON CODE
139 -	9M70B3	• • WASHER (MDA)	2	
	9M61B1	• • RING, WASHER RETAINER (MDA)	2	
- 37	9M68B365-440 #	• • BUSHING ASSEMBLY (MDA) USE WITH 25-32319-3, 9M73-1-051 SPACERS (MDA) & 99947P.130 RECEPTACLE (MKL)	2	
	9M70B3	• • WASHER (MDA)	2	
	9M61B1	• • RING, WASHER RETAINER (MDA)	2	
- 38	25-32214- 1	• • CHAIN ASSEMBLY, ENGINE MOUNT ACCESS DOOR	1	
	RS102	• • • LINK (RYY)	1	
	RS109	• • • SWIVEL (RYY)	1	
	NAF1088-1A4	• • • CHAIN	1	
- 39	25-33095- 1	• DOOR ASSEMBLY, CONTROL ACCESS RH, RIGHT SIDE	1	
- 40	25-33095- 2	• DOOR ASSEMBLY, CONTROL ACCESS LH, LEFT SIDE	1	
- 41	9M68B435-510 #	• • BUSHING ASSEMBLY (MDA) USE WITH 25-32319-3, 9M73-1-012 (MDA) SPACERS, 1 EA, 9M73-1-064 (MDA) SPACERS, 2 EA & 99947P.130 RECEPTACLE (MKL)	20	
	9M70B3	• • WASHER (MDA)	20	
	9M61B1	• • RING, WASHER RETAINER (MDA)	20	
- 42	9M68B435-510 #	• • BUSHING ASSEMBLY (MDA) USE WITH 25-32319-3, 9M73-1-064, 9M73-1-051 SPACERS (MDA) & 99947P.130 RECEPTACLE (MKL)	6	
	9M70B3	• • WASHER (MDA)	6	
	9M61B1	• • RING, WASHER RETAINER (MDA)	6	
- 43	9M68B435-510 #	• • BUSHING ASSEMBLY (MDA) USE WITH 25-32319-3, 9M73-1-064, 9M73-1-012 SPACERS (MDA) & 99947P.130 RECEPTACLE (MKL)	2	
	9M70B3	• • WASHER (MDA)	2	
	9M61B1	• • RING, WASHER RETAINER (MDA)	2	
- 44	25-33189-6301	• • DOOR ASSEMBLY, QUICK ACCESS INSPECTION	1	
	25-33055- 1	• TRACK INSTALLATION, AFT FUS ENGINE REMOVAL	1	
- 45	25-33055- 3	• • TRACK	1	
	25-33055- 5	• • SHIM, FORWARD	1	

SEE AN 01-245FC-3 FOR METHOD OF REPLACEMENT.

Aft Fuselage

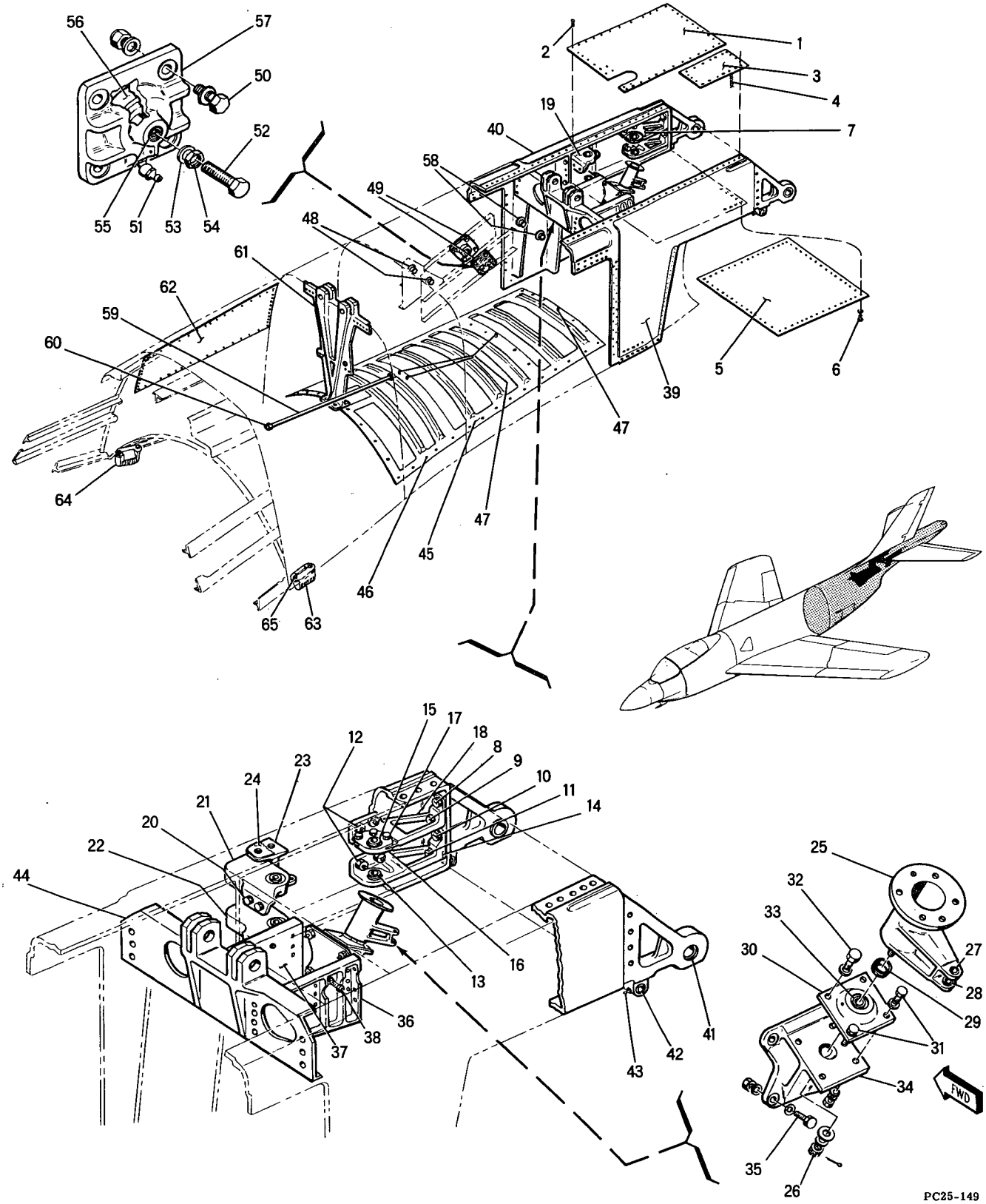

Figure 140 -- Aft Fuselage Upper Aft Structural Panel Assembly

FIGURE & INDEX NUMBER	PART NUMBER	1 2 3 4 5 6 7 DESCRIPTION	UNITS PER ASS'Y	USABLE ON CODE
140 -	25-33047-301	PANEL ASSY, AFT FUSELAGE UPPER AFT STRUCTURAL SEE FIG. 139-2 FOR NEXT HIGHER ASSEMBLY	REF	A-B
	25-33047-303	PANEL ASSY, AFT FUSELAGE UPPER AFT STRUCTURAL SEE FIG. 139-2 FOR NEXT HIGHER ASSEMBLY	REF	C
	25-33047-305	PANEL ASSY, AFT FUSELAGE UPPER AFT STRUCTURAL SEE FIG. 139-2 FOR NEXT HIGHER ASSEMBLY	REF	D-F
- 1	25-33101- 1	. DOOR ASSEMBLY, RUDDER BELL CRANK ACCESS	1	
		ATTACHING PARTS		
- 2	AN509-416R13	. SCREW	44	
		¤----¤-¤-¤----¤		
- 3	25-33102- 1	. DOOR ASSEMBLY, STABILATOR CONTROL UPPER	1	A-B
		ATTACHING PARTS		
	AN509-416R12	. SCREW	22	
		¤----¤-¤-¤----¤		
- 4	25-32214- 1	. . CHAIN ASSY, ACCESS DOOR SAFETY	1	A-B
	RS102	. . . LINK (RYY)	1	A-B
	RS109	. . . SWIVEL (RYY)	1	A-B
	NAF1088-1A4	. . . CHAIN	1	A-B
- 5	25-33077- 1	. DOOR ASSEMBLY, CONTROL SYSTEM ACCESS	1	
		ATTACHING PARTS		
- 6	NAS229-12	. SCREW	60	
	AN960D10	. WASHER	60	
		¤----¤-¤-¤----¤		
- 7	25-61287- 1	. SUPPORT ASSEMBLY, RUDDER VISCOUS DAMPER	1	
		ATTACHING PARTS		
- 8	NAS464-4A11	. BOLT	1	
	AN960D416L	. WASHER	1	
	AN960D416	. WASHER	1	
	AN364-428	. NUT	1	
- 9	NAS464-4A12	. BOLT	1	
	AN960D416L	. WASHER	1	
	AN960D416	. WASHER	2	
	AN364-428	. NUT	1	
- 10	NAS464-4A11	. BOLT	1	
	AN960D416L	. WASHER	1	
	AN960D416	. WASHER	2	
	AN364-428	. NUT	1	
- 11	NAS464-4A25	. BOLT	1	
	AN960D416	. WASHER	3	
	AN364-428	. NUT	1	
- 12	3M20RA10	. BOLT, (MDA)	5	
	AN960D416	. WASHER	10	
	AN364-428	. NUT	5	
		¤----¤-¤-¤----¤		
	25-61287- 3	. . SUPPORT ASSEMBLY	1	
	NAS497	. . . FITTING, LUB	1	
- 13	BLN10003G-C	. . . BEARING (SWPC)	1	
- 14	25-61291- 3	. . . SUPPORT, RUDDER VISCOUS DAMPER BOTTOM	1	
	25-61287- 5	. . SUPPORT ASSEMBLY	1	
	NAS497	. . . FITTING, LUB	1	
- 15	BLN10003G-C	. . . BEARING (SWPC)	1	
- 16	25-61288- 3	. . . FITTING, RUDDER VISCOUS DAMPER SUPPORT	1	
		ATTACHING PARTS		
- 17	NAS464-4A9	. . . BOLT	3	
	AN960D416L	. . . WASHER	3	
	AN960D416	. . . WASHER	3	
	AN364-428	. . . NUT	3	
		¤----¤-¤-¤----¤		
- 18	25-61289- 3	. . . SUPPORT, RUDDER VISCOUS DAMPER TOP	1	
- 19	25-61396- 11	. SUPPORT ASSEMBLY, RUDDER CONTROL BELL CRANK	1	
		ATTACHING PARTS		
- 20	NAS464-4A7	. BOLT, FORWARD & AFT	6	
	AN960D416L	. WASHER	6	
	AN960D416	. WASHER	12	
	AN364-428	. NUT	6	
	3M20RA10	. BOLT (MDA) INBOARD & OUTBOARD	4	
	AN960D416	. WASHER	8	
	AN364-428	. NUT	4	
		¤----¤-¤-¤----¤		
- 21	25-61396- 13	. . SUPPORT ASSEMBLY	1	
	AN206DSP6	. . . BEARING	1	
- 22	25-61396- 15	. . SUPPORT ASSEMBLY	1	
	AN206DSP6	. . . BEARING	1	

FIGURE & INDEX NUMBER	PART NUMBER	1 2 3 4 5 6 7 DESCRIPTION	UNITS PER ASS'Y	USABLE ON CODE
140 - 23	25-33172- 3	• FITTING, RUDDER DAMPER SUPPORT	1	
- 24	25-33047- 79	• SHIM	AR	
	25-33195- 1	• SUPPORT INSTALLATION, RUDDER HORN	1	
- 25	25-24017- 1	• • HORN ASSY, RUDDER	1	
		ATTACHING PARTS		
- 26	AN320-6	• • NUT	1	
	4M36-03002	• • WASHER (MDA)	1	
	AN960-616L	• • WASHER	1	
	AN380-3-3	• • PIN, COTTER	1	
		¤----¤-¤-¤----¤		
- 27	25-21043- 11	• • • BUSHING, PLAIN EMPENNAGE	1	
- 28	4M34-5-18	• • • BUSHING (MDA)	1	
- 29	25-33092- 3	• • SPACER, RUDDER HINGE SUPPORT	1	
- 30	25-33086- 1	• • HOUSING ASSEMBLY, RUDDER HINGE SUP. BEARING	1	
		ATTACHING PARTS		
- 31	AN4-7A	• • BOLT	2	
	AN960-416L	• • WASHER	4	
	AN960-416	• • WASHER	2	
	AN364-428	• • NUT	2	
- 32	AN4-7A	• • BOLT	2	
	AN960-416L	• • WASHER	2	
		¤----¤-¤-¤----¤		
	NAS497	• • • FITTING, LUB	1	
- 33	LSS10	• • • BEARING (HEC)	1	
- 34	25-33081- 1	• • FITTING ASSEMBLY, FUS RUDDER BEARING SUP.	1	
		ATTACHING PARTS		
- 35	AN4-11A	• • BOLT	4	
	AN960-416L	• • WASHER	4	
	AN960-416	• • WASHER	4	
	AN365-428	• • NUT	4	
		¤----¤-¤-¤----¤		
- 36	25-83087- 1	• FITTING ASSEMBLY, STABILATOR DAMPER SUPPORT LH	1	A-B
	25-33279- 1	• FITTING ASSEMBLY, STABILATOR DAMPER SUPPORT LH	1	C-F
- 37	25-83087- 2	• FITTING ASSEMBLY, STABILATOR DAMPER SUPPORT RH	1	A-B
	25-33282- 1	• FITTING ASSEMBLY, STABILATOR DAMPER SUPPORT RH	1	C-F
- 38	NAS428H4-7	• • BOLT	1	A-B
	NAS428-4-7	• • BOLT	1	C-F
	AN960D416	• • WASHER	1	
	AN316-4R	• • NUT	1	
	1191-4CNX1/4	• • INSERT (AF)	1	
- 39	25-33028-301	• FITTING ASSY, HORIZONTAL STAB. ATTACHMENT LH	1	A-B
	25-33028-303	• FITTING ASSY, HORIZONTAL STAB. ATTACHMENT LH	1	C-F
- 40	25-33028-302	• FITTING ASSY, HORIZONTAL STAB. ATTACHMENT RH	1	A-B
	25-33028-304	• FITTING ASSY, HORIZONTAL STAB. ATTACHMENT RH	1	C-F
- 41	4M34P20-114	• • BUSHING (MDA)	1	
- 42	4M33-14-012	• • BUSHING (MDA)	2	
- 43	MS15001-4	• • FITTING, LUB	1	
	25-33018- 1	• BULKHEAD ASSEMBLY	1	A-B
	25-33018-301	• BULKHEAD ASSEMBLY	1	C-F
- 44	25-33207- 3	• • FITTING, REAR SPAR ATTACHMENT FIN	1	
- 45	25-33071- 1	• DOOR ASSEMBLY, CONTROL SYSTEM ACCESS	1	
		ATTACHING PARTS		
- 46	AN4-6A	• BOLT	50	
	AN960D416	• WASHER	50	
- 47	AN509-416R12	• SCREW	4	
		¤----¤-¤-¤----¤		
	25-33041-301	• SUPPORT ASSEMBLY, RUDDER POWER CYLINDER STRUCTURE	1	A-B
	25-33041-303	• SUPPORT ASSEMBLY, RUDDER POWER CYLINDER STRUCTURE	1	C-F.
- 48	AN218P4	• • BEARING	2	
- 49	25-61348- 3	• • FITTING ASSY, RUDDER POWER CYLINDER	2	
		ATTACHING PARTS		
- 50	NAS464-4A6	• • BOLT	8	
	AN960D416L	• • WASHER	8	
	AN960D416	• • WASHER	8	
	AN364-428	• • NUT	8	
		¤----¤-¤-¤----¤		
- 51	AN944-201	• • • FITTING, LUB	1	
- 52	NAS428H4-12	• • • BOLT, ADJUSTING	1	
- 53	AN960D416	• • • WASHER	1	
- 54	AN316-4R	• • • NUT	1	
- 55	R2065B8	• • • INSERT (ROSN)	1	
	RL285B8	• • • RING, LOCK (ROSN)	1	

FIGURE & INDEX NUMBER	PART NUMBER	1 2 3 4 5 6 7 DESCRIPTION	UNITS PER ASS'Y	USABLE ON CODE
140 - 56	BSR12000G-C	• • • BEARING (SWPC)	1	
- 57	25-61348- 7	• • • FITTING	1	
	25-33043- 1	• BRACKET ASSEMBLY, RUDDER BELL CRANK	1	A-B
	25-33043-301	• BRACKET ASSEMBLY, RUDDER BELL CRANK	1	C-F
- 58	AN218P5	• • BEARING	2	
	25-78004- 5	• CONDUIT INSTALLATION, AFT FUSELAGE	1	
- 59	25-78004- 11	• • CONDUIT	1	
- 60	AN3064-16	• • CONNECTOR	2	
	AN3054-12	• • NUT, USE WITH INDEX 60	2	
	AN3066-12	• • NUT, LOCK, USE WITH INDEX 60	2	
	AN3053-12	• • FERRULE, USE WITH INDEX 60	2	
	25-33017- 1	• BULKHEAD ASSEMBLY	1	
- 61	25-33025- 5	• • FITTING, FRONT SPAR ATTACHMENT FIN	1	
- 62	25-33094- 1	• DOOR ASSEMBLY, CONTROL SYSTEM ACCESS	1	
		ATTACHING PARTS		
	AN509-416R12	• SCREW	54	
		¤----¤-¤-¤----¤		
- 63	25-33278- 3	• FITTING, BLAST CONE LH	1	
- 64	25-33278- 4	• FITTING, BLAST CONE RH	1	
		ATTACHING PARTS		
- 65	AN4-7A	• BOLT	4	
	AN960D416L	• WASHER	4	
	AN960D416	• WASHER	4	
	AN365-428	• NUT	4	
		¤----¤-¤-¤----¤		

Aft Fuselage

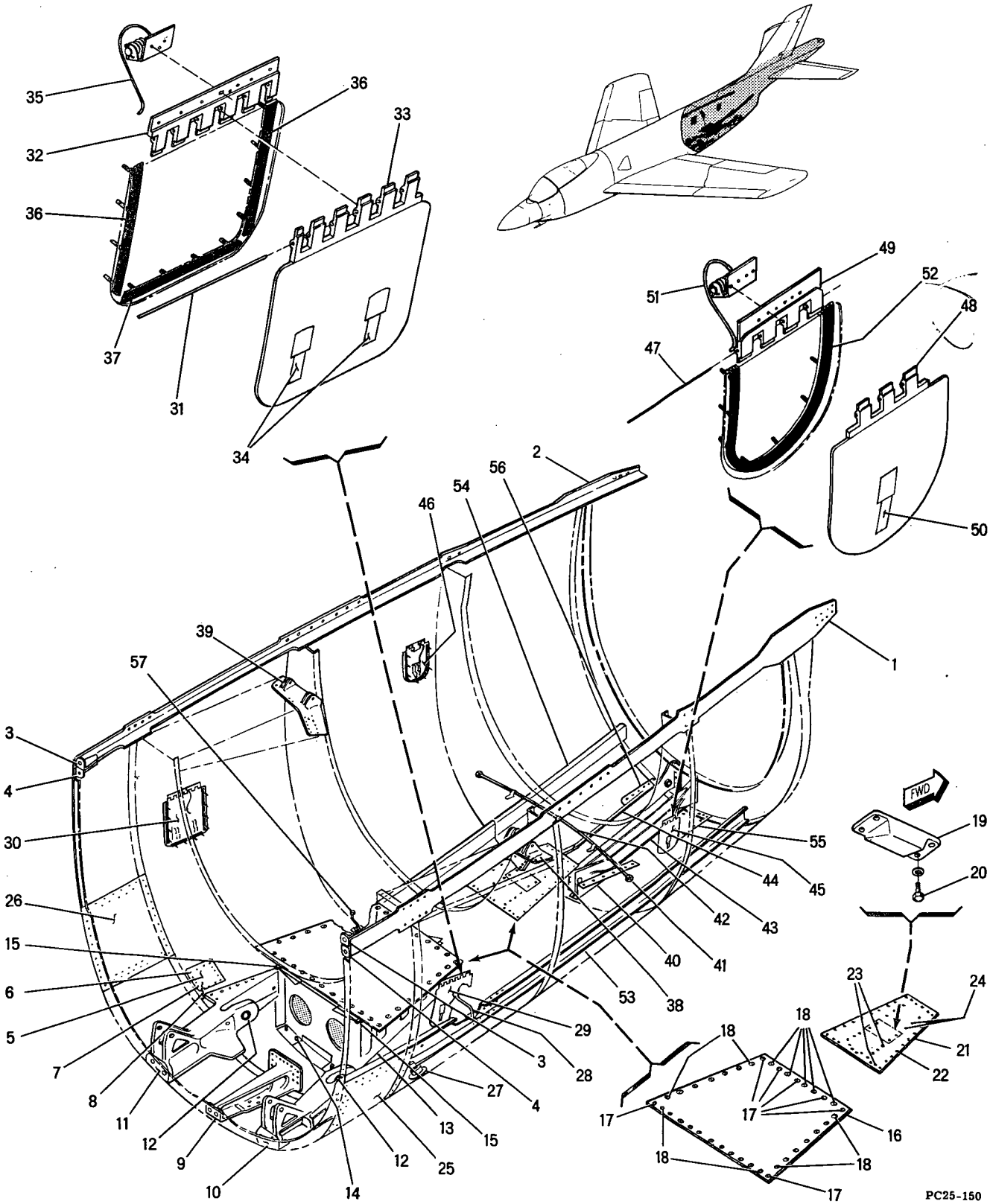

Figure 141 -- Aft Fuselage Lower Structural Panel Assembly

FIGURE & INDEX NUMBER	PART NUMBER	1 2 3 4 5 6 7 DESCRIPTION	UNITS PER ASS'Y	USABLE ON CODE
141 -	25-33048- 1	PANEL ASSEMBLY, AFT FUSELAGE LOWER STRUCTURAL, SEE FIG. 139-1 FOR NEXT HIGHER ASSY	REF	A-B
	25-33048-301	PANEL ASSEMBLY, AFT FUSELAGE LOWER STRUCTURAL, SEE FIG. 139-1 FOR NEXT HIGHER ASSY	REF	C-F
	25-33022- 1	. LONGERON ASSEMBLY, CENTER LH	1	
	25-33022- 2	. LONGERON ASSEMBLY, CENTER RH	1	
- 1	25-33022- 3	. . LONGERON LH, MAKE FROM 25-33093-3	1	
- 2	25-33022- 4	. . LONGERON RH, MAKE FROM 25-33093-4	1	
- 3	25-33049- 5	. FITTING, AFT FUSELAGE CENTER LONGERON UPPER SPLICE	1	A-B
	25-33149- 3	. FITTING, AFT FUSELAGE CENTER LONGERON UPPER SPLICE	2	C-F
- 4	25-33029- 5	. FITTING, AFT FUSELAGE CENTER LONGERON LOWER SPLICE	1	A-B
	25-33123- 3	. FITTING, AFT FUSELAGE CENTER LONGERON LOWER SPLICE	2	C-F
- 5	25-33099- 1	. DOOR ASSY, ARRESTING GEAR HINGE PIN ACCESS LH	1	
	25-33099- 2	. DOOR ASSY, ARRESTING GEAR HINGE PIN ACCESS RH	1	
		ATTACHING PARTS		
- 6	AN509-10R14	. SCREW	24	
- 7	AN509-416R16	. SCREW	2	
		¤----¤-¤-¤----¤		
- 8	25-32214-' 1	. . CHAIN ASSY, ARRESTING GEAR HINGE PIN ACCESS SAFETY	1	
	NAF1088-1A4	. . . CHAIN	1	
	RS109	. . . SWIVEL (RYY)	1	
	RS102	. . . LINK (RYY)	1	
- 9	25-33046- 1	. FITTING ASSEMBLY, CATAPULT HOLDBACK SUPPORT	1	
	A1663-012-3	. . CATCH (TIN)	2	
- 10	25-33031- 1	. FITTING, AFT FUSELAGE LOWER LONGERON SPLICE LH	1	
- 11	25-33031- 2	. FITTING, AFT FUSELAGE LOWER LONGERON SPLICE RH	1	
- 12	25-33083- 3	. . BUSHING, AFT FUSELAGE LOWER LONGERON SPLICE FITTING	2	
	25-33058- 1	. TROUGH ASSEMBLY, ARRESTING HOOK	1	A-B
	25-33058-301	. TROUGH ASSEMBLY, ARRESTING HOOK	1	C-F
- 13	25-33106- 1	. . FAIRING ASSEMBLY, ARRESTING GEAR REMOVABLE	1	
- 14	98265-1-150	. . . STUD (MKL) USE WITH 99833P.130 RECEPTACLE (MKL)	7	
	99836	. . . PIN (MKL)	7	
- 15	25-33106- 15	. . . SEAL, SELECTED FROM 11M600 (MDA)	2	
- 16	25-33080- 1	. . DOOR ASSEMBLY, ARRESTING GEAR TROUGH	1	
- 17	9M60B5	. . . BUSHING ASSY (MDA) USE WITH 9M62A1 RECEPTACLE (MDA)	7	
	9M70B2	. . . WASHER (MDA)	7	
	9M61B1	. . . RING, WASHER RETAINER (MDA)	7	
- 18	9M60B3	. . . BUSHING ASSY (MDA) USE WITH 9M62A1 RECEPTACLE (MDA)	30	
	9M70B2	. . . WASHER (MDA)	30	
	9M61B1	. . . RING, WASHER RETAINER (MDA)	30	
- 19	25-33182- 3	. . BUMPER, ARRESTING GEAR	1	
		ATTACHING PARTS		
- 20	AN5-10A	. . BOLT	4	
	AN960D516	. . WASHER	4	
		¤----¤-¤-¤----¤		
- 21	25-33183- 1	. . DOOR, ARRESTING GEAR LATCH ACCESS	1	
		ATTACHING PARTS		
- 22	AN4-7A	. . BOLT	24	
	AN960D416L	. . WASHER	24	
- 23	AN3-5A	. . BOLT	18	
	AN960D10	. . WASHER	18	
- 24	AN509-10R11	. . SCREW	4	
		¤----¤-¤-¤----¤		
- 25	25-33100- 3	. DOOR, ARRESTING GEAR ACTUATOR ACCESS LH	1	
- 26	25-33100- 4	. DOOR, ARRESTING GEAR ACTUATOR ACCESS RH	1	
		ATTACHING PARTS		
	AN509-416R15	. SCREW	136	
		¤----¤-¤-¤----¤		
- 27	25-58186-. 3	. FITTING, DUMP TANK DRAIN VALVE	1	
	25-58191- 3	. GASKET, TANK DRAIN VALVE FITTING, USE WITH INDEX 27	1	
- 28	25-58114- 1	. TUBE ASSEMBLY, ENGINE SCUPPER DRAIN	1	
	AN818-4D	. . NUT	1	
	AN819-4D	. . SLEEVE, COUPLING	1	
	25-33205- 1	. DOOR ASSEMBLY, ARRESTING GEAR CHARGE VALVE ACCESS LH	1	
	25-33205- 2	. DOOR ASSEMBLY, ARRESTING GEAR CHARGE VALVE ACCESS RH	1	

FIGURE & INDEX NUMBER	PART NUMBER	1 2 3 4 5 6 7 DESCRIPTION	UNITS PER ASS'Y	USABLE ON CODE
141 - 29	25-33205- 3	• • DOOR ASSEMBLY LH	1	
- 30	25-33205- 4	• • DOOR ASSEMBLY RH	1	
- 31	AN253-5-546	• • • PIN, HINGE	1	
- 32	25-33205- 11	• • • HINGE, HALF, ALTERED FROM 9M83H2A558 (MDA)	1	
- 33	25-33205- 13	• • • HINGE, HALF, ALTERED FROM 9M83H4A558 (MDA)	1	
- 34	H5000-2-064-179	• • • LATCH ASSY (HWL)	2	
- 35	15-11203	• • SPRING ASSEMBLY, ARRESTING GEAR CHARGE VALVE DOOR	1	
	AN393-43	• • • PIN, FLAT HEAD	1	
	NAS43-3-76	• • • SPACER	1	
	AN380-2-2	• • • PIN, COTTER	1	
	15-11203- 3	• • • SPRING	1	
	15-11203- 5	• • • CLIP	1	
- 36	9M79-39B518	• • STRIP, SEALING (MDA)	2	
- 37	9M79-58B557	• • STRIP, SEALING (MDA)	1	
	25-33008- 1	• MOUNT ASSEMBLY, AFT STRUCTURAL ENGINE LH	1	A-B
	25-33224- 1	• MOUNT ASSEMBLY, AFT STRUCTURAL ENGINE LH	1	C-F
	25-33008- 2	• MOUNT ASSEMBLY, AFT STRUCTURAL ENGINE RH	1	A-B
	25-33224- 2	• MOUNT ASSEMBLY, AFT STRUCTURAL ENGINE RH	1	C-F
- 38	25-33009- 4	• • FITTING, AFT ENGINE MOUNT SUPPORT LEFT SIDE	1	A-B
	25-33009- 6	• • FITTING, AFT ENGINE MOUNT SUPPORT LEFT SIDE	1	C-F
- 39	25-33009- 3	• • FITTING, AFT ENGINE MOUNT SUPPORT RIGHT SIDE	1	A-B
	25-33009- 5	• • FITTING, AFT ENGINE MOUNT SUPPORT RIGHT SIDE	1	C-F
- 40	25-33194- 3	• DOOR, TAIL SKID ATTACHMENT BOLT ACCESS LH	1	
	25-33194- 4	• DOOR, TAIL SKID ATTACHMENT BOLT ACCESS RH	1	
		ATTACHING PARTS		
	AN509-10R8	• SCREW	24	
		¤----¤-¤-¤----¤		
	25-78004- 3	• CONDUIT INSTALLATION, AFT FUSELAGE	1	
- 41	AN3064-10	• • CONNECTOR	2	
	AN3054-10	• • NUT, USE WITH INDEX 41	2	
	AN3066-10	• • NUT, LOCK, USE WITH INDEX 41	2	
	AN3053-10	• • FERRULE, USE WITH INDEX 41	2	
- 42	25-78004- 9	• • CONDUIT	1	
- 43	25-33020- 1	• FITTING ASSEMBLY, TAIL BUMPER ACTUATOR ATTACHMENT LH	1	
- 44	25-33020- 2	• FITTING ASSEMBLY, TAIL BUMPER ACTUATOR ATTACHMENT RH	1	
	4M34-14-60	• • BUSHING (MDA)	2	
	25-33204- 1	• DOOR ASSY, SPEED BRAKE SAFETY SWITCH ACCESS LH	1	
	25-33204- 2	• DOOR ASSY, SPEED BRAKE SAFETY SWITCH ACCESS RH	1	
- 45	25-33204- 3	• • DOOR ASSEMBLY LH	1	
- 46	25-33204- 4	• • DOOR ASSEMBLY RH	1	
- 47	AN253-5-328	• • • PIN, HINGE	1	
- 48	25-33204- 9	• • • HINGE, HALF, ALTERED FROM 9M83H4A340 (MDA)	1	
- 49	25-33204- 11	• • • HINGE, HALF, ALTERED FROM 9M83H2A340 (MDA)	1	
- 50	H5000-2-064-179	• • • LATCH ASSY (HWL)	1	
- 51	15-11203	• • SPRING ASSEMBLY, SPEED BRAKE SAFETY SWITCH ACCESS DOOR	1	
	AN393-43	• • • PIN, FLAT HEAD	1	
	NAS43-3-76	• • • SPACER	1	
	AN380-2-2	• • • PIN, COTTER	1	
	15-11203- 3	• • • SPRING	1	
	15-11203- 5	• • • CLIP	1	
- 52	9M79-50B1128	• • STRIP, SEALING (MDA)	1	
- 53	25-33023- 3	• LONGERON, AFT FUSELAGE LOWER LH	1	
- 54	25-33023- 4	• LONGERON, AFT FUSELAGE LOWER RH	1	
- 55	25-33175- 1	• DOOR ASSEMBLY, TAIL SKID ACTUATOR ACCESS LH	1	
- 56	25-33175- 2	• DOOR ASSEMBLY, TAIL SKID ACTUATOR ACCESS RH	1	
		ATTACHING PARTS		
	AN509-10R11	• SCREW	40	
		¤----¤-¤-¤----¤		
	25-32214- 1	• • CHAIN ASSY, TAIL SKID ACTUATOR ACCESS SAFETY	1	
	NAF1088-1A4	• • • CHAIN	1	
	RS109	• • • SWIVEL (RYY)	1	
	RS102	• • • LINK (RYY)	1	
- 57	25-58277- 1	• DRAIN LINE ASSEMBLY, AFTERBURNER SCUPPER	1	

Aft Fuselage

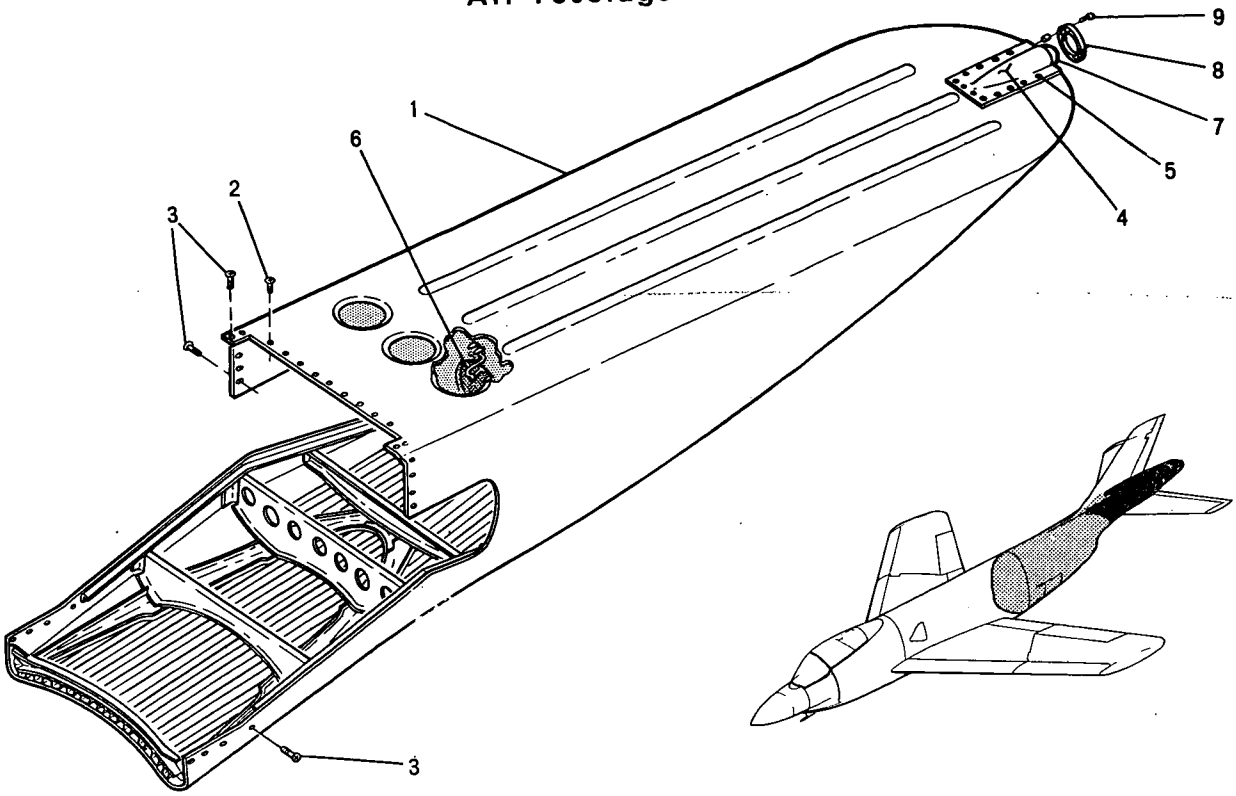

PC25-152

Figure 142 - Tail Cone Installation

FIGURE & INDEX NUMBER	PART NUMBER	1 2 3 4 5 6 7 DESCRIPTION	UNITS PER ASS'Y	USABLE ON CODE
142 -	25-33213-301	CONE INSTALLATION, TAIL, SEE FIG. 138-12 FOR NEXT HIGHER ASSEMBLY	REF	A-C
	25-33213-303	CONE INSTALLATION, TAIL, SEE FIG. 138-12 FOR NEXT HIGHER ASSEMBLY	REF	D-F
- 1	25-33040- 1	• CONE ASSEMBLY, STRUCTURAL TAIL	1	A-C
	25-33240- 1	• CONE ASSEMBLY, STRUCTURAL TAIL	1	D-F
		ATTACHING PARTS		
- 2	AN509-10R8	• SCREW	9	
- 3	AN509-416R14	• SCREW	20	
		¤----¤-¤-¤----¤		
- 4	25-33153- 1	• • HOUSING ASSEMBLY, TAIL LIGHT	1	
		ATTACHING PARTS		
- 5	AN509-10R7	• • SCREW	24	
		¤----¤-¤-¤----¤		
	25-78003- 1	• • WIRING INSTALLATION, TAIL CONE	1	
- 6	AN3436-4-1	• • • BLOCK ASSY, TERMINAL	1	
	AN530-4R6	• • • SCREW	2	
	AN961-10	• • • WASHER	1	
	AN364-1032	• • • NUT	1	
	25-79000-235	• • • BUNDLE ASSEMBLY, WIRE	1	
- 7	AN3158-1	• • • • LIGHT ASSY, TAIL	1	
- 8	25-78005- 3	• • • COVER, TAIL LIGHT ATTACHMENT	1	
		ATTACHING PARTS		
- 9	NAS229-62	• • • SCREW	2	
	NAS43-3-8	• • • SPACER	2	
		¤----¤-¤-¤----¤		

Aft Fuselage

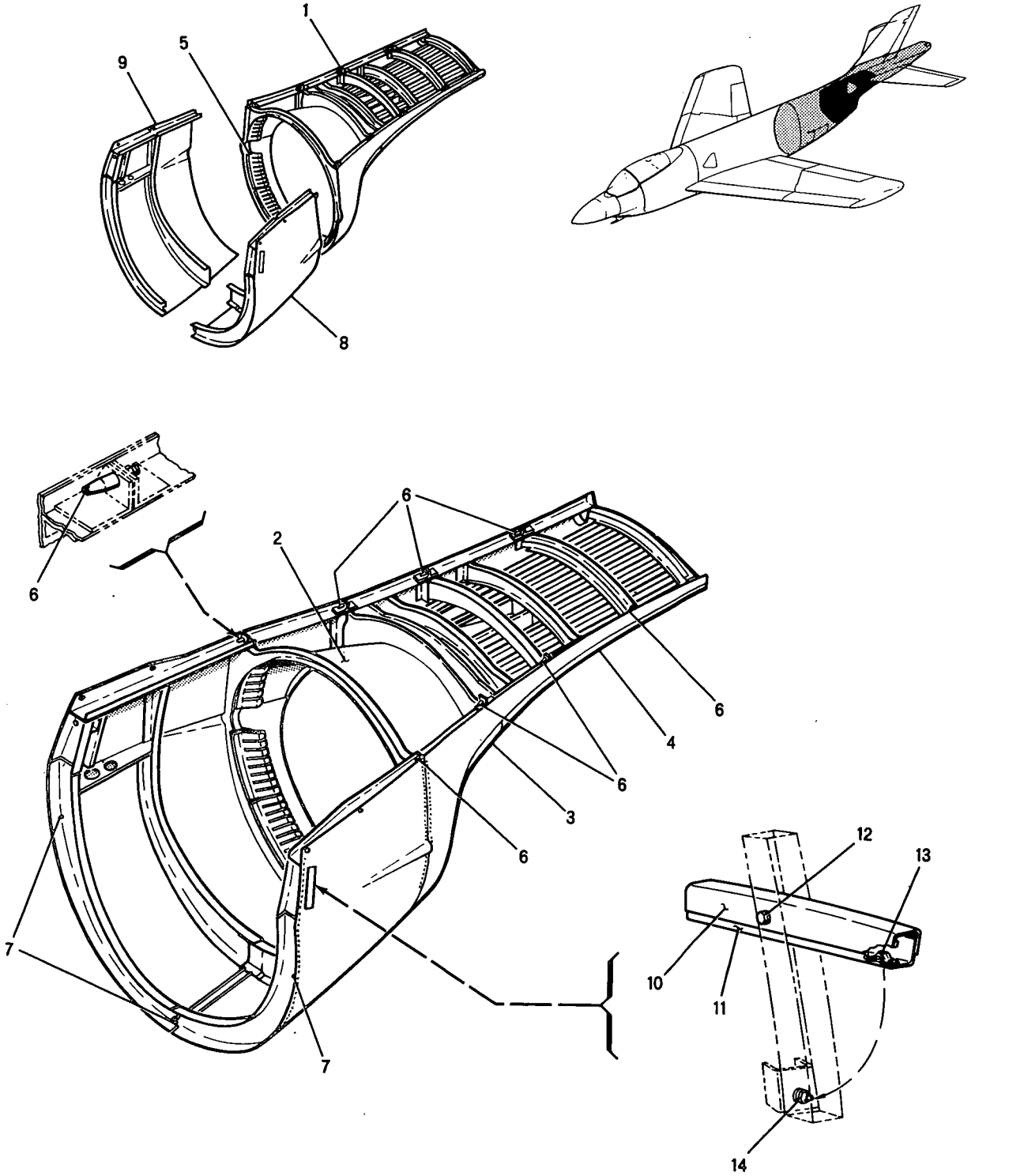

Figure 143 -- Blast Cone Assembly

FIGURE & INDEX NUMBER	PART NUMBER	1 2 3 4 5 6 7 DESCRIPTION	UNITS PER ASS'Y	USABLE ON CODE
143 -	25-33225- 1	CONE ASSY, STRUCTURAL BLAST, SEE FIG. 138-10 FOR NEXT HIGHER ASSY	REF	A-C
	25-33260- 1	CONE ASSY, STRUCTURAL BLAST, SEE FIG. 138-10 FOR NEXT HIGHER ASSY	REF	D-F
- 1	25-33225- 9	• CONE ASSY, BLAST	1	A-C
- 2	25-33125- 1	• • DOME ASSY, BLAST CONE INNER	1	A-C
- 3	25-33155- 1	• • CORNER ASSEMBLY, BLAST CONE LH	1	A-C
	25-33155- 2	• • CORNER ASSEMBLY, BLAST CONE RH	1	A-C
- 4	25-33156- 3	• • LONGERON, BLAST CONE LOWER LH	1	A-C
	25-33156- 4	• • LONGERON, BLAST CONE LOWER RH	1	A-C
- 5	25-33277- 1	• • SEAL ASSEMBLY, BLAST CONE	1	A-C
- 6	25-33157- 5	• PIN, BLAST CONE ATTACHMENT	8	
	AN960D516	• WASHER	16	
	AN363-524	• NUT	8	
- 7	25-33157- 5	• PIN, BLAST CONE ATTACHMENT	3	
	AN960D516	• WASHER	15	
	AN363-524	• NUT	3	
- 8	25-33225- 11	• FRAME ASSY, STRUCTURAL BLAST CONE LH FWD	1	A-C
- 9	25-33225- 12	• FRAME ASSY, STRUCTURAL BLAST CONE RH FWD	1	A-C
	25-33129- 1	• • FRAME ASSY, BLAST CONE LH FWD	1	
	25-33129- 2	• • FRAME ASSY, BLAST CONE RH FWD	1	
- 10	25-33129- 17	• • • CHANNEL LH	1	
	25-33129- 18	• • • CHANNEL RH	1	
- 11	25-33129- 19	• • • CHANNEL LH	1	
	25-33129- 20	• • • CHANNEL RH	1	
		ATTACHING PARTS		
- 12	AN3-17A	• • • BOLT	1	
	AN960D516	• • • WASHER	2	
	AN960D10L	• • • WASHER	2	
	NAS43DD3-93	• • • SPACER	1	
	AN365-1032	• • • NUT	1	
		¤----¤-¤-¤----¤		
- 13	A1663-032-3G	• • • SPRING (TIN)	1	
- 14	P116-421-14-3G	• • • STUD (TIN)	1	
	AN960D6	• • • WASHER	2	
	AN364-632	• • • NUT	1	

Aft Fuselage

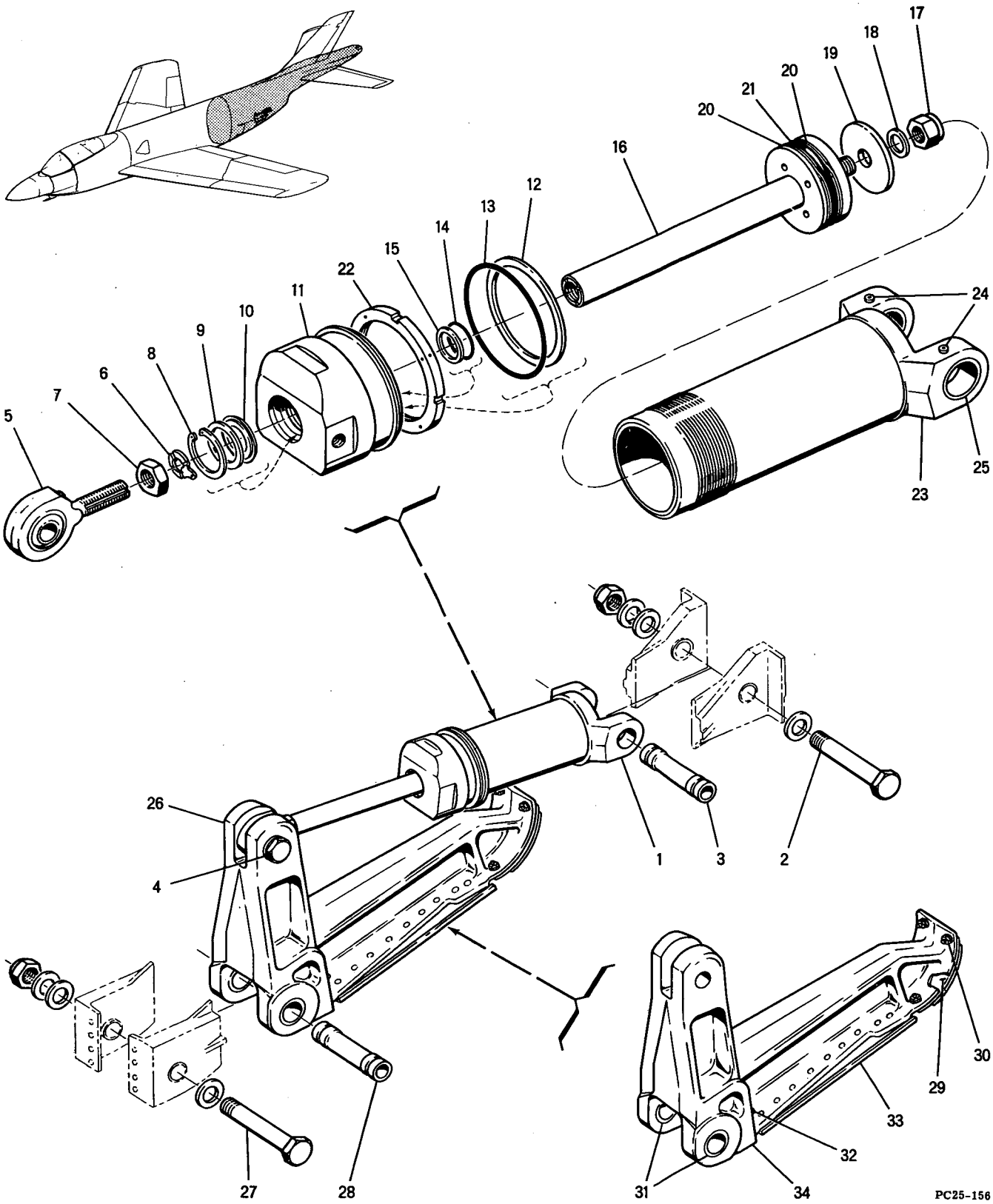

Figure 144 - Tail Skid Installation

FIGURE & INDEX NUMBER	PART NUMBER	1 2 3 4 5 6 7 DESCRIPTION	UNITS PER ASS'Y	USABLE ON CODE
144 -	25-45500- 1	SKID INSTALLATION, TAIL, SEE FIG. 138-9 FOR NEXT HIGHER ASSEMBLY	REF	
- 1	25-69028- 1	• CYLINDER ASSEMBLY, TAIL SKID SHOCK ABSORBING ACTUATOR	1	
		ATTACHING PARTS		
- 2	NAS464-14A93	• BOLT	1	
	AN960D1416	• WASHER	3	
	AN364-1414	• NUT	1	
- 3	25-45510- 3	• BUSHING, TAIL SKID CLAMP UP	1	
- 4	25-45512- 3	• BOLT, TAIL SKID ACTUATOR ATTACHMENT	1	
	AN960D1216	• WASHER	3	
	AN364-1216	• NUT	1	
		¤----¤-¤-¤----¤		
- 5	25-69272- 1	• • ROD ASSEMBLY, TAIL SKID ACTUATOR	1	
	BLR12000G	• • • BEARING (SWPC)	1	
	NAS497	• • • FITTING, LUB	1	
- 6	9M103-12	• • WASHER, LOCK (MDA)	1	
- 7	9M104-12	• • NUT, JAM (MDA)	1	
- 8	NAS50-150	• • RING, INTERNAL RETAINER	1	
- 9	4M36-11004	• • WASHER (MDA)	1	
- 10	AN6231A9	• • SCRAPER	1	
- 11	25-69269- 3	• • CAP, TAIL SKID ACTUATOR END	1	
- 12	AN6244-13	• • RING, BACK UP	1	
- 13	AN6230B13	• • GASKET, O RING	1	
- 14	AN6227B19	• • PACKING, O RING	1	
- 15	6144-19	• • RING, BACK UP (SHWS)	1	
- 16	25-69271- 1	• • PISTON ASSEMBLY, TAIL SKID ACTUATOR	1	
- 17	AN363-1018	• • NUT	1	
- 18	25-69276- 3	• • SPACER, TAIL SKID ACTUATOR	1	
- 19	25-69275- 5	• • WASHER, SHOCK ABSORBING TAIL SKID ACTUATOR	1	
- 20	6144-35	• • RING, BACK UP (SHWS)	2	
- 21	AN6227B35	• • PACKING, O RING	1	
- 22	25-69274- 3	• • NUT, TAIL SKID ACTUATOR LOCK	1	
- 23	25-69270- 1	• • BARREL ASSEMBLY, TAIL SKID ACTUATOR	1	
- 24	NAS497	• • • FITTING, LUB	2	
- 25	4M33-18-26	• • • BUSHING (MDA)	2	
- 26	25-45501- 1	• FRAME ASSEMBLY, TAIL SKID	1	
		ATTACHING PARTS		
- 27	NAS464-14A93	• BOLT	1	
	AN960D1416	• WASHER	3	
	AN364-1414	• NUT	1	
- 28	25-45510- 3	• BUSHING, TAIL SKID CLAMP UP	1	
		¤----¤-¤-¤----¤		
- 29	25-45502- 1	• • SHOE, TAIL SKID	1	
		ATTACHING PARTS		
- 30	AN4-6A	• • BOLT	4	
	AN960D416	• • WASHER	4	
	AN365-428	• • NUT	4	
		¤----¤-¤-¤----¤		
- 31	4M33P18-026	• • BUSHING (MDA)	2	
- 32	AN944-101	• • FITTING, LUB	2	
- 33	25-45509- 3	• • FAIRING, TAIL SKID	1	
- 34	25-45501- 3	• • FRAME	1	

Aft Fuselage

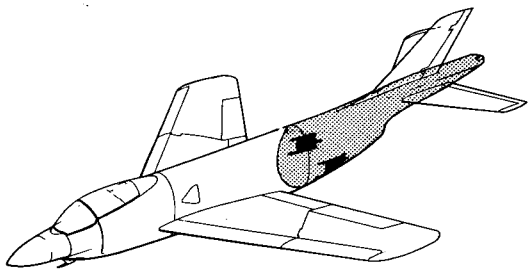

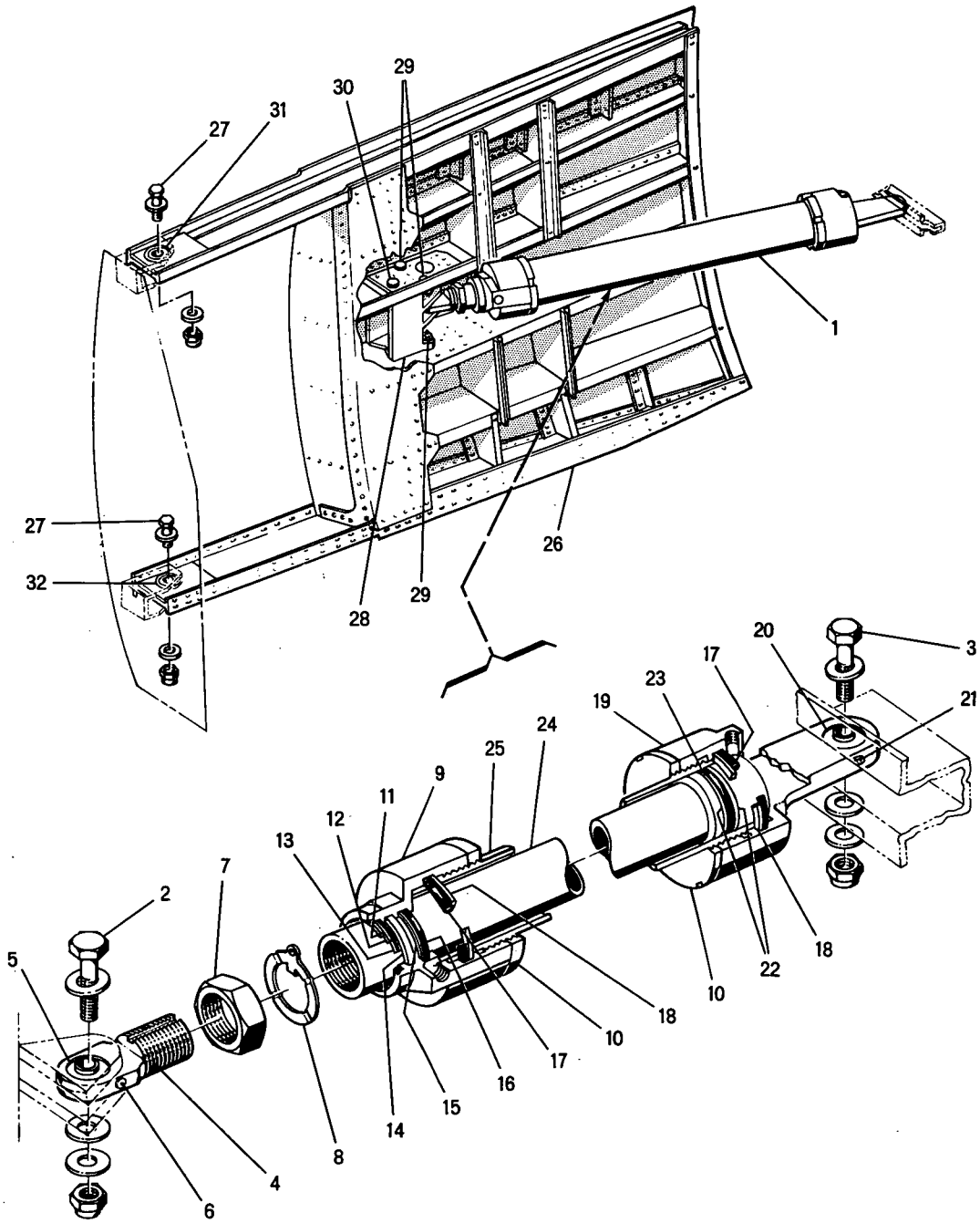

Figure 145 - Speed Brake Installation

FIGURE & INDEX NUMBER	PART NUMBER	1 2 3 4 5 6 7 DESCRIPTION	UNITS PER ASS'Y	USABLE ON CODE
145 -	25-34001- 1	BRAKE INSTALLATION, SPEED LH, SEE FIG. 138-4 FOR NEXT HIGHER ASSY	REF	
	25-34001- 2	BRAKE INSTALLATION, SPEED RH, SEE FIG. 138-4 FOR NEXT HIGHER ASSY	REF	
- 1	25-69025-301	. CYLINDER ASSEMBLY, SPEED BRAKE LH	1	
	25-69025-302	. CYLINDER ASSEMBLY, SPEED BRAKE RH	1	
		ATTACHING PARTS		
- 2	NAS464-8A26	. BOLT	1	
	AN960D816	. WASHER	3	
	AN364-820	. NUT	1	
- 3	NAS464-8A20	. BOLT	1	
	AN960D816	. WASHER	3	
	AN364-820	. NUT	1	
		¤----¤-¤-¤----¤		
- 4	25-69123-301	. . ROD END ASSY, SPEED BRAKE CYLINDER	1	
- 5	BSR8000G-C	. . . BEARING (SWPC)	1	
- 6	NAS497	. . . FITTING, LUB	1	
- 7	9M104-22	. . NUT, JAM (MDA)	1	
- 8	9M103-22	. . WASHER, LOCK (MDA)	1	
- 9	25-69124- 3	. . CAP, SPEED BRAKE CYLINDER END	1	
- 10	25-69142- 3	. . NUT, SPEED BRAKE CYLINDER LOCK	2	
- 11	NAS50-206	. . RING, INTERNAL RETAINER	1	
- 12	4M36-15003	. . WASHER (MDA)	1	
- 13	AN6231A17	. . SCRAPER	1	
- 14	AN6232C5	. . FELT, STRIP PACKING	1	
- 15	6144-27	. . RING, BACK UP (SHWS)	1	
- 16	AN6227B27	. . PACKING, O RING	1	
- 17	AN6227B38	. . PACKING, O RING	2	
- 18	6144-38	. . RING, BACK UP (SHWS)	2	
- 19	25-69120- 1	. . CAP ASSEMBLY, SPEED BRAKE CYLINDER	1	
- 20	BSR8000G-C	. . . BEARING (SWPC)	1	
- 21	NAS516-1	. . . FITTING, LUB	1	
- 22	6144-32	. . RING, BACK UP (SHWS)	2	
- 23	AN6227B32	. . PACKING, O RING	1	
- 24	25-69141-301	. . PISTON ASSEMBLY, SPEED BRAKE CYLINDER	1	
	25-89034- 7	. . NAMEPLATE, SPEED BRAKE CYLINDER, LEFT SIDE	1	
	25-89034- 9	. . NAMEPLATE, SPEED BRAKE CYLINDER, RIGHT SIDE	1	
- 25	25-69138- 3	. . BARREL, SPEED BRAKE CYLINDER	1	
- 26	25-34002- 1	. SPEED BRAKE ASSY LH	1	
	25-34002- 2	. SPEED BRAKE ASSY RH	1	
		ATTACHING PARTS		
- 27	NAS464-5A33	. BOLT	2	
	AN960D516	. WASHER	4	
	AN364-524	. NUT	2	
		¤----¤-¤-¤----¤		
- 28	25-34003- 3	. . FITTING, SPEED BRAKE ACTUATOR ATTACHMENT	1	
		ATTACHING PARTS		
- 29	AN6-11A	. . BOLT	4	
	AN960D616L	. . WASHER	4	
	AN960D616	. . WASHER	8	
	AN365-624	. . NUT	4	
- 30	AN6-10A	. . BOLT	2	
	AN960D616L	. . WASHER	2	
		¤----¤-¤-¤----¤		
	25-34002- 3	. . BEAM ASSEMBLY, LH	1	
	25-34002- 4	. . BEAM ASSEMBLY, RH	1	
	25-34009- 1	. . . FITTING ASSY, SPEED BRAKE UPPER BEARING SUPPORT LH	1	
	25-34009- 2	. . . FITTING ASSY, SPEED BRAKE UPPER BEARING SUPPORT RH	1	
- 31	BSR5000C	. . . . BEARING (SWPC)	1	
	25-34002- 5	. . BEAM ASSEMBLY, LH	1	
	25-34002- 6	. . BEAM ASSEMBLY, RH	1	
	25-34010- 1	. . . FITTING ASSEMBLY, SPEED BRAKE LOWER BEARING SUPPORT LH	1	
	25-34010- 2	. . . FITTING ASSEMBLY, SPEED BRAKE LOWER BEARING SUPPORT RH	1	
- 32	BSR5000C	. . . . BEARING (SWPC)	1	

Aft Fuselage

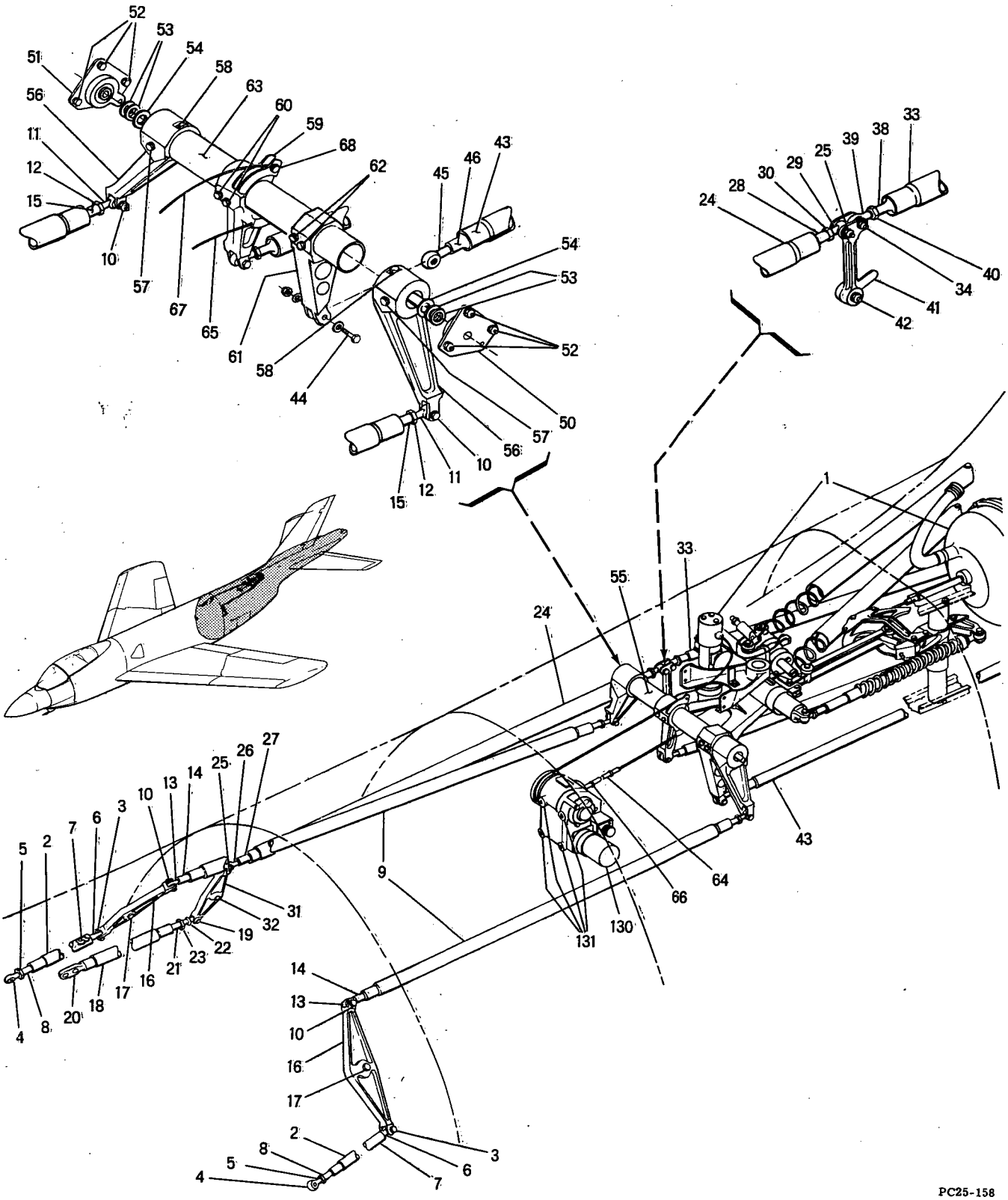

Figure 146 -- Aft Fuselage Stabilator and Rudder Controls Installation (Sheet 1 of 2)

Aft Fuselage

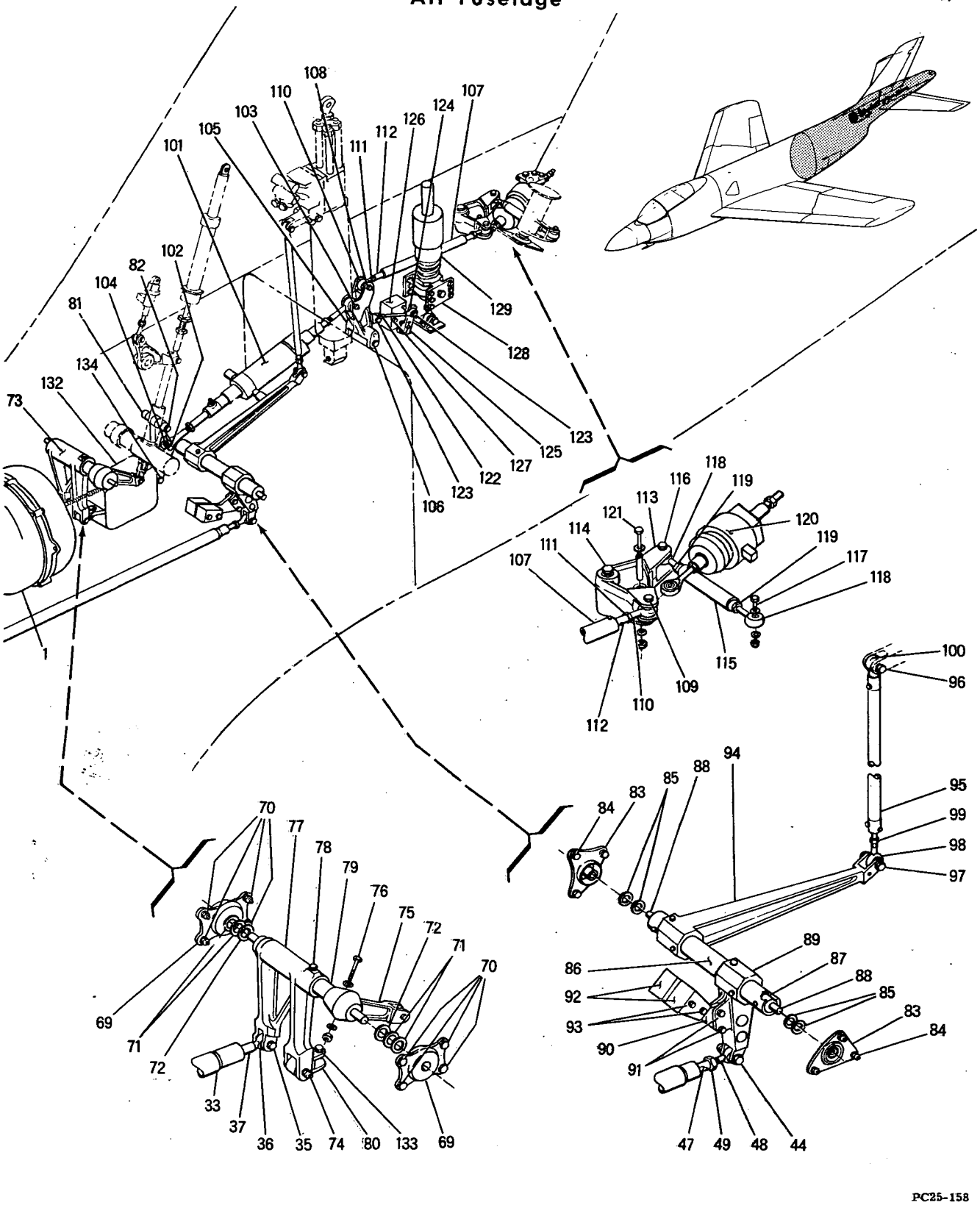

PC25-158

Figure 146 -- Aft Fuselage Stabilator and Rudder Controls Installation (Sheet 2 of 2)

FIGURE & INDEX NUMBER	PART NUMBER	1 2 3 4 5 6 7 DESCRIPTION	UNITS PER ASS'Y	USABLE ON CODE
146 -	25-61280- 1	CONTROLS INSTALLATION, AFT FUSELAGE STABILATOR & RUDDER, SEE FIG. 138-3 FOR NEXT HIGHER ASSY	REF	
- 1	25-61310- 1	• SYSTEM INSTL, STABILATOR FEEL, SEE FIG. 147	1	
- 2	25-61037- 51	• ROD ASSEMBLY, STABILATOR CONTROL	2	
		ATTACHING PARTS		
- 3	NAS464-4A14	• BOLT	2	
	AN960D416L	• WASHER	2	
	AN960D416	• WASHER	2	
	AN364-428	• NUT	2	
		¤----¤-¤-¤----¤		
- 4	RE4M6	• • BEARING, ROD END (FAF)	1	
- 5	AN316-6R	• • NUT	2	
	25-61037-151	• • ROD ASSEMBLY	1	
- 6	RE4H6	• • • BEARING, ROD END (FAF)	1	
- 7	25-61070- 3	• • • ADAPTER, ROD END	1	
- 8	25-61073- 3	• • • ADAPTER, ROD END	1	
- 9	25-61037- 53	• ROD ASSEMBLY, STABILATOR CONTROL	2	
		ATTACHING PARTS		
- 10	NAS464-4A14	• BOLT	4	
	AN960D416L	• WASHER	4	
	AN960D416	• WASHER	4	
	AN364-428	• NUT	4	
		¤----¤-¤-¤----¤		
- 11	RE4M6	• • BEARING, ROD END (FAF)	1	
- 12	AN316-6R	• • NUT	1	
	25-61037-153	• • ROD ASSEMBLY	1	
- 13	RE4H6	• • • BEARING, ROD END (FAF)	1	
- 14	25-61071- 3	• • • ADAPTER, ROD END	1	
- 15	25-61067- 3	• • • ADAPTER, ADJUSTABLE ROD END	1	
- 16	25-61332- 1	• BELL CRANK ASSY, STABILATOR	2	
		ATTACHING PARTS		
- 17	NAS464-6A21	• BOLT	2	
	AN960D616L	• WASHER	2	
	AN960D616	• WASHER	2	
	AN364-624	• NUT	2	
		¤----¤-¤-¤----¤		
	DW6	• • BEARING (FAF)	1	
- 18	25-61037- 55	• ROD ASSY, RUD CONTROL	1	
		ATTACHING PARTS		
- 19	NAS464-4A14	• BOLT	1	
	AN960D416L	• WASHER	1	
	AN960D416	• WASHER	1	
	AN364-428	• NUT	1	
		¤----¤-¤-¤----¤		
	25-61037-155	• • ROD ASSEMBLY	1	
- 20	25-61074- 1	• • • ROD END ASSY	1	
	AN206DSP4	• • • • BEARING	2	
- 21	25-61089- 5	• • • ADAPTER, ADJUSTABLE ROD END	1	
- 22	25-61091- 3	• • BEARING, SPECIAL ROD END, ALTERED FROM RE4S10 OR RE4H6 (FAF)	1	
- 23	AN316-8R	• • NUT	1	
- 24	25-61037- 57	• ROD ASSEMBLY, RUDDER CONTROL	1	
		ATTACHING PARTS		
- 25	NAS464-4A14	• BOLT	2	
	AN960D416L	• WASHER	2	
	AN960D416	• WASHER	2	
	AN364-428	• NUT	2	
		¤----¤-¤-¤----¤		
	25-61037-157	• • ROD ASSEMBLY	1	
- 26	RE4H6	• • • BEARING, ROD END (FAF)	1	
- 27	25-61071- 3	• • • ADAPTER, ROD END	1	
- 28	25-61067- 3	• • • ADAPTER, ADJUSTABLE ROD END	1	
- 29	RE4M6	• • BEARING, ROD END (FAF)	1	
- 30	AN316-6R	• • NUT	1	
- 31	25-61328- 1	• BELL CRANK ASSEMBLY, RUDDER CONTROL	1	
		ATTACHING PARTS		
- 32	NAS464-6A24	• BOLT	1	
	AN960D616L	• WASHER	1	
	AN960D616	• WASHER	1	
	AN364-624	• NUT	1	
		¤----¤-¤-¤----¤		
	DW6	• • BEARING (FAF)	1	
- 33	25-61037- 59	• ROD ASSEMBLY, RUDDER CONTROL	1	

FIGURE & INDEX NUMBER	PART NUMBER	1 2 3 4 5 6 7 DESCRIPTION	UNITS PER ASS'Y	USABLE ON CODE
146 -		ATTACHING PARTS		
- 34	NAS464-4A14	• BOLT	1	
	AN960D416L	• WASHER	1	
	AN960D416	• WASHER	1	
	AN364-428	• NUT	1	
- 35	NAS464-4A15	• BOLT	1	
	AN960D416L	• WASHER	1	
	AN960D416	• WASHER	1	
	AN364-428	• NUT	1	
		¤----¤-¤-¤----¤		
	25-61037-159	• • ROD ASSEMBLY	1	
- 36	RE4H6	• • • BEARING, ROD END (FAF)	1	
- 37	25-61071- 3	• • • ADAPTER, ROD END	1	
- 38	25-61067- 3	• • • ADAPTER, ADJUSTABLE ROD END	1	
- 39	RE4M6	• • BEARING, ROD END (FAF)	1	
- 40	AN316-6R	• • NUT	1	
- 41	25-61333- 1	• IDLER ASSEMBLY, RUDDER CONTROL	1	
		ATTACHING PARTS		
- 42	NAS464-5A18	• BOLT	1	
	AN960D516L	• WASHER	1	
	AN960D516	• WASHER	1	
	AN364-524	• NUT	1	
		¤----¤-¤-¤----¤		
	DW5	• • BEARING (FAF)	1	
- 43	25-61037- 83	• ROD ASSEMBLY, STABILATOR CONTROL	1	
		ATTACHING PARTS		
- 44	NAS464-4A14	• BOLT	2	
	AN960D416L	• WASHER	2	
	AN960D416	• WASHER	2	
	AN364-428	• NUT	2	
		¤----¤-¤-¤----¤		
	25-61037-183	• • ROD ASSEMBLY	1	
- 45	RE4H6	• • • BEARING, ROD END (FAF)	1	
- 46	25-61090- 3	• • • ADAPTER, STABILATOR CONTROL ROD END	1	
- 47	25-61089- 5	• • • ADAPTER, ADJUSTABLE ROD END	1	
- 48	25-61091- 3	• • BEARING, SPECIAL ROD END, ALTERED FROM RE4S10 OR RE4H6 (FAF)	1	
- 49	AN316-8R	• • NUT	1	
- 50	25-61304- 5	• SUPPORT ASSY, STABILATOR TORQUE TUBE, LEFT SIDE	1	
- 51	25-61304- 7	• SUPPORT ASSY, STABILATOR TORQUE TUBE, RIGHT SIDE	1	
		ATTACHING PARTS		
- 52	AN4-6A	• BOLT	6	
	AN960D416L	• WASHER	6	
	AN960D416	• WASHER	12	
	AN364-428	• NUT	6	
		¤----¤-¤-¤----¤		
	AN200KS8	• • BEARING	1	
- 53	4M36-04016	• WASHER (MDA)	4	
- 54	4M36-04015	• WASHER (MDA)	2	
- 55	25-61281- 1	• BELL CRANK ASSY, STABILATOR TORQUE TUBE, MAY BE USED IF 25-61281-301 IS NOT AVAILABLE	1	
	25-61281-301	• BELL CRANK ASSY, STABILATOR TORQUE TUBE, USE FOR FUTURE PROCUREMENT TO REPLACE 25-61281-1	1	
- 56	25-61324- 5	• • ARM, STABILATOR CONTROL TRUNNION	2	
		ATTACHING PARTS		
- 57	NAS464-4A42	• • BOLT	2	
	AN960D416	• • WASHER	4	
	AN364-428	• • NUT	2	
- 58	NAS464-4A39	• • BOLT	2	
	AN960D416	• • WASHER	4	
	AN364-428	• • NUT	2	
		¤----¤-¤-¤----¤		
- 59	25-61344- 9	• • SECTOR, STABILATOR AUTO PILOT	1	
		ATTACHING PARTS		
- 60	NAS464-4A42	• • BOLT	2	
	AN960D416	• • WASHER	4	
	AN364-428	• • NUT	2	
		¤----¤-¤-¤----¤		
- 61	25-61279- 3	• • ARM, STABILATOR BELL CRANK	1	25-61281-1
	25-61219- 3	• • ARM, STABILATOR BELL CRANK	1	25-61281-301

FIGURE & INDEX NUMBER	PART NUMBER	1 2 3 4 5 6 7 DESCRIPTION	UNITS PER ASS'Y	USABLE ON CODE
146 -		ATTACHING PARTS		
- 62	NAS464-4A42	• • BOLT	2	
	AN960D416	• • WASHER	4	
	AN364-428	• • NUT	2	
		¤----¤-¤-¤-----¤		
- 63	25-61281- 3	• • TUBE	1	25-61281-1
	25-61281- 5	• • TUBE	1	25-61281-301
- 64	AN155-32S	• BARREL, TURNBUCKLE	1	
- 65	NAS314-10-0087	• CABLE ASSEMBLY	1	
- 66	NAS314-11-0234	• CABLE ASSEMBLY	1	
- 67	NAS324-11-0276	• CABLE ASSEMBLY.	1	
- 68	AN23-15A	• BOLT	2	
	AN960D10L	• WASHER	2	
	AN960D10	• WASHER	2	
	AN364-1032	• NUT	2	
- 69	25-61354- 1	• SUPPORT ASSEMBLY, RUDDER CONTROL BELL CRANK	2	
		ATTACHING PARTS		
- 70	AN4-6A	• BOLT	8	
	AN960D416L	• WASHER	8	
	AN960D416	• WASHER	8	
	AN364-428	• NUT	8	
		¤----¤-¤-¤-----¤		
	AN200KS8	• • BEARING	1	
- 71	4M36-04016	• WASHER(MDA)	4	
- 72	25-61358- 3	• SPACER, RUDDER CONTROL	2	
- 73	25-61331- 1	• BELL CRANK ASSEMBLY, RUDDER CONTROL	1	
		ATTACHING PARTS		
- 74	NAS464-4A21	• BOLT	1	
	AN960D416L	• WASHER	1	
	AN960D416	• WASHER	1	
	AN364-428	• NUT	1	
		¤----¤-¤-¤-----¤		
- 75	25-61352- 3	• • ARM, RUDDER CONTROL BELL CRANK	1	
		ATTACHING PARTS		
- 76	NAS464-6A29	• • BOLT	1	
	AN960D616	• • WASHER	2	
	AN364-624	• • NUT	1	
		¤----¤-¤-¤-----¤		
- 77	25-61351- 3	• • ARM, RUDDER CONTROL BELL CRANK	1	
		ATTACHING PARTS		
- 78	NAS464-6A31	• • BOLT	1	
	AN960D616	• • WASHER	2	
	AN364-624	• • NUT	1	
		¤----¤-¤-¤-----¤		
- 79	25-61353- 5	• • TUBE, RUDDER CONTROL BELL CRANK TORQUE	1	
- 80	25-61316- 1	• UNIVERSAL ASSEMBLY, RUDDER DAMPER	1	
	DW4	• • BEARING (FAF)	1	
- 81	25-61329- 3	• BELL CRANK, RUDDER CONTROL	1	
		ATTACHING PARTS		
- 82	NAS464-4A75	• BOLT	1	
	AN960D416L	• WASHER	1	
	AN960D416	• WASHER	1	
	AN364-428	• NUT	1	
		¤----¤-¤-¤-----¤		
- 83	25-61278- 1	• SUPPORT ASSEMBLY, STABILATOR BELL CRANK, MAY BE USED IF 25-61218-1 IS NOT AVAILABLE	1	
	25-61218- 1	• SUPPORT ASSEMBLY, STABILATOR BELL CRANK, USE FOR FUTURE PROCUREMENT TO REPLACE 25-61278-1	1	
		ATTACHING PARTS		
- 84	AN4-6A	• BOLT	6	
	AN960D416L	• WASHER	6	
	AN960D416	• WASHER	6	
	AN364-428	• NUT	6	
		¤----¤-¤-¤-----¤		
	AN200KS5	• • BEARING	1	
- 85	4M36-02009	• WASHER (MDA)	4	
	25-61275- 5	• BELL CRANK ASSEMBLY, STABILATOR, MAY BE USED IF 25-61230-5 IS NOT AVAILABLE	1	
- 86	25-61230- 5	• BELL CRANK ASSEMBLY, STABILATOR, USE FOR FUTURE PROCUREMENT TO REPLACE 25-61275-5	1	
- 87	25-61226- 3	• • ADAPTER, STABILATOR BELL CRANK	2	
- 88	25-61227- 3	• • PIN, STABILATOR BELL CRANK	2	
- 89	25-61160- 3	• • ARM, STABILATOR BELL CRANK	1	

FIGURE & INDEX NUMBER	PART NUMBER	1 2 3 4 5 6 7 DESCRIPTION	UNITS PER ASS'Y	USABLE ON CODE
146 - 90	25-61221- 3	• • ARM, STABILATOR BELL CRANK BALANCE	1	
		ATTACHING PARTS		
- 91	NAS464-4A12	• • BOLT	2	25-61275-5
	NAS464-4A11	• • BOLT	2	25-61230-5
	AN960D416L	• • WASHER	2	25-61230-5
	AN960D416	• • WASHER	2	25-61230-5
	AN960D416	• • WASHER	4	25-61275-5
	AN364-428	• • NUT	2	
		¤----¤-¤-¤----¤		
- 92	25-61220- 5	• • BALANCE, STABILATOR BELL CRANK	2	
		ATTACHING PARTS		
- 93	AN3-24A	• • BOLT	2	
	AN960D10	• • WASHER	2	
	AN365-1032	• • NUT	1	25-61275-5
	AN364-1032	• • NUT	2	25-61230-5
		¤----¤-¤-¤----¤		
- 94	25-61276- 3	• • ARM, STABILATOR BELL CRANK	1	25-61275-5
	25-61273- 3	• • ARM, STABILATOR BELL CRANK	1	25-61230-5
- 95	25-61037- 97	• ROD ASSEMBLY, STABILATOR CONTROL	1	
		ATTACHING PARTS		
- 96	NAS464-4A15	• BOLT	1	
	AN960D416L	• WASHER	1	
	AN960D416	• WASHER	1	
	AN364-428	• NUT	1	
- 97	NAS464-4A14	• BOLT	1	
	AN960D416L	• WASHER	1	
	AN960D416	• WASHER	1	
	AN364-428	• NUT	1	
		¤----¤-¤-¤----¤		
- 98	RE4F5	• • BEARING, ROD END (FAF)	1	
- 99	AN316-5R	• • NUT	1	
	25-61037-197	• • ROD ASSEMBLY	1	
-100	25-61092- 3	• • • BEARING, SPECIAL ROD END, ALTERED FROM RE4M6 (FAF)	1	
-101	25-69169- 1	• ACTUATOR ASSEMBLY, RUDDER, SEE FIG. 153	1	
		ATTACHING PARTS		
-102	NAS464-6A21	• BOLT	1	
	AN960D616L	• WASHER	1	
	AN960D616	• WASHER	1	
	AN364-624	• NUT	1	
-103	NAS464-5A23	• BOLT	1	
	AN960D516L	• WASHER	1	
	4M36-02039	• WASHER (MDA)	4	
	AN960D516	• WASHER	1	
	AN364-524	• NUT	1	
		¤----¤-¤-¤----¤		
-104	FDT6	• BEARING (TOR)	1	
-105	25-61334-301	• BELL CRANK ASSEMBLY, RUDDER CONTROL	1	
		ATTACHING PARTS		
-106	NAS464-5A20	• BOLT	1	
	AN960D516L	• WASHER	1	
	AN960D516	• WASHER	1	
	AN364-524	• NUT	1	
		¤----¤-¤-¤----¤		
	4M34-5-15	• • BUSHING (MDA)	4	
-107	25-61388- 1	• ROD ASSEMBLY, RUDDER CONTROL	1	
		ATTACHING PARTS		
-108	NAS464-5A22	• BOLT	1	
	AN960D516L	• WASHER	1	
	AN960D516	• WASHER	1	
	AN364-524	• NUT	1	
-109	NAS464-5A20	• BOLT	1	
	AN960D516L	• WASHER	1	
	AN960D516	• WASHER	1	
	AN364-524	• NUT	1	
		¤----¤-¤-¤----¤		
-110	RE5M7	• • BEARING, ROD END (FAF)	2	
-111	AN316-7R	• • NUT	2	
-112	25-61387- 3	• • ADAPTER, RUDDER CONTROL ROD END	2	
-113	25-61395- 1	• BELL CRANK ASSEMBLY, RUDDER CONTROL	1	
		ATTACHING PARTS		
-114	AN176-52A	• BOLT	1	
	AN960D616	• WASHER	2	
	AN364-624	• NUT	1	
		¤----¤-¤-¤----¤		

FIGURE & INDEX NUMBER	PART NUMBER	1 2 3 4 5 6 7 DESCRIPTION	UNITS PER ASS'Y	USABLE ON CODE
146 -	4M34-6-56	• • BUSHING (MDA)	2	
-115	25-61386- 1	• ROD ASSEMBLY, RUDDER CONTROL	1	
		ATTACHING PARTS		
-116	NAS464-5A20	• BOLT	1	
	AN960D516L	• WASHER	1	
	AN960D516	• WASHER	1	
	AN364-524	• WASHER	1	
-117	NAS464-5A23	• BOLT	1	
	AN960D516L	• WASHER	1	
	AN960D516	• WASHER	1	
	AN364-524	• NUT	1	
		¤----¤-¤-¤----¤		
-118	RE5M7	• • ROD END (FAF)	2	
-119	AN316-7R	• • NUT	2	
-120	25-69319- 7	• DAMPER ASSEMBLY, RUDDER FEEL SYSTEM VISCOUS, SEE FIG. 152	1	
		ATTACHING PARTS		
-121	NAS464-5A35	• BOLT	1	
	AN960D516L	• WASHER	1	
	25-61099- 7	• BUSHING, CONTROL SYS	1	
	AN960D516	• WASHER	1	
	AN364-524	• NUT	1	
		¤----¤-¤-¤----¤		
-122	25-61223- 1	• ROD ASSEMBLY, RUDDER POSITION INDICATOR TRANSMITTER	1	
		ATTACHING PARTS		
-123	AN3-10A	• BOLT	2	
	AN960D10L	• WASHER	2	
	AN960D10	• WASHER	2	
	AN364-1032	• NUT	2	
		¤----¤-¤-¤----¤		
	RE3H5	• • BEARING, ROD END (FAF)	2	
-124	25-61225- 3	• ARM, RUDDER POSITION INDICATOR TRANSMITTER	1	
		ATTACHING PARTS		
-125	AN4-7A	• BOLT	1	
	AN960D416L	• WASHER	1	
	AN960D416	• WASHER	1	
	AN364-428	• NUT	1	
		¤----¤-¤-¤----¤		
-126	23104-3B-B	• TRANSMITTER, RUDDER POSITION (ECP)	1	
		ATTACHING PARTS		
-127	AN515-6R32	• BOLT	3	
	AN960D6L	• WASHER	3	
	AN960D6	• WASHER	3	
	AN363-632	• NUT	3	
		¤----¤-¤-¤----¤		
	25-61161- 1	• HOUSING ASSY, STABILATOR DAMPER SUP. BEARING	2	
		ATTACHING PARTS		
	NAS464P4A9	• BOLT	12	
	AN960D416	• WASHER	36	
	AN364-428	• NUT	12	
		¤----¤-¤-¤----¤		
-128	25-61163- 3	• • SPACER, STABILATOR DAMPER SUPPORT BEARING	1	
	HSSB14-1	• • BEARING (HLF)	1	
	NAS516-1	• • FITTING, LUB	1	
-129	25-69381- 1	• DAMPER ASSEMBLY, STABILATOR VISCOUS, SEE FIG. 151	1	
		ATTACHING PARTS		
	NAS464P10A19	• BOLT	1	
	AN960D1016	• WASHER	3	
	AN364-1018	• NUT	1	
		¤----¤-¤-¤----¤		
	25-61280- 3	SERVO INSTALLATION, AFT FUSELAGE RUDDER & STABILATOR, SEE FIG. 138-46 FOR NEXT HIGHER ASSY	REF	
-130	R88S0210-020	• SERVO, GFP	1	
		ATTACHING PARTS		
-131	AN5H5A	• BOLT	4	
	AN960D516	• WASHER	8	
		¤----¤-¤-¤----¤		
-132	R88S0210-010	• SERVO, GFP	1	

FIGURE & INDEX NUMBER	PART NUMBER	1 2 3 4 5 6 7 DESCRIPTION	UNITS PER ASS'Y	USABLE ON CODE
146 -		ATTACHING PARTS		
-133	NAS464-4A19	• BOLT	1	
	AN960D416L	• WASHER	1	
	AN960D416	• WASHER	1	
	AN364-428	• NUT	1	
-134	NAS464-4A14	• BOLT	1	
	AN960D416L	• WASHER	1	
	AN960D416	• WASHER	1	
	AN364-428	• NUT	1	

Aft Fuselage

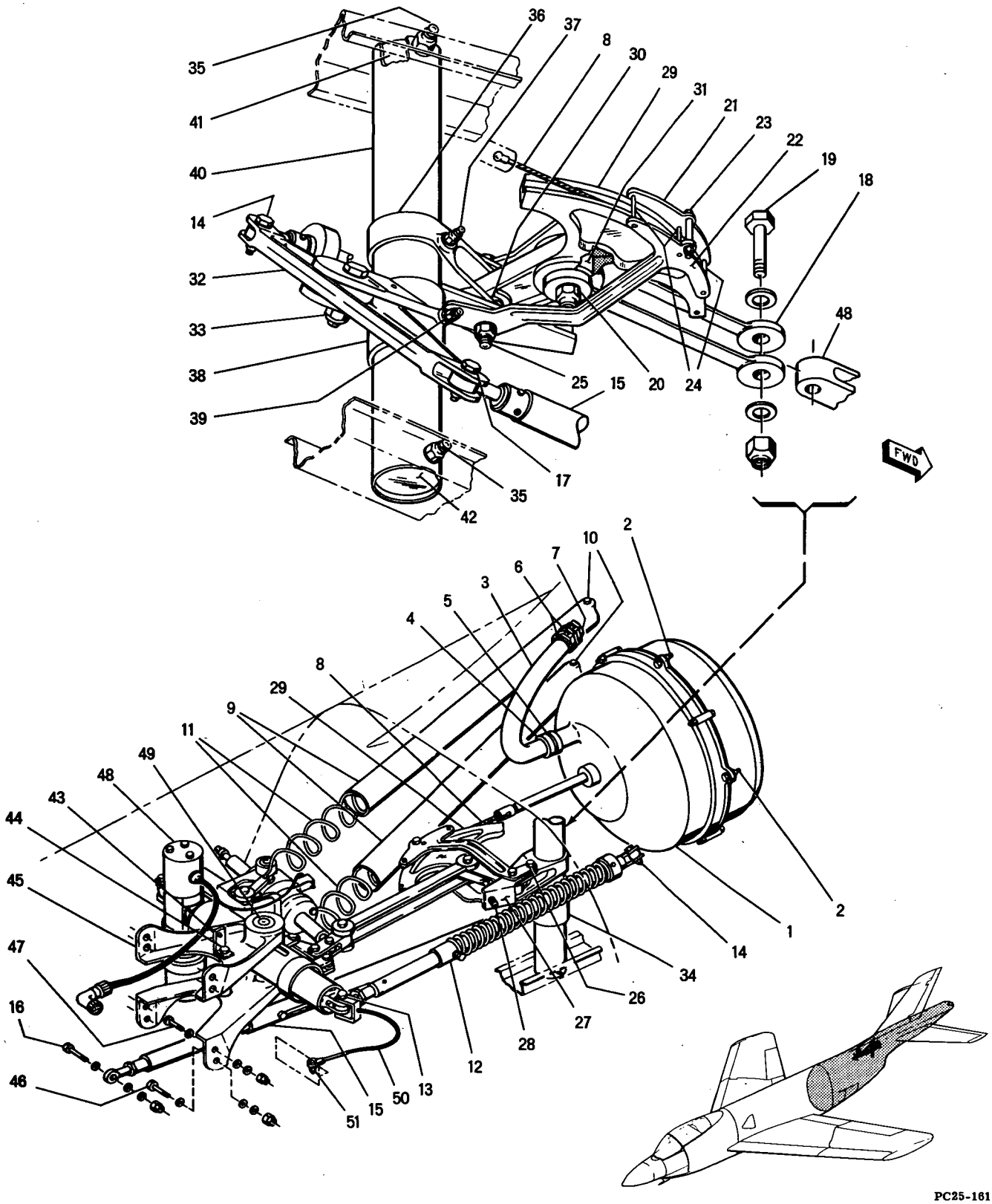

Figure 147 -- Stabilator Feel System Installation

FIGURE & INDEX NUMBER	PART NUMBER	1 2 3 4 5 6 7 DESCRIPTION	UNITS PER ASS'Y	USABLE ON CODE
147 -	25-61310- 1	SYSTEM INSTL, STABILATOR FEEL, SEE FIG. 146-1 FOR NEXT HIGHER ASSY	REF	
- 1	25-61315- 1	. BELLOWS ASSY, STABILATOR FEEL SYSTEM, SEE FIG. 149	1	
		ATTACHING PARTS		
- 2	AN4-27A	. BOLT	2	
	AN960D416L	. WASHER	2	
	AN960D416	. WASHER	4	
	AN365-428	. NUT	2	
	AN4-10A	. BOLT, LOWER	1	
	AN960D416L	. WASHER	1	
	AN960D416	. WASHER	1	
	AN365-428	. NUT	1	
		¤----¤-¤-¤----¤		
- 3	25-61321- 3	. TUBE, STABILATOR FEEL SYSTEM RAM AIR INTAKE	1	
- 4	15329-01.250	. SLEEVE (MAR)	1	
- 5	42535-1.250SH	. COUPLING (MAR)	1	
- 6	AN737-58	. CLAMP	2	
- 7	25-61257- 3	. HOSE, STABILATOR FEEL SYSTEM RAM AIR	1	
- 8	NAS324-11-0101	. CABLE ASSEMBLY	1	
- 9	25-61371- 3	. TUBE, STABILATOR FEEL SYSTEM SPRING COVER	2	
		ATTACHING PARTS		
- 10	AN4-23A	. BOLT	2	
	AN960D416L	. WASHER	2	
	25-61313- 3	. SPACER, STABILATOR FEEL SYSTEM SPRING	2	
	AN960D416	. WASHER	4	
	AN364-428	. NUT	2	
		¤----¤-¤-¤----¤		
- 11	25-61398- 3	. SPRING, STABILATOR FEEL SYSTEM EXTENSION	2	
- 12	25-61283- 1	. CARTRIDGE ASSY, STABILATOR FEEL SYSTEM SPRING, SEE FIG. 148	1	
		ATTACHING PARTS		
- 13	NAS464-4A23	. BOLT	1	
	AN960D416L	. WASHER	1	
	25-61099- 9	. BUSHING, CONTROL SYS	1	
	AN960D416	. WASHER	1	
	AN364-428	. NUT	1	
- 14	NAS464-4A14	. BOLT	1	
	AN960D416L	. WASHER	1	
	AN960D416	. WASHER	1	
	AN364-428	. NUT	1	
		¤----¤-¤-¤----¤		
- 15	25-61270- 1	. CARTRIDGE ASSY, STABILATOR FEEL SYSTEM SPRING, SEE FIG. 148	1	
		ATTACHING PARTS		
- 16	NAS464-4A16	. BOLT	1	
	AN960D416	. WASHER	3	
	AN364-428	. NUT	1	
- 17	NAS464-4A14	. BOLT	1	
	AN960D416L	. WASHER	1	
	AN960D416	. WASHER	1	
	AN364-428	. NUT	1	
		¤----¤-¤-¤----¤		
- 18	25-61309- 1	. LINK ASSEMBLY, STABILATOR FEEL SYSTEM	2	
		ATTACHING PARTS		
- 19	NAS464-4A33	. BOLT	1	
	4M36-02004	. WASHER (MDA)	2	
	AN364-428	. NUT	1	
- 20	NAS464-6A33	. BOLT	1	
	AN960D616	. WASHER	2	
	AN364-624	. NUT	1	
		¤----¤-¤-¤----¤		
	B4	. . BEARING (SHA)	1	
- 21	25-61350- 3	. GUARD, STABILATOR FEEL SYSTEM CABLE LH	1	
- 22	25-61350- 4	. GUARD, STABILATOR FEEL SYSTEM CABLE RH	1	
		ATTACHING PARTS		
- 23	AN3-21A	. BOLT	1	
	AN960D10	. WASHER	2	
	NAS43-3-83	. SPACER	1	
	AN364-1032	. NUT	1	
- 24	AN393-55	. PIN, FLAT HEAD	3	
	AN380-2-2	. PIN, COTTER	3	

FIGURE & INDEX NUMBER	PART NUMBER	1 2 3 4 5 6 7 DESCRIPTION	UNITS PER ASS'Y	USABLE ON CODE
147 -		ATTACHING PARTS (CONT)		
- 25	NAS464-5A34	• BOLT	1	
	AN960D516	• WASHER	2	
	AN364-524	• NUT	1	
- 26	AN4-25A	• BOLT	1	
	AN960D416	• WASHER	3	
	AN364-428	• NUT	1	
		¤----¤-¤-¤----¤		
- 27	25-61367- 3	• STOP, STABILATOR FEEL SYSTEM	1	
- 28	NAS428H4-11	• BOLT	1	
	AN960D416	• WASHER	2	
	AN315-4R	• NUT	2	
- 29	25-61340- 1	• SECTOR ASSEMBLY, STABILATOR FEEL SYSTEM	1	
- 30	DW5	• • BEARING (FAF)	1	
- 31	AN206DSP6	• • BEARING	1	
- 32	25-61343- 1	• BELL CRANK ASSEMBLY, STABILATOR FEEL SYSTEM	1	
		ATTACHING PARTS		
- 33	NAS464-6A29	• BOLT	1	
	AN960D616	• WASHER	3	
	AN364-624	• NUT	1	
		¤----¤-¤-¤----¤		
	DW6	• • BEARING (FAF)	1	
- 34	25-61347- 1	• TUBE ASSY, STABILATOR FEEL SYS BELL CRANK SUP.	1	
		ATTACHING PARTS		
- 35	AN4-25A	• BOLT	2	
	AN960D416L	• WASHER	2	
	AN960D416	• WASHER	2	
	AN364-428	• NUT	2	
		¤----¤-¤-¤----¤		
- 36	25-61306- 3	• • SUPPORT, STABILATOR FEEL SYSTEM IDLER	1	
		ATTACHING PARTS		
- 37	AN4-30A	• • BOLT	1	
	AN960D416	• • WASHER	1	
	AN960D416L	• • WASHER	1	
	AN364-428	• • NUT	1	
		¤----¤-¤-¤----¤		
- 38	25-61307- 3	• • SUPPORT, STABILATOR FEEL SYSTEM BELL CRANK	1	
		ATTACHING PARTS		
- 39	AN5-31A	• • BOLT	1	
	AN960D516	• • WASHER	2	
	AN960D516L	• • WASHER	1	
	AN364-524	• • NUT	1	
		¤----¤-¤-¤----¤		
- 40	25-61347- 3	• • TUBE	1	
- 41	25-61347- 5	• • BLOCK	1	
- 42	25-61347- 7	• • BLOCK	1	
- 43	25-61303- 3	• BRACKET, STABILATOR FEEL TRIM ACTUATOR WIRE SUPPORT	1	
		ATTACHING PARTS		
- 44	AN4-36A	• BOLT	1	
	AN960D416L	• WASHER	1	
	NAS43-4-127	• SPACER	1	
	AN960D416	• WASHER	1	
	AN364-428	• NUT	1	
		¤----¤-¤-¤----¤		
- 45	25-61311- 1	• ARM ASSY, STABILATOR FEEL SYS BELL CRANK SUP.	1	
		ATTACHING PARTS		
- 46	AN4-6A	• BOLT	4	
	AN960D416L	• WASHER	4	
	AN960D416	• WASHER	8	
	AN364-428	• NUT	4	
- 47	AN4-7A	• BOLT	4	
	AN960D416	• WASHER	12	
	AN364-428	• NUT	4	
		¤----¤-¤-¤----¤		
	AN200KP8	• • BEARING	2	
- 48	25-61320- 1	• BALANCE ASSEMBLY, STABILATOR FEEL SYSTEM, SEE FIG. 150	1	
		ATTACHING PARTS		
- 49	25-61346- 3	• PIN, STABILATOR FEEL SYSTEM	2	
		¤----¤-¤-¤----¤		
- 50	25-61255- 1	• CABLE ASSY, ELEVATOR FEEL SYSTEM STOP	1	

FIGURE & INDEX NUMBER	PART NUMBER	1 2 3 4 5 6 7 DESCRIPTION	UNITS PER ASS'Y	USABLE ON CODE
147 - - 51		ATTACHING PARTS		
	AN4-7	• BOLT	1	
	AN960D416L	• WASHER	1	
	AN960D416	• WASHER	1	
	AN310-4	• NUT	1	
	AN380-2-3	• PIN, COTTER	1	
		¤----¤-¤-¤----¤		
	25-61256- 3	• • CLEVIS, ELEVATOR FEEL SYSTEM STOP	1	
	AN667-5	• • TERMINAL	1	
	AN664C5	• • TERMINAL	1	

Aft Fuselage

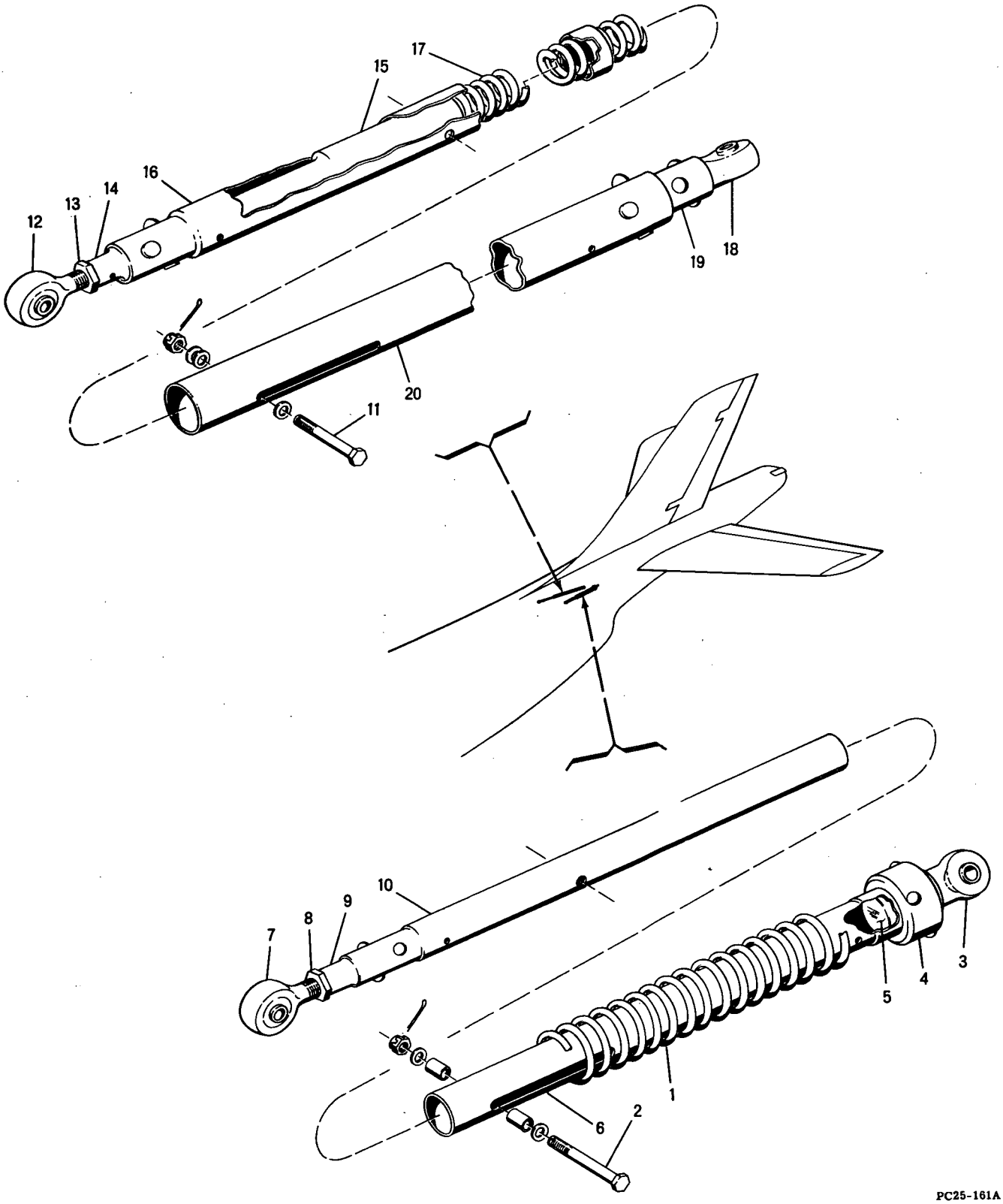

Figure 148 - Stabilator Feel System Spring Cartridge Assemblies

FIGURE & INDEX NUMBER	PART NUMBER	1 2 3 4 5 6 7 DESCRIPTION	UNITS PER ASS'Y	USABLE ON CODE
148 -	25-61283- 1	CARTRIDGE ASSY, STABILATOR FEEL SYSTEM SPRING, SEE FIG. 147-12 FOR NEXT HIGHER ASSY	REF	
- 1	25-61234- 3	. SPRING, STABILATOR FEEL SYS SPRING CARTRIDGE COMPRESSION	1	
		ATTACHING PARTS		
- 2	AN3-17	. BOLT	1	
	AN960D10L	. WASHER	1	
	25-61283- 3	. SPACER	2	
	AN960D10	. WASHER	1	
	AN320-3	. NUT	1	
	AN380-2-2	. PIN, COTTER	1	
		¤----¤-¤-¤----¤		
	25-61285- 1	. ROD ASSY, STABILATOR FEEL SYS SPRING CARTRIDGE	1	
- 3	RE4M6	. . BEARING, ROD END (FAF)	1	
- 4	25-61284- 3	. . COLLAR, STABILATOR FEEL SYSTEM SPRING	1	
- 5	25-61070- 3	. . ADAPTER, ROD END	1	
- 6	25-61285- 5	. . TUBE	1	
	25-61285- 3	. ROD ASSY, STABILATOR FEEL SYS SPRING CARTRIDGE	1	
- 7	RE4M6	. . BEARING, ROD END (FAF)	1	
- 8	AN316-6R	. . NUT	1	
- 9	25-61066- 3	. . ADAPTER, ADJUSTABLE ROD END	1	
- 10	25-61285- 7	. . TUBE	1	
	25-61270- 1	CARTRIDGE ASSY, STABILATOR FEEL SYSTEM SPRING, SEE FIG. 147-15 FOR NEXT HIGHER ASSY	REF	
	25-61274- 3	. ROD ASSY, STABILATOR FEEL SYS SPRING CARTRIDGE	1	
		ATTACHING PARTS		
- 11	AN3-15	. BOLT	1	
	AN960D10	. WASHER	3	
	AN320-3	. NUT	1	
	AN380-2-2	. PIN, COTTEP	1	
		¤----¤-¤-¤----¤		
- 12	RE4M6	. . BEARING, ROD END (FAF)	1	
- 13	AN316-6R	. . NUT	1	
- 14	25-61073- 3	. . ADAPTER, ADJUSTABLE ROD END	1	
- 15	25-61254- 3	. . SLEEVE, STABILATOR FEEL SYSTEM SPRING CARTRIDGE	1	
- 16	25-61274- 7	. . TUBE	1	
- 17	25-61235- 3	. SPRING, STABILATOR FEEL SYSTEM SPRING CARTRIDGE COMPRESSION	1	
	25-61274- 1	. ROD ASSY, STABILATOR SYSTEM SPRING CARTRIDGE	1	
- 18	RE4H6	. . BEARING, ROD END (FAF)	1	
- 19	25-61272- 3	. . ADAPTER, ROD END STABILATOR FEEL SYS SPRING CARTRIDGE	1	
- 20	25-61274- 5	. . TUBE	1	

Aft Fuselage

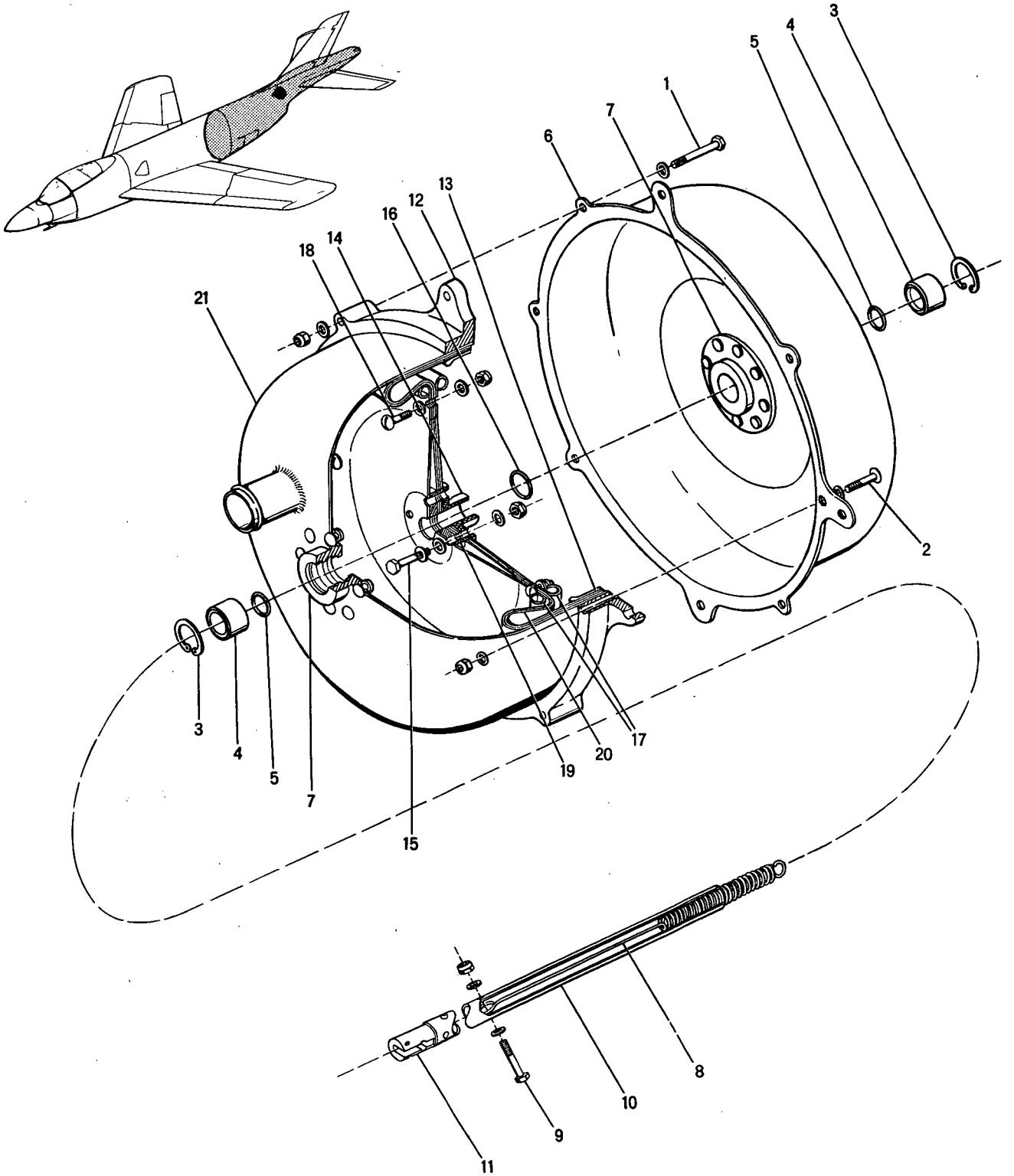

Figure 149 - Stabilator Feel System Bellows Assembly

FIGURE & INDEX NUMBER	PART NUMBER	1 2 3 4 5 6 7 DESCRIPTION	UNITS PER ASS'Y	USABLE ON CODE
149 -	25-61315- 1	BELLOWS ASSY, STABILATOR FEEL SYSTEM, SEE FIG. 147-1 FOR NEXT HIGHER ASSEMBLY	REF	
- 1	AN3-14A	• BOLT	5	
	AN960D10L	• WASHER	10	
	AN364-1032	• NUT	5	
- 2	AN509-10R25	• SCREW	1	
	AN960D10	• WASHER	2	
	AN364-1032	• NUT	1	
- 3	NAS50-100	• RING, INTERNAL RETAINER	2	
- 4	23-63102- 3	• BEARING, STABILATOR FEEL SYSTEM BELLOWS	2	
- 5	AN6227B18	• PACKING, O RING	2	
- 6	25-61360- 7	• BELL, STABILATOR FEEL SYSTEM BELLOWS	1	
- 7	23-63106- 3	• HOUSING, STABILATOR FEEL SYSTEM ROD BEARING	2	
- 8	25-61397- 3	• SPRING, STABILATOR FEEL SYS BELLOWS EXTENSION	1	
		ATTACHING PARTS		
- 9	AN23-21A	• BOLT	1	
	AN960D10	• WASHER	2	
	AN364-1032	• NUT	1	
		¤----¤-¤-¤----¤		
- 10	25-61365- 1	• ROD ASSY, STABILATOR FEEL SYSTEM BELLOWS	1	
- 11	25-61364- 3	• • ROD END, STABILATOR FEEL SYSTEM BELLOWS	1	
- 12	25-61359- 3	• HOOP, STABILATOR FEEL SYSTEM BELLOWS	1	
- 13	23-63120- 3	• STRAP, STABILATOR FEEL SYSTEM BELLOWS	1	
- 14	25-61362- 3	• COLLAR, STABILATOR FEEL SYSTEM DIAPHRAGM	1	
		ATTACHING PARTS		
- 15	AN3-11A	• BOLT	4	
	AN960D10L	• WASHER	12	
	AN364-1032	• NUT	4	
		¤----¤-¤-¤----¤		
- 16	AN6227B12	• PACKING, O RING	1	
- 17	23-63107- 3	• DIAPHRAGM, STABILATOR, FEEL SYSTEM	2	
		ATTACHING PARTS		
- 18	AN23-8A	• BOLT	8	
	AN960D10L	• WASHER	16	
	AN364-1032	• NUT	8	
		¤----¤-¤-¤----¤		
- 19	23-63108- 3	• SPACER, STABILATOR FEEL SYSTEM DIAPHRAGM	1	
- 20	25-61363-301	• SKIRT ASSY, STABILATOR FEEL SYSTEM BELLOWS	1	
- 21	25-61360- 1	• BELL ASSY, STABILATOR FEEL SYSTEM BELLOWS	1	

Aft Fuselage

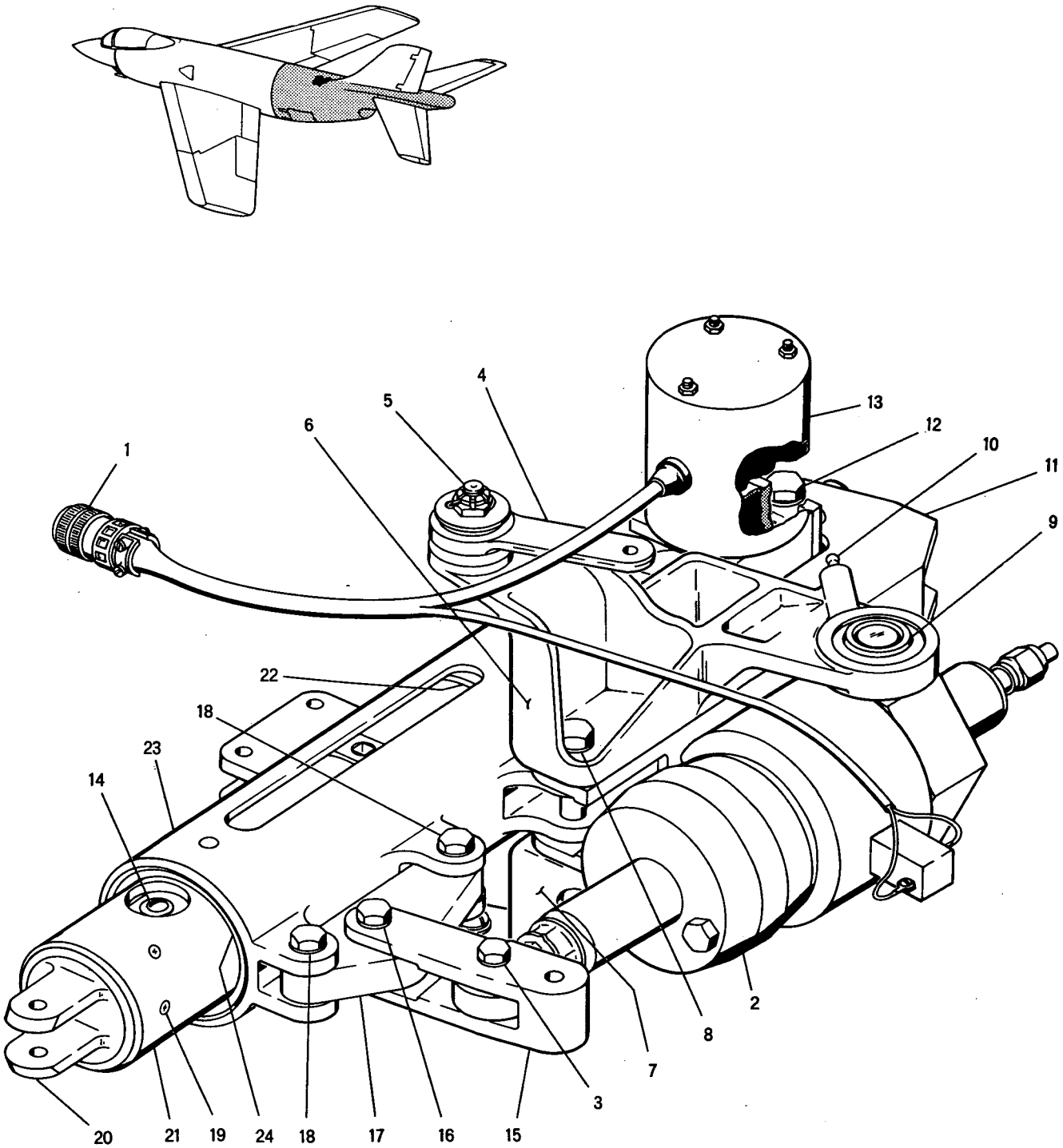

Figure 150 -- Stabilator Feel System Balance Assembly

FIGURE & INDEX NUMBER	PART NUMBER	1 2 3 4 5 6 7 DESCRIPTION	UNITS PER ASS'Y	USABLE ON CODE
150 -	25-61320- 1	BALANCE ASSEMBLY, STABILATOR FEEL SYSTEM, SEE FIG. 147-48 FOR NEXT HIGHER ASSEMBLY	REF	
- 1	3106BS22-19P	• PLUG (CED) USE WITH MS29513-22 O RING, ALTERNATE AN3106-22-19P	1	
- 2	25-69319- 1	• DAMPER ASSY, STABILATOR FEEL SYS VISCOUS SEE FIG. 152	1	
		ATTACHING PARTS		
- 3	NAS464-4A17	• BOLT	1	
	AN960D416	• WASHER	2	
	AN364-428	• NUT	1	
		¤----¤-¤-¤----¤		
- 4	25-61356- 1	• LINK ASSY, STABILATOR FEEL SYSTEM SPRING	2	
		ATTACHING PARTS		
- 5	AN24-18	• BOLT	2	
	AN960D416L	• WASHER	2	
	AN970-4	• WASHER	2	
	AN320-4	• NUT	2	
	AN380-2-3	• PIN, COTTER	2	
		¤----¤-¤-¤----¤		
	AN200KS4	• • BEARING	1	
- 6	25-61308- 1	• SUPPORT ASSY, STABILATOR FEEL SYSTEM BALANCE DAMPER LH	1	
- 7	25-61308- 2	• SUPPORT ASSY, STABILATOR FEEL SYSTEM BALANCE DAMPER RH	1	
		ATTACHING PARTS		
- 8	AN5-23A	• BOLT	2	
	AN960D516L	• WASHER	2	
	AN960D516	• WASHER	4	
	AN364-524	• NUT	2	
		¤----¤-¤-¤----¤		
- 9	BSN10003G-C	• • BEARING (SWPC)	1	
- 10	AN944-101	• • FITTING, LUB	1	
- 11	25-61318- 3	• SUPPORT, STABILATOR FEEL SYSTEM TRIM ACTUATOR	1	
		ATTACHING PARTS		
- 12	NAS464-5A24	• BOLT	1	
	AN960D516	• WASHER	2	
	AN364-524	• NUT	1	
		¤----¤-¤-¤----¤		
- 13	R144M12-2	• ACTUATOR, STABILATOR ARTIFICIAL FEEL TRIM (ARBN) MCDONNELL SPEC 25-69059-1	1	
		ATTACHING PARTS		
- 14	AN23-26A	• BOLT	1	
	AN960D10	• WASHER	2	
	25-61050- 7	• BUSHING, CONTROL SYS	1	
	AN364-1032	• NUT	1	
		¤----¤-¤-¤----¤		
- 15	25-61312- 3	• LINK, STABILATOR FEEL SYSTEM DAMPER	1	
		ATTACHING PARTS		
- 16	NAS464-4A17	• BOLT	1	
	AN960D416	• WASHER	2	
	AN364-428	• NUT	1	
		¤----¤-¤-¤----¤		
- 17	25-61341- 1	• BLOCK ASSY, STABILATOR FEEL SYSTEM	1	
		ATTACHING PARTS		
- 18	NAS464-4A17	• BOLT	2	
	AN960D416	• WASHER	2	
	AN960D416L	• WASHER	2	
	AN364-428	• NUT	2	
		¤----¤-¤-¤----¤		
	AN207DP4	• • BEARING	1	
- 19	25-61392- 3	• RIVET, SPECIAL LENGTH DIAMETER	3	
- 20	25-61314- 5	• HEAD, STABILATOR FEEL SYSTEM BELL CRANK PISTON	1	
- 21	25-61342- 1	• PISTON ASSY, STABILATOR FEEL SYSTEM BELL CRANK	1	
- 22	25-61342- 7	• • BEARING, ALTERED FROM 23-63088-5	1	
- 23	25-61317- 1	• CYLINDER ASSY, STABILATOR FEEL SYSTEM	1	
- 24	25-61317- 7	• • BEARING, ALTERED FROM 23-63134-3	1	

Aft Fuselage

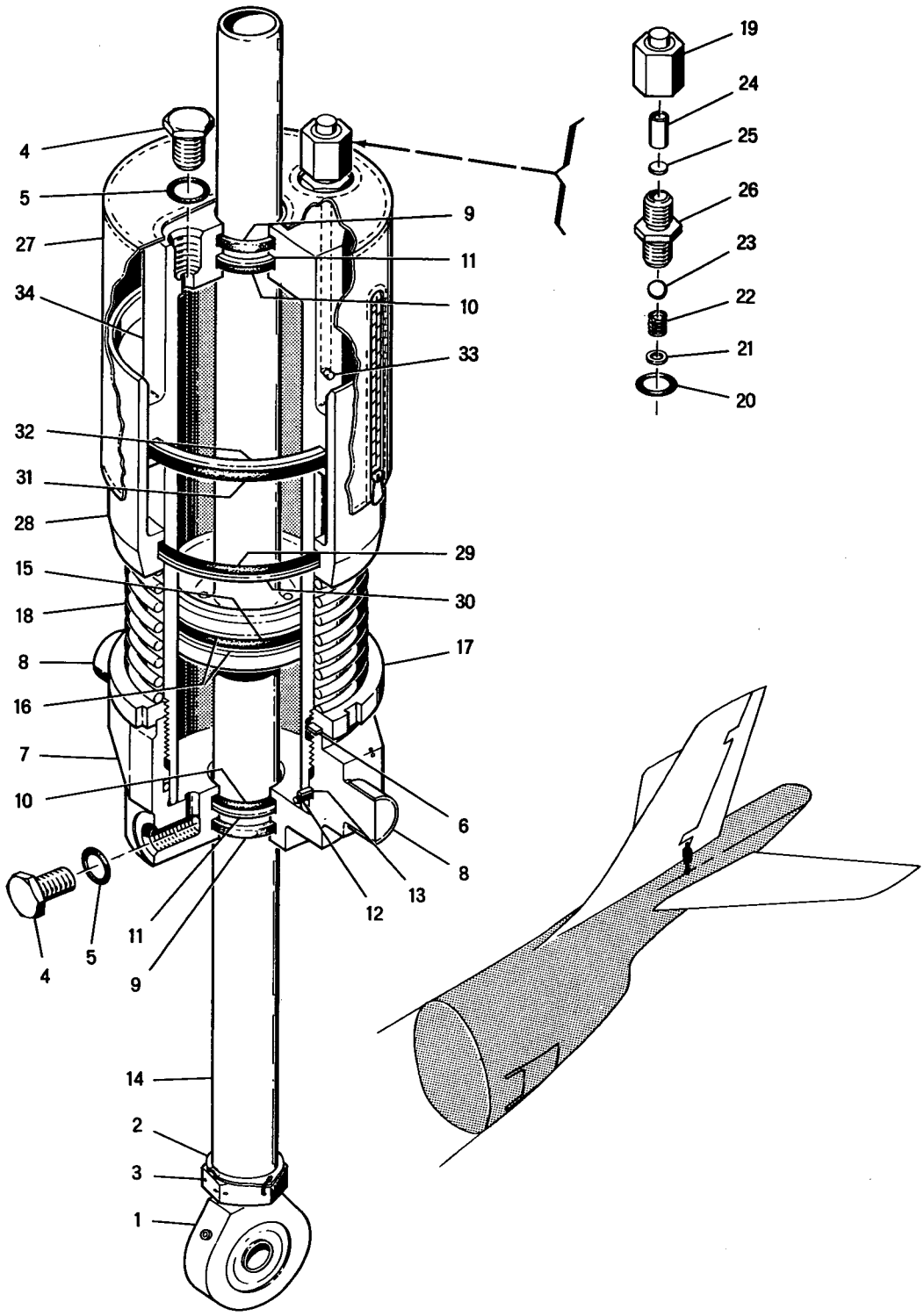

Figure 151 -- Stabilator Viscous Damper Assembly

FIGURE & INDEX NUMBER	PART NUMBER	1 2 3 4 5 6 7 DESCRIPTION	UNITS PER ASS'Y	USABLE ON CODE
151 -	25-69381- 1	DAMPER ASSY, STABILATOR VISCOUS, SEE FIG. 146-129 FOR NEXT HIGHER ASSEMBLY	REF	
- 1	25-69386- 1	• ROD END ASSEMBLY, STABILATOR DAMPER	1	
	NAS516-1	• • FITTING, LUB	1	
	BLN10003G-C	• • BEARING (SWPC)	1	
- 2	9M103-12	• WASHER (MDA)	1	
- 3	NAS509-12	• NUT, JAM	1	
- 4	AN814-4DL	• PLUG	2	
- 5	AN6290-4	• GASKET	2	
- 6	25-69323- 3	• KEY, STABILATOR DAMPER	1	
- 7	25-69382- 1	• TRUNNION ASSEMBLY, STABILATOR DAMPER	1	
- 8	25-69324- 3	• • BUSHING, STABILATOR DAMPER TRUNNION	2	
- 9	AN6232C3-1/2	• FELT, STRIP PACKING	2	
- 10	AN6227B19	• PACKING, O RING	2	
- 11	MS28782-19	• RING, BACK UP	2	
- 12	AN6230B9	• PACKING, O RING	1	
- 13	MS28783-9	• RING, BACK UP	1	
- 14	25-69385- 3	• PISTON, STABILATOR DAMPER	1	
- 15	AN6227B32	• PACKING, O RING	1	
- 16	MS28782-32	• RING, BACK UP	2	
- 17	25-69387- 3	• NUT, STABILATOR DAMPER LOCK	1	
- 18	25-69325- 3	• SPRING, STABILATOR DAMPER COMPRESSION	1	
- 19	AN929-4	• CAP ASSY	1	
- 20	AN6290-4	• GASKET	1	
	25-69389- 1	• VALVE ASSEMBLY, FILLER CHECK	1	
- 21	25-69391- 3	• • RETAINER, FILLER CHECK VALVE	1	
- 22	25-69392- 3	• • SPRING, FILLER CHECK VALVE COMPRESSION	1	
- 23	AF216C1-12	• • BALL, METAL	1	
- 24	52-032-156-0500	• • PIN, ROLL (EN)	1	
- 25	25-69393- 3	• • FILTER, FILLER CHECK VALVE	1	
- 26	25-69390- 3	• • BLOCK, FILLER CHECK VALVE	1	
- 27	25-69326- 1	• BOOT ASSEMBLY, STABILATOR VISCOUS DAMPER	1	
	AN229-1AL18-1	• • FASTENER	1	
- 28	25-69384- 3	• BARREL, STABILATOR DAMPER RESERVOIR	1	
- 29	AN6227B39	• PACKING, O RING	1	
- 30	MS28782-39	• RING, BACK UP	1	
- 31	AN6227B42	• PACKING, O RING	1	
- 32	MS28782-42	• RING, BACK UP	1	
- 33	25-69395- 3	• PLUG, STABILATOR DAMPER, ALTERED FROM GOVT. STANDARD PART NO. AN565B8-3	1	
- 34	25-69383- 3	• BARREL, STABILATOR DAMPER	1	

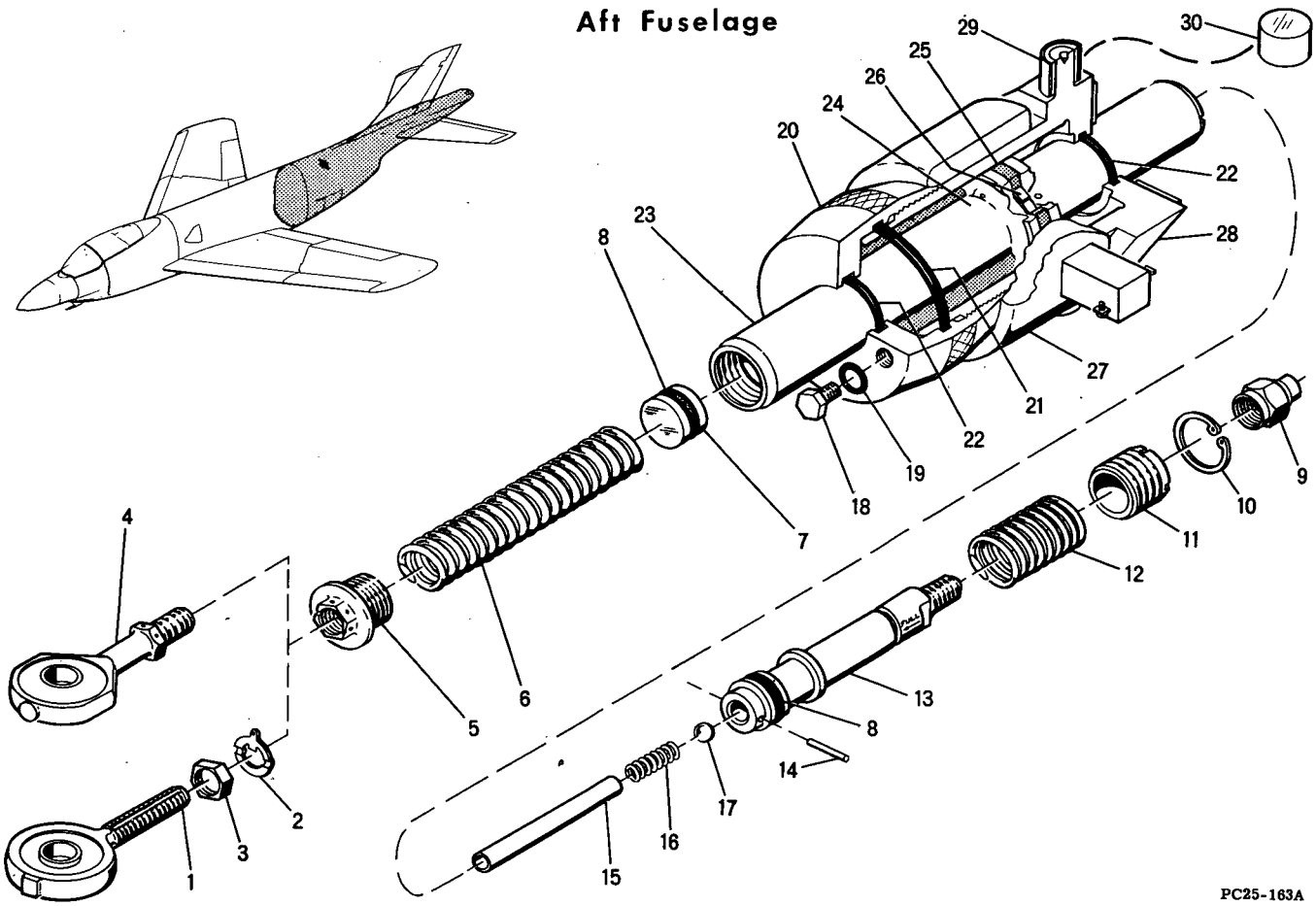

Figure 152 -- Feel System Viscous Damper Assemblies

FIGURE & INDEX NUMBER	PART NUMBER	1 2 3 4 5 6 7 DESCRIPTION	UNITS PER ASS'Y	USABLE ON CODE
152 -	25-69319- 1	DAMPER ASSY, STABILATOR FEEL SYSTEM VISCOUS, SEE FIG. 150-2 FOR NEXT HIGHER ASSEMBLY	REF	
	25-69319- 7	DAMPER ASSY, RUDDER FEEL SYSTEM VISCOUS, SEE FIG. 146-120 FOR NEXT HIGHER ASSEMBLY	REF	
- 1	25-69282- 1	• ROD END ASSY, VISCOUS DAMPER	1	25-69319-1
	AN200KP4	• • BEARING	1	
- 2	9M103-6	• WASHER, LOCK (MDA)	1	25-69319-1
- 3	9M104-6	• NUT, JAM (MDA)	1	25-69319-1
- 4	25-69320- 1	• ROD END ASSY, VISCOUS DAMPER	1	25-69319-7
	BLN7003G-C	• • BEARING (SWPC)	1	
	NAS497	• • FITTING, LUB	1	
- 5	25-69290- 3	• BUSHING, VISCOUS DAMPER ROD END	1	
- 6	25-69286- 3	• SPRING, VISCOUS DAMPER RESERVOIR COMPRESSION	1	
- 7	25-69285- 3	• PISTON, VISCOUS DAMPER RESERVOIR	1	
- 8	AN6227B11	• PACKING, O RING	2	
- 9	AN929-4	• CAP ASSY	1	
- 10	NAS50-87	• RING, INTERNAL RETAINER	1	
- 11	25-69283- 3	• BUSHING, VISCOUS DAMPER GAGE	1	
- 12	25-69287- 3	• SPRING, VISCOUS DAMPER GAGE COMPRESSION	1	
- 13	25-69284- 3	• PISTON, VISCOUS DAMPER GAGE	1	
- 14	52-022-094-0438	• PIN, ROLL (EN)	1	
- 15	NAS43DD1-155	• SPACER	1	
- 16	23-69076- 3	• SPRING, VISCOUS DAMPER FILLER COMPRESSION	1	
- 17	AF216C1-14	• BALL, METAL	1	
- 18	AN814-2DL	• PLUG	1	
- 19	AN6290-2	• GASKET	1	
- 20	25-69281- 3	• CAP, VISCOUS DAMPER END	1	
- 21	AN6230B6	• GASKET, O RING	1	
- 22	GRC6227-19	• PACKING, O RING (GOS)	2	
- 23	25-69280- 5	• PISTON ASSY, VISCOUS DAMPER	1	
- 24	9M26-8-0095	• • PIN, DOWEL (MDA)	1	

FIGURE & INDEX NUMBER	PART NUMBER	1 2 3 4 5 6 7 DESCRIPTION	UNITS PER ASS'Y	USABLE ON CODE
152 - 25	25-69321- 3	• RING, VISCOUS DAMPER PISTON	1	
- 26	25-69322- 3	• RING, VISCOUS DAMPER EXPANDER	1	
- 27	38000-3	• HEATER (ESSX)	1	
- 28	25-69279- 1	• BARREL ASSY, VISCOUS DAMPER, FOR FUTURE PROCUREMENT USE 25-69279-301	1	A-B
	25-69279-301	• BARREL ASSY, VISCOUS DAMPER, USE FOR FUTURE PROCUREMENT TO REPLACE 25-69279-1	1	
- 29	25-69279- 5	• • BUSHING	2	25-69279-1
- 30	25-69279- 7	• • BUSHING	1	25-69279-301

Aft Fuselage

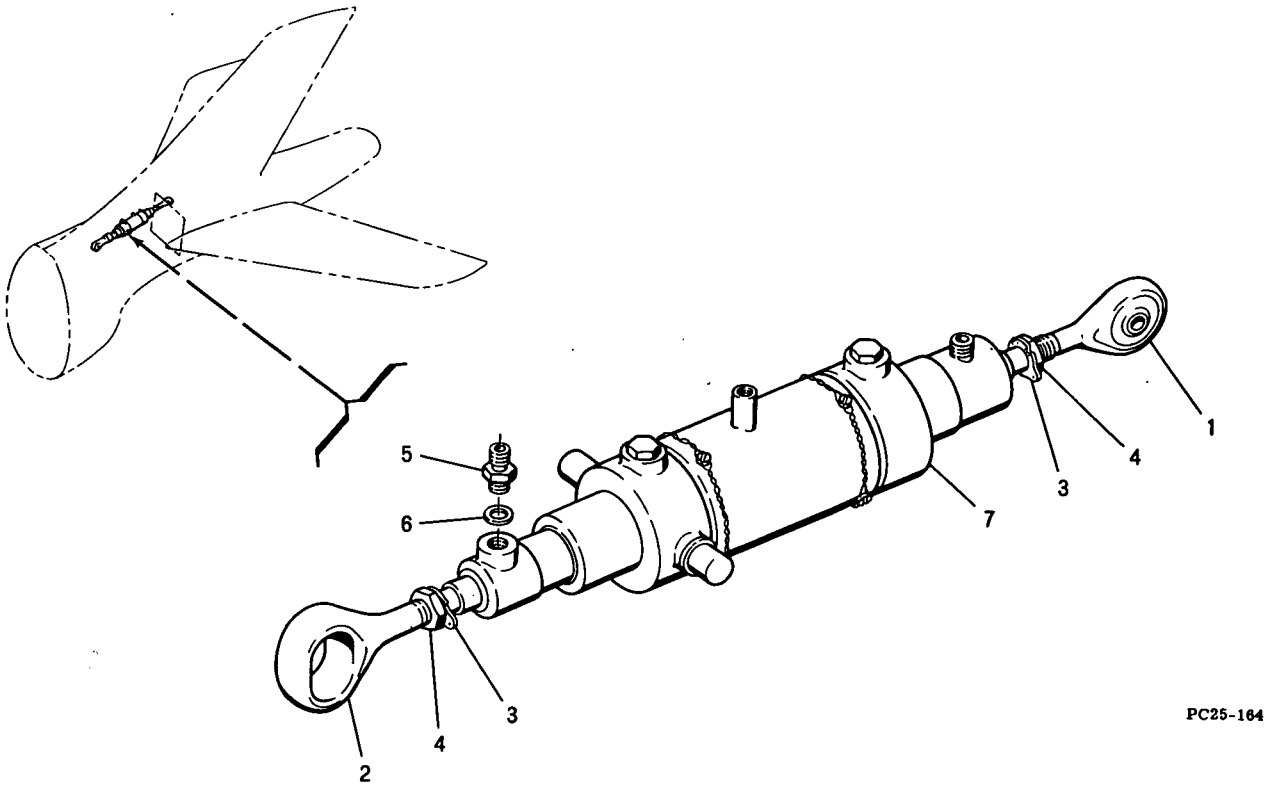

Figure 153 - Rudder Actuator Assembly

FIGURE & INDEX NUMBER	PART NUMBER	1 2 3 4 5 6 7 DESCRIPTION	UNITS PER ASS'Y	USABLE ON CODE
153 -	25-69169- 1	ACTUATOR ASSY, RUDDER, SEE FIG. 146-101 FOR NEXT HIGHER ASSY	REF	
- 1	25-61322- 1	• ROD END ASSY, RUDDER POWER CYLINDER	1	
	AN206DSP5	• • BEARING	1	
- 2	25-61323- 3	• ROD END, RUDDER POWER CYLINDER	1	
- 3	9M103-9	• WASHER, LOCK (MDA)	2	
- 4	9M104-9	• NUT, JAM (MDA)	2	
- 5	MS21902D4	• UNION	1	
- 6	AN6290-4	• GASKET	1	
- 7	10680	• CYLINDER, RUDDER POWER CONTROL (WAH) MCDONNELL SPEC 25-69015-2	1	

Aft Fuselage

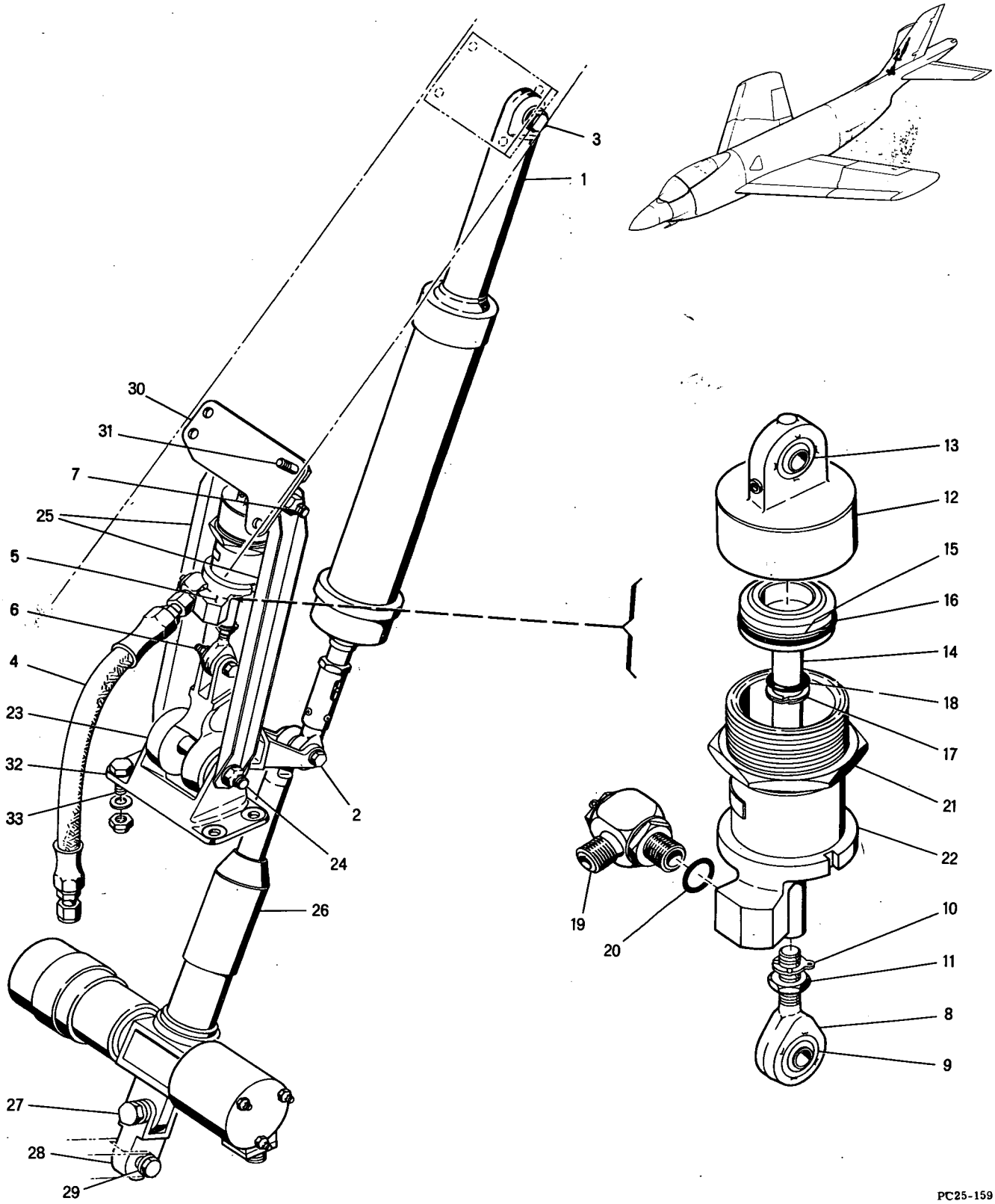

Figure 154 -- Rudder Feel System Installation

FIGURE & INDEX NUMBER	PART NUMBER	1 2 3 4 5 6 7 DESCRIPTION	UNITS PER ASS'Y	USABLE ON CODE
154 -	25-61236- 1	SYSTEM INSTALLATION, RUDDER FEEL, SEE FIG. 1 FOR NEXT HIGHER ASSY	1	
- 1	25-61305- 1	. CARTRIDGE ASSEMBLY, RUDDER FEEL SYSTEM, SEE FIG. 155	1	
		ATTACHING PARTS		
- 2	NAS464-4A24	. BOLT	1	
	AN960D416L	. WASHER	1	
	AN960D416	. WASHER	1	
	AN364-428	. NUT	1	
- 3	NAS464-4A18	. BOLT	1	
	AN960D416	. WASHER	2	
	AN364-428	. NUT	1	
		¤----¤-¤-¤----¤		
- 4	25-69195-129	. HOSE ASSEMBLY, RUDDER FEEL SYSTEM ACTUATOR	1	
	ER6292-4-11.25	. . HOSE ASSEMBLY (WH)	1	
- 5	25-69196- 1	. ACTUATOR ASSEMBLY, RUDDER FEEL SYSTEM	1	
		ATTACHING PARTS		
- 6	NAS464-5A13	. BOLT	1	
	AN960D516L	. WASHER	1	
	AN960D516	. WASHER	1	
	AN364-524	. NUT	1	
- 7	NAS464-5A49	. BOLT	1	
	AN960D516L	. WASHER	1	
	AN960D516	. WASHER	1	
	25-61050- 11	. BUSHING, CONTROL SYSTEM CLOSE TOLERANCE	2	
	AN364-524	. NUT	1	
		¤----¤-¤-¤----¤		
- 8	25-69191- 1	. . ROD END ASSY, RUDDER ARTIFICIAL FEEL CYL	1	
- 9	BLR5000G-C	. . . BEARING (SWPC)	1	
	NAS516-1	. . . FITTING LUB	1	
- 10	9M103-5	. . WASHER, LOCK (MDA)	1	
- 11	NAS509-5	. . NUT, JAM	1	
- 12	25-69199- 1	. . CAP ASSEMBLY, RUDDER FEEL SYSTEM ACTUATOR	1	
- 13	BLR5000G-C	. . . BEARING (SWPC)	1	
	NAS516-1	. . . FITTING, LUB	1	
- 14	25-69198- 3	. . PISTON, RUDDER FEEL SYSTEM ACTUATOR	1	
- 15	SR6144-21	. . RING, BACK UP (SHWS)	1	
- 16	AN6227B21	. . PACKING, O RING	1	
- 17	SR6144-9	. . RING, BACK UP (SHWS)	1	
- 18	AN6227B9	. . PACKING, O RING	1	
- 19	7M7D4	. . SWIVEL ASSY (MDA) RUDDER FEEL SYS ACTUATOR	1	
- 20	AN6227B4	. . PACKING, O RING	1	
- 21	25-69189- 3	. . NUT, RUDDER ARTIFICIAL FEEL CYLINDER LOCK	1	
- 22	25-69197- 3	. . BARREL, RUDDER FEEL SYSTEM ACTUATOR	1	
- 23	25-61238- 1	. BELL CRANK ASSEMBLY, RUDDER FEEL SYSTEM	1	
		ATTACHING PARTS		
- 24	NAS464-6A49	. BOLT	1	
	AN960D616L	. WASHER	1	
	AN960D616	. WASHER	1	
	25-61050- 13	. BUSHING, CONTROL SYSTEM CLOSE TOLERANCE	1	
	AN364-624	. NUT	1	
		¤----¤-¤-¤----¤		
	AN200KP6	. . BEARING	2	
- 25	25-61233- 1	. CHANNEL ASSEMBLY, RUDDER FEEL SYSTEM	2	
- 26	R144M23-1	. ACTUATOR, RUDDER ARTIFICIAL FEEL TRIM (ARBN) MCDONNELL SPEC 25-69061-3	1	
		ATTACHING PARTS		
- 27	NAS464-4A15	. BOLT	1	
	AN960D416	. WASHER	2	
	AN364-428	. NUT	1	
		¤----¤-¤-¤----¤		
- 28	25-61357- 1	. UNIVERSAL ASSEMBLY, RUDDER FEEL SYSTEM	1	
		ATTACHING PARTS		
- 29	NAS464-4A16	. BOLT	1	
	AN960D416L	. WASHER	1	
	AN960D416	. WASHER	1	
	AN364-428	. NUT	1	
		¤----¤-¤-¤----¤		
	AN207DP4	. . BEARING	1	
- 30	25-61232- 3	. BRACKET, HYD CYLINDER RUDDER FEEL SYSTEM SUP.	1	
		ATTACHING PARTS		
- 31	AN4-7A	. BOLT	4	
	AN960D416L	. WASHER	4	
		¤----¤-¤-¤----¤		
- 32	25-61231- 3	. BRACKET, BELL CRANK RUDDER FEEL SYSTEM SUPPORT	1	
		ATTACHING PARTS		
- 33	AN4-10A	. BOLT	4	
	AN960D416	. WASHER	8	
	AN365-428	. NUT	4	
		¤----¤-¤-¤----¤		

Aft Fuselage

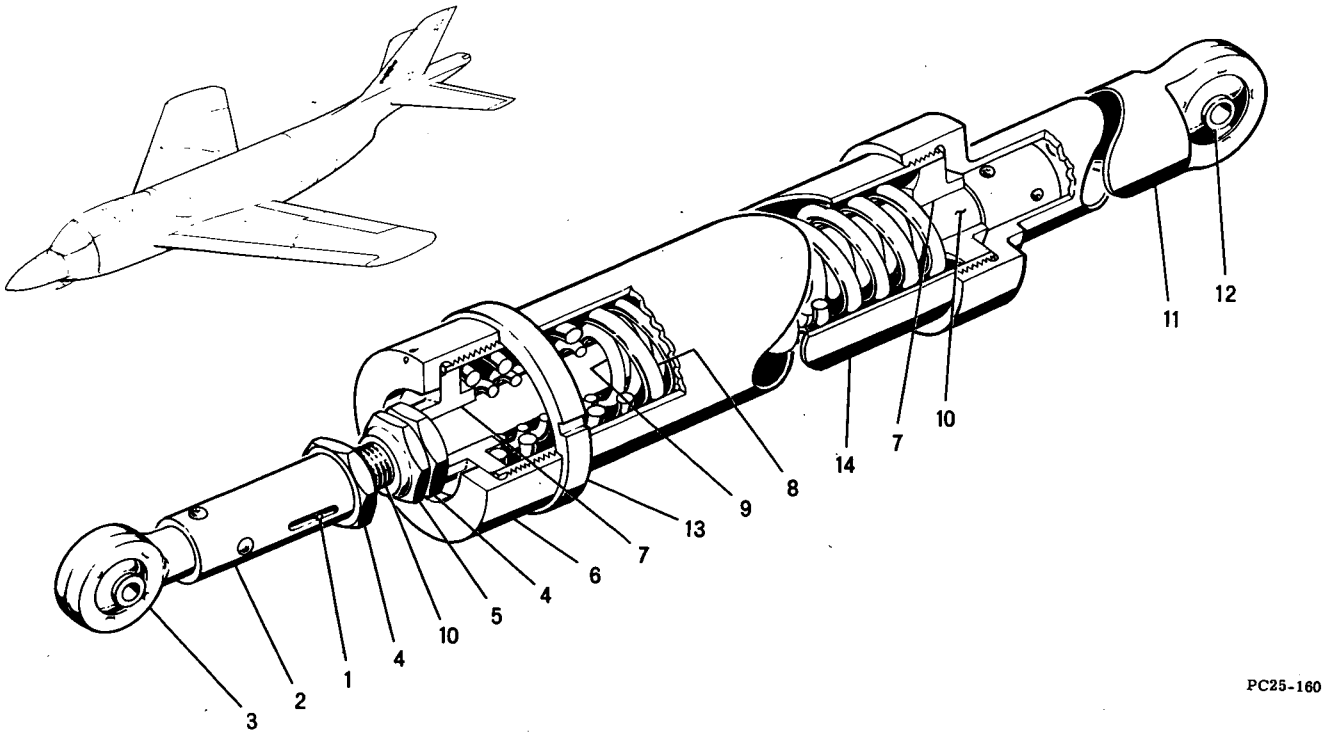

Figure 155 -- Rudder Feel System Spring Cartridge Assembly

FIGURE & INDEX NUMBER	PART NUMBER	1 2 3 4 5 6 7 DESCRIPTION	UNITS PER ASS'Y	USABLE ON CODE
155 -	25-61305- 1	CARTRIDGE ASSEMBLY, RUDDER FEEL SYSTEM SPRING, SEE FIG. 154-1 FOR NEXT HIGHER ASSEMBLY	REF	
- 1	52-022-094-0750	• PIN, ROLL (EN)	1	
- 2	25-61393- 1	• END ASSY, RUDDER FEEL SYSTEM SPRING CARTRIDGE	1	
- 3	RE4H6	• • BEARING, ROD END (FAF)	1	
- 4	AN316-9R	• NUT	2	
- 5	AN364-918	• NUT	1	
- 6	25-61379- 3	• CAP, RUDDER FEEL SYSTEM SPRING CARTRIDGE	1	
- 7	25-61376- 3	• PISTON, RUDDER FEEL SYSTEM SPRING CARTRIDGE	2	
- 8	25-61377- 3	• SPRING, RUDDER FEEL SYSTEM SPRING CARTRIDGE LARGE COMPRESSION	1	
- 9	25-61378- 3	• SPRING, RUDDER FEEL SYSTEM SPRING CARTRIDGE SMALL COMPRESSION	1	
- 10	25-61381- 1	• ROD ASSY, RUDDER FEEL SYSTEM SPRING CARTRIDGE	1	
- 11	25-61380- 1	• FITTING ASSEMBLY, RUDDER FEEL SYSTEM SPRING CARTRIDGE	1	
- 12	AN200KS4	• • BEARING	1	
- 13	25-61391- 3	• NUT, RUDDER FEEL SYSTEM SPRING CARTRIDGE CAP CHECK	1	
- 14	25-61382- 3	• BARREL, RUDDER FEEL SYSTEM SPRING CARTRIDGE	1	

FIGURE & INDEX NUMBER	PART NUMBER	1 2 3 4 5 6 7 DESCRIPTION	UNITS PER ASS'Y	USABLE ON CODE
156 -	25-84010- 1	GEAR INSTALLATION, ARRESTING, SEE FIG. 138-7 FOR NEXT HIGHER ASSY	REF	
	25-84009- 1	• GEAR ASSY, ARRESTING	1	
		ATTACHING PARTS		
- 1	AN6-16	• BOLT	2	
	AN960D616	• WASHER	6	
	AN310-6	• NUT	2	
	AN380-3-3	• PIN, COTTER	2	
- 2	NAS150-79	• BOLT	2	
	AN960-1016	• WASHER	4	
	EB108	• NUT (EN)	2	
- 3	25-84019- 3	• WASHER, ARRESTING GEAR	2	
- 4	25-84014- 3	• BUSHING, ARRESTING GEAR TO FUSELAGE ATTACHMENT	2	
		¤----¤-¤-¤----¤		
- 5	NAF603714	• • POINT, ARRESTING GEAR, GFP	1	
		ATTACHING PARTS		
- 6	NAS464-12-48	• • BOLT	1	
	AN960-1216L	• • WASHER	1	
	AN960-1216	• • WASHER	2	
	AN320-12	• • NUT	1	
	AN381-4-20	• • PIN, COTTER	1	
		¤----¤-¤-¤----¤		
- 7	25-84009- 3	• • GEAR ASSEMBLY, ARRESTING	1	
- 8	25-84057- 3	• • • ROLLER, ARRESTING GEAR UP LATCH	1	
		ATTACHING PARTS		
- 9	AN4-27A	• • • BOLT	1	
	AN960-416L	• • • WASHER	2	
	AN364-428	• • • NUT	1	
		¤----¤-¤-¤----¤		
- 10	AN201KP4A	• • • BEARING	2	
- 11	25-84012- 5	• • • FITTING, ARRESTING HOOK POINT ATTACHMENT	1	
- 12	25-84013- 3	• • • TUBE, ARRESTING HOOK	2	
- 13	25-84011- 1	• • • FITTING ASSY, ARRESTING HOOK ATTACHMENT LH	1	
- 14	25-84011- 2	• • • FITTING ASSY, ARRESTING HOOK ATTACHMENT RH	1	
- 15	1637B	• • • • FITTING, LUBRICATION (AL)	1	
- 16	25-84018- 3	• • • • BUSHING, ARRESTING HOOK ATTACHMENT FITTING	2	
- 17	4M33P6-009	• • • • BUSHING (MDA)	2	
- 18	25-69026-305	• CYLINDER ASSY, ARRESTING GEAR SHOCK ABSORBER, SEE FIG. 157	2	
		ATTACHING PARTS		
- 19	NAS148-72	• BOLT	2	
	NAS143-8C	• WASHER	2	
	AN960-816	• WASHER	4	
	EB080	• NUT (EN)	2	
		¤----¤-¤-¤----¤		
- 20	NAS72-8-206	• BUSHING	2	
	25-84015- 1	LATCH INSTL, ARRESTING GEAR, SEE FIG. 138-8 FOR NEXT HIGHER ASSY	REF	
- 21	23-84071- 3	• SPRING, ARRESTING GEAR UP LATCH PAWL EXTENSION	1	
- 22	25-84020- 3	• PAWL, ARRESTING GEAR UP LATCH	1	
		ATTACHING PARTS		
- 23	AN394-19	• PIN, FLAT HEAD	1	
	AN960D416L	• WASHER	2	
	AN380-2-3	• PIN, COTTER	1	
		¤----¤-¤-¤----¤		
- 24	25-84054- 3	• CRANK, ARRESTING GEAR UP LATCH	1	
		ATTACHING PARTS		
- 25	AN4-24A	• BOLT	1	
	AN960D416L	• WASHER	1	
	AN960D416	• WASHER	1	
	AN364-428	• NUT	1	
- 26	AN393-25	• PIN, FLAT HEAD	1	
	AN960D10	• WASHER	2	
	AN380-2-3	• PIN, COTTER	1	
		¤----¤-¤-¤----¤		
- 27	NAS74A4-110	• BUSHING	1	
- 28	23-84068- 3	• LINK, ARRESTING GEAR UP LATCH	1	
		ATTACHING PARTS		
- 29	AN393-23	• PIN, FLAT HEAD	1	
	AN960D10	• WASHER	2	
	AN380-2-3	• PIN, COTTER	1	
		¤----¤-¤-¤----¤		

Aft Fuselage

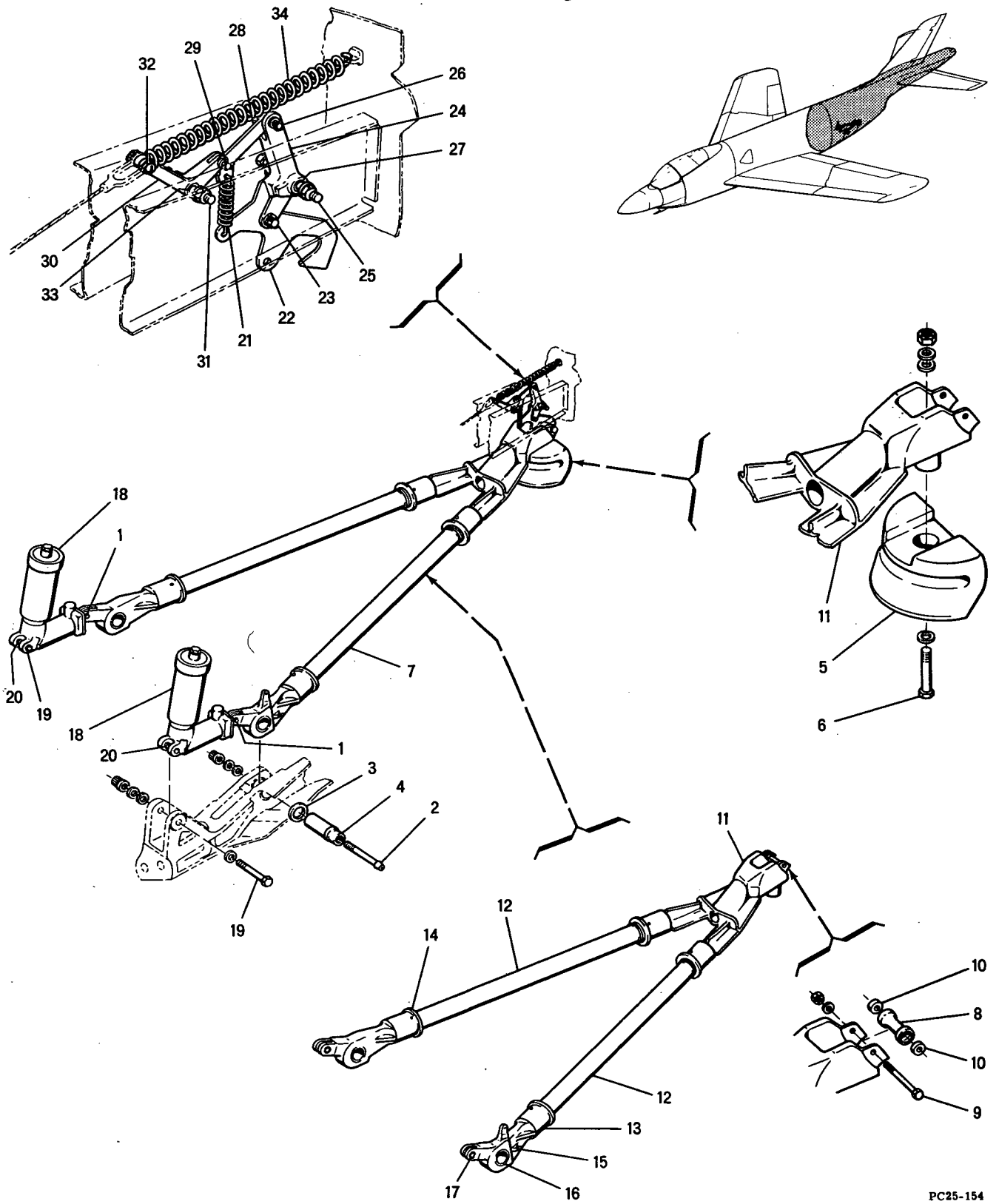

Figure 156 - Arresting Gear and Arresting Gear Latch Installations

FIGURE & INDEX NUMBER	PART NUMBER	1 2 3 4 5 6 7 DESCRIPTION	UNITS PER ASS'Y	USABLE ON CODE
156 - 30	23-84069- 3	• LEVER, ARRESTING GEAR UP LATCH	1	
		ATTACHING PARTS		
- 31	AN4-24A	• BOLT	1	
	AN960D416L	• WASHER	1	
	AN960D416	• WASHER	1	
	AN364-428	• NUT	1	
- 32	AN23-16	• BOLT	1	
	4M36-01006	• WASHER (MDA)	1	
	NAS43HT3-8	• SPACER	1	
	AN960D10	• WASHER	1	
	AN320-3	• NUT	1	
	AN380-2-3	• PIN, COTTER	1	
		¤----¤-¤-¤----¤		
- 33	NAS74A4-110	• BUSHING	1	
- 34	25-84053- 3	• SPRING, ARRESTING GEAR UP LATCH EXTENSION	1	

Aft Fuselage

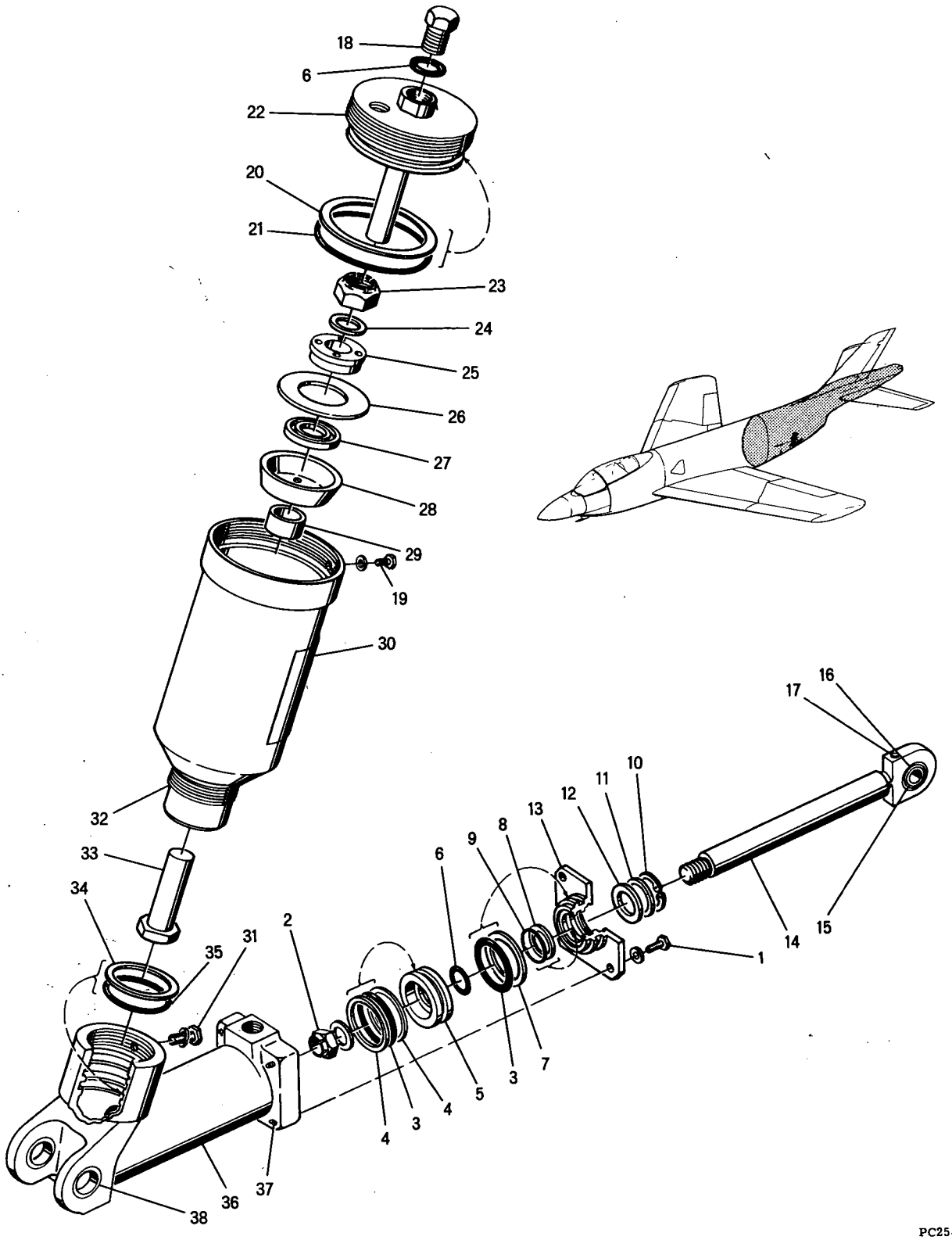

Figure 157 - Arresting Gear Shock Absorbing Cylinder Assembly

FIGURE & INDEX NUMBER	PART NUMBER	1 2 3 4 5 6 7 DESCRIPTION	UNITS PER ASS'Y	USABLE ON CODE
157 -	25-69026-305	CYLINDER ASSY, ARRESTING GEAR SHOCK ABSORBING, SEE FIG. 156-18 FOR NEXT HIGHER ASSEMBLY	REF	
- 1	NAS144DH13	• BOLT	4	
	NAS143-4C	• WASHER	4	
- 2	AN363-720	• NUT	1	
	AN960-716	• WASHER, USE WITH INDEX 2	1	
- 3	AN6227B25	• PACKING, O RING	2	
- 4	6144-25	• RING, BACK UP (SHWS)	2	
- 5	25-69112- 3	• PISTON, ARRESTING GEAR CYLINDER	1	
- 6	AN6290-4	• GASKET	2	
- 7	AN6246-25	• RING, BACK UP	1	
- 8	6144-14	• RING, BACK UP (SHWS)	1	
- 9	AN6227B14	• PACKING, O RING	1	
- 10	NAS50-118	• RING, INTERNAL RETAINER	1	
- 11	4M36-07003	• WASHER (MDA)	1	
- 12	AN6231A5	• SCRAPER	1	
- 13	25-69111- 5	• PLUG, ARRESTING GEAR ACTUATOR END	1	
- 14	25-69113- 1	• ROD ASSEMBLY, ARRESTING GEAR CYLINDER PISTON	1	
- 15	NAS76A6-016P	• • BUSHING	1	
- 16	BSN8003G-C	• • BEARING (SWPC)	1	
- 17	NAS497	• • FITTING, LUB	1	
- 18	AN814-4DL	• PLUG	1	
- 19	AN3H3A	• BOLT	1	
	AN960D10	• WASHER	1	
- 20	AN6246-37	• RING, BACK UP	1	
- 21	AN6227B37	• PACKING, O RING	1	
- 22	25-69119- 1	• CAP ASSEMBLY, ARRESTING GEAR CYLINDER DASHPOT	1	
- 23	AN363-1018	• NUT	1	
- 24	4M36-05005	• WASHER (MDA)	1	
- 25	25-69115- 3	• RETAINER, ARRESTING GEAR CYLINDER VALVE	1	
- 26	25-69116- 5	• VALVE, ARRESTING GEAR CYLINDER METERING	1	
- 27	25-69114- 5	• PLATE, ARRESTING GEAR CYLINDER VALVE	1	
- 28	25-69064- 3	• CUP, ARRESTING GEAR CYLINDER SHOCK ABSORBER	1	
- 29	25-69076- 3	• SPACER, ARRESTING GEAR CYLINDER SHOCK ABSORBER	1	
- 30	25-89028- 9	• NAMEPLATE, ARRESTING GEAR CYLINDER	1	
- 31	AN5H5A	• BOLT	1	
	AN960D516	• WASHER	1	
- 32	25-69118- 5	• DASHPOT, ARRESTING GEAR CYLINDER	1	
- 33	AN180-24	• BOLT	1	
- 34	AN6246-29	• RING, BACK UP	1	
- 35	AN6227B29	• PACKING, O RING	1	
- 36	25-69077- 1	• BODY ASSEMBLY, ARRESTING GEAR CYLINDER	1	
- 37	1191-4CNX1/2	• • INSERT (AF)	4	
- 38	4M33P11-009	• • BUSHING (MDA)	2	

Aft Fuselage

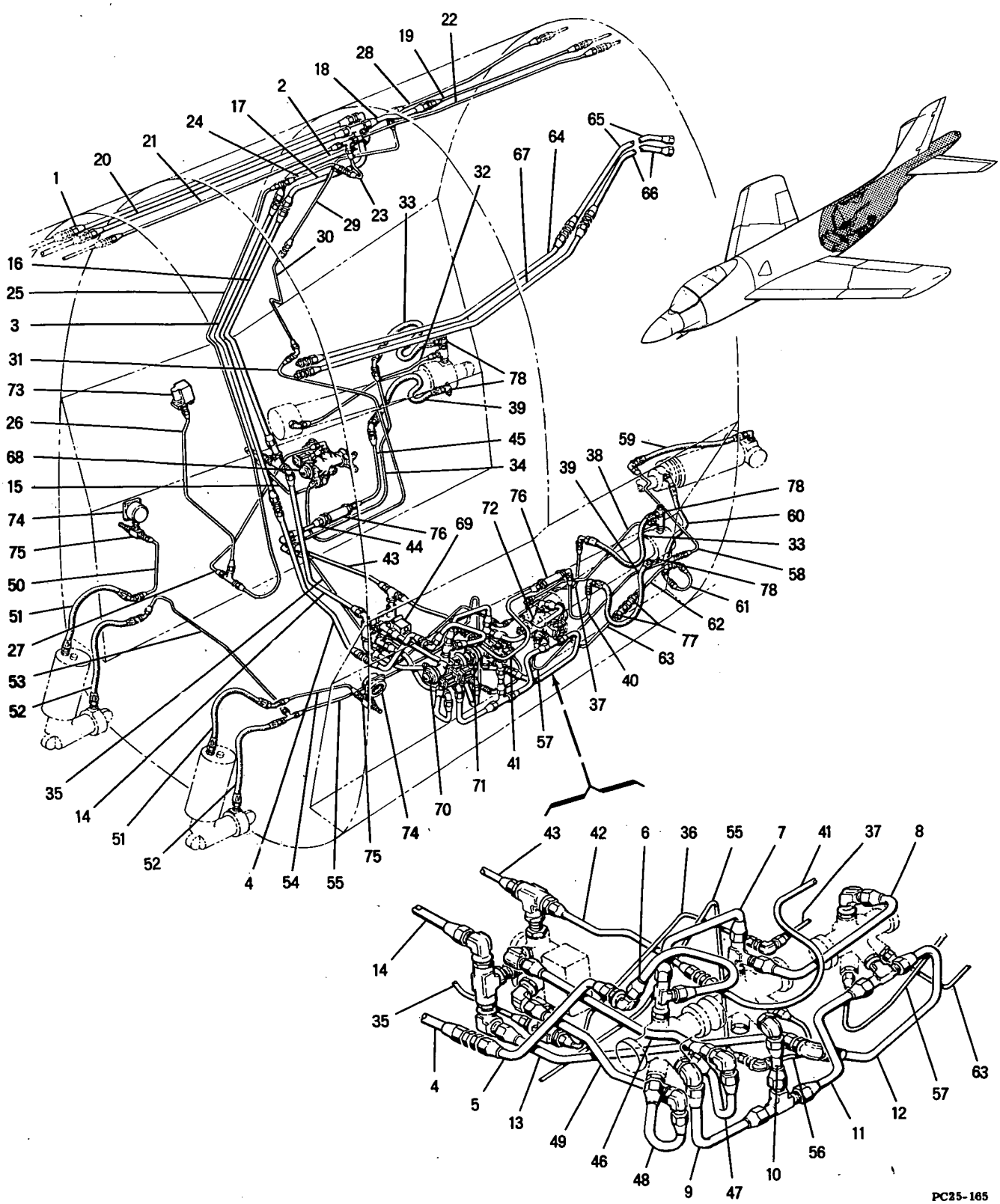

Figure 158 -- Aft Fuselage Hydraulic Installation (Fuselage Station 434.0 To Fuselage Station 498.0) (Sheet 1 of 2)

FIGURE & INDEX NUMBER	PART NUMBER	1 2 3 4 5 6 7 DESCRIPTION	UNITS PER ASS'Y	USABLE ON CODE
158 -	25-69003- 1	HYDRAULIC INSTL, AFT FUSELAGE, SEE FIG. 138-5 FOR NEXT HIGHER ASSEMBLY	REF	
- 1	25-69255- 55	• TUBE ASSEMBLY, UTILITY PRESSURE	1	
- 2	25-69207- 27	• TUBE ASSEMBLY, UTILITY PRESSURE	1	
- 3	25-69207- 25	• TUBE ASSEMBLY, UTILITY PRESSURE	1	
- 4	25-69207- 23	• TUBE ASSEMBLY, UTILITY PRESSURE	1	
- 5	25-69207- 21	• TUBE ASSEMBLY, UTILITY PRESSURE	1	
- 6	25-69168- 43	• TUBE ASSEMBLY, UTILITY PRESSURE	1	
- 7	25-69168- 45	• TUBE ASSEMBLY, UTILITY PRESSURE	1	
- 8	25-69168- 47	• TUBE ASSEMBLY, UTILITY PRESSURE	1	
- 9	25-69168- 87	• TUBE ASSEMBLY, UTILITY RETURN	1	
- 10	25-69168- 53	• TUBE ASSEMBLY, UTILITY RETURN	1	
- 11	25-69168- 51	• TUBE ASSEMBLY, UTILITY RETURN	1	
- 12	25-69168- 49	• TUBE ASSEMBLY, UTILITY RETURN	1	
- 13	25-69207- 19	• TUBE ASSEMBLY, UTILITY RETURN	1	
- 14	25-69207- 17	• TUBE ASSEMBLY, UTILITY RETURN	1	
- 15	25-69207- 11	• TUBE ASSEMBLY, UTILITY RETURN	1	
- 16	25-69207- 15	• TUBE ASSEMBLY, UTILITY RETURN	1	
- 17	25-69207- 13	• TUBE ASSEMBLY, UTILITY RETURN	1	
- 18	25-69207- 29	• TUBE ASSEMBLY, UTILITY RETURN	1	
- 19	25-69207- 59	• TUBE ASSEMBLY, UTILITY RETURN	1	
- 20	25-69255- 51	• TUBE ASSEMBLY, UTILITY RETURN	1	
- 21	25-69255- 59	• TUBE ASSEMBLY, UTILITY CONTROL PRESSURE	1	
- 22	25-69128- 11	• TUBE ASSEMBLY, UTILITY CONTROL PRESSURE	1	
- 23	25-69128- 19	• TUBE ASSEMBLY, UTILITY CONTROL PRESSURE	1	
- 24	25-69128- 15	• TUBE ASSEMBLY, UTILITY CONTROL PRESSURE	1	
- 25	25-69128- 23	• TUBE ASSEMBLY, UTILITY CONTROL PRESSURE	1	
- 26	25-69128- 87	• TUBE ASSEMBLY, UTILITY CONTROL PRESSURE	1	
- 27	25-69128- 89	• TUBE ASSEMBLY, UTILITY CONTROL PRESSURE	1	
- 28	25-69255- 73	• TUBE ASSEMBLY, RUDDER FEEL TRIM	1	
- 29	25-69255- 83	• TUBE ASSEMBLY, RUDDER FEEL TRIM	1	
- 30	25-69255- 79	• TUBE ASSEMBLY, RUDDER FEEL TRIM	1	
- 31	25-69168- 17	• TUBE ASSEMBLY, RUDDER FEEL TRIM	1	
- 32	25-69168- 29	• TUBE ASSEMBLY, SPEED BRAKE IN	1	
- 33	25-69195- 1	• HOSE ASSEMBLY, SPEED BRAKE IN	2	
	ER6292-4-11	• • HOSE ASSEMBLY (WH)	1	
- 34	25-69168- 23	• TUBE ASSEMBLY, SPEED BRAKE IN	1	
- 35	25-69168- 79	• TUBE ASSEMBLY, SPEED BRAKE IN	1	
- 36	25-69168- 83	• TUBE ASSEMBLY, SPEED BRAKE IN	1	
- 37	25-69255-101	• TUBE ASSEMBLY, SPEED BRAKE IN	1	
- 38	25-69168- 33	• TUBE ASSEMBLY, SPEED BRAKE IN	1	
- 39	25-69195- 3	• HOSE ASSEMBLY, SPEED BRAKE IN	2	
	ER6292-4-11	• • HOSE ASSEMBLY (WH)	1	
- 40	25-69255- 89	• TUBE ASSEMBLY, SPEED BRAKE OUT	1	
- 41	25-69255- 87	• TUBE ASSEMBLY, SPEED BRAKE OUT	1	
- 42	25-69168- 77	• TUBE ASSEMBLY, SPEED BRAKE OUT	1	
- 43	25-69168- 73	• TUBE ASSEMBLY, SPEED BRAKE OUT	1	
- 44	25-69255- 91	• TUBE ASSEMBLY, SPEED BRAKE OUT	1	
- 45	25-69255- 93	• TUBE ASSEMBLY, SPEED BRAKE OUT	1	
- 46	25-69168- 75	• TUBE ASSEMBLY, SPEED BRAKE OUT	1	
- 47	25-69168- 41	• TUBE ASSEMBLY, SPEED BRAKE OUT	1	
- 48	25-69168- 39	• TUBE ASSEMBLY, SPEED BRAKE IN	1	
- 49	25-69168- 81	• TUBE ASSEMBLY, SPEED BRAKE IN	1	
- 50	25-69168- 95	• TUBE ASSEMBLY, ARRESTING GEAR AIR PRESSURE	1	
- 51	25-69195-177	• HOSE ASSEMBLY, ARRESTING GEAR AIR PRESSURE	2	
	ER6292-4-16.50	• • HOSE ASSEMBLY (WH)	1	
- 52	25-69195-143	• HOSE ASSEMBLY, ARRESTING GEAR AIR PRESSURE	2	
	ER6292-4-13.25	• • HOSE ASSEMBLY (WH)	1	
- 53	25-69255- 97	• TUBE ASSEMBLY, ARRESTING GEAR PRESSURE	1	
- 54	25-69168- 93	• TUBE ASSEMBLY, ARRESTING GEAR AIR PRESSURE	1	
- 55	25-69255- 95	• TUBE ASSEMBLY, ARRESTING GEAR AIR PRESSURE	1	
- 56	25-69168- 55	• TUBE ASSEMBLY, ARRESTING GEAR PRESSURE	1	
- 57	25-69128- 97	• TUBE ASSEMBLY, TAIL SKID UP	1	
- 58	25-69168- 97	• TUBE ASSEMBLY, TAIL SKID UP	1	
- 59	25-69195-145	• HOSE ASSEMBLY, TAIL SKID UP	1	
	ER6292-4-12.25	• • HOSE ASSEMBLY (WH)	1	
- 60	25-69195-147	• HOSE ASSEMBLY, TAIL SKID DOWN	1	
	ER6292-4-14.25	• • HOSE ASSEMBLY (WH)	1	
- 61	25-69255-115	• TUBE ASSEMBLY, TAIL SKID DOWN	1	
- 62	25-69255- 77	• TUBE ASSEMBLY, TAIL SKID DOWN	1	
- 63	25-69128- 95	• TUBE ASSEMBLY, TAIL SKID DOWN	1	
- 64	25-69207- 31	• TUBE ASSEMBLY, POWER CONTROL PRESSURE	1	
- 65	25-69207- 33	• TUBE ASSEMBLY, POWER CONTROL PRESSURE	1	
- 66	25-69207- 47	• TUBE ASSEMBLY, POWER CONTROL RETURN	1	
- 67	25-69207- 45	• TUBE ASSEMBLY, POWER CONTROL RETURN	1	
- 68	AV14A1111A107	• VALVE, HYD SELECTOR SOLENOID RUDDER (GCO) MCDONNELL SPEC 25-69008-18	1	
		ATTACHING PARTS		
	AN4-5A	• BOLT	4	
	AN960D416	• WASHER	4	

¤----¤-¤-¤----¤

Aft Fuselage

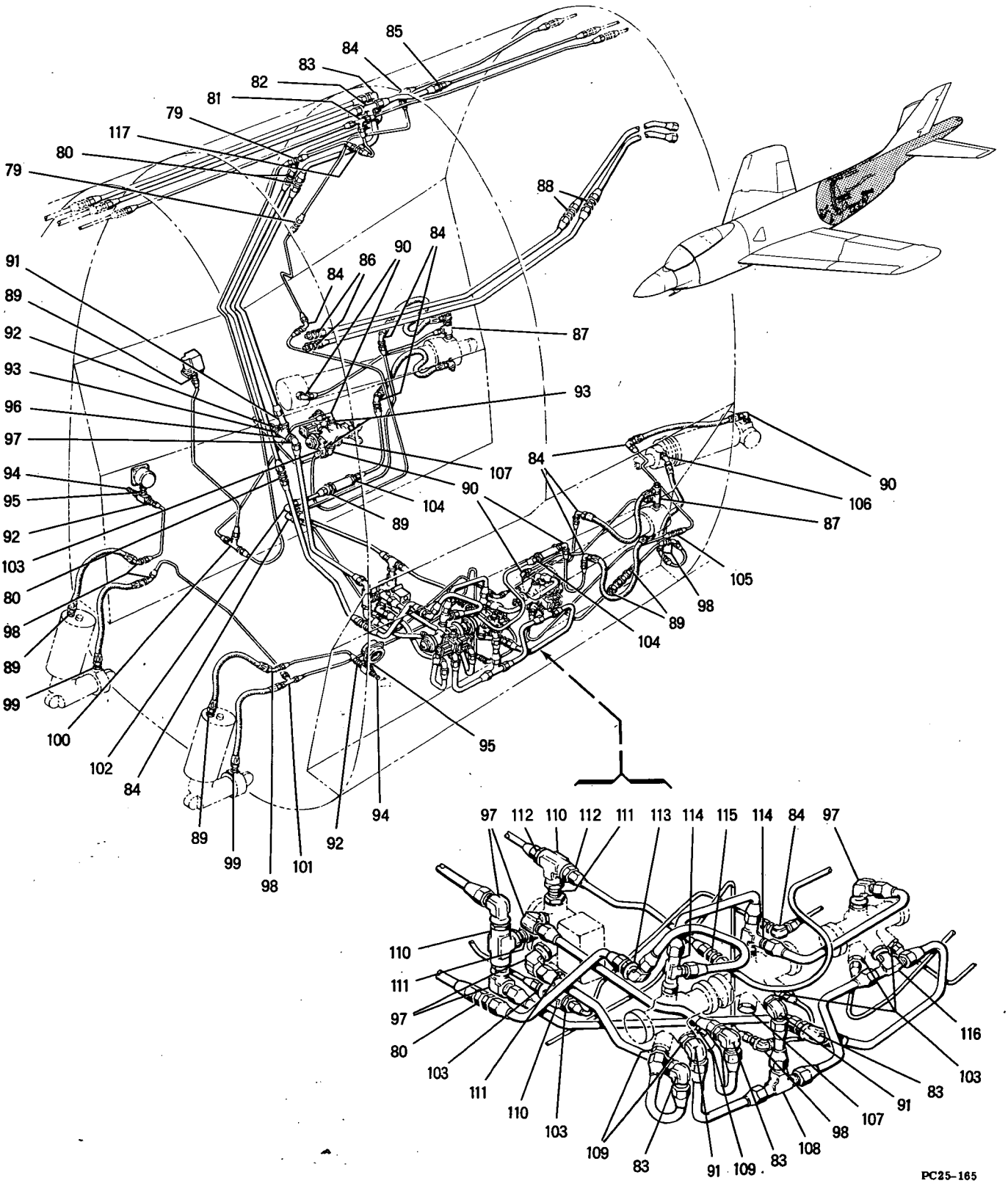

Figure 158 -- Aft Fuselage Hydraulic Installation (Fuselage Station 434.0 To Fuselage Station 498.0) (Sheet 2 of 2)

FIGURE & INDEX NUMBER	PART NUMBER	1 2 3 4 5 6 7 DESCRIPTION	UNITS PER ASS'Y	USABLE ON CODE
158 - 69	11520	• VALVE, SOLENOID BY-PASS (MVEM) MCDONNELL SPEC 25-69030-1	1	
		ATTACHING PARTS		
	AN3-16A	• BOLT	2	
	AN3-31A	• BOLT	2	
	NAS43DD3-52	• SPACER	2	
		¤----¤-¤-¤----¤		
- 70	AV14B1124A107	• VALVE, HYD SELECTOR SOLENOID SPEED BRAKE (GCO) MCDONNELL SPEC 25-69008-58	1	
		ATTACHING PARTS		
	AN4-6A	• BOLT	4	
	AN960D416	• WASHER	6	
		¤----¤-¤-¤----¤		
- 71	AV14A1111A107	• VALVE, HYD SELECTOR SOLENOID ARRESTING GEAR (GCO) MCDONNELL SPEC 25-69008-18	1	
		ATTACHING PARTS		
	AN4-6A	• BOLT	4	
	AN960D416	• WASHER	6	
		¤----¤-¤-¤----¤		
- 72	AV14A1111A107	• VALVE, HYD SELECTOR SOLENOID TAIL SKID (GCO) MCDONNELL SPEC 25-69008-18	1	
		ATTACHING PARTS		
	AN4-6A	• BOLT	4	
	AN960D416	• WASHER	6	
		¤----¤-¤-¤----¤		
- 73	AL58D1045A11	• SWITCH, HYDRAULIC PRESSURE (GCO) MCDONNELL SPEC 25-69031-7	1	
		ATTACHING PARTS		
	AN3-26A	• BOLT	2	
	AN960D10	• WASHER	2	
		¤----¤-¤-¤----¤		
- 74	AN5769-2A	• GAGE, HYDRAULIC PRESSURE	2	
	AN6290-4	• GASKET, USE WITH INDEX 74	2	
- 75	25-69260- 3	• MANIFOLD, AIR CHARGE	2	
- 76	43-100-45-10	• RESTRICTOR (GPPI)	2	
- 77	17-100-17-25	• RESTRICTOR (GPPI)	1	
- 78	7M7D4	• SWIVEL ASSEMBLY (MDA)	4	
	AN6290-4	• GASKET, USE WITH INDEX 78	4	
- 79	MS21902D4	• UNION	2	
- 80	MS21902D8	• UNION	4	
- 81	MS21909D6	• TEE	1	
	AN924-6D	• NUT, USE WITH INDEX 81	1	
	AN960D916	• WASHER, USE WITH INDEX 81	1	
- 82	MS21909D8	• TEE	1	
	AN924-8D	• NUT, USE WITH INDEX 82	1	
	AN960D1216	• WASHER, USE WITH INDEX 82	1	
- 83	MS21908D8	• ELBOW	4	
	AN924-8D	• NUT, USE WITH INDEX 83	4	
	AN960D1216	• WASHER, USE WITH INDEX 83	4	
- 84	MS21908D4	• ELBOW	9	
	AN924-4D	• NUT, USE WITH INDEX 84	9	
	AN960D716	• WASHER, USE WITH INDEX 84	9	
- 85	MS21916D8-6	• REDUCER	1	
- 86	MS21903D6	• UNION	2	
	AN924-6D	• NUT, USE WITH INDEX 86	2	
- 87	MS21911D4	• TEE	2	
	AN6289D4	• NUT, USE WITH INDEX 87	2	
	AN6291-8	• RING, BACK UP, USE WITH INDEX 87	2	
	AN6290-4	• GASKET, USE WITH INDEX 87	2	
- 88	MS21902D6	• UNION	2	
- 89	MS21902D4	• UNION	6	
	AN6290-4	• GASKET, USE WITH INDEX 89	6	
- 90	MS21908D4	• ELBOW	6	
	AN6289D4	• NUT, USE WITH INDEX 90	6	
	AN6291-4	• RING, BACK UP, USE WITH INDEX 90	6	
	AN6290-4	• GASKET, USE WITH INDEX 90	6	
- 91	MS21907D8	• ELBOW	3	
	AN6289D8	• NUT, USE WITH INDEX 91	3	
	AN6291-8	• RING, BACK UP, USE WITH INDEX 91	3	
	AN6290-8	• GASKET, USE WITH INDEX 91	3	
- 92	MS21903D4	• UNION	3	
	AN924-4D	• NUT, USE WITH INDEX 92	3	
	AN6290-4	• GASKET, USE WITH INDEX 92	3	
- 93	AN893-3D	• BUSHING	3	
	AN6290-8	• GASKET, USE WITH INDEX 93	3	

FIGURE & INDEX NUMBER	PART NUMBER	1 2 3 4 5 6 7	DESCRIPTION	UNITS PER ASS'Y	USABLE ON CODE
158 - 94	AN6287-1	•	VALVE, HIGH PRESSURE AIR	2	
- 95	MS21903D4	•	UNION	2	
	AN6289D4	•	NUT, USE WITH INDEX 95	2	
	AN6291-4	•	RING, BACK UP, USE WITH INDEX 95	2	
	AN6290-4	•	GASKET, USE WITH INDEX 95	2	
- 96	AN938D8	•	TEE	1	
- 97	MS21908D8	•	ELBOW	6	
	AN6289D8	•	NUT, USE WITH INDEX 97	6	
	AN6291-8	•	RING, BACK UP, USE WITH INDEX 97	6	
	AN6290-8	•	GASKET, USE WITH INDEX 97	6	
- 98	MS21907D4	•	ELBOW	6	
	AN924-4D	•	NUT, USE WITH INDEX 98	6	
	AN960D716	•	WASHER, USE WITH INDEX 98	6	
- 99	MS21916D5-4	•	REDUCER	2	
	AN6290-5	•	GASKET, USE WITH INDEX 99	2	
-100	MS21912D4	•	TEE	1	
	AN924-4D	•	NUT, USE WITH INDEX 100	1	
	AN960D716	•	WASHER, USE WITH INDEX 100	1	
-101	MS21912D4	•	TEE	1	
	AN924-4D	•	NUT, USE WITH INDEX 101	1	
	AN960D716	•	WASHER, USE WITH INDEX 101	1	
-102	MS21908D5	•	ELBOW	1	
	AN924-5D	•	NUT, USE WITH INDEX 102	1	
	AN960D816	•	WASHER, USE WITH INDEX 102	1	
-103	MS21916D8-4	•	REDUCER	6	
	AN6290-8	•	GASKET, USE WITH INDEX 103	6	
-104	MS21916D5-4	•	REDUCER	2	
	AN6290-4	•	GASKET, USE WITH INDEX 104	2	
-105	MS21903D4	•	UNION	1	
	AN924-4D	•	NUT, USE WITH INDEX 105	1	
-106	MS21907D4	•	ELBOW	1	
	AN6289D4	•	NUT, USE WITH INDEX 106	1	
	AN6291-4	•	RING, BACK UP, USE WITH INDEX 106	1	
	AN6290-4	•	GASKET, USE WITH INDEX 106	1	
-107	AN814-8D	•	PLUG	2	
	AN6290-8	•	GASKET, USE WITH INDEX 107	2	
-108	MS21905D8	•	TEE	1	
-109	MS21902D8	•	UNION	2	
	AN6290-8	•	GASKET, USE WITH INDEX 109	2	
-110	AN938D8	•	TEE	3	
	AN6289D8	•	NUT, USE WITH INDEX 110	3	
	AN6291-8	•	RING, BACK UP, USE WITH INDEX 110	3	
	AN6290-8	•	GASKET, USE WITH INDEX 110	3	
-111	MS21903D8	•	UNION	3	
	AN6290-8	•	GASKET, USE WITH INDEX 111	3	
-112	MS21916D8-5	•	REDUCER	2	
	AN6290-8	•	GASKET, USE WITH INDEX 112	2	
-113	MS21907D8	•	ELBOW	1	
	AN924-8D	•	NUT, USE WITH INDEX 113	1	
	AN960D1216	•	WASHER, USE WITH INDEX 113	1	
-114	MS21912D8	•	TEE	2	
	AN6289D8	•	NUT, USE WITH INDEX 114	2	
	AN6291-8	•	RING, BACK UP, USE WITH INDEX 114	2	
	AN6290-8	•	GASKET, USE WITH INDEX 114	2	
-115	MS21903D5	•	UNION	1	
	AN924-5D	•	NUT, USE WITH INDEX 115	1	
	AN960D816	•	WASHER, USE WITH INDEX 115	1	
-116	MS21909D8	•	TEE	1	
	AN6289D8	•	NUT, USE WITH INDEX 116	1	
	AN6291-8	•	RING, BACK UP, USE WITH INDEX 116	1	
	AN6290-8	•	GASKET, USE WITH INDEX 116	1	
-117	MS21916D6-4	•	REDUCER	1	

FIGURE & INDEX NUMBER	PART NUMBER	1 2 3 4 5 6 7 DESCRIPTION	UNITS PER ASS'Y	USABLE ON CODE
159 -	25-69003- 1	HYDRAULIC INSTALLATION, AFT FUSELAGE, SEE FIG. 138-5 FOR NEXT HIGHER ASSEMBLY	REF	
- 1	MS21903D6	• UNION	14	
	AN924-6D	• NUT, USE WITH INDEX 1	14	
- 2	25-69128- 29	• TUBE ASSEMBLY, UTIL&TY CONTROL PRESSURE	1	
- 3	25-69207- 89	• TUBE ASSEMBLY, UTILITY CONTROL PRESSURE	1	
- 4	25-69207- 91	• TUBE ASSEMBLY, UTILITY CONTROL PRESSURE	1	
- 5	25-69128- 53	• TUBE ASSEMBLY, UTILITY CONTROL PRESSURE	1	
- 6	MS21903D6	• UNION	1	
	AN924-6D	• NUT, USE WITH INDEX 6	1	
	AN960D916	• WASHER, USE WITH INDEX 6	1	
- 7	25-69207- 9	• TUBE ASSEMBLY, UTILITY CONTROL PRESSURE	1	
- 8	MS21902D6	• UNION	2	
	AN6290-6	• GASKET, USE WITH INDEX 8	2	
- 9	25-69128- 99	• TUBE ASSEMBLY, UTILITY PRESSURE	1	
- 10	MS21907D4	• ELBOW	2	
	AN924-4D	• NUT, USE WITH INDEX 10	2	
	AN960D716	• WASHER, USE WITH INDEX 10	2	
- 11	MS21908D4	• ELBOW	4	
	AN6289D4	• NUT, USE WITH INDEX 11	4	
	AN6291-4	• RING, BACK UP, USE WITH INDEX 11	4	
	AN6290-4	• GASKET, USE WITH INDEX 11	4	
- 12	AN893-2D	• BUSHING	2	
	AN6290-6	• GASKET, USE WITH INDEX 12	2	
- 13	MS28720-6	• FILTER, HYDRAULIC	2	
		ATTACHING PARTS		
	AN4-23A	• BOLT	4	
	AN960D416	• WASHER	4	
	NAS43DD4-32	• SPACER	4	
		¤----¤-¤-¤----¤		
- 14	MS21910D6	• TEE	1	
	AN924-6D	• NUT, USE WITH INDEX 14	1	
- 15	MS21916D6-4	• REDUCER	3	
	AN6290-6	• GASKET, USE WITH INDEX 15	3	
- 16	25-69207- 93	• TUBE ASSEMBLY, RUDDER PRESSURE	1	
- 17	25-69207- 95	• TUBE ASSEMBLY, RUDDER PRESSURE	1	
- 18	MS21903D4	• UNION	4	
	AN924-4D	• NUT, USE WITH INDEX 18	4	
- 19	AN939D4	• ELBOW	1	
	AN6290-4	• GASKET, USE WITH INDEX 19	2	
- 20	7M7D4	• SWIVEL ASSEMBLY, HYDRAULIC (MDA)	1	
- 21	25-69195-175	• HOSE ASSEMBLY, POWER CONTROL PRESSURE	1	
	ER6292-4-16.50	• • HOSE ASSEMBLY (WH)	1	
- 22	MS21902D4	• UNION	1	
	AN6290-4	• GASKET, USE WITH INDEX 22	1	
- 23	MS28720-4	• FILTER, HYDRAULIC	1	
		ATTACHING PARTS		
	AN4-17A	• BOLT	2	
	AN960D416	• WASHER	10	
		¤----¤-¤-¤----¤		
- 24	25-69195-179	• HOSE ASSEMBLY, UTILITY RETURN	1	
	ER6292-4-18	• • HOSE ASSEMBLY (WH)	1	
- 25	MS21907D4	• ELBOW	2	
	AN924-4D	• NUT, USE WITH INDEX 25	2	
	AN960D716	• WASHER, USE WITH INDEX 25	2	
- 26	25-69207- 5	• TUBE ASSEMBLY, UTILITY RETURN	1	
- 27	25-69207- 7	• TUBE ASSEMBLY, UTILITY RETURN	1	
- 28	AN938D6	• TEE	1	
- 29	25-69207- 3	• TUBE ASSEMBLY, UTILITY RETURN	1	
- 30	25-69207-101	• TUBE ASSEMBLY, UTILITY RETURN	1	
- 31	25-69207- 99	• TUBE ASSEMBLY, UTILITY RETURN	1	
- 32	25-69207- 97	• TUBE ASSEMBLY, UTILITY RETURN	1	
- 33	25-69207- 61	• TUBE ASSEMBLY, UTILITY RETURN	1	
- 34	25-69168- 85	• TUBE ASSEMBLY, RUDDER FEEL TRIM	1	
- 35	25-69207- 85	• TUBE ASSEMBLY, RUDDER FEEL TRIM	1	
- 36	25-69207- 87	• TUBE ASSEMBLY, RUDDER FEEL TRIM	1	
- 37	MS21908D4	• ELBOW	1	
	AN924-4D	• NUT, USE WITH INDEX 37	1	
	AN960D716	• WASHER, USE WITH INDEX 37	1	
- 38	25-69207-113	• TUBE ASSEMBLY, RUDDER FEEL TRIM	1	
- 39	MS21902D6	• UNION	4	
- 40	25-69207- 35	• TUBE ASSEMBLY, POWER CONTROL PRESSURE	1	
- 41	25-69207-103	• TUBE ASSEMBLY, POWER CONTROL PRESSURE	1	
- 42	25-69207-105	• TUBE ASSEMBLY, POWER CONTROL PRESSURE	1	
- 43	25-69207- 39	• TUBE ASSEMBLY, POWER CONTROL PRESSURE	1	
- 44	25-69207- 73	• TUBE ASSEMBLY, POWER CONTROL PRESSURE	1	
- 45	MS21908D6	• ELBOW	1	

Aft Fuselage

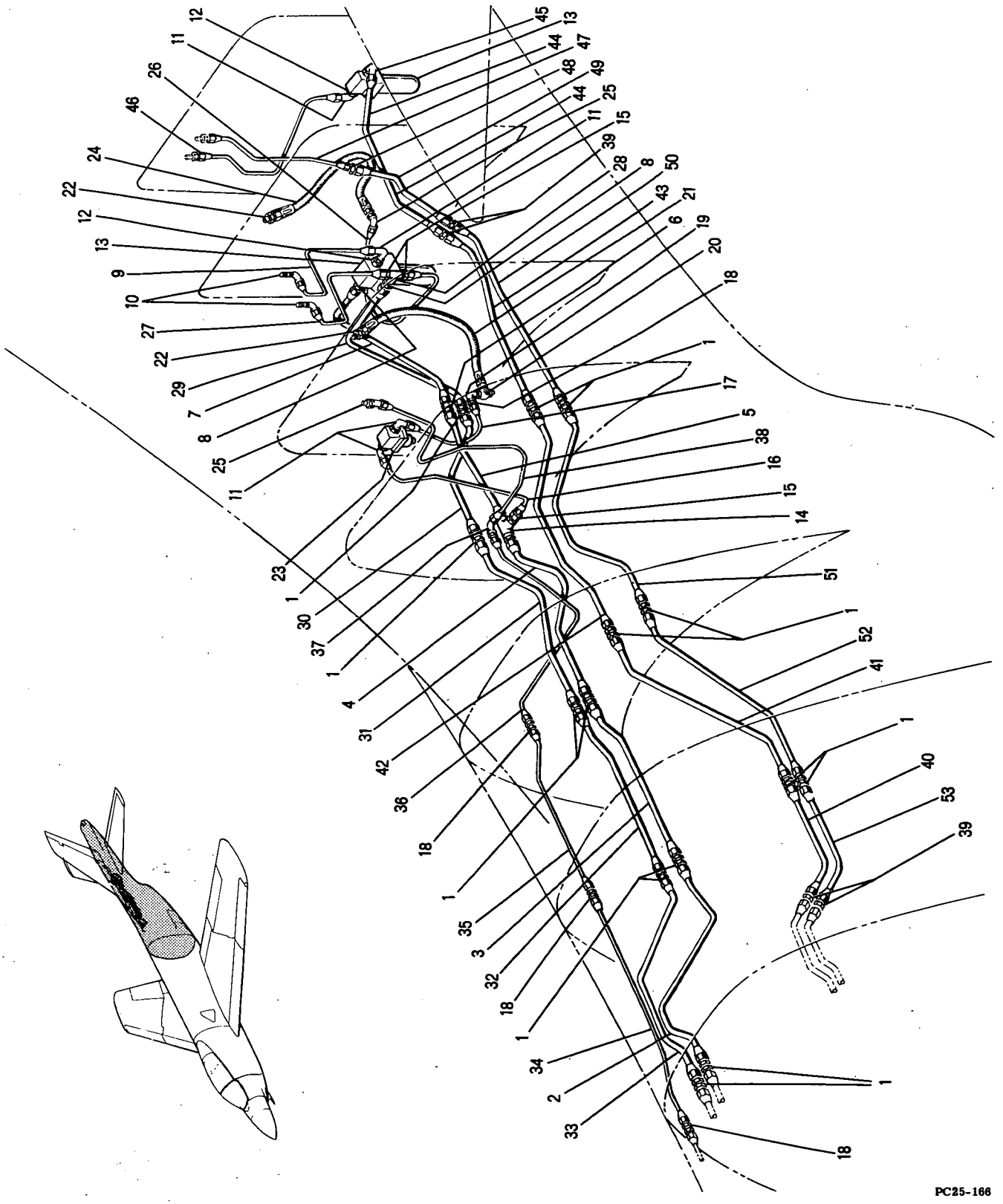

Figure 159 -- Aft Fuselage Hydraulic Installation (Aft of Fuselage Station 498.0)

FIGURE & INDEX NUMBER	PART NUMBER	1 2 3 4 5 6 7 DESCRIPTION	UNITS PER ASS'Y	USABLE ON CODE
159 -	AN6289D6	• NUT, USE WITH INDEX 45	1	
	AN6291-6	• RING, BACK UP, USE WITH INDEX 45	1	
	AN6290-6	• GASKET, USE WITH INDEX 45	1	
- 46	25-69207- 75	• TUBE ASSEMBLY, POWER CONTROL PRESSURE	1	
- 47	25-69207- 57	• TUBE ASSEMBLY, POWER CONTROL RETURN	1	
- 48	MS21916D6-4	• REDUCER	1	
- 49	25-69207- 55	• TUBE ASSEMBLY, POWER CONTROL RETURN	1	
- 50	25-69207-111	• TUBE ASSEMBLY, POWER CONTROL RETURN	1	
- 51	25-69207-109	• TUBE ASSEMBLY, POWER CONTROL RETURN	1	
- 52	25-69207-107	• TUBE ASSEMBLY, POWER CONTROL RETURN	1	
- 53	25-69207- 49	• TUBE ASSEMBLY, POWER CONTROL RETURN	1	

Aft Fuselage

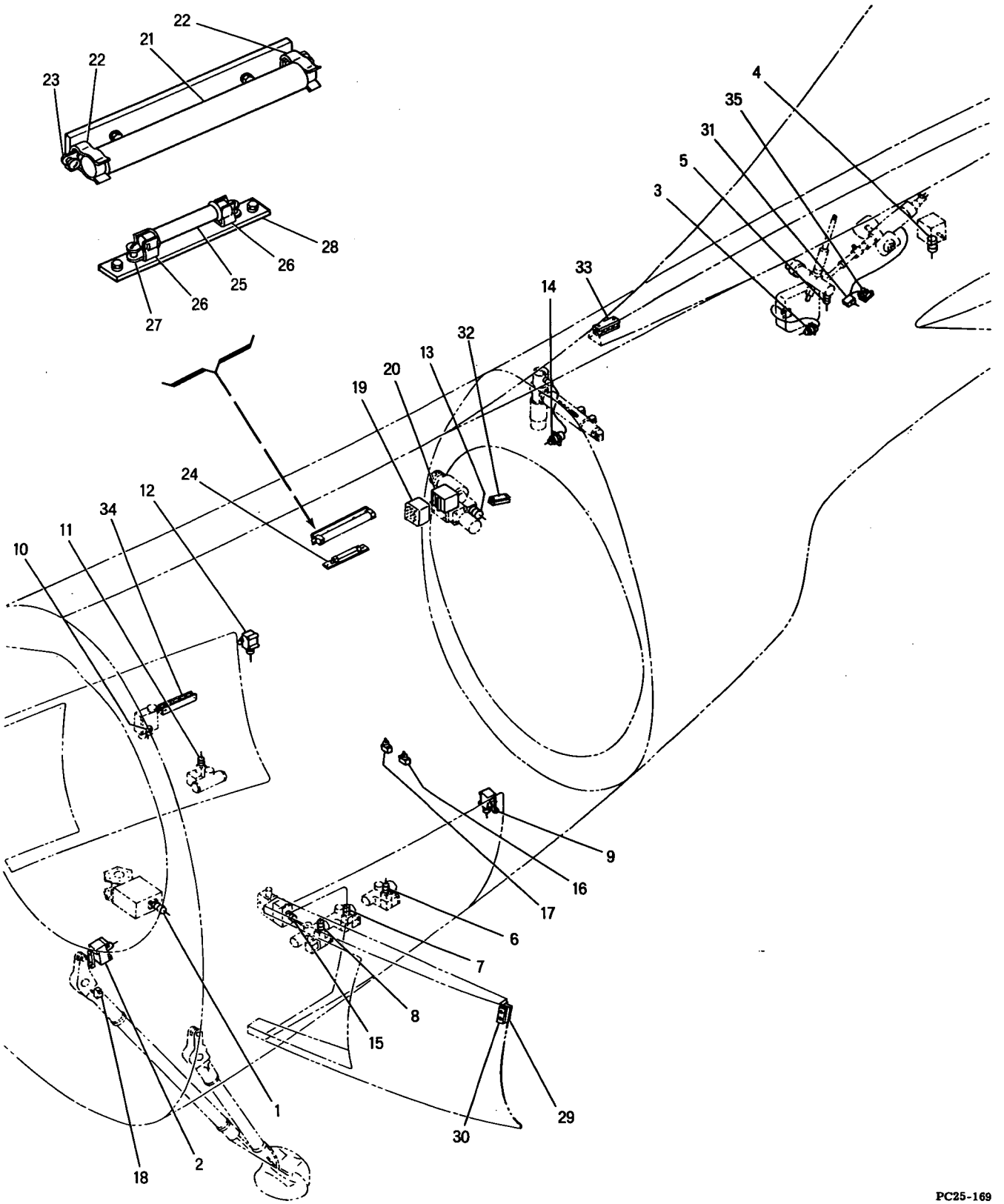

Figure 160 -- Aft Fuselage Wiring Installation

FIGURE & INDEX NUMBER	PART NUMBER	1 2 3 4 5 6 7 DESCRIPTION	UNITS PER ASS'Y	USABLE ON CODE
160 -	25-78000-301	WIRING INSTALLATION, AFT FUSELAGE, SEE FIG. 138-2 FOR NEXT HIGHER ASSEMBLY	REF	
	25-79000- 10	• BUNDLE ASSEMBLY, WIRE	1	
- 1	3106BS14S7S	• • PLUG (CED) FUEL VENT VALVE, USE WITH MS29513-14 O RING	1	
	25-79000- 74	• BUNDLE ASSEMBLY, WIRE	1	
- 2	HS5	• • SWITCH (EXS) ARRESTING HOOK LIMIT	1	
	25-79000-C76	• BUNDLE ASSEMBLY, WIRE	1	
- 3	AN3100-22-14S	• • RECEPTACLE, RUDDER SERVO	1	
- 4	3106BS14S2S	• • PLUG (CED) RUDDER POSITION TRANSMITTER, USE WITH MS29513-14 O RING	1	
- 5	3106BS10SL3S	• • PLUG (CED) RUDDER FEEL TRIM ACTUATOR, USE WITH MS29513-12 O RING	1	
	25-79000-B82	• BUNDLE ASSEMBLY, WIRE	1	
- 6	3106BS10SL4S	• • PLUG (CED) TAIL SKID VALVE, USE WITH MS29513-12 O RING	1	
- 7	3106BS10SL4S	• • PLUG (CED) ARRESTING GEAR VALVE, USE WITH MS29513-12 O RING	1	
- 8	3106BS10SL3S	• • PLUG (CED) SPEED BRAKE VALVE, USE WITH MS29513-12 O RING	1	
- 9	H203G	• • SWITCH (EXS) LH SPEED BRAKE LIMIT	1	
	25-79000-A84	• BUNDLE ASSEMBLY, WIRE	1	
- 10	3106BS10SL3S	• • PLUG (CED) HYDRAULIC PRESSURE SWITCH, USE WITH MS29513-12 O RING	1	
- 11	3106BS10SL4S	• • PLUG (CED) RUDDER FEEL TRIM VALVE, USE WITH MS29513-12 O RING	1	
- 12	H203G	• • SWITCH (EXS) RH SPEED BRAKE LIMIT	1	
	25-79000-C96	• BUNDLE ASSEMBLY, WIRE	1	
- 13	3106BS22-14S	• • PLUG (CED) STABILATOR SERVO, USE WITH MS29513-22 O RING	1	
- 14	AN3100-22-19S	• • RECEPTACLE, STABILATOR FEEL TRIM ACTUATOR & DAMPER	1	
	25-79000-229	• BUNDLE ASSEMBLY, WIRE	1	
- 15	3106BS10SL3S	• • PLUG (CED) HYDRAULIC BY-PASS VALVE, USE WITH MS29513-12 O RING	1	
- 16	AN3027-3	• SWITCH, LH SPEED BRAKE SAFETY	1	
- 17	AN3027-3	• SWITCH, RH SPEED BRAKE SAFETY	1	
- 18	AN3021-2	• SWITCH, ARRESTING HOOK SAFETY	1	
- 19	AN3310-1	• RELAY, STABILATOR FEEL TRIM TRANSFER	1	A
	AN3312-1	• RELAY, STABILATOR TRIM TRANSFER	1	B-F
- 20	AN3312-1	• RELAY, ELEVATOR FEEL TRIM REVERSING	1	
- 21	RW11G5R6	• RESISTOR	1	
	19-78193- 1	• BASE ASSEMBLY, RESISTOR MOUNTING	1	
- 22	15-78085- 3	• • CLIP, RESISTOR	2	
- 23	143002	• • TERMINAL (LTF)	2	
- 24	25-78051- 1	• RESISTOR ASSEMBLY, ELEVATOR FEEL TRIM	1	
- 25	RW15G2R0	• • RESISTOR	1	
- 26	127001	• • CLIP (LTF)	2	
		ATTACHING PARTS		
	AN515-8R5	• • SCREW	2	
	AN960A8L	• • WASHER	2	
		¤----¤-¤-¤----¤		
- 27	143001	• • TERMINAL (LTF)	2	
- 28	25-78052- 3	• • BLOCK, STABILATOR FEEL TRIM RESISTOR MOUNT	1	
- 29	25-78053- 3	• BLOCK, SPEED BRAKE LIMIT SWITCH MOUNTING	2	
		ATTACHING PARTS		
	AN509-10R22	• SCREW	4	
	AN960D10	• WASHER	4	
	AN364-1032	• NUT	4	
		¤----¤-¤-¤----¤		
- 30	25-78054- 3	• SHIM, SPEED BRAKE LIMIT SWITCH MOUNTING	2	
- 31	C4391-7-15	• THERMOSTAT (SPTD)	1	
		ATTACHING PARTS		
	NAS229-8	• SCREW	2	
		¤----¤-¤-¤----¤		
- 32	5M7-10-2	• PANEL ASSEMBLY, ELECTRICAL CONNECTOR (MDA)	1	
	5M8-10-2	• COVER, PANEL ASSEMBLY (MDA) USE WITH INDEX 32	1	
- 33	5M7-10-4	• PANEL ASSEMBLY, ELECTRICAL CONNECTOR, (MDA)	1	
	5M8-10-4	• COVER, PANEL ASSEMBLY (MDA) USE WITH INDEX 33	1	
- 34	5M7-10-6	• PANEL ASSEMBLY, ELECTRICAL CONNECTOR, (MDA)	1	
	5M8-10-6	• COVER, PANEL ASSEMBLY (MDA) USE WITH INDEX 34	1	
- 35	AN3436-4-1	• BLOCK ASSY, TERMINAL	1	
	NAS42-4-24	• SPACER, USE WITH INDEX 35	2	
	25-79000-A130	• BUNDLE ASSEMBLY, WIRE	1	
	25-79000-B223	• BUNDLE ASSEMBLY, WIRE	1	

Aft Fuselage

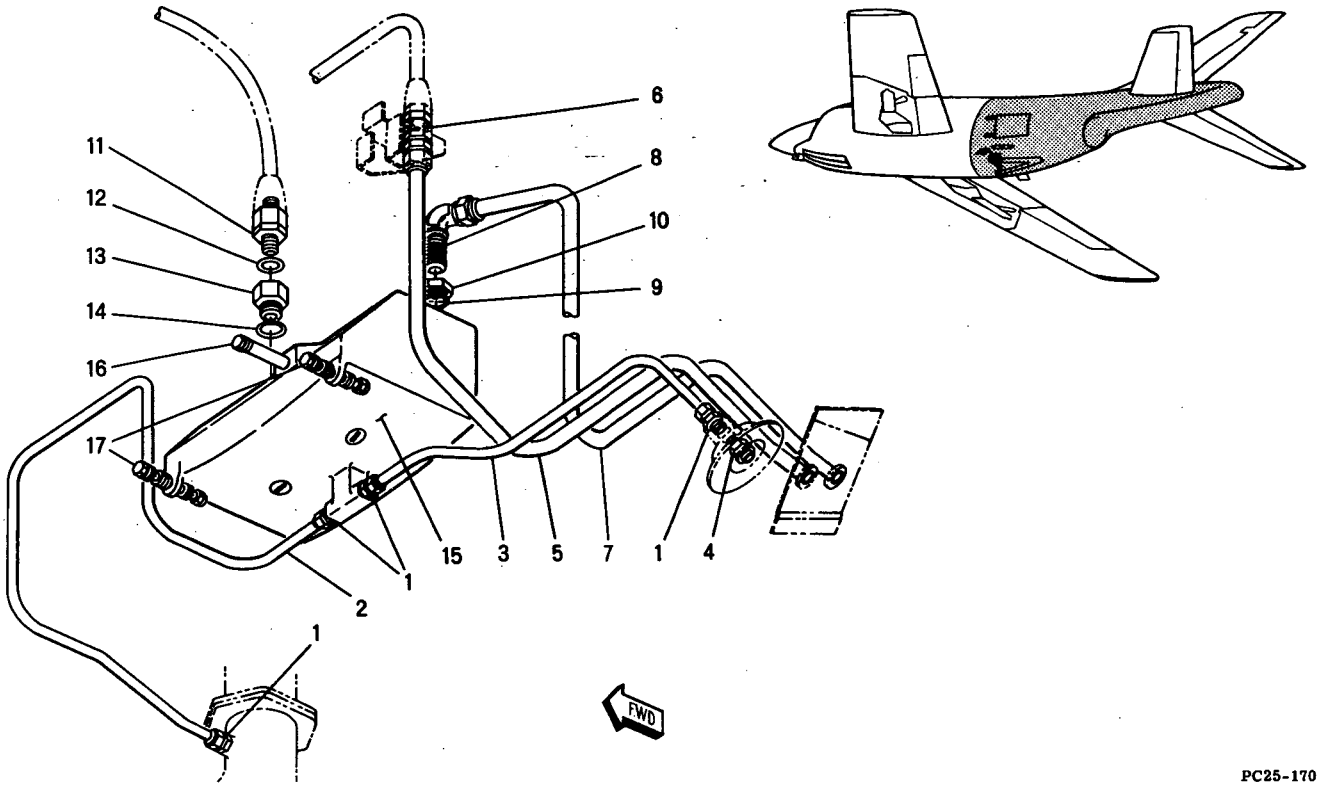

Figure 161 - Fuel Dump Tank Installation

FIGURE & INDEX NUMBER	PART NUMBER	1 2 3 4 5 6 7 DESCRIPTION	UNITS PER ASS'Y	USABLE ON CODE
161 -	25-58012- 1	TANK INSTALLATION, FUEL DUMP, SEE FIG. 138-6 FOR NEXT HIGHER ASSY	REF	A-B
- 1	AN815-4D	• UNION	4	
	MS29512-4	• GASKET, USE WITH INDEX 1	4	
- 2	25-58180- 5	• TUBE ASSY, DUMP TANK VENT	1	A-B
- 3	25-58180- 3	• TUBE ASSY, DUMP TANK DRAIN	1	A-B
- 4	230-20274	• VALVE (WH) ALTERNATE CCA4300 (CTAD)	1	
	MS29512-4	• GASKET, USE WITH INDEX 4	1	
- 5	25-58180- 9	• TUBE ASSY, COMBUSTION CHAMBER DRAIN	1	
- 6	1002-8	• NIPPLE (RYY)	1	
	AN924-8D	• NUT, USE WITH INDEX 6	1	
- 7	25-58180- 7	• TUBE ASSY, DUMP TANK VENT	1	A-B
- 8	AN833-8D	• ELBOW	1	
- 9	MS29512-8	• GASKET	1	
- 10	AN924-8D	• NUT	1	
- 11	1012-5	• NIPPLE (RYY)	1	A-B
- 12	MS29512-5	• GASKET	1	
- 13	AN893-8D	• BUSHING	1	
- 14	MS29512-8	• GASKET	1	
- 15	25-58160- 5	• TANK, FUEL DUMP	1	A-B
		ATTACHING PARTS		
- 16	AN3-26A	• BOLT	1	
	AN960D10L	• WASHER	1	
	NAS43-3-118	• SPACER	1	
	AN960D10	• WASHER	2	
	AN365-1032	• NUT	1	
- 17	AN3-10A	• BOLT	2	
	AN960D10L	• WASHER	2	
	AN960D10	• WASHER	10	
	AN365-1032	• NUT	1	
		¤----¤-¤-¤----¤		

Aft Fuselage

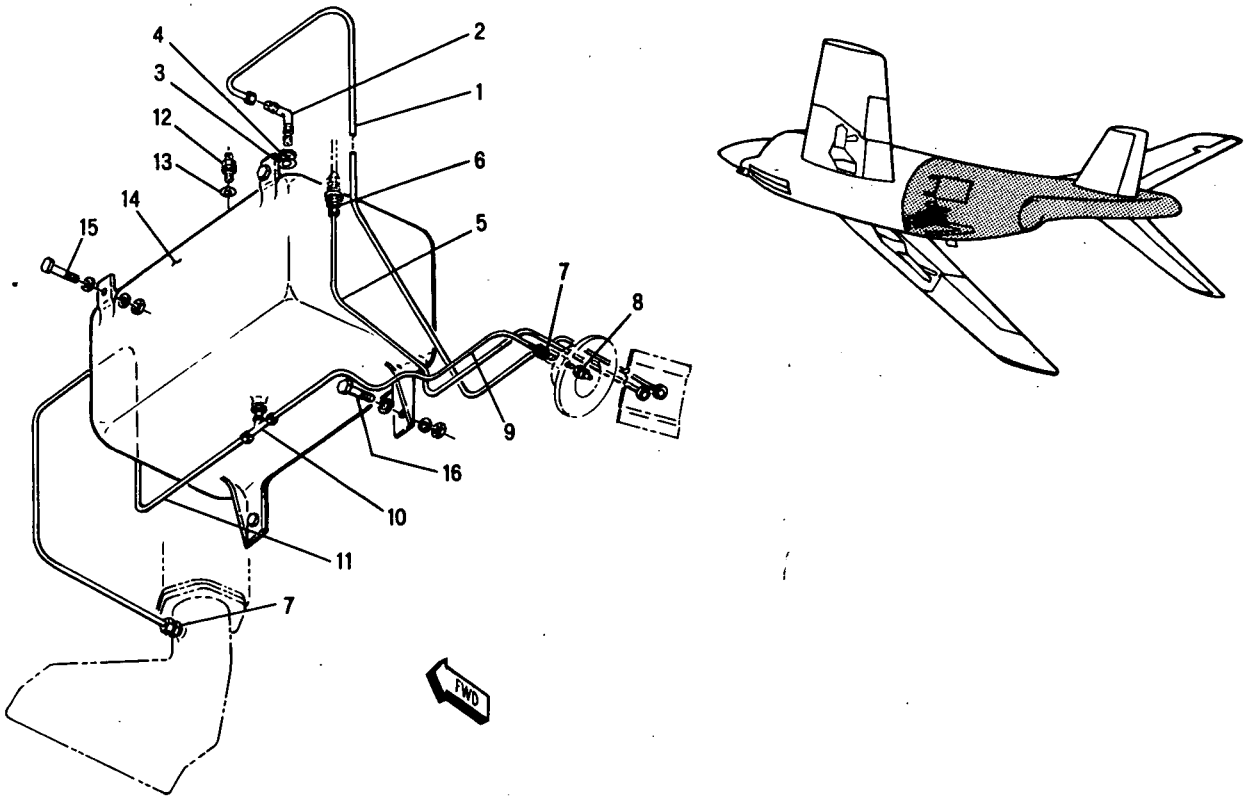

PC25-170A

Figure 162 -- Fuel Dump Tank Installation

FIGURE & INDEX NUMBER	PART NUMBER	1 2 3 4 5 6 7 DESCRIPTION	UNITS PER ASS'Y	USABLE ON CODE
162 -	25-58238- 1	TANK INSTALLATION, FUEL DUMP, SEE FIG. 138-6 FOR NEXT HIGHER ASSY	REF	C-F
- 1	25-58180- 15	• TUBE ASSY, DUMP TANK VENT	1	C-F
- 2	AN833-8D	• ELBOW	1	
- 3	MS29512-8	• GASKET	1	
- 4	AN924-8D	• NUT	1	
- 5	25-58180- 9	• TUBE ASSY, COMBUSTION CHAMBER DRAIN	1	
- 6	1002-8	• NIPPLE (RYY)	1	
	AN924-8D	• NUT, USE WITH INDEX 6	1	
- 7	AN815-4D	• UNION	2	
	MS29512-4	• GASKET, USE WITH INDEX 7	2	
- 8	230-20274	• VALVE (WH)	1	
	MS29512-4	• GASKET, USE WITH INDEX 8	1	
- 9	25-58180- 11	• TUBE ASSY, DUMP TANK DRAIN	1	C-F
- 10	AN834-4D	• TEE	1	
	MS29512-4	• GASKET, USE WITH INDEX 10	1	
	AN924-4D	• NUT, USE WITH INDEX 10	1	
- 11	25-58180- 13	• TUBE ASSY, DUMP TANK VENT	1	C-F
- 12	1012-8	• NIPPLE (RYY)	1	C-F
- 13	MS29512-8	• GASKET	1	
- 14	25-58236- 3	• TANK, FUEL DUMP	1	C-F
		ATTACHING PARTS		
- 15	AN4-10A	• BOLT	2	
	AN960D416	• WASHER	4	
	AN365-428	• NUT	2	
- 16	AN3-6A	• BOLT	2	
	AN960D10	• WASHER	4	
	AN365-1032	• NUT	2	
		¤----¤-¤-¤----¤		

Aft Fuselage

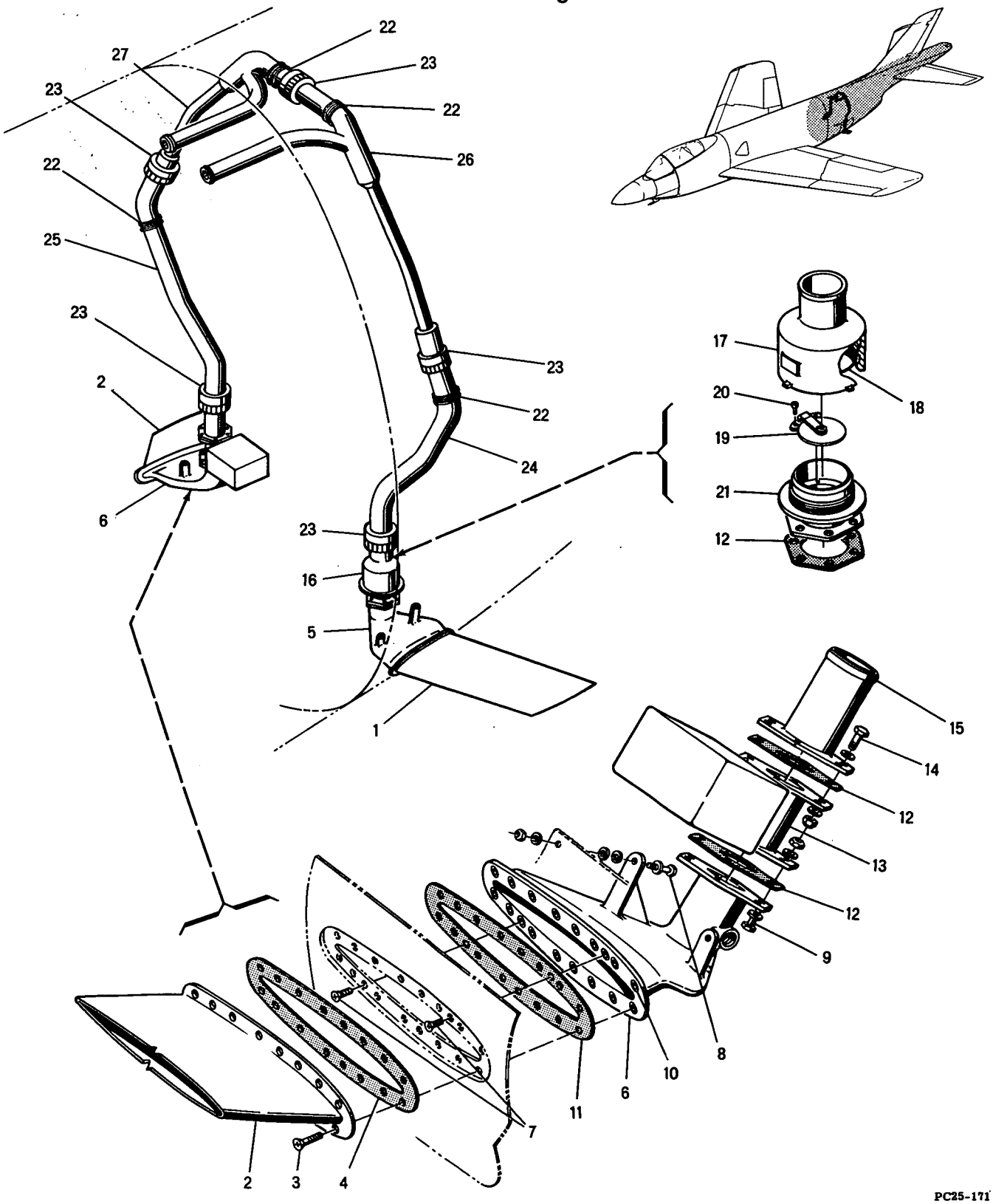

Figure 163 -- Aft Fuselage Fuel Vent System Installation

FIGURE & INDEX NUMBER	PART NUMBER	1 2 3 4 5 6 7 DESCRIPTION	UNITS PER ASS'Y	USABLE ON CODE
163 -	25-58011- 3	SYSTEM INSTALLATION, AFT FUSELAGE FUEL VENT, SEE FIG. 138-14 FOR NEXT HIGHER ASSEMBLY	REF	
- 1	25-58142- 17	• MAST ASSEMBLY, FUEL VENT OVERBOARD, LEFT SIDE	1	
- 2	25-58142- 19	• MAST ASSEMBLY, FUEL VENT OVERBOARD, RIGHT SIDE	1	
		ATTACHING PARTS		
- 3	AN509-10R11	• SCREW	32	
		¤----¤-¤-¤----¤		
- 4	25-58163- 3	• GASKET, FUSELAGE FUEL VENT MAST	2	
- 5	25-58177- 1	• HOUSING ASSY, FUSELAGE FUEL VENT OUTLET LH	1	
- 6	25-58177- 2	• HOUSING ASSY, FUSELAGE FUEL VENT OUTLET RH	1	
		ATTACHING PARTS		
- 7	AN509-10R8	• SCREW	4	
- 8	AN3-7A	• BOLT	4	
	AN960D10L	• WASHER	4	
	AN960D10	• WASHER	12	
	AN364-1032	• NUT	4	
- 9	AN5-10A	• BOLT	12	
	AN960D516	• WASHER	24	
	AN364-524	• NUT	12	
		¤----¤-¤-¤----¤		
- 10	RD205SB7L	• • INSERT (ROSN)	18	
	RL23SB7	• • RING, LOCK (ROSN) USE WITH INDEX 10	18	
- 11	25-58163- 3	• GASKET, FUSELAGE FUEL VENT MAST	2	
- 12	25-58076- 59	• GASKET, FUEL SYSTEM	3	
- 13	138-01-000	• VALVE, FUS FUEL TANK PRESSURE REGULATOR (SELB) MCDONNELL SPEC 25-58081-1	1	
		ATTACHING PARTS		
- 14	AN5-10A	• BOLT	6	
	AN960D516	• WASHER	12	
	AN364-524	• NUT	6	
		¤----¤-¤-¤----¤		
- 15	25-58165- 1	• VALVE ASSY, FUSELAGE FUEL VENT BUTTERFLY WELD	1	
- 16	25-58157- 3	• VALVE ASSY, FUSELAGE FUEL VENT CHECK	1	
- 17	25-58155- 3	• • HOUSING, FUSELAGE FUEL VENT CHECK VALVE	1	
- 18	MS29513-346	• • PACKING, O RING	1	
- 19	1111-518117	• • CHECK (PA) FUSELAGE FUEL VENT SWING	1	
		ATTACHING PARTS		
- 20	AN500A6-4	• • SCREW	2	
		¤----¤-¤-¤----¤		
- 21	25-58156- 5	• • FITTING, FUSELAGE FUEL VENT CHECK VALVE	1	
- 22	AN742D42CB	• CLAMP	4	
- 23	C09A020	• CONNECTOR (FLRE)	5	
	C09A306	• SEAL (FLRE) USE WITH INDEX 23	5	
- 24	25-58172- 41	• TUBE ASSY, FUSELAGE FUEL VENT LH	1	
- 25	25-58172- 39	• TUBE ASSY, FUSELAGE FUEL VENT RH	1	
- 26	25-58215- 1	• TUBE ASSY, FUSELAGE FUEL VENT LH	1	
- 27	25-58215- 2	• TUBE ASSY, FUSELAGE FUEL VENT RH	1	

Aft Fuselage

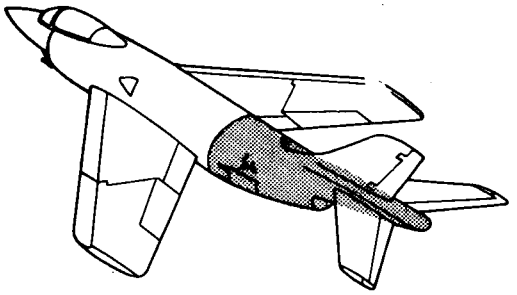

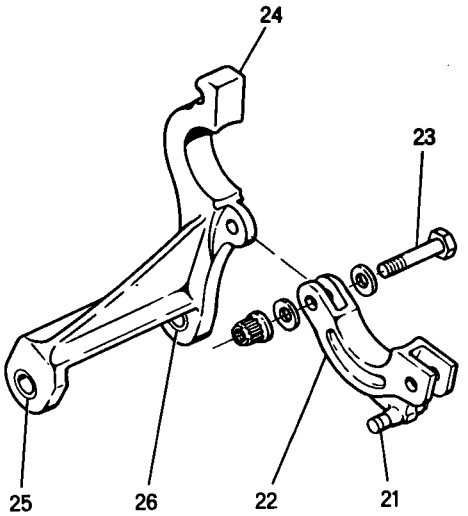

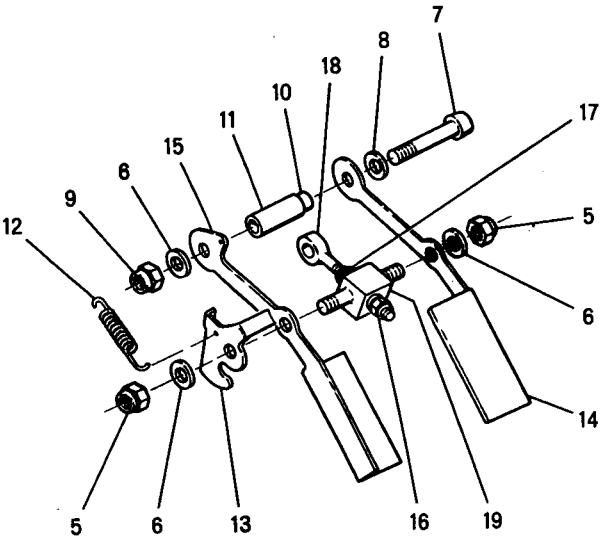

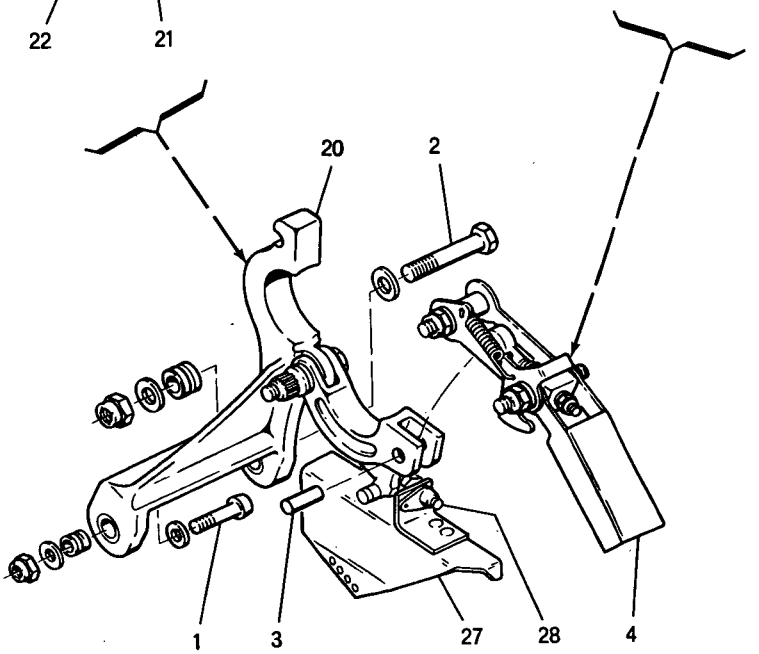

PC25-151

Figure 164 - Engine Aft Mount Installation

FIGURE & INDEX NUMBER	PART NUMBER	1 2 3 4 5 6 7 DESCRIPTION	UNITS PER ASS'Y	USABLE ON CODE
164 -	25-50001- 1	MOUNT INSTL, ENGINE AFT, SEE FIG. 138-13 FOR NEXT HIGHER ASSEMBLY	REF	A-B
	25-50001-301	MOUNT INSTL, ENGINE AFT, SEE FIG. 138-13 FOR NEXT HIGHER ASSEMBLY	REF	C-F
	25-50003- 1	• MOUNT ASSEMBLY, ENGINE AFT LH	1	A-B
	25-50010- 1	• MOUNT ASSEMBLY, ENGINE AFT LH	1	C-F
	25-50003- 2	• MOUNT ASSEMBLY, ENGINE AFT RH	1	A-B
	25-50010- 2	• MOUNT ASSEMBLY, ENGINE AFT RH	1	C-F
		ATTACHING PARTS		
- 1	NAS145-21	• BOLT	2	
	NAS143-5C	• WASHER	2	
	NAS72-5-005	• BUSHING	2	
	AN960D516	• WASHER	2	
	42FW524	• NUT (SPS)	2	
- 2	NAS464-7A18	• BOLT	2	
	AN960D716	• WASHER	4	
	NAS72-7-007	• BUSHING	2	
	22FT720	• NUT (SPS)	2	A-B
		□----□-□-□----□		
- 3	25-50083- 3	• • PIN, LATCH COMPRESSION LINK	1	
- 4	25-50003- 5	• • HANDLE ASSEMBLY, ENGINE AFT MOUNT	1	A-B
	25-50010- 3	• • HANDLE ASSEMBLY, ENGINE AFT MOUNT	1	C-F
- 5	22FT428	• • • NUT (SPS)	2	
- 6	AN960-416	• • • WASHER	3	
- 7	NAS144-27	• • • BOLT	1	A-B
	NAS145-28	• • • BOLT	1	C-F
- 8	NAS143-4C	• • • WASHER	1	A-B
	NAS143-5C	• • • WASHER	1	C-F
- 9	42FW428	• • • NUT (SPS)	1	A-B
	42FW524	• • • NUT (SPS)	1	C-F
- 10	25-50084- 3	• • • SLEEVE, LATCH TENSION TRUNNION INNER	1	A-B
	25-50116- 3	• • • SLEEVE, LATCH TENSION TRUNNION INNER	1	C-F
- 11	25-50085- 3	• • • SLEEVE, LATCH TENSION TRUNNION OUTER	1	A-B
	25-50117- 3	• • • SLEEVE, LATCH TENSION TRUNNION OUTER	1	C-F
- 12	15-51031- 3	• • • SPRING, ENGINE AFT MOUNT SAFETY EXTENSION	1	
- 13	15-51022- 5	• • • ARM, ENGINE AFT MOUNT SAFETY	1	
- 14	25-50076- 3	• • • LINK, LATCH TENSION UPPER	1	A-B
	25-50076- 5	• • • LINK, LATCH TENSION UPPER	1	C-F
- 15	25-50077- 3	• • • LINK, LATCH TENSION LOWER	1	A-B
	25-50077- 5	• • • LINK, LATCH TENSION LOWER	1	C-F
- 16	22FT624	• • • NUT (SPS)	1	
	AN960-616	• • • WASHER, USE WITH INDEX 16	1	
- 17	42FW624	• • • NUT (SPS)	1	
	AN960-616	• • • WASHER, USE WITH INDEX 17	1	
- 18	19-51032- 3	• • • LINK, LATCH COMPRESSION	1	
- 19	25-50082- 3	• • • TRUNNION, LATCH COMPRESSION	1	A-B
	25-50082- 5	• • • TRUNNION, LATCH COMPRESSION	1	C-F
- 20	25-50003- 7	• • MOUNT ASSEMBLY, ENGINE AFT LH	1	A-B
	25-50010- 5	• • MOUNT ASSEMBLY, ENGINE AFT LH	1	C-F
	25-50003- 8	• • MOUNT ASSEMBLY, ENGINE AFT RH	1	A-B
	25-50010- 6	• • MOUNT ASSEMBLY, ENGINE AFT RH	1	C-F
- 21	AN392-35	• • • PIN, FLAT HEAD	1	
	NAS42C4-17	• • • SPACER, USE WITH INDEX 21	1	
	AN960-4	• • • WASHER, USE WITH INDEX 21	1	
	AN380-2-1	• • • PIN, COTTER, USE WITH INDEX 21	1	
- 22	25-50064- 3	• • • GATE, ENGINE AFT MOUNT	1	A-B
	25-50111- 3	• • • GATE, ENGINE AFT MOUNT	1	C-F
		ATTACHING PARTS		
- 23	NAS464-5A13	• • • BOLT	1	A-B
	NAS464-6A13	• • • BOLT	1	C-F
	AN960-516	• • • WASHER	2	A-B
	AN960-616	• • • WASHER	2	C-F
	22FT524	• • • NUT (SPS)	1	A-B
	22FT624	• • • NUT (SPS)	1	C-F
		□----□-□-□----□		
- 24	25-50062- 1	• • • ROCKER ASSEMBLY, ENGINE AFT MOUNT LH	1	A-B
	25-50112- 1	• • • ROCKER ASSEMBLY, ENGINE AFT MOUNT LH	1	C-F
	25-50062- 2	• • • ROCKER ASSEMBLY, ENGINE AFT MOUNT RH	1	A-B
	25-50112- 2	• • • ROCKER ASSEMBLY, ENGINE AFT MOUNT RH	1	C-F
- 25	4M33P7-008	• • • BUSHING(MDA)	1	A-B
	4M33P8-008	• • • BUSHING(MDA)	1	C-F
- 26	4M33P10-014	• • • BUSHING(MDA)	1	
- 27	25-50080- 1	• STOP ASSEMBLY, ENGINE AFT MOUNT LH	1	
	25-50080- 2	• STOP ASSEMBLY, ENGINE AFT MOUNT RH	1	
- 28	NAS428-4-10	• • BOLT	1	
	AN316-4R	• • NUT, USE WITH INDEX 28	1	

Armament

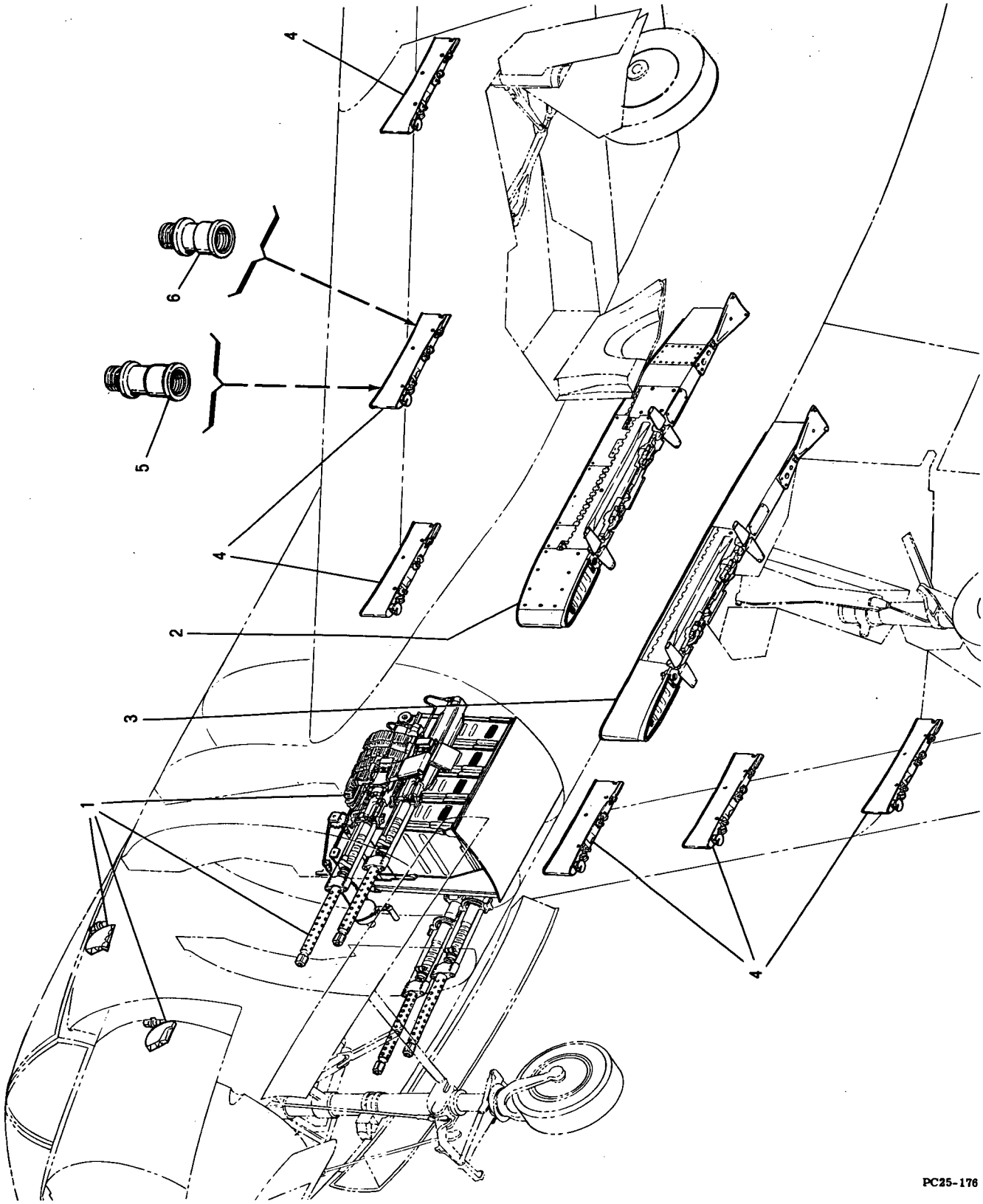

Figure 165 -- Armament Installation

FIGURE & INDEX NUMBER	PART NUMBER	1 2 3 4 5 6 7 DESCRIPTION	UNITS PER ASS'Y	USABLE ON CODE
165 -	25-71000- 1	ARMAMENT INSTALLATION, SEE FIG. 1 FOR NEXT HIGHER ASSEMBLY	REF	
- 1	25-71001- 1	. GUN INSTALLATION, SEE FIG. 166	1	
- 2	25-91003- 1	. PYLON INSTALLATION, GENERAL PURPOSE LH, FOR FUTURE PROCUREMENT USE 25-91003-301, SEE FIG. 174	1	A-C
	25-91003-301	. PYLON INSTALLATION, GENERAL PURPOSE LH, USE FOR FUTURE PROCUREMENT TO REPLACE 25-91003-1, SEE FIG. 174	1	
- 3	25-91003- 2	. PYLON INSTALLATION, GENERAL PURPOSE RH, FOR FUTURE PROCUREMENT USE 25-91003-302, SEE FIG. 174	1	A-C
	25-91003-302	. PYLON INSTALLATION, GENERAL PURPOSE RH, USE FOR FUTURE PROCUREMENT TO REPLACE 25-91003-2, SEE FIG. 174	1	
	25-73001- 1	. LAUNCHER INSTALLATION, COMBINATION BOMB RACKS & ROCKET	1	
- 4	NO NUMBER	. . LAUNCHER, AERO 14B1 OR AERO 15A, GFP, DWG 52A318R1-1, DOUGLAS AIRCRAFT, TO BE TRIMMED TO FIT INDIVIDUAL WING POSITIONS & MARKED WITH ASO STOCK NUMBERS	6	
- 5	25-73056- 7	. . ADAPTER, AERO 14B1 & AERO 15A LAUNCHER ATTACH FWD	6	
- 6	25-73056- 3	. . ADAPTER, AERO 14B1 & AERO 15A LAUNCHER ATTACH AFT	6	

Armament

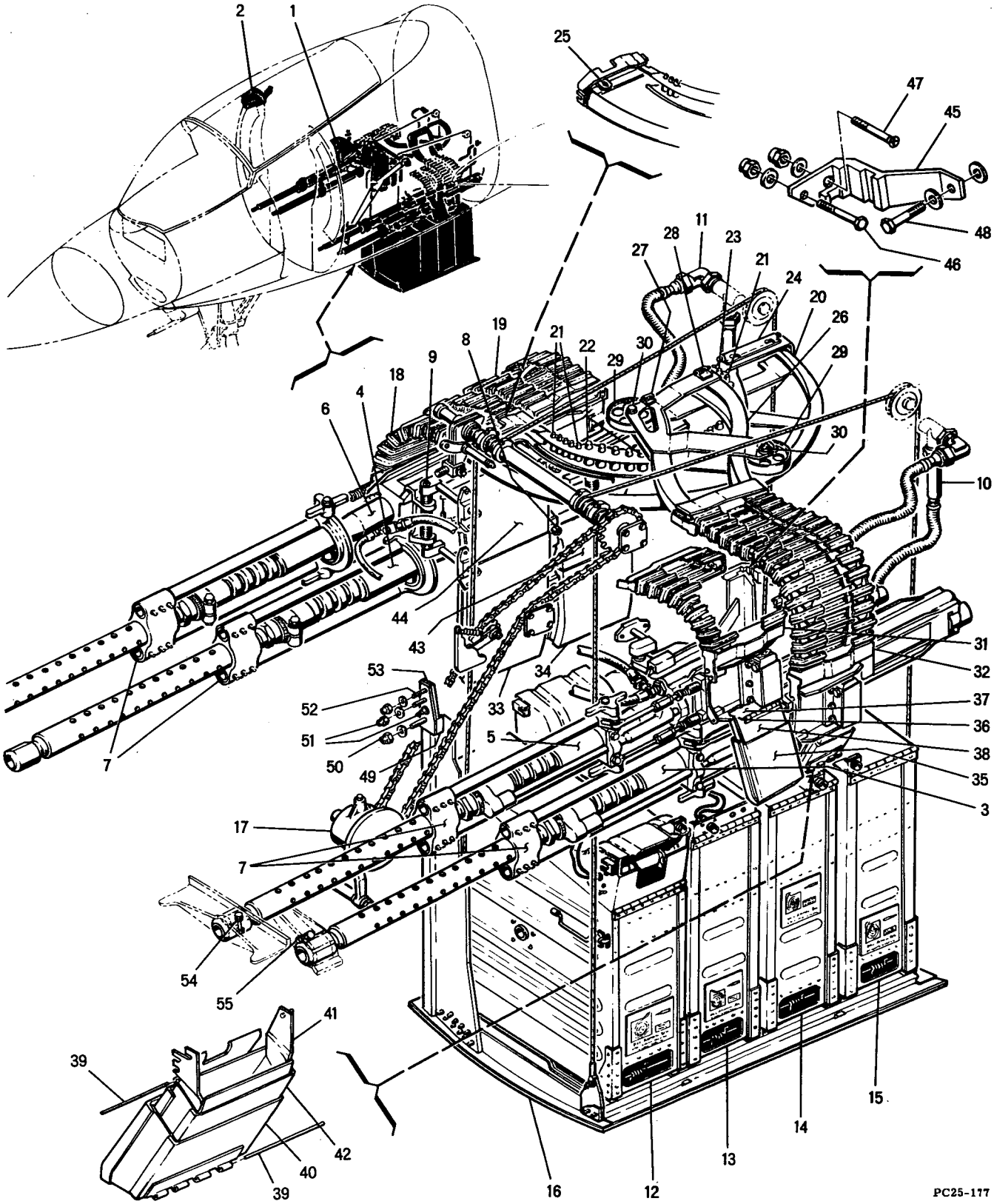

Figure 166 -- Gun Installation

FIGURE & INDEX NUMBER	PART NUMBER	1 2 3 4 5 6 7 DESCRIPTION	UNITS PER ASS'Y	USABLE ON CODE
166 -	25-71001- 1	GUN INSTALLATION, SEE FIG. 165-1 FOR NEXT HIGHER ASSEMBLY	REF	
- 1	25-71182- 1	. VENT INSTALLATION, GUN COMPT LH, SEE FIG. 172	1	
- 2	25-71182- 2	. VENT INSTALLATION, GUN COMPT RH, SEE FIG. 172	1	
- 3	25-71002- 1	. GUN ASSEMBLY, MK 12 MOD 0 20MM LOWER LH, SEE FIG. 173	1	
- 4	25-71002- 2	. GUN ASSEMBLY, MK 12 MOD 0 20MM LOWER RH, SEE FIG. 173	1	
- 5	25-71002- 3	. GUN ASSEMBLY, MK 12 MOD 0 20MM UPPER LH, SEE FIGC 173	1	
- 6	25-71002- 4	. GUN ASSEMBLY, MK 12 MOD 0 20MM UPPER RH, SEE FIG. 173	1	
- 7	25-71049- 1	. MOUNT ASSEMBLY, GUN FRONT, SEE FIG. 173	4	
		ATTACHING PARTS		
	AN4-11A	. BOLT	8	
	AN960-416	. WASHER	16	
	AN364-428	. NUT	8	
		¤----¤-¤-¤----¤		
- 8	25-71030- 2	. MOUNT ASSEMBLY, LOWER RIGHT GUN REAR, SEE FIG. 173	1	
	25-71030- 1	. MOUNT ASSEMBLY, LOWER LEFT GUN REAR, SEE FIG. 173	1	
- 9	25-71030- 4	. MOUNT ASSEMBLY, UPPER RIGHT GUN REAR, SEE FIG. 173	1	
	25-71030- 3	. MOUNT ASSEMBLY, UPPER LEFT GUN REAR, SEE FIG. 173	1	
		ATTACHING PARTS		
	AN4-10A	. BOLT	16	
	AN960D416L	. WASHER	16	
	AN960D416	. WASHER	16	
		¤----¤-¤-¤----¤		
- 10	25-71072- 1	. HOSE INSTALLATION, GUN HEATER LH, SEE FIG. 171	1	
- 11	25-71072- 2	. HOSE INSTALLATION, GUN HEATER RH, SEE FIG. 171	1	
- 12	25-71145- 1	. BOX ASSEMBLY, NO. 1 AMMUNITION, SEE FIG. 169	1	
- 13	25-71146- 1	. BOX ASSEMBLY, NO. 2 AMMUNITION, SEE FIG. 169	1	
- 14	25-71147- 1	. BOX ASSEMBLY, NO. 3 AMMUNITION, SEE FIG. 169	1	
- 15	25-71148- 1	. BOX ASSEMBLY, NO. 4 AMMUNITION, SEE FIG. 169	1	
- 16	25-71066- 1	. ELEVATOR ASSY, AMMUNITION BOX, SEE FIG. 167	1	
- 17	25-71069- 1	. HOIST INSTL, AMMUNITION ELEV, SEE FIG. 167	1	
- 18	M12-918	. CHUTE ASSEMBLY, GUN FEED (SAIE)	1	
- 19	M12-920	. CHUTE ASSEMBLY, GUN FEED (SAIE)	1	
- 20	25-71223- 1	. CHUTE ASSEMBLY, AMMUNITION BOX NO. 4 FEED	1	
- 21	25-71251- 3	. . RIVET, AMMUNITION BOX NO. 4 FEED CHUTE	7	
	NAS42HT6-22	. . SPACER, USE WITH INDEX 21	7	
	33KDD5	. . BEARING (FAF) USE WITH INDEX 21	7	
	NAS42HT6-51	. . SPACER, USE WITH INDEX 21	7	
- 22	HS47-6-27	. . PIN, BEARING SUPPORT (HIS)	18	
	NAS43DD3-19	. . SPACER, USE WITH INDEX 22	18	
	AN200KP3	. . BEARING, USE WITH INDEX 22	18	
	NAS43DD3-48	. . SPACER, USE WITH INDEX 22	18	
- 23	25-71251- 5	. . RIVET, AMMUNITION BOX NO. 4 FEED CHUTE	2	
	NAS42HT6-22	. . SPACER, USE WITH INDEX 23	2	
	33KDD5	. . BEARING (FAF) USE WITH INDEX 23	2	
	NAS42HT6-51	. . SPACER, USE WITH INDEX 23	2	
- 24	1010-52	. . HINGE, RELEASE (BUR)	1	
- 25	98292-3-.270	. . STUD (MKL) USE WITH 99947P.130 RECEPTACLE (MKL)	1	
	99836	. . PIN, CROSS (MKL)	1	
	25-71162- 3	. . BUSHING, AMMUNITION CHUTE SHEAR, USE WITH INDEX 25	1	
- 26	25-71224- 1	. CHUTE ASSEMBLY, AMMUNITION BOX NO. 3 FEED	1	
- 27	2012L6S	. . HINGE, RELEASE (BUR)	1	
- 28	2012R6S	. . HINGE, RELEASE (BUR)	1	
- 29	25-71177- 1	. . ROLLER ASSEMBLY, AMMUNITION FEED CHUTE	2	
		ATTACHING PARTS		
- 30	AN4-17A	. . BOLT	2	
	AN960D416L	. . WASHER	2	
	AN960D716L	. . WASHER	2	
	NAS73-4-102	. . BUSHING	2	
	AN960D716	. . WASHER	2	
	AN960D416	. . WASHER	2	
	AN364-428	. . NUT	2	
		¤----¤-¤-¤----¤		
	4M33P7-031	. . . BUSHING (MDA)	1	
	98292-3-.330	. . STUD (MKL) USE WITH 99947P.130 RECEPTACLE (MKL)	2	
	99836	. . PIN, CROSS (MKL)	2	
	25-71162- 3	. . BUSHING, AMMUNITION CHUTE SHEAR, USE WITH 99947P.130 RECEPTACLE (MKL)	2	

FIGURE & INDEX NUMBER	PART NUMBER	1 2 3 4 5 6 7 DESCRIPTION	UNITS PER ASS'Y	USABLE ON CODE
166 - 31	M12-917	. CHUTE ASSEMBLY, GUN FEED (SAIE)	1	
- 32	M12-919	. CHUTE ASSEMBLY, GUN FEED (SAIE)	1	
- 33	25-71211- 1	. CHUTE ASSEMBLY, LOWER GUN CASE EJECTION LH	1	
	25-71211- 2	. CHUTE ASSEMBLY, LOWER GUN CASE EJECTION RH	1	
- 34	25-71212- 1	. CHUTE ASSEMBLY, UPPER GUN CASE EJECTION LH	1	
	25-71212- 2	. CHUTE ASSEMBLY, UPPER GUN CASE EJECTION RH	1	
		ATTACHING PARTS		
	AN509-10R8	. SCREW	16	
		¤----¤-¤-¤----¤		
	25-71043- 1	. CHUTE ASSEMBLY, UPPER LEFT GUN LINK EJECTION	1	
	25-71043- 2	. CHUTE ASSEMBLY, UPPER RIGHT GUN LINK EJECTION	1	
- 35	25-71043- 57	. . CHUTE ASSY, UPPER LEFT GUN LINK EJECTION	1	
	25-71043- 58	. . CHUTE ASSY, UPPER RIGHT GUN LINK EJECTION	1	
	9000-2	. . . HINGE, RELEASE (BUR)	1	
- 36	AN253-2-338	. . PIN, HINGE	1	
- 37	25-71043- 61	. . CHUTE ASSY, UPPER LEFT GUN LINK EJECTION	1	
	25-71043- 62	. . CHUTE ASSY, UPPER RIGHT GUN LINK EJECTION	1	
	AN257HC2-350	. . . HINGE, HALF	1	
- 38	25-71043- 5	. . CHUTE ASSEMBLY	1	
	AN257HC2-350	. . . HINGE, HALF	1	
	25-71044- 1	. CHUTE ASSEMBLY, LOWER LEFT GUN LINK EJECTION	1	
	25-71044- 2	. CHUTE ASSEMBLY, LOWER RIGHT GUN LINK EJECTION	1	
- 39	AN253-3-388	. . PIN, HINGE	2	
- 40	25-71044- 7	. . CHUTE ASSEMBLY	1	
	25-71044- 36	. . . HINGE, HALF, ALTERED FROM GOVERNMENT STANDARD PART NO. AN257XC3-400	1	
- 41	25-71044- 41	. . CHUTE ASSY, LOWER LEFT GUN LINK EJECTION	1	
	25-71044- 42	. . CHUTE ASSY, LOWER RIGHT GUN LINK EJECTION	1	
	25-71044- 29	. . . HINGE, HALF, ALTERED FROM GOVERNMENT STANDARD PART NO. AN257HC2-350	1	
	25-71044- 31	. . . HINGE, HALF, ALTERED FROM GOVERNMENT STANDARD PART NO. AN257HC2-350	1	
- 42	25-71044- 5	. . CHUTE ASSEMBLY	1	
	25-71044- 33	. . . HINGE, HALF, ALTERED FROM GOVERNMENT STANDARD PART NO. AN257HC2-350	1	
- 43	25-71207- 1	. CHUTE ASSEMBLY, LOWER GUN CASE EJECTION ADJUSTABLE LH	1	
	25-71207- 2	. CHUTE ASSEMBLY, LOWER GUN CASE EJECTION ADJUSTABLE RH	1	
- 44	25-71213- 1	. CHUTE ASSEMBLY, UPPER GUN CASE EJECTION ADJUSTABLE LH	1	
	25-71213- 2	. CHUTE ASSEMBLY, UPPER GUN CASE EJECTION ADJUSTABLE RH	1	
- 45	25-71181- 3	. GUIDE, AMMUNITION ELEVATOR BASE REAR	1	
		ATTACHING PARTS		
- 46	AN3-15A	. BOLT	1	
	AN960D10L	. WASHER	1	
	AN365-1032	. NUT	1	
- 47	AN509-10R27	. SCREW	1	
	AN960D10L	. WASHER	1	
	AN365-1032	. NUT	1	
- 48	AN5-12A	. BOLT	1	
	AN960D516L	. WASHER	AR	
		¤----¤-¤-¤----¤		
- 49	25-71192- 3	. GUIDE, AMMUNITION ELEVATOR BASE FORWARD	1	
		ATTACHING PARTS		
- 50	AN509-416R18	. SCREW	1	
	AN960D416	. WASHER	1	
	AN365-428	. NUT	1	
- 51	AN509-10R16	. SCREW	2	
	AN960D10	. WASHER	2	
	AN365-1032	. NUT	2	
- 52	AN509-10R18	. SCREW	1	
	AN960D10	. WASHER	1	
	AN365-1032	. NUT	1	
		¤----¤-¤-¤----¤		
- 53	25-71198- 3	. SHIM, AMMUNITION ELEVATOR BASE FORWARD GUIDE	AR	
- 54	AN4-35A	. BOLT	2	
	AN960-416L	. WASHER	2	
	AN960-416	. WASHER	2	
	AN364-428	. NUT	2	
- 55	AN4-31A	. BOLT	2	
	AN960-416L	. WASHER	2	
	AN960-416	. WASHER	2	
	AN364-428	. NUT	2	

FIGURE & INDEX NUMBER	PART NUMBER	1 2 3 4 5 6 7 DESCRIPTION	UNITS PER ASS'Y	USABLE ON CODE
167 -	25-71066- 1	ELEVATOR ASSY, AMMUNITION BOX, SEE FIG. 166-16 FOR NEXT HIGHER ASSEMBLY	REF	
- 1	25-71184- 5	• ROLLER, AMMUNITION ELEVATOR BASE	5	
		ATTACHING PARTS		
- 2	AN394-39	• PIN, FLAT HEAD	5	
	AN960D416L	• WASHER	5	
	AN380-2-2	• PIN, COTTER	5	
		¤----¤-¤-¤----¤		
- 3	25-71197- 3	• RAIL, AMMUNITION ELEVATOR ROLLER FORWARD	1	
- 4	25-71184- 5	• ROLLER, AMMUNITION ELEVATOR BASE	18	
		ATTACHING PARTS		
- 5	AN394-51	• PIN, FLAT HEAD	9	
	AN960D416L	• WASHER	9	
	AN380-2-2	• PIN, COTTER	9	
		¤----¤-¤-¤----¤		
- 6	25-71196- 3	• RAIL, AMMUNITION ELEVATOR ROLLER CENTER	3	
- 7	25-71189- 5	• ADAPTER, AMMUNITION ELEVATOR LOCK LH	4	
- 8	25-71189- 6	• ADAPTER, AMMUNITION ELEVATOR LOCK RH	4	
- 9	25-71180- 3	• FITTING, AMMUNITION ELEVATOR CENTER	2	
- 10	25-71184- 3	• ROLLER, AMMUNITION ELEVATOR BASE	1	
		ATTACHING PARTS		
- 11	AN3-12A	• BOLT	1	
	NAS43-3-27	• SPACER	1	
	NAS43-3-13	• SPACER	1	
	AN960D10L	• WASHER	1	
	AN365-1032	• NUT	1	
		¤----¤-¤-¤----¤		
- 12	25-71173- 3	• RAIL, AMMUNITION ELEVATOR ROLLER AFT	1	
	25-71068- 1	• MECHANISM INSTL, AMMUNITION ELEVATOR LOCK	1	
- 13	25-71186- 3	• • SPRING, AMMUNITION ELEVATOR LOCK EXTENSION	1	
- 14	25-71155- 3	• • LEVER, AMMUNITION ELEVATOR LOCKING	1	
		ATTACHING PARTS		
- 15	AN3-14A	• • BOLT	1	
	AN960D10	• • WASHER	2	
	AN960-516L	• • WASHER	2	
	NAS43DD3-56	• • SPACER	1	
	AN365-1032	• • NUT	1	
		¤----¤-¤-¤----¤		
- 16	25-71153- 3	• • SPRING, AMMUNITION ELEVATOR LOCKING TORSION	1	
- 17	52-028-125-1125	• • PIN, ROLL (EN)	1	
- 18	25-71152- 3	• • HANDLE, AMMUNITION ELEVATOR LOCKING	1	
- 19	25-71172- 3	• • PIN, AMMUNITION ELEVATOR LOCK	4	
		ATTACHING PARTS		
- 20	AN393-17	• • PIN, FLAT HEAD	4	
	AN960D10L	• • WASHER	4	
	AN380-2-1	• • PIN, COTTER	4	
		¤----¤-¤-¤----¤		
- 21	25-71191- 5	• • LINK, AMMUNITION ELEVATOR LOCK	2	
		ATTACHING PARTS		
- 22	AN393-15	• • PIN, FLAT HEAD	2	
	AN960D10L	• • WASHER	2	
	AN380-2-1	• • PIN, COTTER	2	
		¤----¤-¤-¤----¤		
- 23	25-71191- 3	• • LINK, AMMUNITION ELEVATOR LOCK	2	
		ATTACHING PARTS		
- 24	AN393-25	• • PIN, FLAT HEAD, FORWARD	1	
	NAS43-3-18	• • SPACER	1	
	AN960D10L	• • WASHER	1	
	AN380-2-1	• • PIN, COTTER	1	
- 25	AN393-15	• • PIN, FLAT HEAD, AFT	1	
	AN960D10L	• • WASHER	1	
	AN380-2-1	• • PIN, COTTER	1	
		¤----¤-¤-¤----¤		
- 26	25-71190- 3	• • BELL CRANK, AMMUNITION ELEVATOR LOCK	2	
		ATTACHING PARTS		
- 27	AN393-29	• • PIN, FLAT HEAD	2	
	AN380-2-1	• • PIN, COTTER	2	
		¤----¤-¤-¤----¤		
- 28	52-028-125-0687	• • PIN, ROLL (EN)	1	
- 29	25-71225- 3	• • PLUG, AMMUNITION ELEVATOR TORQUE TUBE	1	
- 30	25-71199- 7	• • TUBE, AMMUNITION ELEVATOR TORQUE	1	
		ATTACHING PARTS		
- 31	AN380-3-4	• • PIN, COTTER	3	
	AN960D1016	• • WASHER	3	
		¤----¤-¤-¤----¤		

Armament

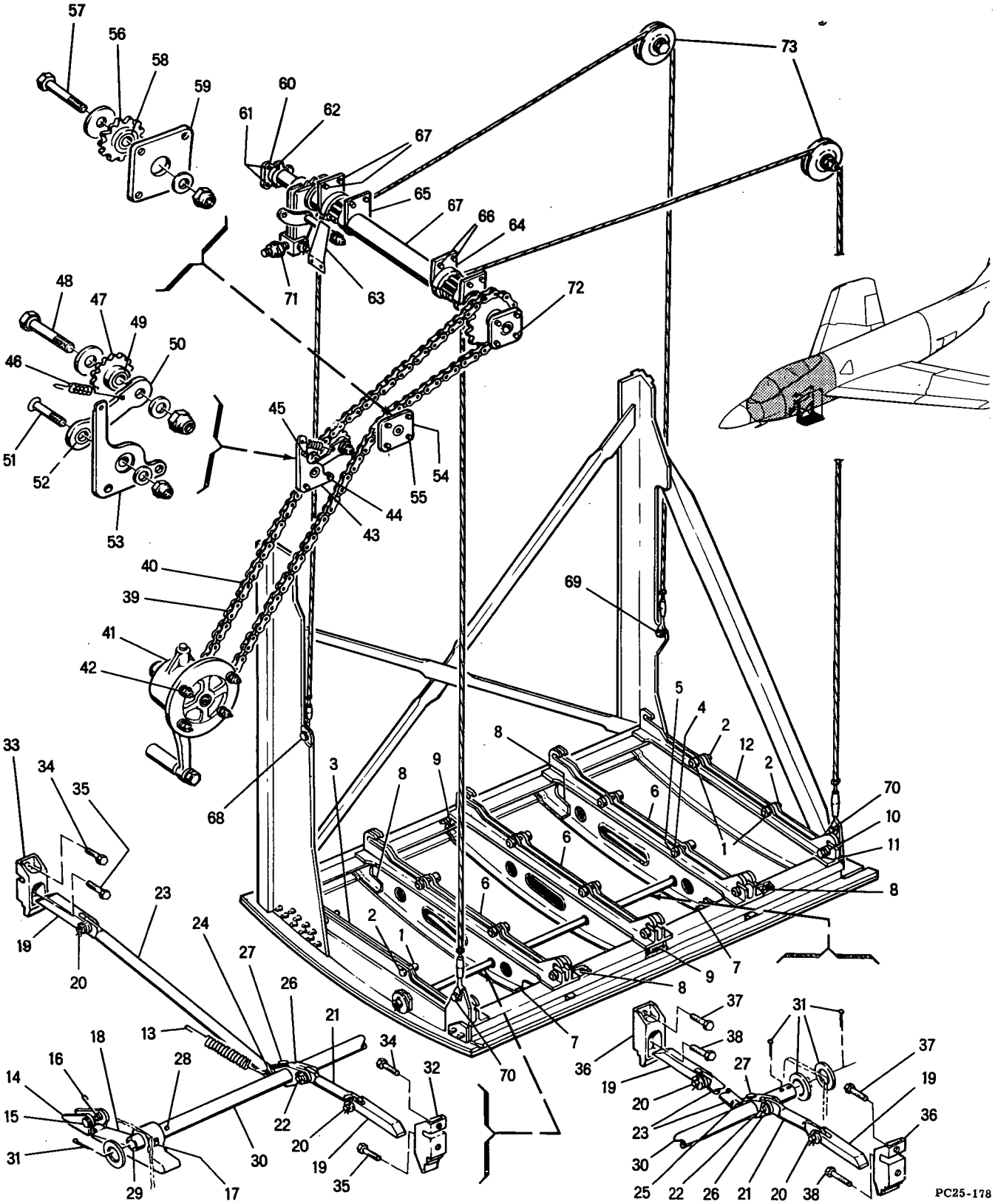

Figure 167 -- Ammunition Box Elevator Assembly and Hoist Installation

FIGURE & INDEX NUMBER	PART NUMBER	1 2 3 4 5 6 7 DESCRIPTION	UNITS PER ASS'Y	USABLE ON CODE
167 - 32	25-71187- 3	• • SUPPORT, AMMUNITION ELEVATOR FRONT LH	1	
- 33	25-71187- 4	• • SUPPORT, AMMUNITION ELEVATOR FRONT RH	1	
		ATTACHING PARTS		
- 34	AN3-6A	• • BOLT	2	
	AN960D10	• • WASHER	4	
	AN365-1032	• • NUT	2	
- 35	AN4-10A	• • BOLT	2	
	AN960D416	• • WASHER	2	
	AN365-428	• • NUT	2	
		¤----¤-¤-¤----¤		
- 36	25-71200- 3	• • SUPPORT, AMMUNITION ELEVATOR REAR LOCK	2	
		ATTACHING PARTS		
- 37	AN3-6A	• • BOLT	2	
	AN960D10	• • WASHER	4	
	AN365-1032	• • NUT	2	
- 38	AN4-10A	• • BOLT	2	
	AN960D416	• • WASHER	2	
	AN365-428	• • NUT	2	
		¤----¤-¤-¤----¤		
	25-71069- 1	HOIST INSTL, AMMUNITION ELEVATOR, SEE FIG. 166-17 FOR NEXT HIGHER ASSEMBLY	REF	
- 39	COMM	• CHAIN, 204 PITCH, SELECTED FROM X121882 (DI) 76.50 IN. LONG	1	
- 40	COMM	• LOCK, CHAIN, TYPE C (DI)	1	
- 41	25-71070- 3	• WINCH ASSY, AMMUNITION ELEVATOR, SEE FIG. 168	1	
		ATTACHING PARTS		
- 42	AN4-10A	• BOLT	4	
	AN960D416L	• WASHER	4	
	AN960D416	• WASHER	8	
	AN364-428	• NUT	4	
		¤----¤-¤-¤----¤		
- 43	25-71087- 1	• IDLER ASSEMBLY, HOIST CHAIN FORWARD	1	
		ATTACHING PARTS		
- 44	AN3-7A	• BOLT	2	
	AN960D10L	• WASHER	2	
	AN960D10	• WASHER	2	
	AN364-1032	• NUT	2	
- 45	AN3-7A	• BOLT	1	
	AN960D10L	• WASHER	1	
	AN960D10	• WASHER	2	
	AN364-1032	• NUT	1	
		¤----¤-¤-¤----¤		
- 46	25-71095- 5	• • SPRING, HOIST CHAIN FORWARD IDLER EXTENSION	1	
- 47	25-71096- 3	• • SPROCKET, HOIST CHAIN IDLER	1	
		ATTACHING PARTS		
- 48	AN5-10A	• • BOLT	1	
	AN970-5	• • WASHER	1	
	AN960-516L	• • WASHER	1	
	AN364-524	• • NUT	1	
		¤----¤-¤-¤----¤		
- 49	25-71097- 3	• • BUSHING, HOIST CHAIN IDLER	1	
- 50	25-71094- 3	• • ARM, HOIST CHAIN FORWARD IDLER	1	
		ATTACHING PARTS		
- 51	AN509-416R13	• • SCREW	1	
	AN960-416L	• • WASHER	1	
	AN364-428	• • NUT	1	
		¤----¤-¤-¤----¤		
- 52	25-71098- 3	• • BUSHING, HOIST CHAIN FORWARD IDLER	1	
- 53	25-71092- 3	• • SUPPORT, HOIST CHAIN FORWARD IDLER	1	
- 54	25-71086- 1	• IDLER ASSEMBLY, HOIST CHAIN AFT	1	
		ATTACHING PARTS		
- 55	AN3-7A	• BOLT	4	
	AN960D10L	• WASHER	4	
	AN960D10	• WASHER	4	
	AN364-1032	• NUT	4	
		¤----¤-¤-¤----¤		
- 56	25-71096- 3	• • SPROCKET, HOIST CHAIN IDLER	1	
		ATTACHING PARTS		
- 57	AN5-11A	• • BOLT	1	
	AN970-5	• • WASHER	1	
	AN960D516L	• • WASHER	1	
	AN364-524	• • NUT	1	
		¤----¤-¤-¤----¤		

FIGURE & INDEX NUMBER	PART NUMBER	1 2 3 4 5 6 7 DESCRIPTION	UNITS PER ASS'Y	USABLE ON CODE
167 - 58	25-71097- 3	• • BUSHING, HOIST CHAIN IDLER	1	
- 59	25-71093- 3	• • SUPPORT, HOIST CHAIN AFT IDLER	1	
- 60	25-71077- 1	• FITTING ASSY, AMMUNITION ELEVATOR TORQUE TUBE SUPPORT, RIGHT SIDE, CONSISTS OF MATCHED PARTS. DO NOT ISSUE OR REPLACE 25-71077-3 OR 25-71077-5 SEPARATELY	1	
		ATTACHING PARTS		
- 61	AN3-10A	• BOLT	2	
	AN960D10L	• WASHER	2	
	AN960D10	• WASHER	3	
	AN364-1032	• NUT	2	
- 62	AN3-7A	• BOLT	2	
	AN960D10L	• WASHER	2	
	AN960D10	• WASHER	2	
	AN364-1032	• NUT	2	
	AN3-6A	• BOLT	1	
	AN960D10L	• WASHER	1	
	AN960D10	• WASHER	2	
	AN364-1032	• NUT	1	
		¤----¤-¤-¤----¤		
- 63	25-71226- 3	• SPRING, AMMUNITION ELEVATOR TORQUE TUBE STOP	1	
- 64	25-71085- 1	• GUARD ASSY, AMMUNITION ELEVATOR CABLE LH	1	
- 65	25-71085- 2	• GUARD ASSY, AMMUNITION ELEVATOR CABLE RH	1	
		ATTACHING PARTS		
- 66	AN3-5A	• BOLT	8	
	AN960D10L	• WASHER	8	
	AN960D10	• WASHER	16	
	AN364-1032	• NUT	8	
		¤----¤-¤-¤----¤		
- 67	25-71071- 1	• TUBE ASSY, AMMUNITION ELEVATOR TORQUE, SEE FIG. 168	1	
		ATTACHING PARTS		
- 68	AN3-6A	• BOLT	1	
	AN960-10	• WASHER	1	
	AN364-1032	• NUT	1	
- 69	NAS229-12	• BOLT	1	
	AN960-10	• WASHER	1	
	AN364-1032	• NUT	1	
- 70	NAS229-12	• BOLT	2	
	AN960-10	• WASHER	2	
	AN364-1032	• NUT	2	
- 71	AN364-428	• NUT	1	
	AN960D416	• WASHER	2	
	AN316-4R	• NUT	1	
- 72	AN3-6A	• BOLT	4	
	AN960D10L	• WASHER	4	
	AN960D10	• WASHER	4	
	AN364-1032	• NUT	4	
		¤----¤-¤-¤----¤		
- 73	2003A2	• PULLEY (AMRO)	2	

FIGURE & INDEX NUMBER	PART NUMBER	1 2 3 4 5 6 7 DESCRIPTION	UNITS PER ASS'Y	USABLE ON CODE
168 -	25-71070- 3	WINCH ASSY, AMMUNITION ELEVATOR, SEE FIG. 167-41 FOR NEXT HIGHER ASSEMBLY	REF	
- 1	25-71120- 3	. RETAINER, AMMUNITION ELEVATOR WINCH CRANK	1	
		ATTACHING PARTS		
- 2	52-028-125-1250	. PIN, ROLL (EN)	1	
		¤----¤-¤-¤----¤		
	25-71100- 1	. CRANK ASSY, AMMUNITION ELEVATOR WINCH	1	
- 3	AN3-41A	. . BOLT	1	
	AN365-1032	. . NUT	1	
- 4	25-71161- 3	. . WASHER, AMMUNITION ELEVATOR WINCH CRANK	2	
- 5	25-71103- 3	. . HANDLE, AMMUNITION ELEV WINCH CRANK ROLLER	1	
- 6	AN960D816	. . WASHER	1	
- 7	25-71102- 3	. . TUBE, AMMUNITION ELEV WINCH CRANK HANDLE	1	
- 8	25-71104- 5	. . PAWL, AMMUNITION ELEVATOR WINCH CRANK	1	
- 9	25-71163- 5	. . CRANK, AMMUNITION ELEVATOR HOISTING WINCH	1	
- 10	25-71121- 5	. CLUTCH, AMMUNITION ELEV WINCH OVERLOAD SLIP	1	
- 11	25-71160- 3	. WASHER, AMMUNITION ELEVATOR WINCH SHAFT	1	
- 12	25-71057- 3	. SPACER, AMMUNITION ELEVATOR WINCH HANDLE	1	
- 13	AN365-624	. NUT	1	
- 14	AN960D616	. WASHER	2	
- 15	25-71158- 3	. RING, AMMUNITION ELEVATOR WINCH BASE LOCK	1	
- 16	25-71116- 1	. PLATE ASSY, AMMUNITION ELEV WINCH HOUSING BASE	1	
	AN201KP10A	. . BEARING	1	
- 17	25-71154- 3	. STOP, AMMUNITION ELEVATOR WINCH SPROCKET	1	
- 18	25-71123- 1	. SPROCKET ASSY, AMMUNITION ELEVATOR WINCH CHAIN	1	
- 19	B88	. . BEARING (TOR)	1	
- 20	25-71111- 1	. RATCHET ASSY, AMMUNITION ELEVATOR WINCH BRAKE	1	
- 21	25-71118- 11	. PAWL, AMMUNITION ELEVATOR WINCH BRAKE RATCHET	1	
- 22	25-71119- 5	. SPRING, AMMUNITION ELEVATOR WINCH BRAKE RATCHET PAWL COMPRESSION	1	
- 23	25-71250- 3	. DISK, AMMUNITION ELEVATOR WINCH CLUTCH	1	
- 24	25-71122- 3	. SHAFT, AMMUNITION ELEVATOR WINCH	1	
- 25	25-71107- 3	. COVER ASSY, AMMUNITION ELEVATOR WINCH HOUSING	1	
- 26	25-71109- 5	. . RECEPTACLE, AMMUNITION ELEV WINCH RATCHET PAWL	1	
		ATTACHING PARTS		
- 27	52-022-099-0875	. . PIN, ROLL (EN)	1	
		¤----¤-¤-¤----¤		
- 28	AN201KP16A	. . BEARING	1	
	25-71071- 1	TUBE ASSEMBLY, AMMUNITION ELEVATOR TORQUE, SEE FIG. 167-67 FOR NEXT HIGHER ASSEMBLY	REF	
- 29	AN201KP10A	. BEARING	1	
- 30	25-71105- 3	. SUPPORT, AMMUNITION ELEVATOR TORQUE TUBE LEFT SIDE	1	
		ATTACHING PARTS		
- 31	AN6-14A	. BOLT	1	
	AN960-616	. WASHER	1	
	4M36-03002	. WASHER (MDA)	2	
	AN365-624	. NUT	1	
		¤----¤-¤-¤----¤		
- 32	6NBK919YZP	. BEARING (TOR) ALTERNATE AT6SDA (TOR)	1	
- 33	25-71074- 3	. SPROCKET, AMMUNITION ELEVATOR TORQUE TUBE	1	
- 34	25-71143- 3	. BUSHING, AMMUNITION ELEVATOR TORQUE TUBE	1	
- 35	AN161-22LL	. FORK	2	
- 36	AN155-32L	. BARREL, TURNBUCKLE	4	
- 37	AN669L4RH	. TERMINAL, CABLE	4	
	AN664C4	. TERMINAL, CABLE	4	
- 38	25-71071- 3	. CABLE, AMMUNITION ELEV TORQUE TUBE LEFT SIDE FORWARD	1	
- 39	25-71071- 5	. CABLE, AMMUNITION ELEVATOR TORQUE TUBE LEFT SIDE AFT	1	
- 40	25-71202- 3	. DRUM, AMMUNITION ELEVATOR CABLE LEFT SIDE	1	
		ATTACHING PARTS		
- 41	52-048-219-2000	. PIN, ROLL (EN)	2	
		¤----¤-¤-¤----¤		
- 42	AN165-22LL	. EYE	2	
- 43	25-71071- 7	. CABLE, AMMUNITION ELEVATOR TORQUE TUBE RIGHT SIDE AFT	1	
- 44	25-71071- 9	. CABLE, AMMUNITION ELEV TORQUE TUBE RIGHT SIDE FORWARD	1	
- 45	25-71201- 3	. DRUM, AMMUNITION ELEVATOR CABLE RIGHT SIDE	1	
		ATTACHING PARTS		
- 46	52-048-219-2000	. PIN, ROLL (EN)	2	
		¤----¤-¤-¤----¤		

Armament

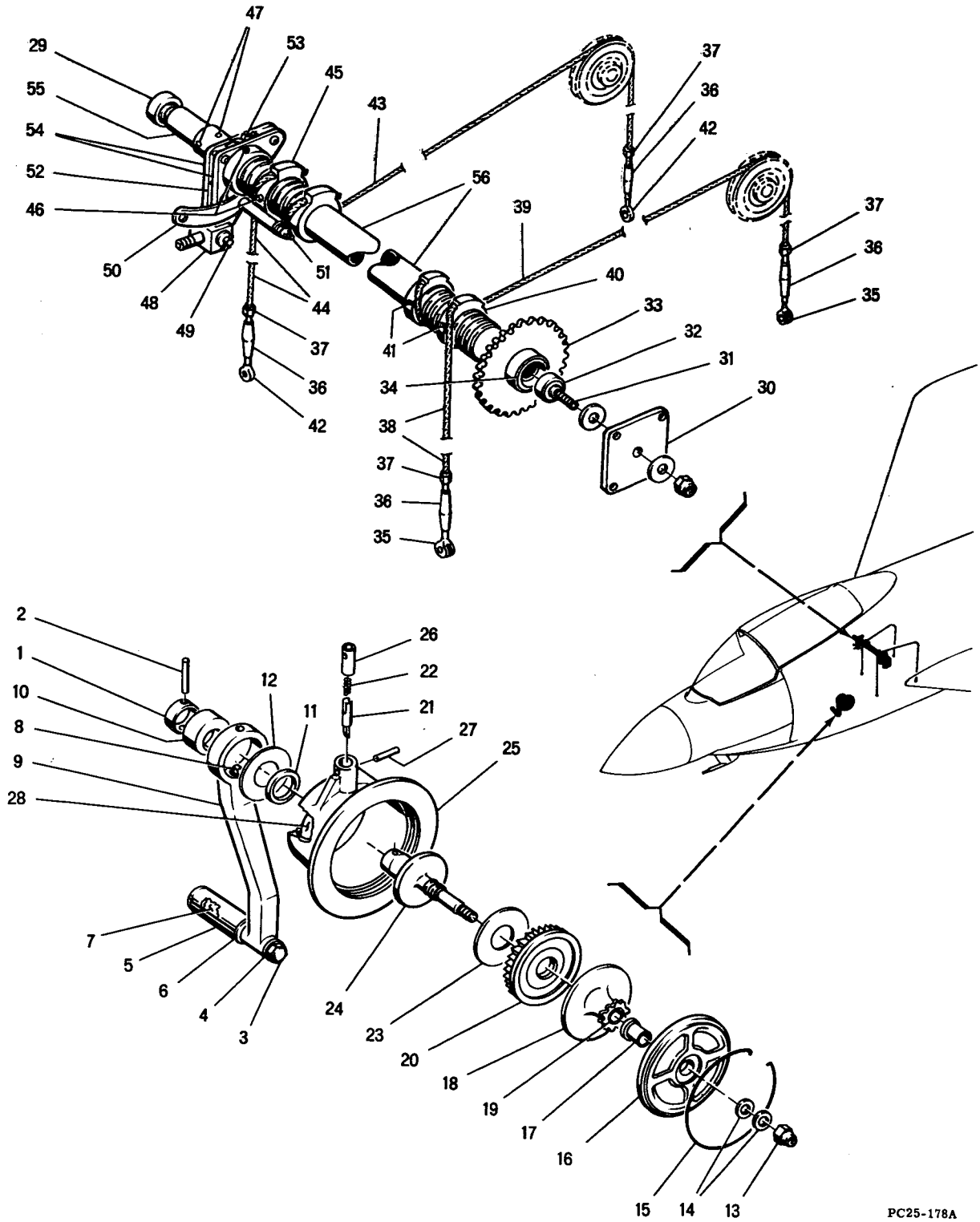

Figure 168 -- Ammunition Elevator Winch and Torque Tube Assemblies

FIGURE & INDEX NUMBER	PART NUMBER	1 2 3 4 5 6 7 DESCRIPTION	UNITS PER ASS'Y	USABLE ON CODE
168 -	25-71129- 1	• STOP ASSY, AMMUNITION ELEVATOR TORQUE TUBE	1	
		ATTACHING PARTS		
- 47	52-040-187-1250	• PIN, ROLL (EN)	2	
		¤----¤-¤-¤----¤		
- 48	25-71227- 3	• • LINK, AMMUNITION ELEVATOR TORQUE TUBE STOP	1	
		ATTACHING PARTS		
- 49	AN394-23	• • PIN, FLAT HEAD	1	
	AN960-416	• • WASHER	1	
	AN380-2-3	• • PIN, COTTER	1	
		¤----¤-¤-¤----¤		
- 50	25-71176- 5	• • LINK, AMMUNITION ELEVATOR TORQUE TUBE	1	
		ATTACHING PARTS		
- 51	AN3-30A	• • BOLT	1	
	NAS43DD5-13	• • SPACER	1	
	25-71175- 3	• • SPACER, AMMUNITION ELEV TORQUE TUBE STOP	1	
	AN960D10L	• • WASHER	1	
	AN365-1032	• • NUT	1	
		¤----¤-¤-¤----¤		
- 52	25-71125- 3	• • ARM, AMMUNITION ELEVATOR TORQUE TUBE STOP	1	
- 53	25-71124- 3	• • RATCHET, AMMUNITION ELEV TORQUE TUBE STOP	1	
- 54	25-71126- 3	• • SUPPORT, AMMUNITION ELEV TORQUE TUBE STOP	2	
- 55	25-71075- 3	• END, AMMUNITION ELEVATOR TORQUE TUBE RIGHT SIDE ONLY	1	
- 56	25-71079- 3	• TUBE, AMMUNITION ELEVATOR HOIST TORQUE	1	

Armament

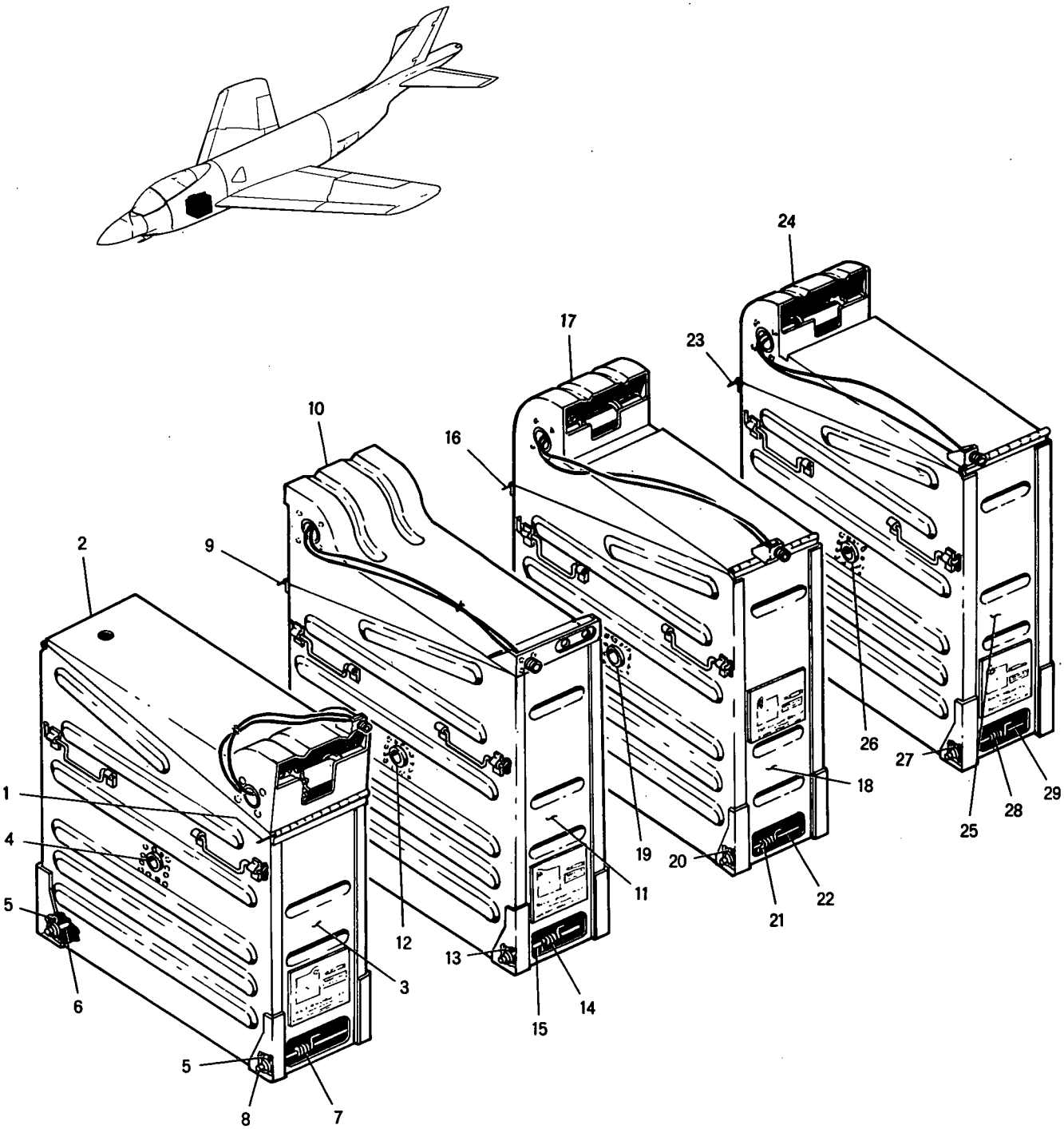

PC25-179

Figure 169 -- Ammunition Box Assemblies

FIGURE & INDEX NUMBER	PART NUMBER	1 2 3 4 5 6 7 DESCRIPTION	UNITS PER ASS'Y	USABLE ON CODE
169 -	25-71145- 1	BOX ASSY, NO. 1 AMMUNITION, SEE FIG. 166-12 FOR NEXT HIGHER ASSY	REF	
- 1	AN253-2-704	• PIN, HINGE	1	
- 2	790051	• HOUSING ASSEMBLY (HUG)	1	
- 3	25-71145- 3	• BOX ASSY, AMMUNITION	1	
- 4	25-71188- 3	• • CLUTCH ASSY, AMMUNITION BOX, SEE FIG. 170	1	A-B
	25-71188-303	• • CLUTCH ASSY, AMMUNITION BOX, SEE FIG. 170	1	C-F
- 5	AN381-3-14	• • PIN, COTTER	4	
	AN960-616	• • WASHER, USE WITH INDEX 5	4	
- 6	25-71131- 3	• • TUBE, AMMUNITION BOX LOCKING	1	
- 7	25-71132- 3	• • SPRING, TORSION AMMUNITION BOX LOCKING	1	
- 8	25-71130- 1	• • ROD ASSEMBLY, AMMUNITION BOX LOCKING	1	
	25-71146- 1	BOX ASSY, NO. 2 AMMUNITION, SEE FIG. 166-13 FOR NEXT HIGHER ASSY	REF	
- 9	AN253-2-704	• PIN, HINGE	1	
- 10	790052	• HOUSING ASSEMBLY (HUG)	1	
- 11	25-71146- 3	• BOX ASSY, AMMUNITION	1	
- 12	25-71188- 1	• • CLUTCH ASSY, AMMUNITION BOX, SEE FIG. 170	1	A-B
	25-71188-301	• • CLUTCH ASSY, AMMUNITION BOX, SEE FIG. 170	1	C-F
- 13	AN381-3-14	• • PIN, COTTER	4	
	AN960-616	• • WASHER	4	
	25-71131- 3	• • TUBE, AMMUNITION BOX LOCKING	1	
- 14	25-71132- 3	• • SPRING, TORSION AMMUNITION BOX LOCKING	1	
- 15	25-71130- 1	• • ROD ASSEMBLY, AMMUNITION BOX LOCKING	1	
	25-71147- 1	BOX ASSY, NO. 3 AMMUNITION, SEE FIG. 166-14 FOR NEXT HIGHER ASSY	REF	
- 16	AN253-2-704	• PIN, HINGE	1	
- 17	790053	• HOUSING ASSEMBLY (HUG)	1	
- 18	25-71147- 3	• BOX ASSY, AMMUNITION	1	
- 19	25-71188- 3	• • CLUTCH ASSY, AMMUNITION BOX, SEE FIG. 170	1	A-B
	25-71188-303	• • CLUTCH ASSY, AMMUNITION BOX, SEE FIG. 170	1	C-F
- 20	AN381-3-14	• • PIN, COTTER	4	
	AN960-616	• • WASHER	4	
	25-71131- 3	• • TUBE, AMMUNITION BOX LOCKING	1	
- 21	25-71132- 3	• • SPRING, TORSION AMMUNITION BOX LOCKING	1	
- 22	25-71130- 1	• • ROD ASSEMBLY, AMMUNITION BOX LOCKING	1	
	25-71148- 1	BOX ASSY, NO. 4 AMMUNITION, SEE FIG. 166-15 FOR NEXT HIGHER ASSY	REF	
- 23	AN253-2-704	• PIN, HINGE	1	
- 24	790054	• HOUSING ASSEMBLY (HUG)	1	
- 25	25-71148- 3	• BOX ASSY, AMMUNITION	1	
- 26	25-71188- 1	• • CLUTCH ASSY, AMMUNITION BOX, SEE FIG. 170	1	A-B
	25-71188-301	• • CLUTCH ASSY, AMMUNITION BOX, SEE FIG. 170	1	C-F
- 27	AN381-3-14	• • PIN, COTTER	4	
	AN960-616	• • WASHER	4	
	25-71131- 3	• • TUBE, AMMUNITION BOX LOCKING	1	
- 28	25-71132- 3	• • SPRING, TORSION AMMUNITION BOX LOCKING	1	
- 29	25-71130- 1	• • ROD ASSEMBLY, AMMUNITION BOX LOCKING	1	

Armament

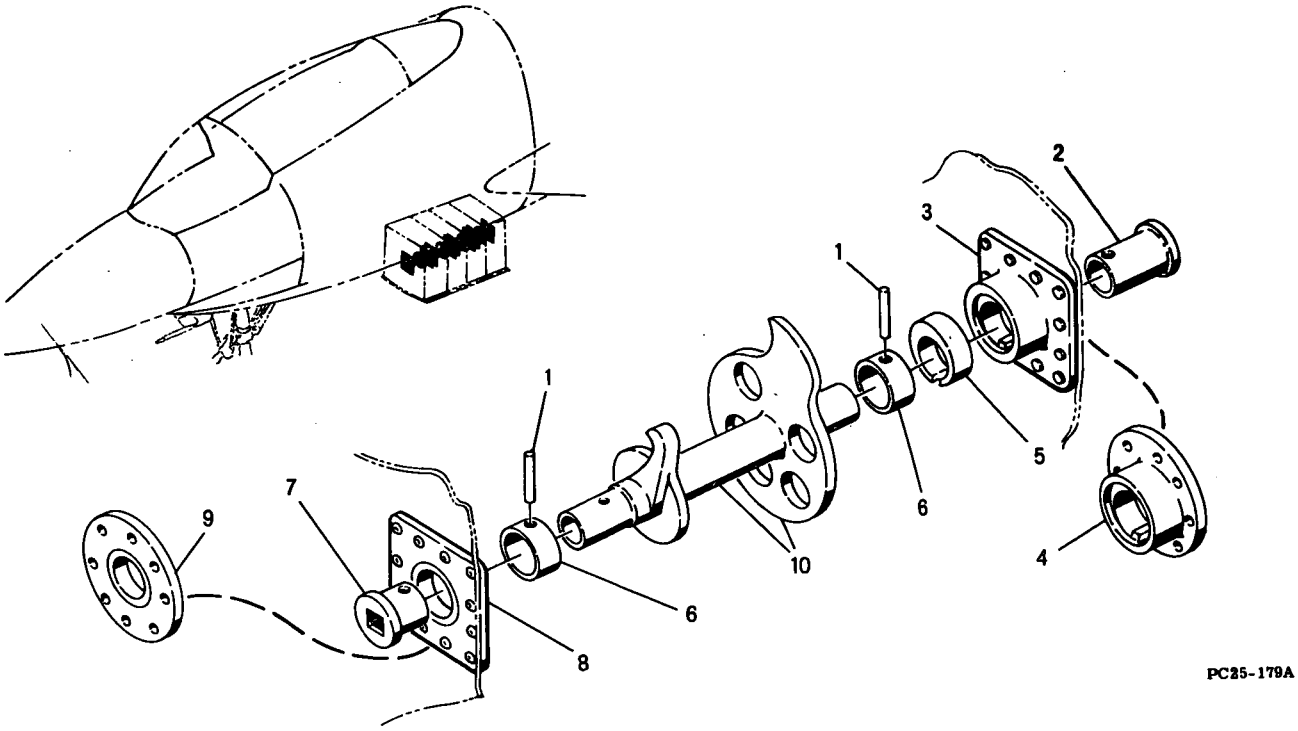

Figure 170 -- Ammunition Box Clutch Assemblies

FIGURE & INDEX NUMBER	PART NUMBER	1 2 3 4 5 6 7 DESCRIPTION	UNITS PER ASS'Y	USABLE ON CODE
170 -	25-71188- 1	CLUTCH ASSY, AMMUNITION BOX, SEE FIG. 169-12 & 169-26 FOR NEXT HIGHER ASSEMBLY	REF	A-B
	25-71188-301	CLUTCH ASSY, AMMUNITION BOX, SEE FIG. 169-12 & 169-26 FOR NEXT HIGHER ASSEMBLY	REF	C-F
	25-71188- 3	CLUTCH ASSY, AMMUNITION BOX, SEE FIG. 169-4 & 169-19 FOR NEXT HIGHER ASSEMBLY	REF	A-B
	25-71188-303	CLUTCH ASSY, AMMUNITION BOX, SEE FIG. 169-4 & 169-19 FOR NEXT HIGHER ASSEMBLY	REF	C-F
- 1	79-040-187-1250	. PIN, ROLL (EN)	2	
- 2	25-71234- 5	. RETAINER, AMMUNITION	1	
- 3	25-71236- 1	. HOUSING ASSEMBLY, AMMUNITION BOX	1	A-B
- 4	25-71236-301	. HOUSING ASSEMBLY, AMMUNITION BOX	1	C-F
	C1001-0250	. . BEARING, COMPOSITION (BB)	1	
- 5	25-71231- 5	. CLUTCH, AMMUNITION BOX	1	
- 6	25-71188- 5	. SPACER	2	
- 7	25-71232- 5	. RETAINER, AMMUNITION BOX SHORT	1	
- 8	25-71235- 1	. HOUSING ASSEMBLY, AMMUNITION BOX	1	A-B
- 9	25-71235-301	. HOUSING ASSEMBLY, AMMUNITION BOX	1	C-F
	CF1001E0312	. . BEARING, COMPOSITION (BB)	1	
- 10	25-71230- 5	. DRUM, AMMUNITION BOX LH	1	
	25-71230- 6	. DRUM, AMMUNITION BOX RH	1	

Armament

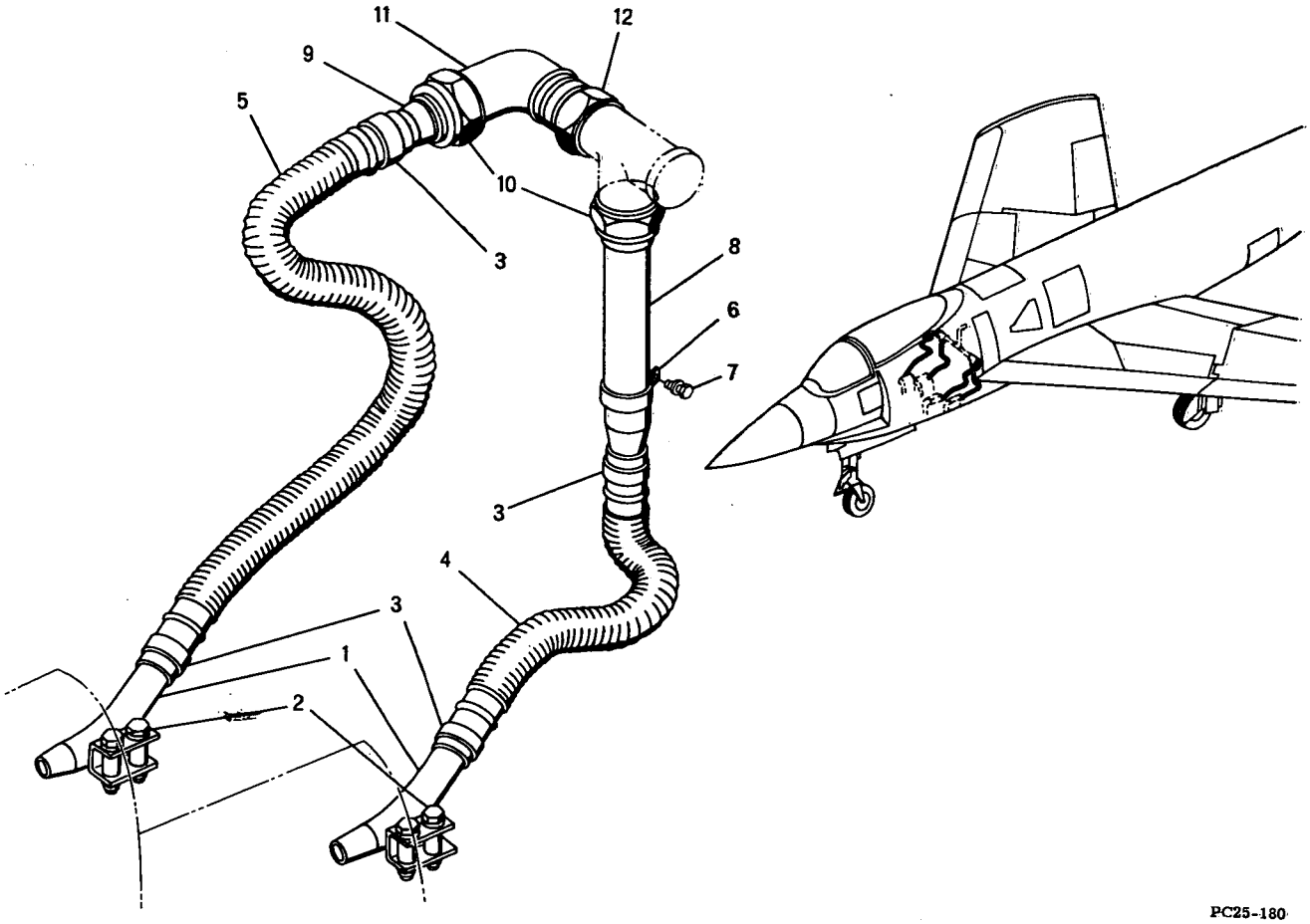

Figure 171 -- Gun Heater Hose Installation

FIGURE & INDEX NUMBER	PART NUMBER	1 2 3 4 5 6 7 DESCRIPTION	UNITS PER ASS'Y	USABLE ON CODE
171 -	25-71072- 1	HOSE INSTL, GUN HEATER LH, SEE FIG. 166-10 FOR NEXT HIGHER ASSY	REF	
	25-71072- 2	HOSE INSTL, GUN HEATER RH, SEE FIG. 166-11 FOR NEXT HIGHER ASSY	REF	
- 1	25-71053- 2	• NOZZLE ASSEMBLY, GUN HEATER RH	2	
	25-71053- 1	• NOZZLE ASSEMBLY, GUN HEATER LH	2	
		ATTACHING PARTS		
- 2	AN3-15A	• BOLT	4	
	NAS43DD3-64	• SPACER	4	
	AN960D10	• WASHER	4	
	AN365-1032	• NUT	4	
		¤----¤-¤-¤----¤		
- 3	AN737-34	• CLAMP	4	
- 4	25-71156- 3	• HOSE, GUN HEATER FLEXIBLE	1	
- 5	25-71156- 5	• HOSE, GUN HEATER FLEXIBLE	1	
- 6	AN742D18C	• CLAMP	1	
		ATTACHING PARTS		
- 7	AN3-5A	• BOLT	1	
	AN960D10	• WASHER	1	
		¤----¤-¤-¤----¤		
- 8	25-71054- 3	• TUBE, GUN HEATER REDUCER	1	
- 9	25-71054- 5	• TUBE, GUN HEATER FLEXIBLE	1	
- 10	AN818-16D	• NUT	2	
	AN819-16D	• SLEEVE, COUPLING, USE WITH INDEX 10	2	
- 11	AN833-16D	• ELBOW	1	
- 12	AN924-16D	• NUT	1	
	AN6290-16	• GASKET, USE WITH INDEX 12	1	

Armament

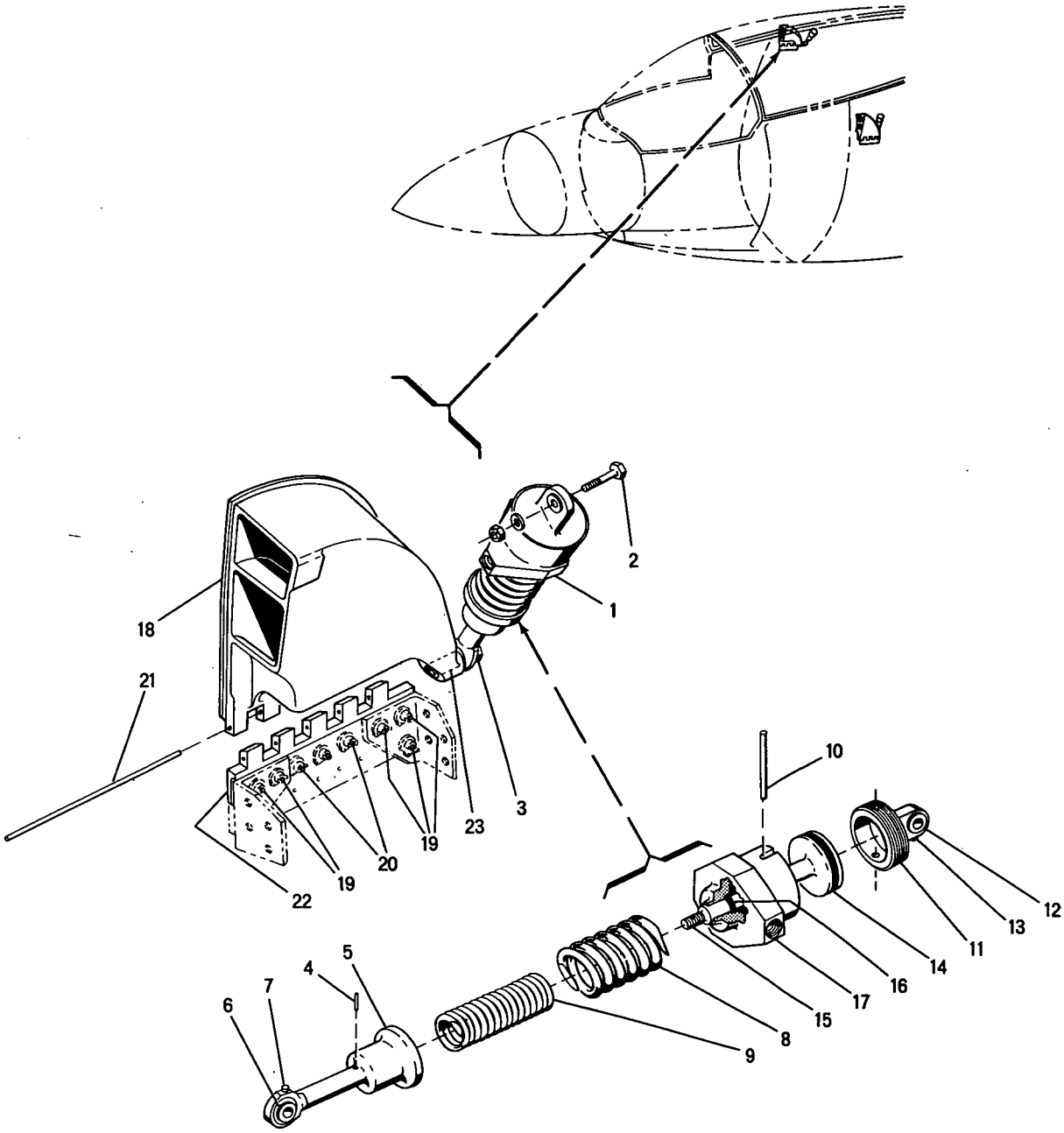

PC25-181

Figure 172 - Gun Compartment Vent Installation

FIGURE & INDEX NUMBER	PART NUMBER	1 2 3 4 5 6 7 DESCRIPTION	UNITS PER ASS'Y	USABLE ON CODE
172 -	25-71182- 1	VENT INSTALLATION, GUN COMPARTMENT LH, SEE FIG. 166-1 FOR NEXT HIGHER ASSEMBLY	REF	
	25-71182- 2	VENT INSTALLATION, GUN COMPARTMENT RH, SEE FIG. 166-2 FOR NEXT HIGHER ASSEMBLY	REF	
- 1	25-72018- 1	. ACTUATOR ASSY, GUN BAY LOUVRE DOOR	1	
		ATTACHING PARTS		
- 2	AN4-7A	. BOLT	1	
	AN960A416L	. WASHER	1	
	AN365-428	. NUT	1	
- 3	25-71193- 3	. BOLT, VENT INSTL GUN COMPARTMENT	1	
	4M36-02014	. WASHER (MDA)	1	
		¤----¤-¤-¤----¤		
- 4	79-014-062-0500	. . PIN, ROLL (EN)	1	
- 5	25-69240- 1	. . END ASSY, GUN BAY LOUVRE DOOR ACTUATOR	1	
- 6	BLN4003G-C	. . . BEARING (SWPC)	1	
- 7	NAS497	. . . FITTING, LUB	1	
- 8	25-69242- 3	. . SPRING, GUN BAY LOUVRE DOOR ACTUATOR COMPRESSION	1	
- 9	25-69243- 3	. . SPRING, GUN BAY LOUVRE DOOR ACTUATOR COMPRESSION	1	
- 10	79-032-156-2000	. . PIN, ROLL (EN)	1	
- 11	25-69237- 1	. . CAP ASSY, GUN BAY LOUVRE DOOR ACTUATOR	1	
- 12	BLR4000G-C	. . . BEARING (SWPC)	1	
- 13	NAS497	. . . FITTING, LUB	2	
- 14	AN6227B25	. . PACKING, O RING	1	
- 15	25-69239- 5	. . PISTON, GUN BAY LOUVRE DOOR ACTUATOR	1	
- 16	AN6227B7	. . PACKING, O RING	1	
- 17	25-69238- 3	. . BARREL, GUN BAY LOUVRE DOOR ACTUATOR	1	
- 18	25-71073- 2	. INLET ASSEMBLY, GUN GAS AIR RH	1	
	25-71073- 1	. INLET ASSEMBLY, GUN GAS AIR LH	1	
		ATTACHING PARTS		
- 19	AN509-10R13	. SCREW	6	
- 20	AN509-10R10	. SCREW	3	
		¤----¤-¤-¤----¤		
- 21	AN253-5-546	. . PIN, HINGE	1	
- 22	25-71151- 3	. . HINGE, AIR INLET, RIGHT SIDE	1	
	25-71151- 4	. . HINGE, AIR INLET, LEFT SIDE	1	
- 23	RL28SB8	. . RING, LOCK (ROSN)	1	
	R206SB12L	. . INSERT (ROSN) USE WITH INDEX 23	1	

Armament

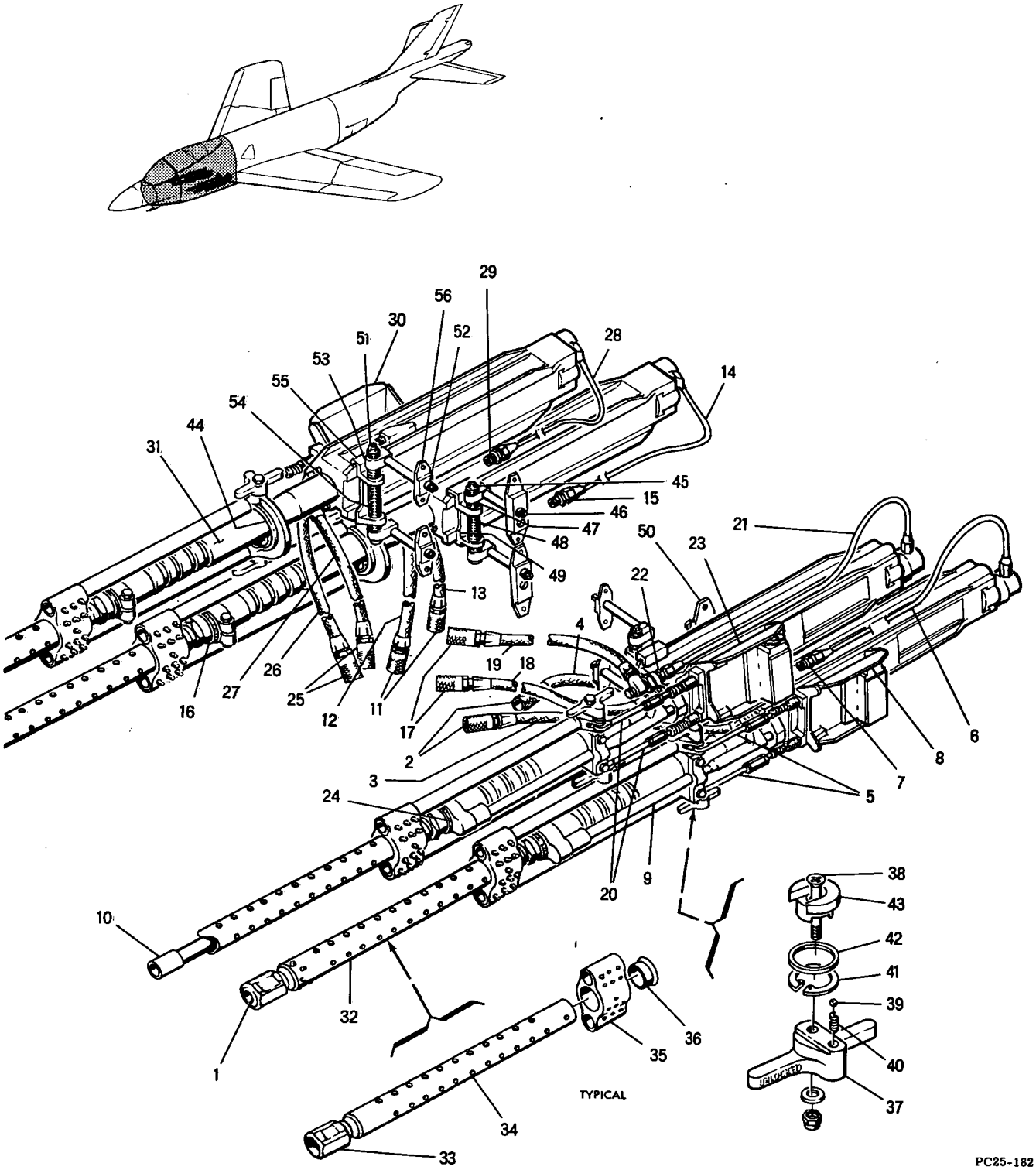

Figure 173 -- MK 12 MOD 0 20 MM Guns and Front and Rear Mount Assemblies

FIGURE & INDEX NUMBER	PART NUMBER	1 2 3 4 5 6 7 DESCRIPTION	UNITS PER ASS'Y	USABLE ON CODE
173 -	25-71002- 1	GUN ASSY, MK 12 MOD 0 20MM LOWER LH, SEE FIG. 166-3 FOR NEXT HIGHER ASSEMBLY	REF	
- 1	25-71218- 3	. CAP, GUN BARREL THREAD PROTECTOR	1	
- 2	59000-6	. RECEPTACLE (ESSX) GUN HOSE	2	
- 3	MS28741-4-0310	. HOSE ASSY, GUN READY	1	
- 4	MS28741-4-0320	. HOSE ASSY, GUN CHARGING	1	
- 5	25-71209- 3	. LINK, FEEDER ANCHOR ROD	2	
- 6	25-72056-3	. TUBE ASSY, GUN READY TO GUN BUFFER	1	
- 7	AN815-4	. UNION	1	
	AN6290-4	. GASKET, USE WITH INDEX 7	1	
- 8	NO NUMBER	. MECHANISM, MK 7 MOD 0, RH FEED, LEFT SIDE, GFP	1	
- 9	NO NUMBER	. GUN, MK 12 MOD 0 20MM, LESS BUO-736998, GFP	1	
	25-71002- 2	GUN ASSY, MK 12 MOD 0 20MM LOWER RH, SEE FIG. 166-4 FOR NEXT HIGHER ASSEMBLY	REF	
- 10	25-71218- 3	. CAP, GUN BARREL THREAD PROTECTOR	1	
- 11	59000-6	. RECEPTACLE (ESSX) GUN HOSE	2	
- 12	MS28741-4-0324	. HOSE ASSY, GUN READY	1	
- 13	MS28741-4-0324	. HOSE ASSY, GUN CHARGING	1	
	25-71209- 3	. LINK, FEEDER ANCHOR ROD	2	
- 14	25-72056- 3	. TUBE ASSY, GUN READY TO GUN BUFFER	1	
- 15	AN815-4	. UNION	1	
	AN6290-4	. GASKET, USE WITH INDEX 15	1	
	NO NUMBER	. MECHANISM, MK 7 MOD 0, LH FEED, RIGHT SIDE, GFP	1	
- 16	NO NUMBER	. GUN, MK 12 MOD 0 20MM, LESS BUO-736998, GFP	1	
	25-71002- 3	GUN ASSY, MK 12 MOD 0 20MM UPPER LH, SEE FIG. 166-5 FOR NEXT HIGHER ASSEMBLY	REF	
	25-71218- 3	. CAP, GUN BARREL THREAD PROTECTOR	1	
- 17	59000-6	. RECEPTACLE (ESSX) GUN HOSE	2	
- 18	MS28741-4-0220	. HOSE ASSY, GUN READY	1	
- 19	MS28741-4-0200	. HOSE ASSY, GUN CHARGING	1	
- 20	25-71209- 3	. LINK, FEEDER ANCHOR ROD	2	
- 21	25-72056- 3	. TUBE ASSY, GUN READY TO GUN BUFFER	1	
- 22	AN815-4	. UNION	1	
	AN6290-4	. GASKET, USE WITH INDEX 22	1	
- 23	NO NUMBER	. MECHANISM, MK 7 MOD 0, RH FEED, LEFT SIDE, GFP	1	
- 24	NO NUMBER	. GUN, MK 12 MOD 0 20MM, LESS BUO-736998, GFP	1	
	25-71002- 4	GUN ASSY, MK 12 MOD 0 20MM UPPER RH, SEE FIG. 166-6 FOR NEXT HIGHER ASSEMBLY	REF	
	25-71218- 3	. CAP, GUN BARREL THREAD PROTECTOR	1	
- 25	59000-6	. RECEPTACLE (ESSX) GUN HOSE	2	
- 26	MS28741-4-0230	. HOSE ASSY, GUN READY	1	
- 27	MS28741-4-0220	. HOSE ASSY, GUN CHARGING	1	
	25-71209- 3	. LINK, FEEDER ANCHOR ROD	2	
- 28	25-72056- 3	. TUBE ASSY, GUN READY TO GUN BUFFER	1	
- 29	AN815-4	. UNION	1	
	AN6290-4	. GASKET, USE WITH INDEX 29	1	
- 30	NO NUMBER	. MECHANISM, MK 7 MOD 0, LH FEED, RIGHT SIDE, GFP	1	
- 31	NO NUMBER	. GUN, MK 12 MOD 0 20MM, LESS BUO-736998, GFP	1	
	25-71049- 1	MOUNT ASSEMBLY, GUN FRONT, SEE FIG. 166-7 FOR NEXT HIGHER ASSY	REF	
- 32	25-71052- 1	. TUBE ASSY, BALL	1	
- 33	25-71029- 5	. . FITTING, GUN FRONT MOUNT BALL	1	
- 34	25-71034- 3	. . TUBE, GUN FRONT MOUNT BALL	1	
- 35	25-71028- 3	. FITTING, GUN FRONT MOUNT	1	
- 36	25-71033- 3	. GUIDE, GUN FRONT MOUNT	1	
- 37	25-71051- 3	. ARM, GUN FRONT TRUNNION LOCK	2	
		ATTACHING PARTS		
- 38	AN509-10R28	. SCREW	2	
	AN960D10	. WASHER	2	
	AN364-1032	. NUT	2	
		¤----¤-¤-¤----¤		
- 39	COMM	. BALL, STAINLESS STEEL 3/16 DIAMETER	2	
- 40	23-71182- 3	. SPRING, GUN YOKE BALL RETAINING COMPRESSION	2	
- 41	NAS50-137	. RING, INTERNAL RETAINER	2	
- 42	25-71021- 3	. WASHER, GUN FRONT TRUNNION RETAINING	2	
- 43	25-71050- 5	. BUSHING, GUN FRONT TRUNNION LOCK	2	
- 44	25-71027- 5	. YOKE, GUN FRONT TRUNNION	1	
	25-71030- 1	MOUNT ASSY, LOWER LEFT GUN REAR, SEE FIG. 166-8 FOR NEXT HIGHER ASSEMBLY	REF	
	25-71030- 2	MOUNT ASSY, LOWER RIGHT UN REAR, SEE FIG. 166-8 FOR NEXT HIGHER ASSEMBLY	REF	
- 45	E8080	. NUT (EN)	1	
	AN960-816	. WASHER	1	
- 46	25-71032- 3	. SCREW, GUN REAR MOUNT AZIMUTH ADJUSTING	2	
- 47	25-71025- 3	. POST, GUN REAR MOUNT	2	
- 48	25-71031- 3	. SCREW, GUN REAR MOUNT ELEVATOR ADJUSTING	1	

FIGURE & INDEX NUMBER	PART NUMBER	1 2 3 4 5 6 7 DESCRIPTION	UNITS PER ASS'Y	USABLE ON CODE
173 - 49	25-71024- 4	• HOUSING, LOWER GUN REAR SLIDE RH	1	
	25-71024- 3	• HOUSING, LOWER GUN REAR SLIDE LH	1	
- 50	25-71023- 3	• FITTING, LOWER GUN REAR MOUNT SCREW RETAINER	2	
	25-71030- 3	MOUNT ASSY, UPPER LEFT GUN REAR, SEE FIG. 166-9 FOR NEXT HIGHER ASSEMBLY	REF	
	25-71030- 4	MOUNT ASSY, UPPER RIGHT GUN REAR, SEE FIG. 166-9 FOR NEXT HIGHER ASSEMBLY	REF	
- 51	EB080	• NUT (EN)	1	
	AN960-816	• WASHER	1	
- 52	25-71032- 3	• SCREW, GUN REAR MOUNT AZIMUTH ADJUSTING	2	
- 53	25-71025- 3	• POST, GUN REAR MOUNT	2	
- 54	25-71031- 3	• SCREW, GUN REAR MOUNT ELEVATOR ADJUSTING	1	
- 55	25-71022- 4	• HOUSING, UPPER RIGHT GUN REAR SLIDE	1	
	25-71022- 3	• HOUSING, UPPER LEFT GUN REAR SLIDE	1	
- 56	25-71026- 3	• FITTING, UPPER GUN REAR MOUNT SCREW RETAINER	2	

FIGURE & INDEX NUMBER	PART NUMBER	1 2 3 4 5 6 7 DESCRIPTION	UNITS PER ASS'Y	USABLE ON CODE
174 -	25-91003- 1	PYLON INSTALLATION, GENERAL PURPOSE LH, SEE FIG. 165-2 FOR NEXT HIGHER ASSEMBLY	REF	A-C
	25-91003-301	PYLON INSTALLATION, GENERAL PURPOSE LH, SEE FIG. 165-2 FOR NEXT HIGHER ASSEMBLY	REF	D-F
	25-91003- 2	PYLON INSTALLATION, GENERAL PURPOSE RH, SEE FIG. 165-3 FOR NEXT HIGHER ASSEMBLY	REF	A-C
	25-91003-302	PYLON INSTALLATION, GENERAL PURPOSE RH, SEE FIG. 165-3 FOR NEXT HIGHER ASSEMBLY	REF	D-F
	25-91004- 1	• PYLON ASSEMBLY, GENERAL STORES AFT LH, FOR FUTURE PROCUREMENT USE 25-91004-301	1	A-C
	25-91004-301	• PYLON ASSEMBLY, GENERAL STORES AFT LH, USE FOR FUTURE PROCUREMENT TO REPLACE 25-91004-1	1	
	25-91004- 2	• PYLON ASSEMBLY, GENERAL STORES AFT RH, FOR FUTURE PROCUREMENT USE 25-91004-302	1	A-C
	25-91004-302	• PYLON ASSEMBLY, GENERAL STORES AFT RH, USE FOR FUTURE PROCUREMENT TO REPLACE 25-91004-2	1	
		ATTACHING PARTS		
- 1	AN509-10R10	• SCREW, LEFT SIDE	2	
	AN509-10R10	• SCREW, RIGHT SIDE	4	
- 2	AN23-12	• BOLT	1	
	AN960-10L	• WASHER	2	
	AN310-3	• NUT	1	
	AN380-2-3	• PIN, COTTER	1	
- 3	NAS145-37	• BOLT	1	
	NAS143-5C	• WASHER	1	
- 4	25-91072- 3	• BOLT, PYLON TO FUSELAGE ATTACHMENT	8	
	NAS143-9C	• WASHER	8	
		¤----¤-¤-¤----¤		
- 5	NO NUMBER	• • RACK, BOMB, MK 51 MOD 14, 49A233H1 (BUA) GFP, FURNISHED WITH AERO 1A ADAPTERS, ALTERNATE AERO 62A, SK7414.2J1452 (BUA) GFP	1	
- 6	NO NUMBER	• • RACK, BOMB, AERO 62A, SK7414.2J1452 (BUA) GFP, ALTERNATE MK 51 MOD 14, 49A233H1 (BUA) GFP	1	
		ATTACHING PARTS		
- 7	NAS464P8A24	• • BOLT	4	
	AN960D816L	• • WASHER	4	
	AN960D816	• • WASHER	4	
	AN364-820	• • NUT	4	
		¤----¤-¤-¤----¤		
- 8	25-91005- 1	• • NOSE ASSEMBLY, GENERAL STORES AFT PYLON LH, SEE FIG. 175	1	25-91004-1
	25-91005-301	• • NOSE ASSEMBLY, GENERAL STORES AFT PYLON LH, SEE FIG. 175	1	25-91004-301
	25-91005- 2	• • NOSE ASSEMBLY, GENERAL STORES AFT PYLON RH, SEE FIG. 175	1	25-91004-2
	25-91005-302	• • NOSE ASSEMBLY, GENERAL STORES AFT PYLON RH, SEE FIG. 175	1	25-91004-302
		ATTACHING PARTS		
- 9	AN4H6A	• • BOLT	1	
	AN960D416L	• • WASHER	1	
- 10	AN4-7A	• • BOLT	1	
	AN960D416	• • WASHER	2	
- 11	AN4-11A	• • BOLT	1	
	AN960D416	• • WASHER	3	
		¤----¤-¤-¤----¤		
- 12	25-91007- 1	• • TAIL ASSEMBLY, GENERAL STORES AFT PYLON LH, SEE FIG. 176	1	25-91004-1
	25-91007-301	• • TAIL ASSEMBLY, GENERAL STORES AFT PYLON LH, SEE FIG. 176	1	25-91004-301
	25-91007- 2	• • TAIL ASSEMBLY, GENERAL STORES AFT PYLON RH, SEE FIG. 176	1	25-91004-2
	25-91007-302	• • TAIL ASSEMBLY, GENERAL STORES AFT PYLON RH, SEE FIG. 176	1	25-91004-302
		ATTACHING PARTS		
- 13	AN4-17A	• • BOLT	2	
	AN960D416	• • WASHER	4	
	AN365-428	• • NUT	2	
- 14	AN43-17A	• • BOLT	1	
	AN960D416	• • WASHER	2	
	AN365-428	• • NUT	1	
		¤----¤-¤-¤----¤		

Armament

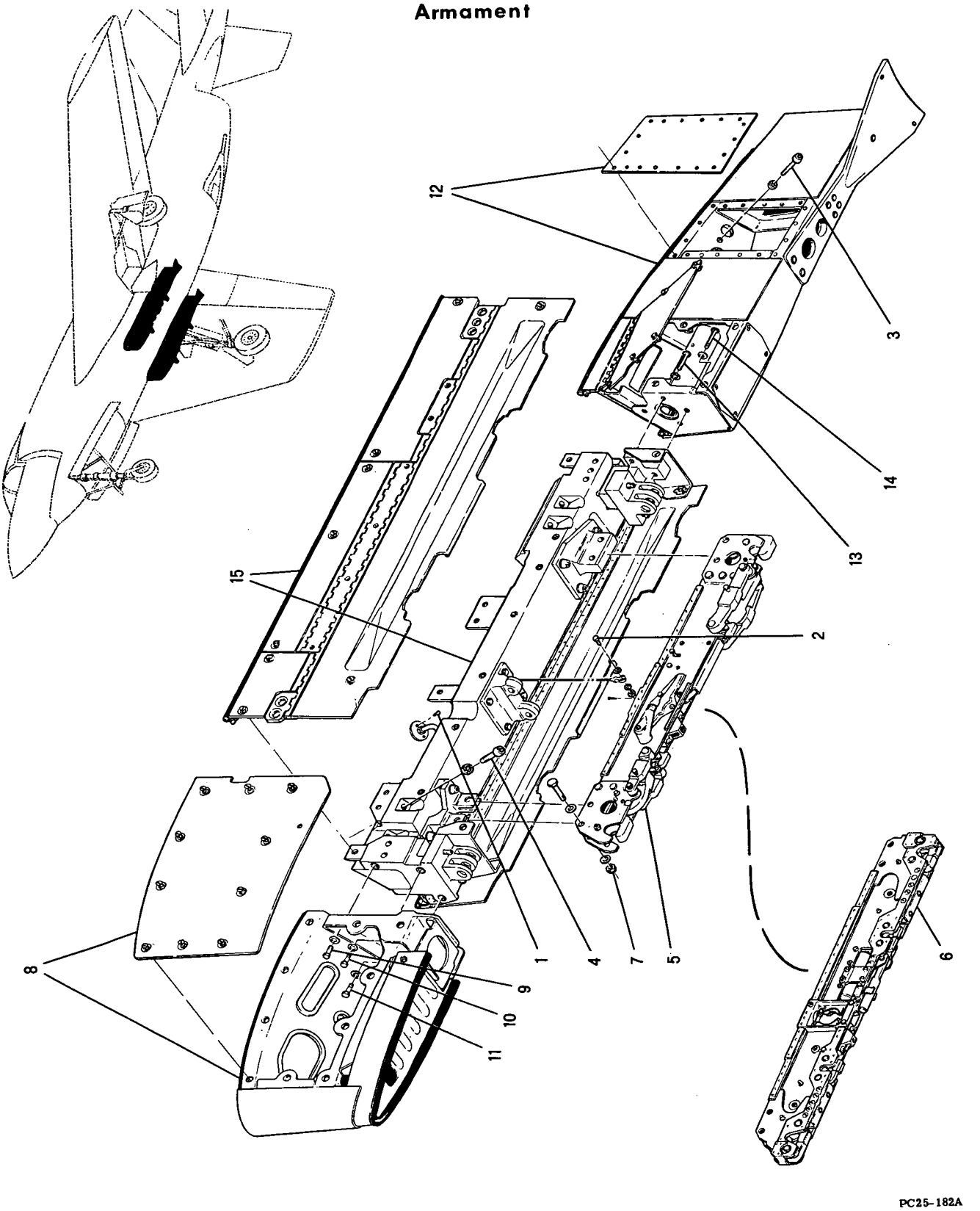

Figure 174 -- General Purpose Pylon Installation

FIGURE & INDEX NUMBER	PART NUMBER	1 2 3 4 5 6 7 DESCRIPTION	UNITS PER ASS'Y	USABLE ON CODE
174 - 15	25-91008- 1	• • CENTER SECTION ASSEMBLY, GENERAL STORES AFT PYLON LH, SEE FIG. 177	1	25-91004-1
	25-91008-301	• • CENTER SECTION ASSEMBLY, GENERAL STORES AFT PYLON LH, SEE FIG. 177	1	25-91004-301
	25-91008- 2	• • CENTER SECTION ASSEMBLY, GENERAL STORES AFT PYLON RH, SEE FIG. 177	1	25-91004-2
	25-91008-302	• • CENTER SECTION ASSEMBLY, GENERAL STORES AFT PYLON RH, SEE FIG. 177	1	25-91004-302

Armament

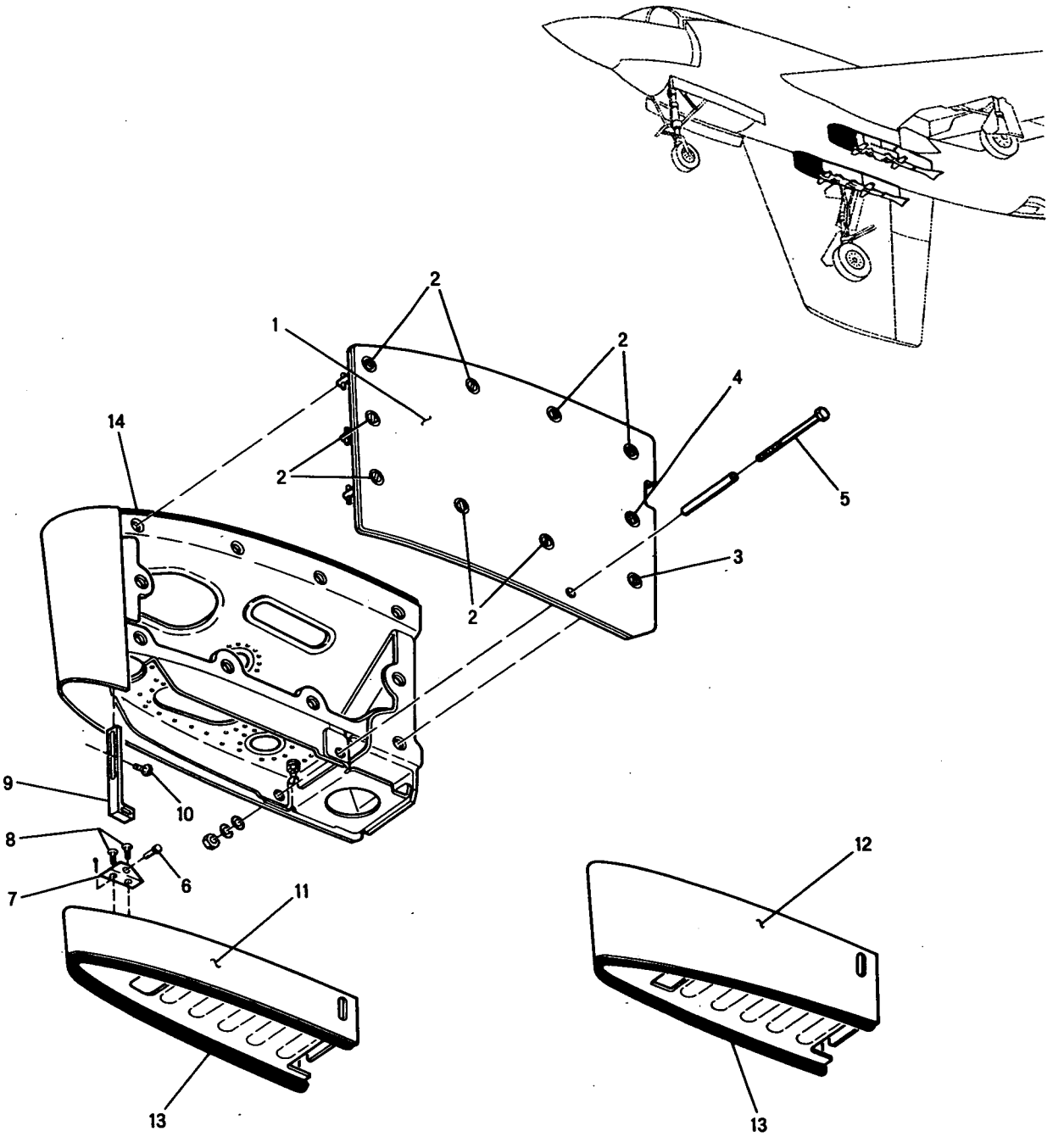

Figure 175 -- General Stores Aft Pylon Nose Assembly

FIGURE & INDEX NUMBER	PART NUMBER	1 2 3 4 5 6 7 DESCRIPTION	UNITS PER ASS'Y	USABLE ON CODE
175 -	25-91005- 1	NOSE ASSEMBLY, GENERAL STORES AFT PYLON LH, SEE FIG. 174-8 FOR NEXT HIGHER ASSEMBLY	REF	25-91004-1
	25-91005-301	NOSE ASSEMBLY, GENERAL STORES AFT PYLON LH, SEE FIG. 174-8 FOR NEXT HIGHER ASSEMBLY	REF	25-91004-301
	25-91005- 2	NOSE ASSEMBLY, GENERAL STORES AFT PYLON RH, SEE FIG. 174-8 FOR NEXT HIGHER ASSEMBLY	REF	25-91004-2
	25-91005-302	NOSE ASSEMBLY, GENERAL STORES AFT PYLON RH, SEE FIG. 174-8 FOR NEXT HIGHER ASSEMBLY	REF	25-91004-302
- 1	25-91005- 75	• DOOR LH	1	
	25-91005- 76	• DOOR RH	1	
- 2	9M68B365-390 #	• BUSHING ASSEMBLY (MDA) USE WITH 9M73-1-051, 9M73-1-064 SPACERS (MDA) & 99947P.130 RECEPTACLE (MKL)	8	
	9M70B2	• WASHER (MDA)	8	
	9M61B1	• RING, WASHER RETAINER (MDA)	8	
- 3	9M68B495-520 #	• BUSHING ASSEMBLY (MDA) USE WITH 9M73-1-040 SPACER (MDA) & 99947P.130 RECEPTACLE (MKL)	1	
	9M70B2	• WASHER (MDA)	1	
	9M61B1	• RING, WASHER RETAINER (MDA)	1	
- 4	9M68B365-390 #	• BUSHING ASSEMBLY (MDA) USE WITH 9M73-1-040 SPACER (MDA) & 99947P.130 RECEPTACLE (MKL)	1	
	9M70B2	• WASHER (MDA)	1	
	9M61B1	• RING, WASHER RETAINER (MDA)	1	
- 5	AN4-46A	• BOLT	1	
	AN960D416	• WASHER	1	
	AN960D416L	• WASHER	1	
	AN364-428	• NUT	1	
- 6	AN393-25	• PIN, FLAT HEAD	1	
	AN381-2-1	• PIN, COTTER, USE WITH INDEX 6	1	
- 7	25-91043- 3	• CLIP, PYLON NOSE SEAL ADJUSTMENT	1	
		ATTACHING PARTS		
- 8	AN509-10R8	• SCREW	2	
		¤----¤-¤-¤----¤		
- 9	25-91042- 3	• FITTING, PYLON NOSE SEAL ADJUSTMENT	1	
		ATTACHING PARTS		
- 10	AN3-5A	• BOLT	1	
	AN960D10L	• WASHER	1	
		¤----¤-¤-¤----¤		
- 11	25-91005- 3	• SEAL ASSEMBLY LH	1	
	25-91005- 4	• SEAL ASSEMBLY RH	1	
- 12	25-91005- 5	• SEAL ASSEMBLY LH	1	
	25-91005- 6	• SEAL ASSEMBLY RH	1	
- 13	25-91005- 49	• • SEAL, SELECTED FROM 11M609 (MDA)	1	
- 14	25-91005- 35	• SEAL, SELECTED FROM 11M609 (MDA)	1	
	25-91005- 36	• SEAL, SELECTED FROM 11M609 (MDA)	1	

SEE AN 01-245FC-3 FOR METHOD OF REPLACEMENT.

Armament

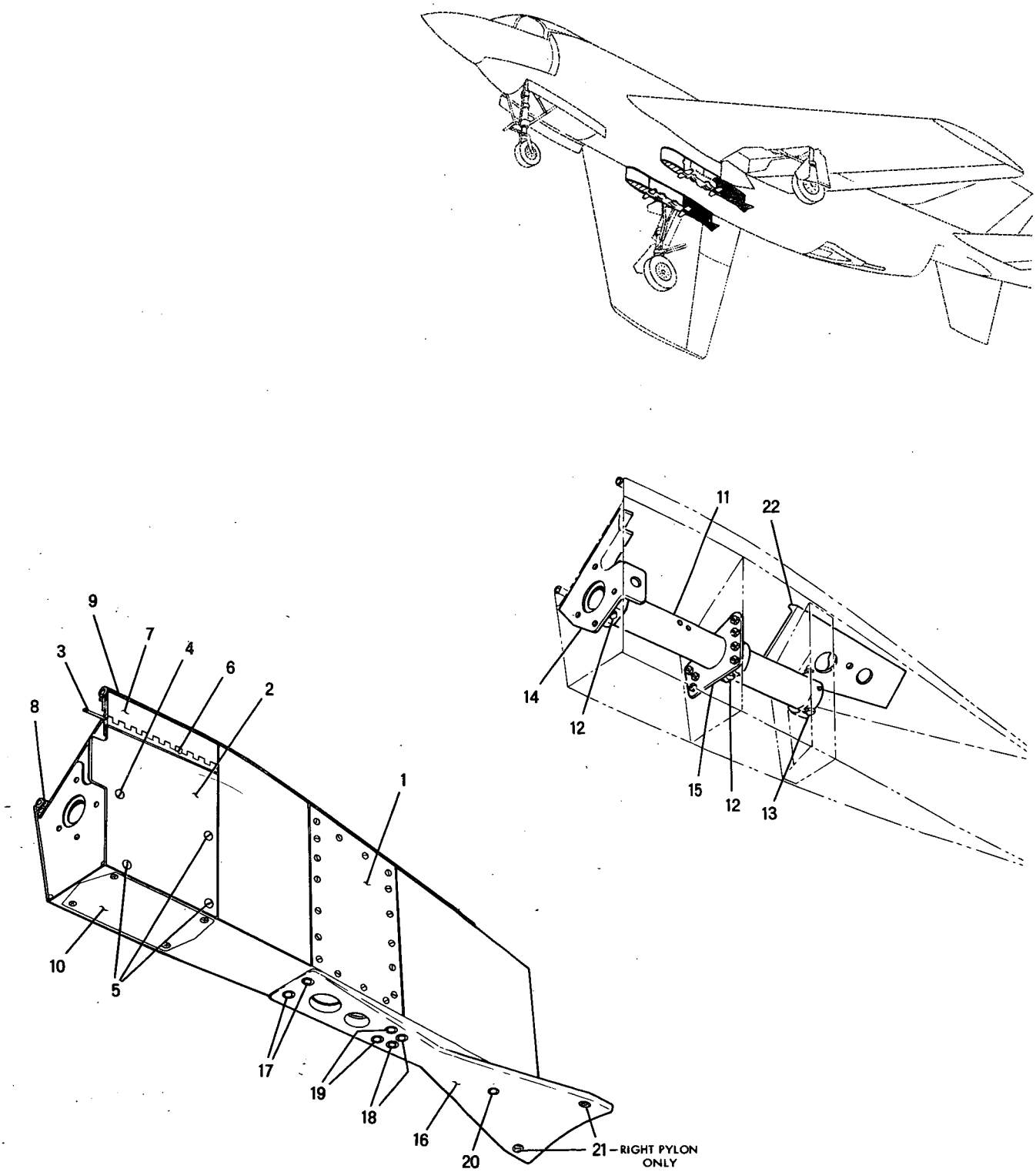

PC25-183A

Figure 176 -- General Stores Aft Pylon Tail Assembly

FIGURE & INDEX NUMBER	PART NUMBER	1 2 3 4 5 6 7 DESCRIPTION	UNITS PER ASS'Y	USABLE ON CODE
176 -	25-91007- 1	TAIL ASSEMBLY, GENERAL STORES AFT PYLON LH, SEE FIG. 174-12 FOR NEXT HIGHER ASSEMBLY	REF	25-91004-1
	25-91007-301	TAIL ASSEMBLY, GENERAL STORES AFT PYLON LH, SEE FIG. 174-12 FOR NEXT HIGHER ASSEMBLY	REF	25-91004-301
	25-91007- 2	TAIL ASSEMBLY, GENERAL STORES AFT PYLON RH, SEE FIG. 174-12 FOR NEXT HIGHER ASSEMBLY	REF	25-91004-2
	25-91007-302	TAIL ASSEMBLY, GENERAL STORES AFT PYLON RH, SEE FIG. 174-12 FOR NEXT HIGHER ASSEMBLY	REF	25-91004-302
- 1	25-91007- 11	. DOOR LH	1	
	25-91007- 12	. DOOR RH	1	
		ATTACHING PARTS		
	AN509-10R10	. SCREW	18	
		¤----¤-¤-¤----¤		
- 2	25-91007- 9	. DOOR LH	1	
	25-91007- 10	. DOOR RH	1	
		ATTACHING PARTS		
- 3	AN253-2-783	. PIN, HINGE	1	
		¤----¤-¤-¤----¤		
- 4	98265-3-.340	. STUD (MKL) USE WITH 99947P.130 RECEPTACLE (MKL)	1	
	99836	. PIN, CROSS (MKL)	1	
- 5	98265-1-.130	. STUD (MKL) USE WITH 99947P.130 RECEPTACLE (MKL)	3	
	99836	. PIN, CROSS (MKL)	3	
- 6	25-91007- 29	. HINGE, HALF, ALTERED FROM 9M57HX3A796 (MDA)	1	
- 7	25-91007- 31	. HINGE, HALF, ALTERED FROM 9M47-12ATT796 (MDA) LEFT SIDE	1	
	25-91007- 32	. HINGE, HALF, ALTERED FROM 9M47-12ATT796 (MDA) RIGHT SIDE	1	
- 8	25-91007- 21	. SEAL, SELECTED FROM 11M609 (MDA)	1	
- 9	25-91007- 23	. SEAL, SELECTED FROM 11M609 (MDA)	1	
- 10	25-91007- 37	. DOOR, RIGHT SIDE ONLY	1	
		ATTACHING PARTS		
	AN509-10R8	. SCREW	4	
		¤----¤-¤-¤----¤		
- 11	25-91103- 3	. TUBE, AFT PYLON TAIL SUPPORT LEFT SIDE	1	
	25-91103- 4	. TUBE, AFT PYLON TAIL SUPPORT RIGHT SIDE	1	
		ATTACHING PARTS		
- 12	NAS464P5A45	. BOLT	2	
	AN960D516L	. WASHER	2	
	AN960D516	. WASHER	4	
	AN364-524	. NUT	2	
- 13	NAS464P5A41	. BOLT	1	
	AN960D516L	. WASHER	1	
	AN960D516	. WASHER	2	
	AN364-524	. NUT	1	
		¤----¤-¤-¤----¤		
- 14	25-91104-1	. FITTING ASSEMBLY, AFT PYLON TAIL TUBE SUP. LH	1	
	25-91104-2	. FITTING ASSEMBLY, AFT PYLON TAIL TUBE SUP. RH	1	
- 15	25-91105-3	. FITTING ASSEMBLY, AFT PYLON TAIL TUBE SUP. LH	1	
	25-91105-4	. FITTING ASSEMBLY, AFT PYLON TAIL TUBE SUP. RH	1	
		ATTACHING PARTS		
	AN3-6A	. BOLT	7	
	AN960D10L	. WASHER	7	
	AN960D10	. WASHER	14	
	AN365-1032	. NUT	7	
		¤----¤-¤-¤----¤		
- 16	25-91097- 3	. BUMPER ASSEMBLY, AFT PYLON TAIL LH	1	
	25-91097- 2	. BUMPER ASSEMBLY, AFT PYLON TAIL RH	1	
		ATTACHING PARTS		
- 17	AN3-6A	. BOLT	2	
	AN960D10L	. WASHER	2	
- 18	AN4-13A	. BOLT	2	
	AN960D416L	. WASHER	2	
- 19	AN4-13A	. BOLT	2	
	AN960D416L	. WASHER	2	
	AN960D416	. WASHER	2	
	AN365-428	. NUT	2	
- 20	AN3-23A	. BOLT	1	
	AN960D10L	. WASHER	1	
		¤----¤-¤-¤----¤		
- 21	1191-5CN5/16	. . INSERT (AF) RIGHT SIDE ONLY	2	
- 22	25-91098- 3	. FITTING, AFT PYLON ATTACHMENT TAIL LH	1	
	25-91098- 4	. FITTING, AFT PYLON ATTACHMENT TAIL RH	1	

Armament

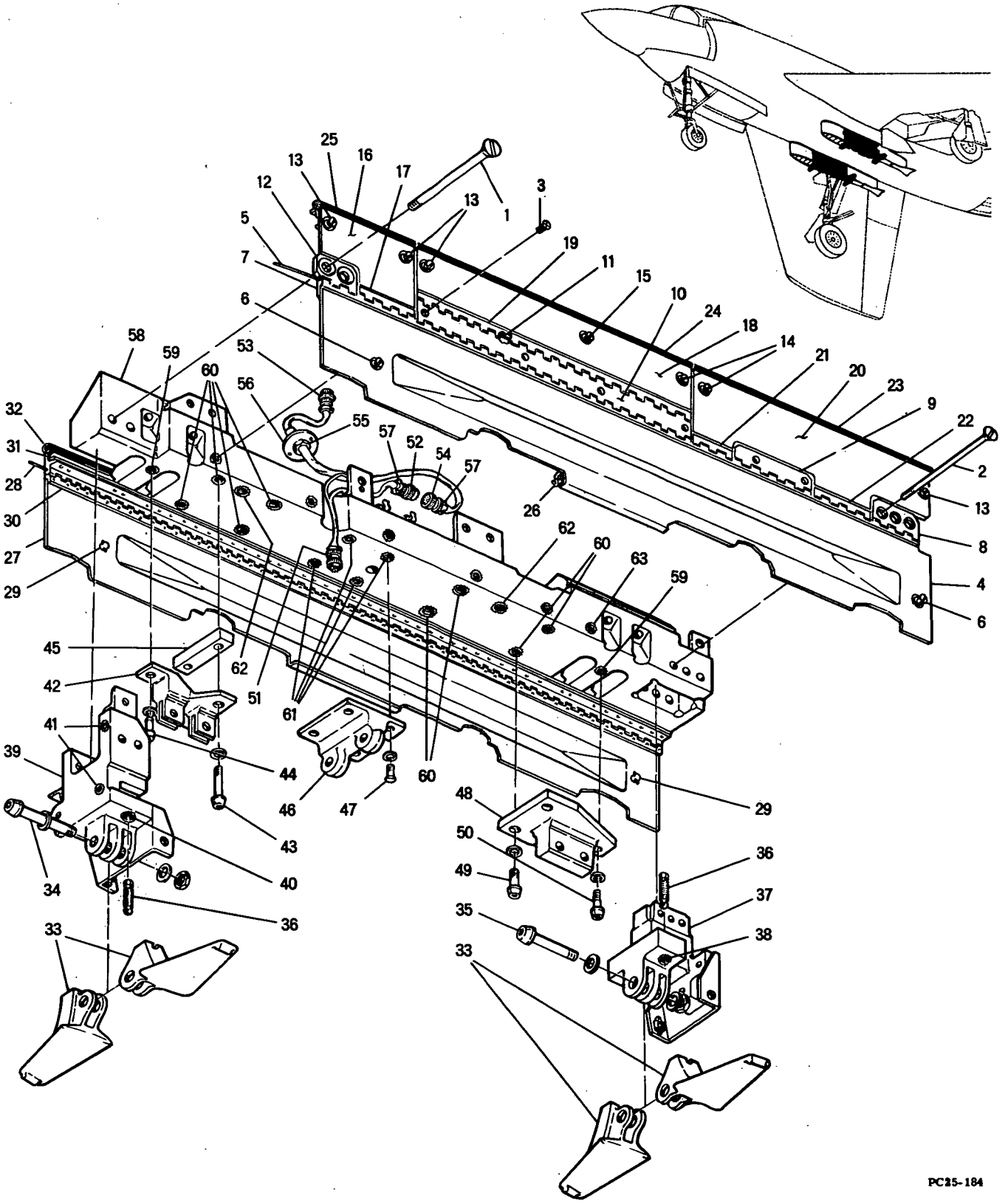

Figure 177 -- General Stores Aft Pylon Center Section Assembly

FIGURE & INDEX NUMBER	PART NUMBER	1 2 3 4 5 6 7 DESCRIPTION	UNITS PER ASS'Y	USABLE ON CODE
177 -	25-91008- 1	CENTER SECTION ASSEMBLY, GENERAL STORES AFT PYLON LH, SEE FIG. 174-15 FOR NEXT HIGHER ASSY	REF	25-91004-1
	25-91008-301	CENTER SECTION ASSEMBLY, GENERAL STORES AFT PYLON LH, SEE FIG. 174-15 FOR NEXT HIGHER ASSY	REF	25-91004-301
	25-91008- 2	CENTER SECTION ASSEMBLY, GENERAL STORES AFT PYLON RH, SEE FIG. 174-15 FOR NEXT HIGHER ASSY	REF	25-91004-2
	25-91008-302	CENTER SECTION ASSEMBLY, GENERAL STORES AFT PYLON RH, SEE FIG. 174-15 FOR NEXT HIGHER ASSY	REF	25-91004-302
	25-91087- 1	. DOOR ASSEMBLY, AFT PYLON OUTBOARD LH	1	
	25-91087- 2	. DOOR ASSEMBLY, AFT PYLON OUTBOARD RH	1	
		ATTACHING PARTS		
- 1	3M24SA47	. BOLT (MDA)	2	
	AN960D816	. WASHER	2	
	AN364-820	. NUT	2	
- 2	3M23SA42	. BOLT (MDA)	3	
	2-1452-070	. NUT (EN)	3	
	HS98480	. RETAINER (UC)	3	
- 3	AN509-10R10	. SCREW	6	
		¤----¤-¤-¤----¤		
- 4	25-91087- 3	. . DOOR LH	1	
	25-91087- 4	. . DOOR RH	1	
		ATTACHING PARTS		
- 5	AN253-2-4357	. . PIN, HINGE	1	
		¤----¤-¤-¤----¤		
- 6	98265-3-.390	. . STUD (MKL) USE WITH 99947P.130 RECEPTACLE (MKL)	2	
- 7	25-91087- 11	. . HINGE, HALF LH, ALTERED FROM 9M57H3A4370 (MDA)	1	
	25-91087- 12	. . HINGE, HALF RH, ALTERED FROM 9M57H3A4370 (MDA)	1	
- 8	25-91053- 3	. . HINGE, AFT PYLON OUTBD DOOR LOWER CENTER LH	1	
	25-91053- 4	. . HINGE, AFT PYLON OUTBD DOOR LOWER CENTER RH	1	
- 9	25-91087- 19	. . HINGE, HALF LH, ALTERED FROM 9M57HY5A552 (MDA)	1	
	25-91087- 20	. . HINGE, HALF RH, ALTERED FROM 9M57HY5A552 (MDA)	1	
- 10	25-91087- 13	. . HINGE, HALF LH, ALTERED FROM 9M57H5A1993 (MDA)	1	
	25-91087- 14	. . HINGE, HALF RH, ALTERED FROM 9M57H5A1993 (MDA)	1	
		ATTACHING PARTS		
- 11	AN253-2-1980	. . PIN, HINGE	1	
		¤----¤-¤-¤----¤		
- 12	25-91053-5	. . HINGE, AFT PYLON OUTBD DOOR LOWER CENTER LH	1	
	25-91053-6	. . HINGE, AFT PYLON OUTBD DOOR LOWER CENTER RH	1	
- 13	98265-3-.310	. . STUD (MKL) USE WITH 99947P.130 RECEPTACLE (MKL)	4	
	9 836	. . PIN, CROSS (MKL)	4	
- 14	98265-3-.340	. . STUD (MKL) USE WITH 99947P.130 RECEPTACLE (MKL)	2	
	99836	. . PIN, CROSS (MKL)	2	
- 15	98265-5-.460	. . STUD (MKL) USE WITH 99947P.130 RECEPTACLE (MKL)	1	
	99836	. . PIN, CROSS (MKL)	1	
- 16	25-91087- 9	. . DOOR LH	1	
	25-91087- 10	. . DOOR RH	1	
- 17	25-91087- 21	. . HINGE, HALF, ALTERED FROM 9M57HY3A429 (MDA)	1	
- 18	25-91087- 5	. . DOOR LH	1	
	25-91087- 6	. . DOOR RH	1	
- 19	25-91087- 15	. . HINGE, HALF LH, ALTERED FROM 9M57H3A1993 (MDA)	1	
	25-91087- 16	. . HINGE, HALF RH, ALTERED FROM 9M57H3A1993 (MDA)	1	
- 20	25-91087- 7	. . DOOR LH	1	
	25-91087- 8	. . DOOR RH	1	
- 21	25-91087- 23	. . HINGE, HALF, ALTERED FROM 9M57HX3A311 (MDA)	1	
- 22	25-91087- 17	. . HINGE, HALF, ALTERED FROM 9M57HX3A436 (MDA)	1	
- 23	25-91087- 31	. . SEAL, LH, SELECTED FROM 11M609 (MDA)	1	
	25-91087- 32	. . SEAL, RH, SELECTED FROM 11M609 (MDA)	1	
- 24	25-91087- 33	. . SEAL, LH, SELECTED FROM 11M609 (MDA)	1	
	25-91087- 34	. . SEAL, RH, SELECTED FROM 11M609 (MDA)	1	
- 25	25-91087- 35	. . SEAL, LH, SELECTED FROM 11M609 (MDA)	1	
- 26	25-91130- 1	. SUPPORT ASSEMBLY, PYLON OUTBOARD DOOR	1	
	25-91086- 1	. DOOR ASSEMBLY, AFT PYLON INBOARD LH	1	
	25-91086- 2	. DOOR ASSEMBLY, AFT PYLON INBOARD RH	1	
- 27	25-91086- 3	. . DOOR LH	1	
	25-91086- 4	. . DOOR RH	1	

FIGURE & INDEX NUMBER	PART NUMBER	1 2 3 4 5 6 7 DESCRIPTION	UNITS PER ASS'Y	USABLE ON CODE
177 -		ATTACHING PARTS		
- 28	AN253-2-4456	• • PIN, HINGE	1	
		¤----¤-¤-¤----¤		
- 29	98265-3-.290	• • STUD (MKL) USE WITH 99947P.130 RECEPTACLE (MKL)	2	
	99836	• • PIN, CROSS (MKL)	2	
- 30	25-91086- 5	• • HINGE, HALF LH, ALTERED FROM 9M57H3A4469 (MDA)	1	
	25-91086- 6	• • HINGE, HALF RH, ALTERED FROM 9M57H3A4469 (MDA)	1	
- 31	25-91086- 7	• • HINGE, HALF LH, ALTERED FROM 9M57H6A4469 (MDA)	1	
	25-91086- 8	• • HINGE, HALF RH, ALTERED FROM 9M57H6A4469 (MDA)	1	
- 32	25-91086- 11	• • SEAL, LH, SELECTED FROM 11M609 (MDA)	1	
	25-91086- 12	• • SEAL, RH, SELECTED FROM 11M609 (MDA)	1	
- 33	25-91081- 3	• BRACE, MK 51 & AERO 62A RACK	4	
		ATTACHING PARTS		
- 34	NAS464P9A39	• BOLT, FORWARD	1	
	AN960D916L	• WASHER, FORWARD	2	
	AN364-918	• NUT, FORWARD	1	
- 35	NAS464P9A37	• BOLT, AFT	1	
	AN960D916L	• WASHER, AFT	1	
	AN960D916	• WASHER, AFT	1	
	AN364-918	• NUT, AFT	1	
		¤----¤-¤-¤----¤		
- 36	25-91082- 3	• SCREW, PYLON SWAY BRACE ADJUSTING	4	
- 37	25-91122- 1	• ADAPTER ASSEMBLY, MK 51 & AERO 62A AFT SWAY BRACE LH	1	
	25-91122- 2	ADAPTER ASSEMBLY, MK 51 & AERO 62A AFT SWAY BRACE RH	1	
- 38	1191-10CN1.25	• • INSERT (AF)	2	
- 39	25-91127- 1	• ADAPTER ASSEMBLY, MK51 & AERO 62A FORWARD SWAY BRACE LH	1	
	25-91127- 2	• ADAPTER ASSEMBLY, MK51 & AERO 62A FORWARD SWAY BRACE RH	1	
- 40	1191-10CN15/16	• • INSERT (AF)	2	
- 41	RD206SB8L	• • INSERT (ROSN)	2	
	RL28SB8	• • RING, LOCK (ROSN) USE WITH INDEX 41	2	
- 42	25-91119- 3	• ADAPTER, MK 51 & AERO 62A RACK FORWARD	1	
		ATTACHING PARTS		
- 43	NAS148-34	• BOLT	2	
	NAS143-8C	• WASHER	2	
- 44	NAS146-19	• BOLT	1	
	NAS143-6C	• WASHER	1	
		¤----¤-¤-¤----¤		
- 45	25-91132- 3	• SPACER, MK 51 & AERO 62A FORWARD ADAPTER	1	
- 46	25-91074- 3	• SUPPORT, MK 51 & AERO 62A RACK HOIST	1	
		ATTACHING PARTS		
- 47	AN5-10A	• BOLT	4	
	AN960D516	• WASHER	4	
		¤----¤-¤-¤----¤		
- 48	25-91118- 3	• ADAPTER, MK 51 & AERO 62A RACK AFT	1	
		ATTACHING PARTS		
- 49	NAS148-25	• BOLT	2	
	NAS143-8C	• WASHER	2	
- 50	NAS146-23	• BOLT	1	
	NAS143-6C	• WASHER	1	
		¤----¤-¤-¤----¤		
	25-79000-160	• BUNDLE ASSEMBLY, WIRE, LEFT SIDE	1	
	25-79000-162	• BUNDLE ASSEMBLY, WIRE, RIGHT SIDE	1	
- 51	3106BS14S5S	• • PLUG (CED) STATION 4 MK 51 OR AERO 62A, USE WITH MS29513-14 O RING	1	
- 52	UC3-12-002	• • RECEPTACLE (CED)	1	
	25-79000-168	• BUNDLE ASSEMBLY, WIRE, LEFT SIDE	1	
	25-79000-170	• BUNDLE ASSEMBLY, WIRE, RIGHT SIDE	1	
- 53	3106BS18-1P	• • PLUG (CED) USE WITH MS29513-18 O RING	1	
- 54	UC3-11	• • PLUG (CED)	1	
- 55	5M13-4	• • BUSHING (MDA)	1	
	AN3066-4	• • NUT, USE WITH INDEX 55	1	
	AN960D1016L	• • WASHER, USE WITH INDEX 55	1	
	920AL900-10	• • SEAL (JM) USE WITH INDEX 55	1	
- 56	25-77090- 11	• • DOOR ASSEMBLY, EXTERNAL STORES, LEFT SIDE	1	
	25-77090- 3	• • DOOR ASSEMBLY, EXTERNAL STORES, RIGHT SIDE	1	

FIGURE & INDEX NUMBER	PART NUMBER	1 2 3 4 5 6 7 DESCRIPTION	UNITS PER ASS'Y	USABLE ON CODE
177 - 57	125002	• ADAPTER (LTF)	2	
- 58	25-91076- 1	• SUPPORT ASSEMBLY, AFT PYLON BEAM LH	1	
	25-91076- 2	• SUPPORT ASSEMBLY, AFT PYLON BEAM RH	1	
- 59	RD208SB10L	• • INSERT (ROSN)	2	
	RL38SB9	• • RING, LOCK (ROSN) USE WITH INDEX 59	2	
- 60	RD210SB12L	• • INSERT (ROSN)	8	
	RL56SB11	• • RING, LOCK (ROSN) USE WITH INDEX 60	8	
- 61	RD207SB9L	• • INSERT (ROSN)	4	
	RL31SB9	• • RING, LOCK (ROSN) USE WITH INDEX 61	4	
- 62	RD312SB16L	• • INSERT (ROSN)	2	
	RL72SB11	• • RING, LOCK (ROSN) USE WITH INDEX 62	2	
- 63	RD205SB7L	• • INSERT (ROSN)	6	
	RL24SB7	• • RING, LOCK (ROSN) USE WITH INDEX 63	6	

Alighting Gear

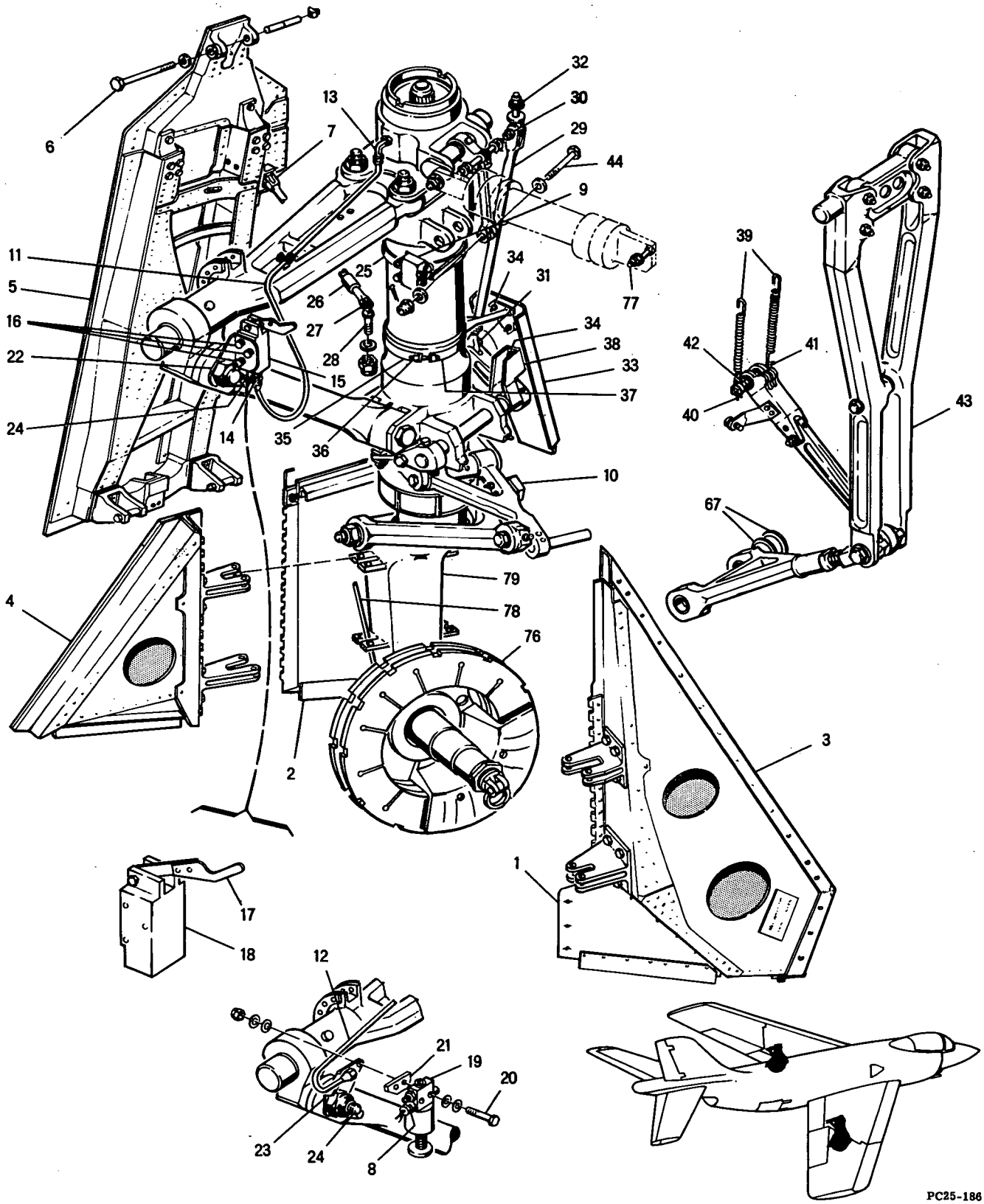

Figure 178 -- Main Landing Gear Installation (Sheet 1 of 2)

Alighting Gear

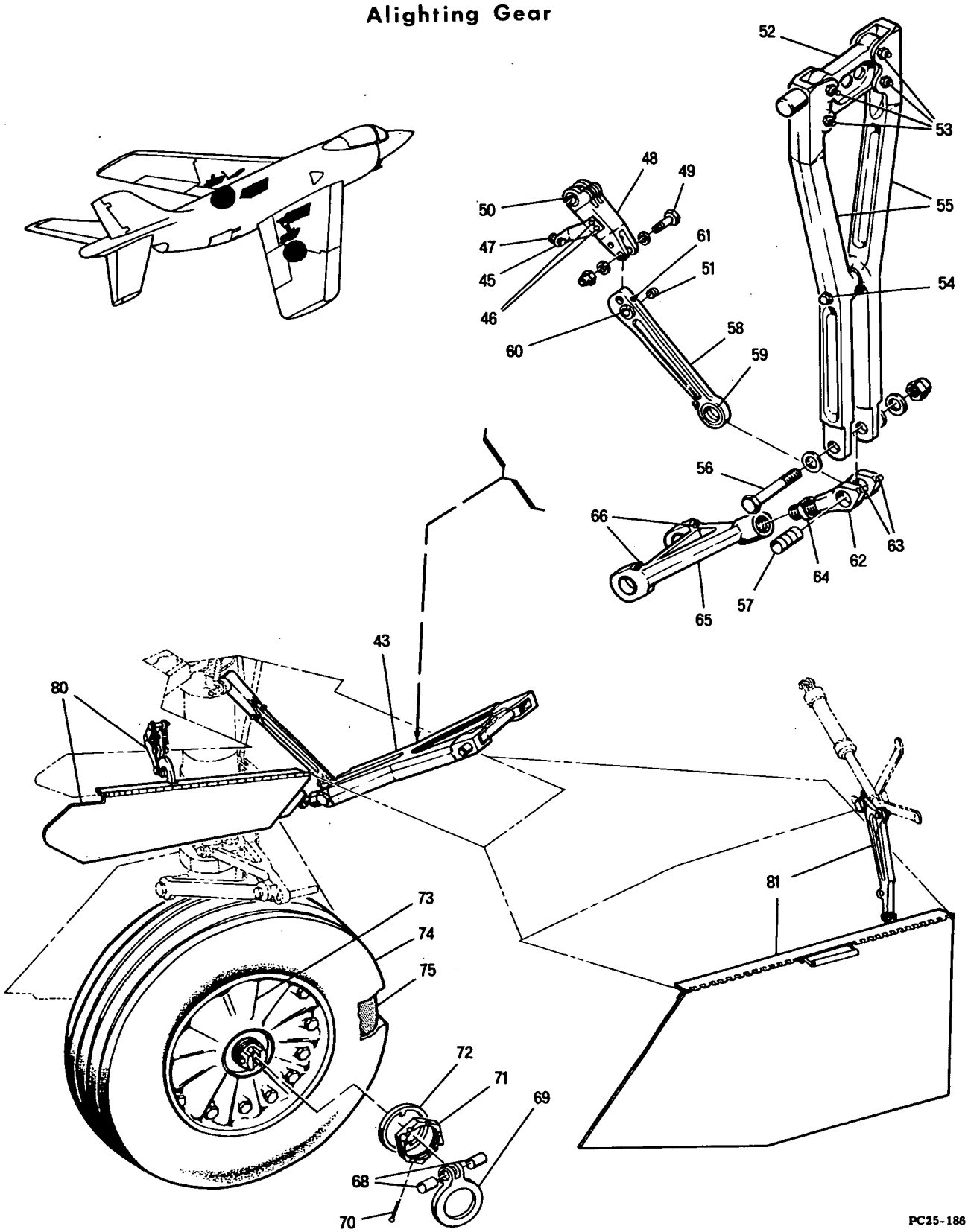

Figure 178 -- Main Landing Gear Installation (Sheet 2 of 2)

FIGURE & INDEX NUMBER	PART NUMBER	1 2 3 4 5 6 7 DESCRIPTION	UNITS PER ASS'Y	USABLE ON CODE
178 -	25-41000- 1	GEAR INSTL, MAIN LANDING LH, SEE FIG. 1-12 FOR NEXT HIGHER ASSY	1	A-B
	25-41000-301	GEAR INSTL, MAIN LANDING LH, SEE FIG. 1-12 FOR NEXT HIGHER ASSY	1	C-F
	25-41000- 2	GEAR INSTL, MAIN LANDING RH, SEE FIG. 1-12 FOR NEXT HIGHER ASSY	1	A-B
	25-41000-302	GEAR INSTL, MAIN LANDING RH, SEE FIG. 1-12 FOR NEXT HIGHER ASSY	1	C-F
- 1	25-42350-141	• DOOR ASSEMBLY, MAIN LG FORK LOWER LH, SEE FIG. 182	1	A-C
	25-42350-142	• DOOR ASSEMBLY, MAIN LG FORK LOWER RH, SEE FIG. 182	1	A-C
- 2	25-42350- 3	• DOOR ASSEMBLY, MAIN LG FORK CENTER LH, SEE FIG. 182	1	
	25-42350- 4	• DOOR ASSEMBLY, MAIN LG FORK CENTER RH, SEE FIG. 182	1	
		ATTACHING PARTS, SEE FIG. 182		
- 3	25-42350- 1	• DOOR ASSEMBLY, MAIN LG FORK FWD LH, SEE FIG. 182	1	
	25-42350- 2	• DOOR ASSEMBLY, MAIN LG FORK FWD RH, SEE FIG. 182	1	
		ATTACHING PARTS, SEE FIG. 182		
- 4	25-42350- 5	• DOOR ASSEMBLY, MAIN LG FORK AFT LH, SEE FIG. 182	1	
	25-42350- 6	• DOOR ASSEMBLY, MAIN LG FORK AFT RH, SEE FIG. 182	1	
		ATTACHING PARTS, SEE FIG. 182		
- 5	25-42100- 1	• DOOR ASSEMBLY, MAIN LG STRUT LH, SEE FIG. 182	1	
	25-42100- 2	• DOOR ASSEMBLY, MAIN LG STRUT RH, SEE FIG. 182	1	
		ATTACHING PARTS		
- 6	MS20005-51	• BOLT	1	
	NAS72-5-214	• BUSHING	1	
	MS20002C5	• WASHER	1	
	32-1452-054	• NUT (EN)	1	
- 7	AN394-27	• PIN, FLAT HEAD	1	
	AN380-2-2	• PIN, COTTER	1	
		¤----¤-¤-¤----¤		
	25-75002- 1	• WIRING INSTALLATION, MAIN LANDING GEAR LH	1	C-F
	25-75002- 2	• WIRING INSTALLATION, MAIN LANDING GEAR RH	1	C-F
	25-79000-152	• • BUNDLE ASSEMBLY, WIRE LH	1	C-F
	25-79000-154	• • BUNDLE ASSEMBLY, WIRE RH	1	C-F
- 8	3106BS10SL4S	• • • PLUG (CED) STRUT BLEED VALVE, USE WITH MS29513-12 O RING	1	
- 9	HS5	• • • SWITCH (EXS) MAIN LANDING GEAR DOWN LOCK	1	
- 10	HS5	• • • SWITCH (EXS) MAIN LANDING GEAR SCISSORS	1	
- 11	25-41059- 1	• TUBE ASSY, MAIN LANDING GEAR STRUT EXTENSION AIR PRESS. LH	1	A-B
	25-41059- 2	• TUBE ASSY, MAIN LANDING GEAR STRUT EXTENSION AIR PRESS. RH	1	A-B
- 12	25-41028- 1	• TUBE ASSY, MAIN LANDING GEAR STRUT EXTENSION AIR PRESS. LH	1	C-F
	25-41028- 2	• TUBE ASSY, MAIN LANDING GEAR STRUT EXTENSION AIR PRESS. RH	1	C-F
- 13	MS21908D4	• ELBOW	1	
	AN6290-4	• GASKET, USE WITH INDEX 13	1	
	AN924-4D	• NUT, USE WITH INDEX 13	1	
- 14	MS21902D4	• UNION	1	
	AN6290-4	• GASKET, USE WITH INDEX 14	1	
- 15	25-41055- 1	• VALVE ASSEMBLY, MAIN LG STRUT EXTENSION	1	A-B
		ATTACHING PARTS		
- 16	AN3-14A	• BOLT	3	
	AN960D10L	• WASHER	3	
	AN960D10	• WASHER	3	
	AN364-1032	• NUT	3	
		¤----¤-¤-¤----¤		
- 17	25-41055- 3	• • EXTENSION	1	
- 18	870468	• • VALVE (WK)	1	
- 19	201983	• VALVE (MAGH)	1	C-F
		ATTACHING PARTS		
- 20	AN3-17A	• BOLT	2	
	AN960D10L	• WASHER	2	
	AN960D10	• WASHER	4	
	AN364-1032	• NUT	2	
		¤----¤-¤-¤----¤		

FIGURE & INDEX NUMBER	PART NUMBER	1 2 3 4 5 6 7 DESCRIPTION	UNITS PER ASS'Y	USABLE ON CODE
178 - 21	25-41063- 3	• SPACER, MAIN LG STRUT EXTENSION VALVE	1	C-F
- 22	25-41054- 3	• SUPPORT, MAIN LG STRUT EXTENSION VALVE LH	1	A-B
	25-41054- 4	• SUPPORT, MAIN LG STRUT EXTENSION VALVE RH	1	A-B
- 23	25-41064- 3	• SUPPORT, MAIN LG STRUT EXTENSION VALVE LH	1	C-F
	25-41064- 4	• SUPPORT, MAIN LG STRUT EXTENSION VALVE RH	1	C-F
		ATTACHING PARTS		
- 24	AN3-31A	• BOLT	1	
	AN960D10	• WASHER	1	
	AN960D10L	• WASHER	1	
	AN364-1032	• NUT	1	
		¤----¤-¤-¤----¤		
- 25	25-41026- 1	• CLAMP ASSEMBLY, MAIN LG DOWN INDICATOR SWITCH	1	
- 26	25-41015- 1	• LINK ASSEMBLY, MAIN LG STRUT DOOR OPERATING	1	
		ATTACHING PARTS		
- 27	AN396-17	• PIN, FLAT HEAD	1	
	AN380-3-4	• PIN, COTTER	1	
		¤----¤-¤-¤----¤		
	25-41015- 3	• • ROD END	1	
	25-41015- 7	• • ROD END	1	
- 28	AN47-13	• BOLT EYE	1	
	AN960-716	• WASHER	2	
	AN310-7	• NUT	1	
	AN380-3-4	• PIN, COTTER	1	
- 29	25-41012- 1	• ROD ASSY, MAIN LANDING GEAR TWISTER PUSH-PULL	1	
		ATTACHING PARTS		
- 30	AN4-12A	• BOLT	1	
	AN960-416	• WASHER	3	
	AN365-428	• NUT	1	
- 31	AN4-14A	• BOLT	1	
	AN960D416L	• WASHER	1	
	AN960D416	• WASHER	2	
	AN365-428	• NUT	1	
		¤----¤-¤-¤----¤		
	BRE4095	• • BEARING, ROD END (SWPC)	1	
	AN316-6R	• • NUT	1	
	25-41012- 7	• • CLEVIS, ROD END	1	
- 32	25-41271- 1	• BOLT ASSEMBLY, MAIN STRUT ADJUSTING	1	
	BLR4000C	• • BEARING (SWPC)	1	
	AN960D816	• WASHER, USE WITH INDEX 32	6	
	AN960D816L	• WASHER, USE WITH INDEX 32	8	
	AN365-820	• NUT, USE WITH INDEX 32	1	
	25-41068- 1	• GUARD ASSY, MAIN LANDING GEAR BARRIER LH	1	
	25-41068- 2	• GUARD ASSY, MAIN LANDING GEAR BARRIER RH	1	
- 33	25-41067- 3	• • GUARD, MAIN LANDING GEAR BARRIER LH	1	
	25-41067- 4	• • GUARD, MAIN LANDING GEAR BARRIER RH	1	
		ATTACHING PARTS		
- 34	AN509-10R9	• • SCREW	4	
	AN960-10L	• • WASHER	8	
	AN365-1032	• • NUT	4	
		¤----¤-¤-¤----¤		
	25-41066- 1	• • CLAMP ASSY, MAIN LG BARRIER GUARD LH	1	
	25-41066- 2	• • CLAMP ASSY, MAIN LG BARRIER GUARD RH	1	
- 35	25-41066- 5	• • • STRAP ASSY	1	
		ATTACHING PARTS		
- 36	AN3-21A	• • • BOLT	2	
	AN960-10	• • • WASHER	4	
	AN365-1032	• • • NUT	2	
		¤----¤-¤-¤----¤		
- 37	25-41066- 3	• • • STRAP ASSY, LH	1	
	25-41066- 4	• • • STRAP ASSY, RH	1	
- 38	25-41065- 1	• • BRACKET ASSY, MAIN LG BARRIER GUARD	1	
- 39	25-41014- 3	• SPRING, MAIN LG OVERCENTER EXTENSION	2	
		ATTACHING PARTS		
- 40	AN380-3-2	• PIN, COTTER	2	
	AN960-516	• WASHER	4	
		¤----¤-¤-¤----¤		
- 41	25-41013- 3	• PIN, MAIN LANDING GEAR OVERCENTER SPRING	1	
		ATTACHING PARTS		
- 42	AN320-7	• NUT	1	
	AN960-716	• WASHER	1	
	AN380-3-4	• PIN, COTTER	1	
		¤----¤-¤-¤----¤		

FIGURE & INDEX NUMBER	PART NUMBER	1 2 3 4 5 6 7 DESCRIPTION	UNITS PER ASS'Y	USABLE ON CODE
178 - 43	25-41020- 1	• LINK ASSEMBLY, MAIN LANDING GEAR SIDE BRACE LH	1	
	25-41020- 2	• LINK ASSEMBLY, MAIN LANDING GEAR SIDE BRACE RH	1	
		ATTACHING PARTS		
- 44	NAS464-5-28	• BOLT	1	
	AN960D516L	• WASHER	1	
	AN960D516	• WASHER	1	
	AN320-5	• NUT	1	
	AN380-2-3	• PIN, COTTER	1	
		¤----¤-¤-¤----¤		
- 45	25-41025- 1	• • STRIKER ASSEMBLY, MAIN LG DOWN INDICATOR SWITCH LH	1	
	25-41025- 2	• • STRIKER ASSEMBLY, MAIN LG DOWN INDICATOR SWITCH RH	1	
		ATTACHING PARTS		
- 46	AN3H5A	• • BOLT	2	
	AN960D10L	• • WASHER	2	
		¤----¤-¤-¤----¤		
- 47	3M6-3-5	• • • BOLT (MDA)	1	
	AN960D516L	• • • WASHER	4	
	AN960D10L	• • • WASHER	1	
	AN364-1032	• • • NUT	1	
- 48	25-41222- 1	• • LINK ASSY, MAIN LANDING GEAR UPPER LOCK LH	1	
	25-41222- 2	• • LINK ASSY, MAIN LANDING GEAR UPPER LOCK RH	1	
		ATTACHING PARTS		
- 49	AN176-20A	• • BOLT	1	
	AN960D616L	• • WASHER	1	
	AN960D616	• • WASHER	1	
	AN320-5	• • NUT	1	
		¤----¤-¤-¤----¤		
- 50	4M34P7-62	• • • BUSHING (MDA)	2	
	1191-3CNX9/32	• • • INSERT (AF)	2	
- 51	NAS72-6-010	• • BUSHING	1	
- 52	25-41006- 3	• • BRIDGE, MAIN LANDING GEAR UPPER SIDE BRACE	1	
		ATTACHING PARTS		
- 53	AN6-21A	• • BOLT	4	
	AN960-616	• • WASHER	8	
	AN365-624	• • NUT	4	
		¤----¤-¤-¤----¤		
- 54	AN7-47A	• • BOLT	1	
	AN960-716	• • WASHER	2	
	AN365-720	• • NUT	1	
- 55	25-41004- 3	• • LINK, MAIN LANDING GEAR UPPER SIDE BRACE	2	
		ATTACHING PARTS		
- 56	25-41053- 3	• • BOLT, MAIN LANDING GEAR SIDE BRACE LINKAGE	1	
	NAS143-16C	• • WASHER	1	
	AN960-1616	• • WASHER	1	
	AN365-1614	• • NUT	1	
		¤----¤-¤-¤----¤		
- 57	25-41051- 5	• • BUSHING, MAIN LG SIDE BRACE CONNECTING	1	
- 58	25-41223- 1	• • LINK ASSEMBLY, MAIN LANDING GEAR LOWER LOCK	1	
- 59	4M34P20-32	• • • BUSHING (MDA)	2	
- 60	4M34P9-21	• • • BUSHING (MDA)	2	
- 61	AN944-101	• • • FITTING, LUB	2	
- 62	25-41216- 1	• • END ASSEMBLY, MAIN LG LOWER SIDE BRACE LINK	1	
- 63	AN944-101	• • • FITTING, LUB	2	
- 64	25-41052- 3	• • NUT, MAIN LG LOWER SIDE BRACE ADJUSTING	1	
- 65	25-41205- 1	• • LINK ASSEMBLY, MAIN LG LOWER SIDE BRACE	1	
- 66	AN944-101	• • • FITTING, LUB	2	
- 67	25-41062- 3	• SHIM, MAIN LANDING GEAR SWIVEL PIN	AR	
	25-41045- 1	• WHEEL ASSEMBLY, MAIN LANDING GEAR	1	
		ATTACHING PARTS		
- 68	25-41258- 3	• PIN, MAIN LG STRUT TOW RING, SEE FIG. 180-1	REF	
- 69	25-41207- 3	• RING, MAIN LG STRUT TOW, SEE FIG. 180-2	REF	
- 70	AN380-4-4	• PIN, COTTER	REF	
- 71	25-41250- 3	• NUT, MAIN LANDING GEAR STRUT WHEEL RETAINER	REF	
- 72	25-41251- 3	• WASHER, MAIN LANDING GEAR STRUT WHEEL RETAINER	REF	
		¤----¤-¤-¤----¤		
- 73	9531032	• • WHEEL ASSY (GY) MCDONNELL SPEC 25-41001-1	1	
- 74	30X7.7	• • CASING (GY)	1	
- 75	30X7.7	• • TUBE (GY)	1	
	25-41045- 3	• BRAKE ASSEMBLY, MAIN LANDING GEAR LH	1	
	25-41045- 4	• BRAKE ASSEMBLY, MAIN LANDING GEAR RH	1	
- 76	9540784	• • BRAKE ASSY (GY) MCDONNELL SPEC 25-41001-3	1	

FIGURE & INDEX NUMBER	PART NUMBER	1 2 3 4 5 6 7 DESCRIPTION	UNITS PER ASS'Y	USABLE ON CODE
178 - 77	25-41069- 3	• BOLT, MAIN LANDING GEAR ACTUATOR ATTACHMENT	1	
	25-41070- 3	• WASHER, MAIN LANDING GEAR BEARING RETAINING	1	
	AN960-1216L	• WASHER	1	
	AN960-1216	• WASHER	1	
	AN365-1216	• NUT	1	
- 78	25-43000- 1	• LINES INSTALLATION, MAIN LANDING GEAR BRAKE LH SEE FIG. 181	1	
	25-43000- 2	• LINES INSTALLATION, MAIN LANDING GEAR BRAKE RH SEE FIG. 181	1	
- 79	25-41200- 1	• STRUT ASSY, MAIN LANDING GEAR LH, SEE FIG. 179	1	
	25-41200- 2	• STRUT ASSY, MAIN LANDING GEAR RH, SEE FIG. 179	1	
- 80	25-42450-301	• MECHANISM ASSEMBLY, MAIN LANDING GEAR DRAG BRACE DOOR LH, SEE FIG. 183	1	
	25-42450-302	• MECHANISM ASSEMBLY, MAIN LANDING GEAR DRAG BRACE DOOR RH, SEE FIG. 183	1	
- 81	25-42300- 1	• MECHANISM ASSY, MAIN LG INBOARD DOOR LH, SEE FIG. 183	1	
	25-42300- 2	• MECHANISM ASSY, MAIN LG INBOARD DOOR RH, SEE FIG. 183	1	

Alighting Gear

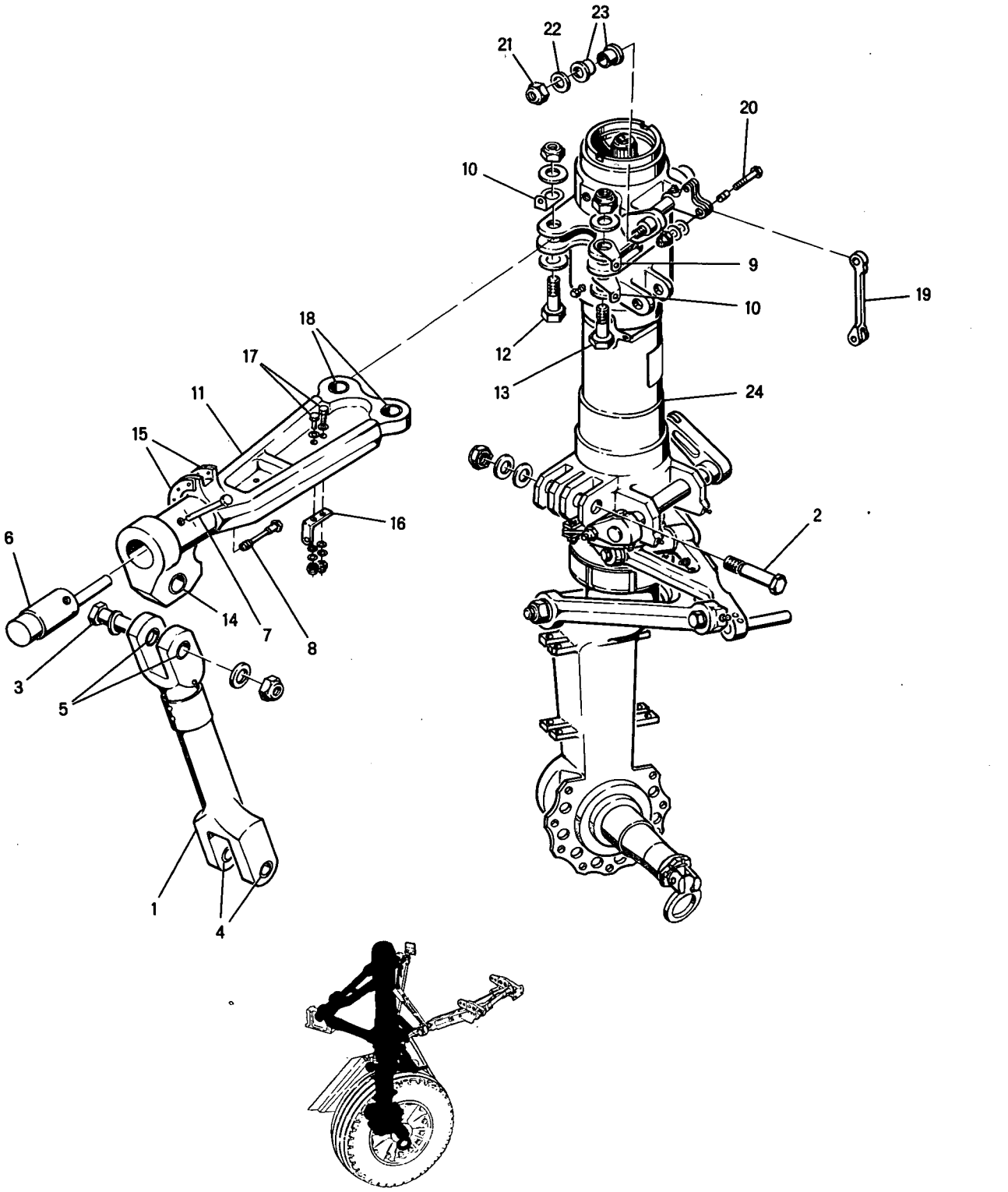

Figure 179 -- Main Landing Gear Strut Assembly

FIGURE & INDEX NUMBER	PART NUMBER	1 2 3 4 5 6 7 DESCRIPTION	UNITS PER ASS'Y	USABLE ON CODE
179 -	25-41200- 1	STRUT ASSY, MAIN LANDING GEAR RH, SEE FIG. 178-79 FOR NEXT HIGHER ASSEMBLY	REF	
	25-41200- 2	STRUT ASSY, MAIN LANDING GEAR RH, SEE FIG. 178-79 FOR NEXT HIGHER ASSEMBLY	REF	
- 1	25-41214- 1	• BRACE ASSY, MAIN LANDING GEAR STRUT DRAG	1	
		ATTACHING PARTS		
- 2	25-41270- 5	• BOLT, MAIN LANDING GEAR STRUT DRAG BRACE	1	
	AN960-1016	• WASHER	2	
	AN364-1018	• NUT	1	
- 3	25-41277- 3	• BOLT, MAIN LANDING GEAR STRUT TRUNNION	1	
	4M36-11002	• WASHER (MDA)	1	
	4M36-11001	• WASHER (MDA)	1	
	AN364-1812	• NUT	1	
		¤----¤-¤-¤----¤		
- 4	25-41243- 3	• • BUSHING, MAIN LANDING GEAR DRAG BRACE	2	
- 5	25-41241- 5	• • BUSHING, MAIN LG DRAG BRACE & TRUNNION	2	
- 6	25-41268- 3	• PIN, MAIN LANDING GEAR AFT TRUNNION	1	
		ATTACHING PARTS		
- 7	AN395-89	• PIN, FLAT HEAD	1	
	AN380-3-3	• PIN, COTTER	1	
- 8	25-41267- 3	• BOLT, MAIN LG AFT TRUNNION PIN RETRACTING	1	
		¤----¤-¤-¤----¤		
- 9	25-75065- 3	• BRACKET, WIRE BUNDLE SUPPORT	1	
- 10	25-75065- 5	• BRACKET, WIRE BUNDLE SUPPORT	2	
- 11	25-41239- 1	• TRUNNION ASSY, MAIN LANDING GEAR STRUT LH	1	
	25-41239- 2	• TRUNNION ASSY, MAIN LANDING GEAR STRUT RH	1	
		ATTACHING PARTS		
- 12	25-41274- 3	• BOLT, MAIN LANDING GEAR OUTER CYLINDER	1	
	AN960-1616L	• WASHER	1	
	AN960-1416	• WASHER	1	
	AN364-1414	• NUT	1	
- 13	25-41274- 3	• BOLT, MAIN LANDING GEAR OUTER CYLINDER	1	
	AN960-1616L	• WASHER	1	
	AN960-1416L	• WASHER	1	
	AN364-1414	• NUT	1	
		¤----¤-¤-¤----¤		
- 14	25-41241- 3	• • BUSHING, MAIN LG DRAG BRACE & TRUNNION	1	
- 15	25-41240- 3	• • PLATE, MAIN LANDING GEAR TRUNNION RUBBING	2	
	NAS77-6-32	• • BUSHING	1	
- 16	25-41283- 3	• • CLIP, MAIN LG BRAKE LINE SWIVEL SUPPORT	1	
		ATTACHING PARTS		
- 17	AN3-6A	• • BOLT	2	
	AN960D10L	• • WASHER	2	
	AN960D10	• • WASHER	4	
	AN960D10L	• • WASHER, RIGHT SIDE ONLY	2	
	AN365-1032	• • NUT	2	
		¤----¤-¤-¤----¤		
- 18	4M33-14-101	• • BUSHING (MDA)	2	
- 19	25-41008- 5	• LINK, MAIN LANDING GEAR RETRACTING	1	
		ATTACHING PARTS		
- 20	AN6-14A	• BOLT	1	
	AN960-616	• WASHER	2	
	NAS72-6-007	• BUSHING	1	
	AN365-624	• NUT	1	
		¤----¤-¤-¤----¤		
- 21	AN364-1018	• NUT	1	
- 22	4M36-05006	• WASHER (MDA)	1	
- 23	25-41284- 3	• WASHER, MAIN LANDING GEAR ACTUATOR CLAMP UP	2	
- 24	25-41200- 3	• OLEO ASSEMBLY, MAIN LANDING GEAR LH, SEE FIG. 180	1	
	25-41200- 4	• OLEO ASSEMBLY, MAIN LANDING GEAR RH, SEE FIG. 180	1	

Alighting Gear

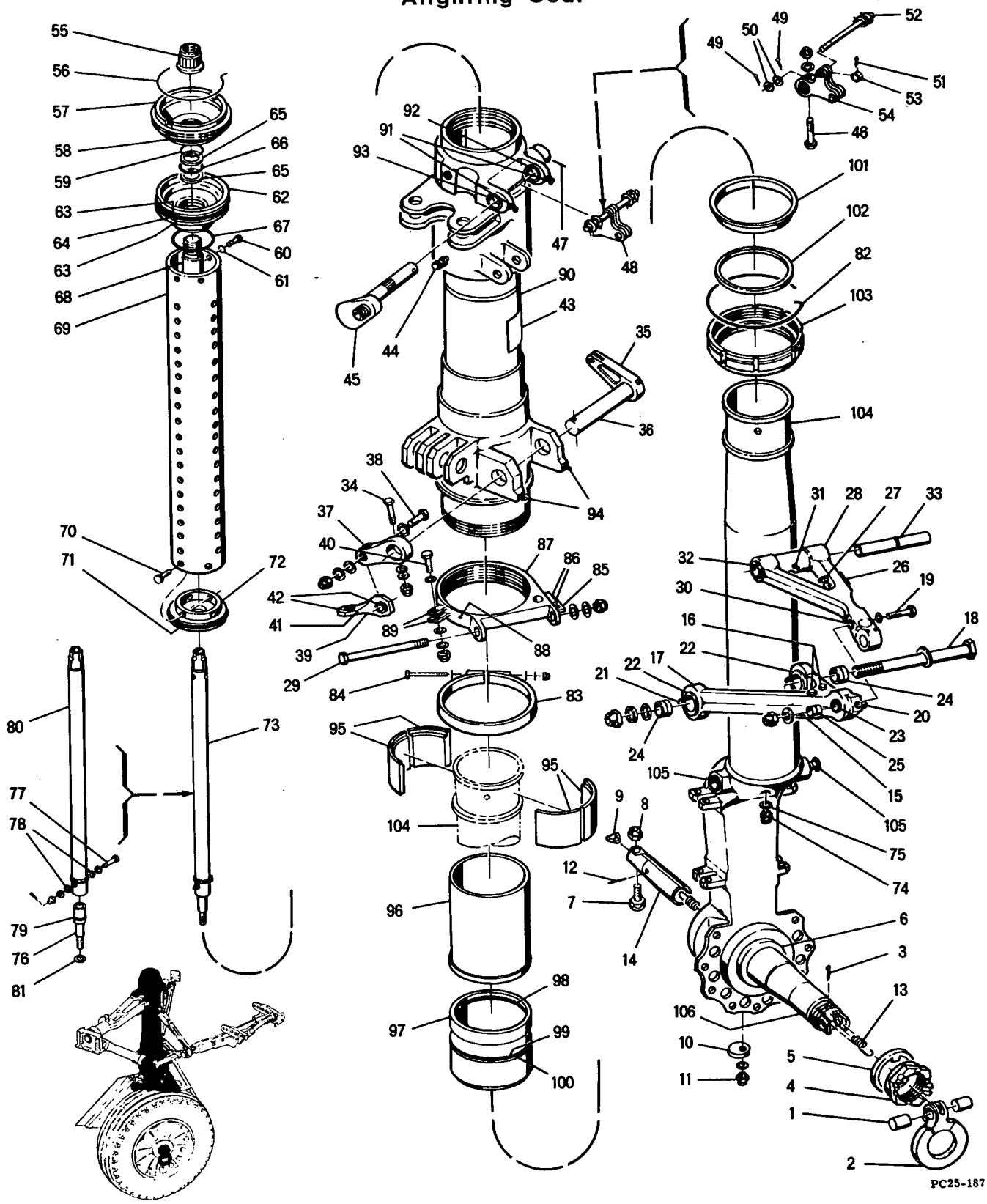

Figure 180 -- Main Landing Gear Oleo Assembly

FIGURE & INDEX NUMBER	PART NUMBER	1 2 3 4 5 6 7 DESCRIPTION	UNITS PER ASS'Y	USABLE ON CODE
180 -	25-41200- 3	OLEO ASSEMBLY, MAIN LANDING GEAR LH, SEE FIG. 179-24 FOR NEXT HIGHER ASSEMBLY	REF	
	25-41200- 4	OLEO ASSEMBLY, MAIN LANDING GEAR RH, SEE FIG. 179-24 FOR NEXT HIGHER ASSEMBLY	REF	
- 1	25-41258- 3	. PIN, MAIN LANDING GEAR STRUT TOW RING	2	
- 2	25-41207- 3	. RING, MAIN LANDING GEAR STRUT TOW	1	
- 3	AN380-4-4	. PIN, COTTER	1	
- 4	25-41250- 3	. NUT, MAIN LANDING GEAR STRUT WHEEL RETAINER	1	
- 5	25-41251- 3	. WASHER, MAIN LG STRUT WHEEL RETAINER	1	
- 6	25-41249- 3	. RING, MAIN LG STRUT OUTBOARD WHEEL BRG SEAL	1	
- 7	25-41236- 3	. POINT, MAIN LANDING GEAR STRUT JACK	1	
		ATTACHING PARTS		
- 8	AN316-7R	. NUT	1	
		¤----¤-¤-¤----¤		
- 9	25-41286- 3	. PLATE, MAIN LANDING GEAR JACK POINT PULL	1	
- 10	25-41252- 3	. RETAINER, MAIN LANDING GEAR STRUT AXLE	1	
		ATTACHING PARTS		
- 11	AN502-416-16	. SCREW	1	
	AN960-416	. WASHER	1	
	AN365-428	. NUT	1	
		¤----¤-¤-¤----¤		
- 12	AN253-3-190	. PIN	1	
- 13	25-41257- 3	. SPRING, MAIN LG STRUT JACK POINT EXTENSION	1	
- 14	25-41242- 3	. BODY, MAIN LANDING GEAR STRUT JACK POINT	1	
- 15	25-41282- 1	. BUMPER ASSY, MAIN LG STRUT SCISSOR UP LATCH	1	
		ATTACHING PARTS		
- 16	AN3-13A	. BOLT	2	
	AN960D10	. WASHER	4	
	AN365-1032	. NUT	2	
		¤----¤-¤-¤----¤		
- 17	25-41281- 1	. LINK ASSY, MAIN LG STRUT LOWER TORQUE LH	1	
	25-41281- 2	. LINK ASSY, MAIN LG STRUT LOWER TORQUE RH	1	
		ATTACHING PARTS		
- 18	25-41253- 3	. BOLT, MAIN LG STRUT LOWER SCISSORS	1	
	AN960-1216L	. WASHER	1	
	AN960-1216	. WASHER	2	
	AN364-1216	. NUT	1	
- 19	AN6-32	. BOLT	1	
	4M36-03002	. WASHER (MDA)	1	
	4M36-03004	. WASHER (MDA)	2	
	AN310-6	. NUT	1	
	AN381-3-18	. PIN, COTTER	1	
		¤----¤-¤-¤----¤		
- 20	MS15001-1	. . FITTING, LUB	1	
- 21	MS15001-4	. . FITTING, LUB	2	
- 22	4M34P16-33	. . BUSHING (MDA)	4	
- 23	4M34P9-45	. . BUSHING (MDA)	2	
- 24	NAS72-12-015	. BUSHING	2	
- 25	NAS72-6-102	. BUSHING	1	
- 26	25-41279- 5	. SUPPORT, MAIN LG STRUT SAFETY SWITCH LH	1	
	25-41279- 6	. SUPPORT, MAIN LG STRUT SAFETY SWITCH RH	1	
		ATTACHING PARTS		
- 27	AN509-10R16	. BOLT	1	
	AN960D10	. WASHER	1	
	AN365-1032	. NUT	1	
		¤----¤-¤-¤----¤		
- 28	25-41209- 1	. LINK ASSY, MAIN LG STRUT UPPER TORQUE	1	
		ATTACHING PARTS		
- 29	AN10-54A	. BOLT	1	
	AN960-1016	. WASHER	2	
	AN365-1018	. NUT	1	
		¤----¤-¤-¤----¤		
- 30	4M34-6-60	. . BUSHING (MDA)	2	
- 31	AN944-101	. . FITTING, LUB	1	
- 32	4M34P14-100	. . BUSHING (MDA)	2	
- 33	NAS72-10-313	. BUSHING	1	
	25-41272-301	. PIN ASSY, MAIN LG STRUT SWIVEL ACTUATING LH	1	
	25-41272-302	. PIN ASSY, MAIN LG STRUT SWIVEL ACTUATING RH	1	
		ATTACHING PARTS		
- 34	AN6-23A	. BOLT	1	
	AN960-616	. WASHER	2	
	AN365-624	. NUT	1	
		¤----¤-¤-¤----¤		

FIGURE & INDEX NUMBER	PART NUMBER	1 2 3 4 5 6 7 DESCRIPTION	UNITS PER ASS'Y	USABLE ON CODE
180 - 35	25-41219- 3	• • ARM, MAIN LG STRUT SWIVEL ACTUATING	1	
- 36	25-41272- 5	• • PIN, MAIN LG STRUT SWIVEL ACTUATING LH	1	
	25-41272- 6	• • PIN, MAIN LG STRUT SWIVEL ACTUATING RH	1	
- 37	25-41220- 3	• ARM, MAIN LANDING GEAR STRUT SWIVEL	1	
		ATTACHING PARTS		
- 38	25-41275- 5	• BOLT, MAIN LG STRUT SWIVEL LINKAGE	1	
	AN960-816	• WASHER	1	
	AN364-820	• NUT	1	
		¤----¤-¤-¤----¤		
- 39	25-41221- 1	• LINK ASSY, MAIN LANDING GEAR STRUT SWIVEL	1	
		ATTACHING PARTS		
- 40	25-41276- 3	• BOLT, MAIN LANDING GEAR SWIVEL COLLAR	1	
	AN960-816L	• WASHER	1	
	AN960-816	• WASHER	1	
	AN364-820	• NUT	1	
		¤----¤-¤-¤----¤		
- 41	NAS497	• • FITTING, LUB	3	
- 42	BLR8000C-G	• • BEARING (SWPC)	2	
- 43	25-41273- 3	• PLATE, MAIN LG STRUT NAME & INSTRUCTION	1	
- 44	AN6287-1	• VALVE	1	
- 45	25-41218- 5	• CRANK, MAIN LANDING GEAR STRUT RETRACTING, FOR FUTURE PROCUREMENT USE 25-41218-7	1	A-84
	25-41218- 7	• CRANK, MAIN LANDING GEAR STRUT RETRACTING, USE FOR FUTURE PROCUREMENT TO REPLACE 25-41218-5	1	
		ATTACHING PARTS		
- 46	NAS464-4A24	• BOLT	1	
	AN960-416	• WASHER	1	
	AN364-428	• NUT	1	
- 47	52-040-187-1125	• PIN, ROLL (EN)	1	
		¤----¤-¤-¤----¤		
- 48	25-41011- 1	• LINK ASSY, MAIN LG STRUT UPPER ACTUATING	1	
- 49	AN381-2-10	• • PIN, COTTER	4	
- 50	AN960D516	• • WASHER	4	
- 51	AN381-2-12	• • PIN, COTTER	1	
- 52	25-41011- 5	• • TUBE, MAIN LG STRUT UPPER ACTUATING LINK	1	
- 53	NAS43-5-27	• • SPACER	1	
- 54	25-41011- 3	• • LINK	1	
- 55	EB164	• NUT (EN)	1	
- 56	25-41259- 3	• RING, MAIN LG STRUT CYLINDER HEAD RETAINER	1	
- 57	25-41234- 3	• CAP, MAIN LANDING GEAR STRUT CYLINDER END	1	
- 58	AN6230B21	• GASKET, O RING	1	
- 59	AN6227B20	• PACKING, O RING	1	
- 60	25-41263- 3	• BOLT, MAIN LG ORIFICE TUBE ATTACHING	4	
- 61	AN6227B5	• PACKING, O RING	4	
- 62	25-41235- 3	• HEAD, MAIN LG STRUT UPPER FLOATING PISTON	1	
- 63	AN6246-48	• RING, BACK UP	2	
- 64	AN6227B48	• PACKING, O RING	1	
- 65	AN6246-25	• RING, BACK UP	2	
- 66	AN6227B25	∘ PACKING, O RING	1	
- 67	AN6230B6	∘ GASKET, O RING	1	
- 68	25-41237- 3	∘ ROD, MAIN LANDING GEAR STRUT EXTENDER STOP	1	
- 69	25-41212- 3	∘ TUBE, MAIN LANDING GEAR STRUT ORIFICE	1	
		ATTACHING PARTS		
- 70	AN4-6A	• BOLT	6	
	22FT428	• NUT (SPS)	6	
		¤----¤-¤-¤----¤		
- 71	2356A	∘ RING (KPRD) MAIN LG STRUT METERING ORIFICE	1	
- 72	25-41254- 5	• ORIFICE, MAIN LANDING GEAR STRUT METERING	1	
- 73	25-41213- 1	• TUBE ASSY, MAIN LANDING GEAR STRUT METERING	1	
		ATTACHING PARTS		
- 74	AN365-720	• NUT	1	
- 75	AN960-716	• WASHER	1	
		¤----¤-¤-¤----¤		
- 76	25-41246- 3	∘ • PLUG, MAIN LG STRUT METERING TUBE	1	
		ATTACHING PARTS		
- 77	AN23-25	∘ ∘ BOLT	1	
	AN960-10L	∘ ∘ WASHER	1	
	AN960-10	∘ ∘ WASHER	2	
	AN320-3	∘ ∘ NUT	1	
	AN380-2-2	∘ ∘ PIN, COTTER	1	
		¤----¤-¤-¤----¤		
- 78	200AC10	∘ ∘ LOCK O SEAL (WFRC)	2	

FIGURE & INDEX NUMBER	PART NUMBER	1 2 3 4 5 6 7 DESCRIPTION	UNITS PER ASS'Y	USABLE ON CODE
180 - 79	AN6227B13	• • PACKING, O RING	1	
- 80	25-41213- 9	• • TUBE ASSY, ALTERNATE 25-41213-3	1	
- 81	200AC1/2	• LOCK O SEAL (WFRC)	1	
- 82	25-41260- 3	• RING, MAIN LG STRUT LOWER CYL NUT RETAINER	1	
- 83	25-41256- 1	• SPACER ASSY, MAIN LG STRUT SWIVEL COLLAR	1	
- 84	AN6-36A	• • BOLT	1	
	AN960D616	• • WASHER	3	
	AN365-624	• • NUT	1	
- 85	25-41280- 1	• STRIKER ASSY, MAIN LG STRUT SAFETY SWITCH	1	
		ATTACHING PARTS		
- 86	AN502-10-6	• SCREW	2	
	AN960D10	• WASHER	2	
		¤----¤-¤-¤----¤		
- 87	25-41224- 1	• COLLAR ASSY, MAIN LG STRUT SWIVEL LH	1	
	25-41224- 2	• COLLAR ASSY, MAIN LG STRUT SWIVEL RH	1	
- 88	NAS497	• • FITTING, LUB	3	
- 89	25-41228- 3	• • BUSHING, MAIN LANDING STRUT SWIVEL COLLAR	2	
- 90	25-41226- 1	• CYLINDER ASSY, MAIN STRUT OUTER LH	1	
	25-41226- 2	• CYLINDER ASSY, MAIN STRUT OUTER RH	1	
- 91	AN944-301	• • FITTING, LUB	2	
- 92	4M34P14-16	• • BUSHING (MDA)	2	
- 93	25-41285- 3	• • BUSHING, MAIN LG OUTER CYL ACTUATOR BELL CRANK	1	
	NAS497	• • FITTING, LUB	1	
- 94	AN944-101	• • FITTING, LUB	2	
- 95	25-41269- 7	• BEARING, MAIN LANDING GEAR STRUT UPPER	4	
- 96	25-41244- 3	• SLEEVE, MAIN LANDING GEAR STRUT STOP	1	
- 97	25-41211- 3	• BEARING, MAIN LANDING GEAR STRUT LOWER	1	
- 98	2383916-500	• PACKING (DC) MAIN LANDING GEAR STRUT	1	
- 99	AN6230B24	• GASKET, O RING	1	
-100	AN6244-24	• RING, BACK UP	1	
-101	25-41264- 3	• BEARING, MAIN LANDING GEAR STRUT LOWER NUT	1	
-102	AN6231A39	• SCRAPER	1	
-103	25-41247- 3	• NUT, MAIN LANDING GEAR STRUT OUTER CYLINDER	1	
-104	25-41204- 1	• FORK ASSY, MAIN LANDING GEAR STRUT	1	
-105	4M34-12-100	• • BUSHING (MDA)	2	
-106	25-41248-301	• • AXLE ASSY, MAIN LANDING GEAR STRUT, USE FOR FUTURE PROCUREMENT TO REPLACE 25-41248-1	1	
	25-41248- 1	• • AXLE ASSY, MAIN LANDING GEAR STRUT, MAY BE USED IF 25-41248-301 IS NOT AVAILABLE	1	A-C3
	52-032-156-0562	• • • PIN, ROLL (EN)	1	

Alighting Gear

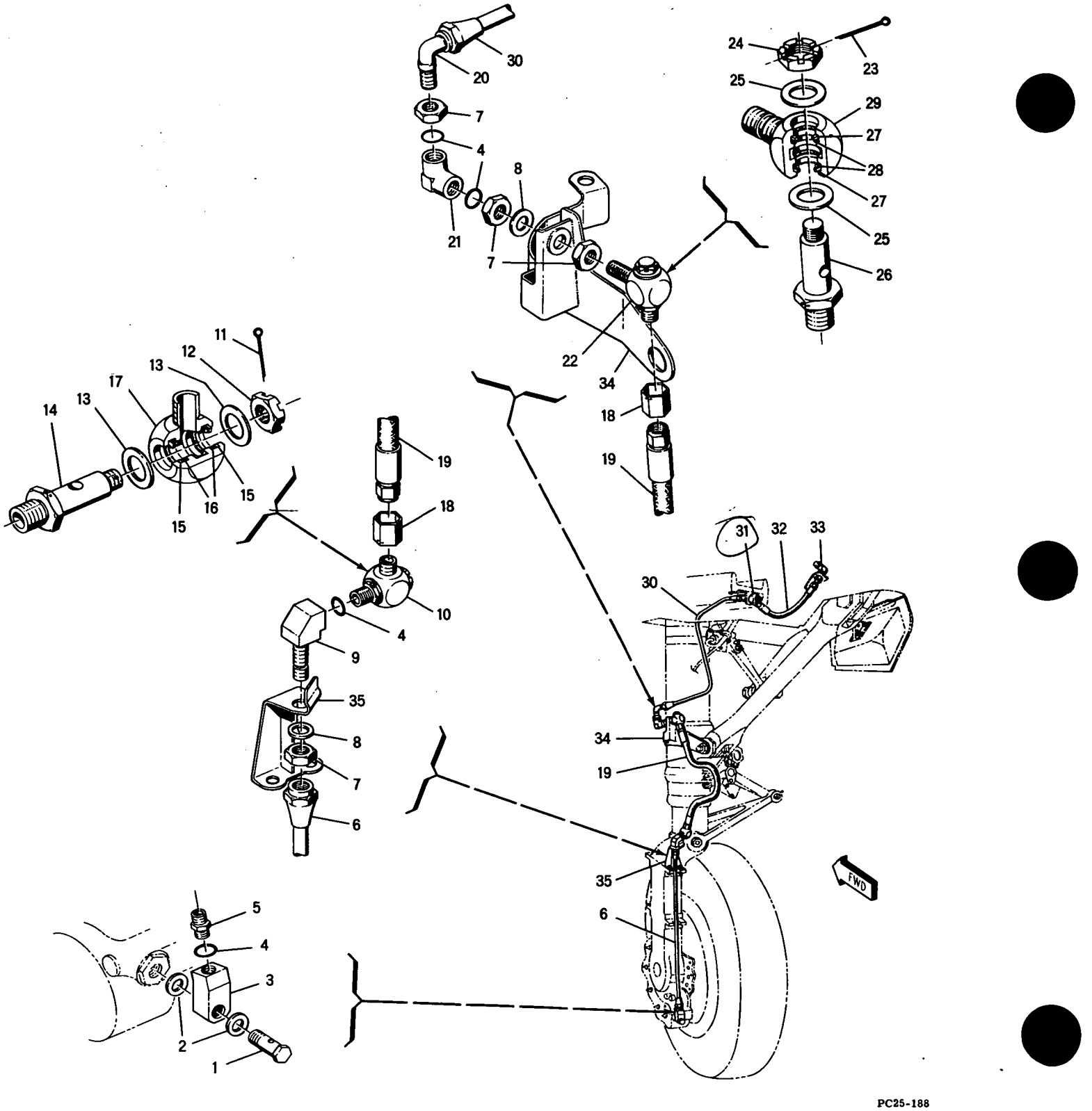

Figure 181 -- Main Landing Gear Brake Lines Installation

FIGURE & INDEX NUMBER	PART NUMBER	1 2 3 4 5 6 7 DESCRIPTION	UNITS PER ASS'Y	USABLE ON CODE
181 -	25-43000- 1	LINES INSTALLATION, MAIN LANDING GEAR BRAKE LH, SEE FIG. 178-78 FOR NEXT HIGHER ASSEMBLY	REF	
	25-43000- 2	LINES INSTALLATION, MAIN LANDING GEAR BRAKE RH, SEE FIG. 178-78 FOR NEXT HIGHER ASSEMBLY	REF	
- 1	AN775-5	• BOLT	1	
- 2	AN901-5A	• GASKET	2	
- 3	25-43051- 3	• ELBOW, MAIN LANDING GEAR BRAKE LINE	1	
- 4	AN6290-5	• GASKET	4	
- 5	MS21902D5	• UNION	1	
- 6	25-43058- 7	• LINE ASSY, MAIN LANDING BRAKE, LEFT SIDE	1	
	25-43058- 9	• LINE ASSY, MAIN LANDING BRAKE, RIGHT SIDE	1	
- 7	AN924-5D	• NUT	4	
- 8	AN960D816L	• WASHER	2	
- 9	7M18D5	• ELBOW (MDA)	1	
- 10	25-43056- 1	• SWIVEL ASSY, MAIN LG BRAKE LINE LOWER	1	
- 11	AN380-2-4	• • PIN, COTTER	1	
- 12	AN320C5	• • NUT	1	
- 13	AN960-716L	• • WASHER	2	
- 14	7M9C5	• • PIN, HYDRAULIC SWIVEL (MDA)	1	
- 15	6144-9	• • RING, BACK UP (SHWS)	2	
- 16	AN6227B9	• • PACKING, O RING	2	
- 17	25-43056- 3	• • BARREL, HYDRAULIC SWIVEL, ALTERED FROM 7M8D5 (MDA)	1	
- 18	25-43054- 3	• SLEEVE, MAIN LG BRAKE LINE HOSE LOCK	2	
- 19	ER6292-5-21.5	• HOSE ASSY (WH)	1	
- 20	MS21908D5	• ELBOW	1	
- 21	AN939D5	• ELBOW	1	
- 22	25-43055- 1	• SWIVEL ASSY, MAIN LG BRAKE LINE UPPER	1	
- 23	AN380-2-4	• • PIN, COTTER	1	
- 24	AN320C5	• • NUT	1	
- 25	AN960D716L	• • WASHER	2	
- 26	25-43057- 3	• • PIN, MAIN LG BRAKE LINE UPPER SWIVEL	1	
- 27	6144-9	• • RING, BACK UP (SHWS)	2	
- 28	AN6227B9	• • PACKING, O RING	2	
- 29	25-43055- 3	• • BARREL, HYDRAULIC SWIVEL	1	
- 30	25-43058- 3	• LINE ASSY, MAIN LG BRAKE, LEFT SIDE	1	
	25-43058- 5	• LINE ASSY, MAIN LG BRAKE, RIGHT SIDE	1	
- 31	7M14D5	• SWIVEL ASSY, HYDRAULIC (MDA)	1	
	AN924-5D	• NUT, USE WITH INDEX 31	1	
	AN960D816L	• WASHER, USE WITH INDEX 31	2	
- 32	ER6292-5-14	• HOSE ASSY (WH)	1	
- 33	MS21908D5	• ELBOW	1	
	AN924-5D	• NUT, USE WITH INDEX 33	1	
- 34	25-43052- 1	• SUPPORT ASSY, MAIN LG BRAKE LINE LH	1	
	25-43052- 2	• SUPPORT ASSY, MAIN LG BRAKE LINE RH	1	
- 35	25-43053- 1	• SUPPORT ASSY, MAIN LG BRAKE LINE LOWER LH	1	
	25-43053- 2	• SUPPORT ASSY, MAIN LG BRAKE LINE LOWER RH	1	

Alighting Gear

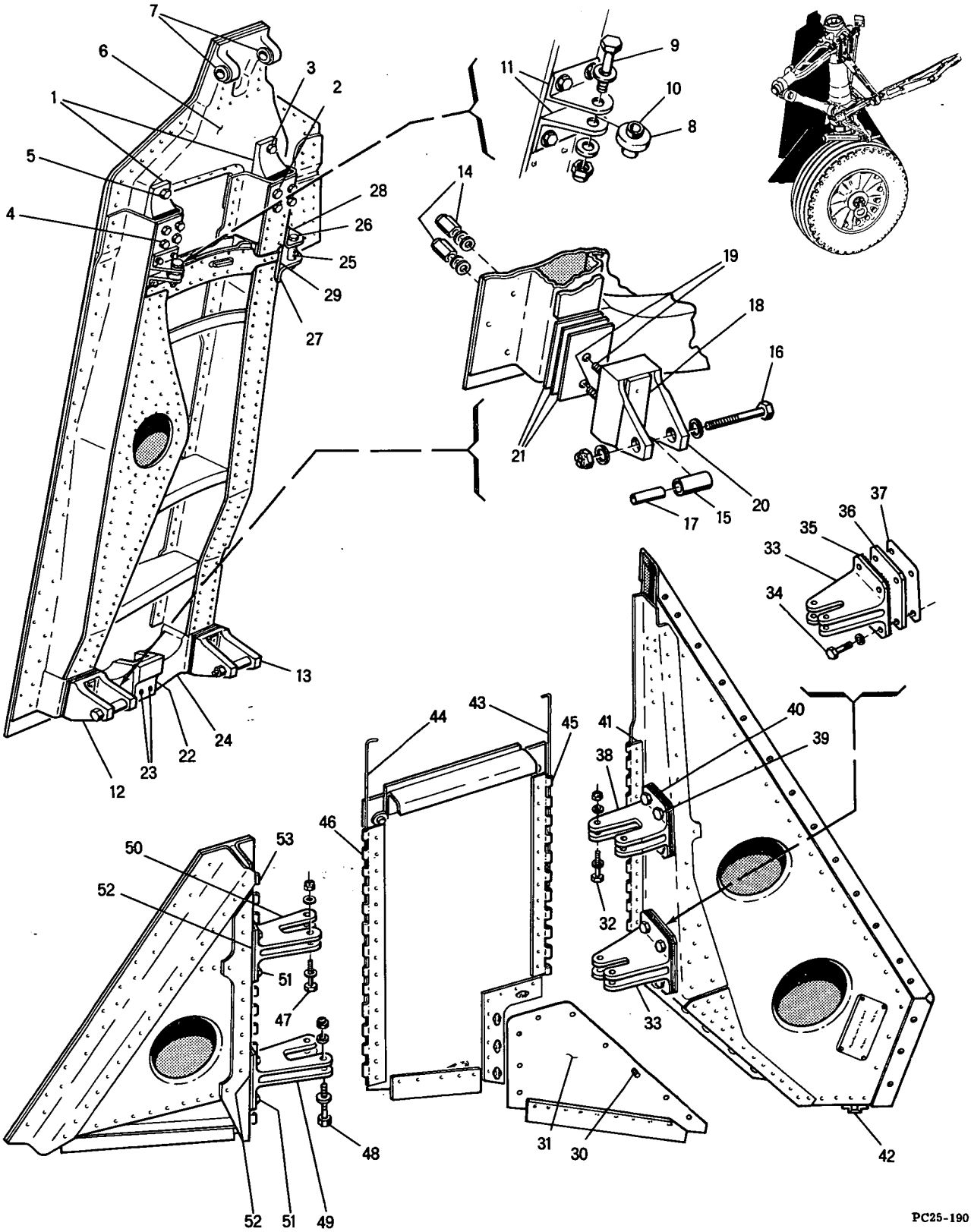

Figure 182 -- Main Landing Gear Strut and Fork Door Assemblies

FIGURE & INDEX NUMBER	PART NUMBER	1 2 3 4 5 6 7 DESCRIPTION	UNITS PER ASS'Y	USABLE ON CODE
182 -	25-42100- 1	DOOR ASSY, MAIN LANDING GEAR STRUT LH, SEE FIG. 178-5 FOR NEXT HIGHER ASSY	REF	
	25-42100- 2	DOOR ASSY, MAIN LANDING GEAR STRUT RH, SEE FIG. 178-5 FOR NEXT HIGHER ASSY	REF	
- 1	25-42169- 3	• BLOCK, MAIN LANDING GEAR STRUT DOOR LH	2	
	25-42169- 4	• BLOCK, MAIN LANDING GEAR STRUT DOOR RH	2	
		ATTACHING PARTS		
- 2	AN4-16A	• BOLT	4	
	AN960D416L	• WASHER	4	
	25-42100- 21	• SHIM	AR	
	AN960D416	• WASHER	4	
	AN365-428	• NUT	4	
- 3	AN4-12A	• BOLT	1	
	AN960D416L	• WASHER	1	
	AN960D416	• WASHER	2	
	AN365-428	• NUT	1	
- 4	AN4-15A	• BOLT	4	
	AN960D416L	• WASHER	4	
	25-42100- 21	• SHIM	AR	
	AN960D416	• WASHER	8	
	AN365-428	• NUT	4	
- 5	AN4-10A	• BOLT	1	
	AN960D416L	• WASHER	1	
	AN960D416	• WASHER	2	
	AN365-428	• NUT	1	
		¤----¤-¤-¤----¤		
- 6	25-42155- 1	• HINGE ASSY, MAIN LANDING GEAR STRUT DOOR LH	1	
	25-42155- 2	• HINGE ASSY, MAIN LANDING GEAR STRUT DOOR RH	1	
- 7	4M34P8-50	• • BUSHING (MDA)	2	
- 8	25-42156- 1	• ROLLER ASSEMBLY, MAIN LG STRUT DOOR GUIDE	1	
		ATTACHING PARTS		
- 9	AN5-12A	• BOLT	1	
	AN960D516L	• WASHER	1	
	AN960D516	• WASHER	1	
	AN365-524	• NUT	1	
		¤----¤-¤-¤----¤		
	NAS76A8-012P	• • BUSHING	1	
- 10	NAS72-5-008	• BUSHING	1	
- 11	25-42100- 49	• BRACKET	2	
		ATTACHING PARTS		
	AN3-6A	• BOLT	4	
	AN960D10	• WASHER	4	
		¤----¤-¤-¤----¤		
- 12	25-42161- 1	• BRACKET ASSY, STRUT DOOR LATCH ROLLER AFT	1	
- 13	25-42161- 3	• BRACKET ASSY, STRUT DOOR LATCH ROLLER FWD	1	
		ATTACHING PARTS		
- 14	12B048	• NUT (EN)	2	25-42161-1
	AN960D416	• WASHER	2	25-42161-1
	AN960D416L	• WASHER	2	25-42161-1
	12B048	• NUT (EN)	2	25-42161-3
	AN960D416	• WASHER	16	25-42161-3
		¤----¤-¤-¤----¤		
- 15	19-42133- 3	• • ROLLER, MAIN LANDING GEAR STRUT DOOR LATCH	1	
		ATTACHING PARTS		
- 16	NAS464P6A25	• • BOLT	1	
	AN960D616L	• • WASHER	1	
	AN960D616	• • WASHER	1	
	AN364-624	• • NUT	1	
		¤----¤-¤-¤----¤		
- 17	NAS72-6-100	• • BUSHING	1	
- 18	25-42163- 3	• • PLATE, STRUT DOOR LATCH ROLLER	1	
- 19	AN4-11A	• • BOLT	2	25-42161-1
	AN4-15A	• • BOLT	2	25-42161-3
- 20	25-42161- 5	• • BRACKET	1	
- 21	25-42100- 33	• SHIM	AR	
- 22	25-42167- 5	• PAD, MAIN LANDING GEAR STRUT DOOR	1	
		ATTACHING PARTS		
- 23	AN509-10R13	• BOLT	2	
	AN960D10	• WASHER	2	
	AN365-1032	• NUT	2	
		¤----¤-¤-¤----¤		
- 24	25-42164- 3	• BEAM, MAIN LANDING GEAR STRUT DOOR LH	1	

FIGURE & INDEX NUMBER	PART NUMBER	1 2 3 4 5 6 7 DESCRIPTION	UNITS PER ASS'Y	USABLE ON CODE
182 -	25-42164- 4	• BEAM, MAIN LANDING GEAR STRUT DOOR RH	1	
		ATTACHING PARTS		
	AN509-10R11	• SCREW	5	
	AN960D10	• WASHER	5	
	AN365-1032	• NUT	5	
		¤----¤-¤-¤----¤		
- 25	25-41017- 3	• TRUNNION, MAIN LANDING GEAR STRUT DOOR LINK	1	
		ATTACHING PARTS		
- 26	AN4-23A	• BOLT	1	
	AN960D416L	• WASHER	1	
	AN960D416	• WASHER	2	
	AN365-428	• NUT	1	
	NAS72-4-107	• BUSHING	1	
		¤----¤-¤-¤----¤		
- 27	25-42165- 3	• BRACKET, MAIN LG STRUT DOOR INBOARD LH	1	
- 28	25-42165- 4	• BRACKET, MAIN LG STRUT DOOR OUTBOARD RH	1	
		ATTACHING PARTS		
	AN3-25A	• BOLT	4	
	AN960D10L	• WASHER	4	
	AN960D10	• WASHER	4	
	AN365-1032	• NUT	4	
		¤----¤-¤-¤----¤		
- 29	25-42166- 3	• BLOCK, MAIN LANDING GEAR STRUT DOOR	1	
	25-42350-141	DOOR ASSY, MAIN LANDING GEAR FORK LOWER LH, SEE FIG. 178-1 FOR NEXT HIGHER ASSY	REF	A-C
	25-42350-142	DOOR ASSY, MAIN LANDING GEAR FORK LOWER RH, SEE FIG. 178-1 FOR NEXT HIGHER ASSY	REF	A-C
		ATTACHING PARTS		
- 30	AN509-10R9	SCREW		
		¤----¤-¤-¤----¤		
- 31	25-42350-163	• DOOR LH	1	A-C
	25-42350-164	• DOOR RH	1	A-C
	25-42350- 1	DOOR ASSY, MAIN LANDING GEAR FORK FWD LH, SEE FIG. 178-3 FOR NEXT HIGHER ASSY	REF	
	25-42350- 2	DOOR ASSY, MAIN LANDING GEAR FORK FWD RH, SEE FIG. 178-3 FOR NEXT HIGHER ASSY	REF	
		ATTACHING PARTS		
- 32	NAS464-6A15	BOLT	4	
	AN960PD616	WASHER	8	
	AN364-624	NUT	4	
		¤----¤-¤-¤----¤		
- 33	25-42355- 1	• SUPPORT ASSY, FORK DOOR FWD INBD LH	1	
	25-42355- 2	• SUPPORT ASSY, FORK DOOR FWD INBD RH	1	
		ATTACHING PARTS		
- 34	AN4-10A	• BOLT	4	
	AN960PD416	• WASHER	4	
		¤----¤-¤-¤----¤		
- 35	25-42360- 3	• • PLATE, FORK DOOR FWD INBD SERRATED LH	1	
	25-42360- 4	• • PLATE, FORK DOOR FWD INBD SERRATED RH	1	
- 36	25-42350- 37	• PLATE	1	
- 37	25-42350- 41	• SHIM	AR	
- 38	25-42356- 1	• SUPPORT ASSY, FORK DOOR FWD OUTBD LH	1	
	25-42356- 2	• SUPPORT ASSY, FORK DOOR FWD OUTBD RH	1	
		ATTACHING PARTS		
- 39	AN4-10A	• BOLT	4	
	AN960PD416	• WASHER	4	
		¤----¤-¤-¤----¤		
	25-42359- 3	• • PLATE, FORK DOOR FWD OUTBD SERRATED LH	1	
	25-42359- 4	• • PLATE, FORK DOOR FWD OUTBD SERRATED RH	1	
	25-42350- 39	• PLATE	1	
- 40	25-42350- 43	• SHIM	AR	
- 41	25-42350-107	• HINGE, HALF LH, ALTERED FROM GOVERNMENT STANDARD PART NO. MS20001PH5-1042	1	
	25-42350-108	• HINGE, HALF RH, ALTERED FROM GOVERNMENT STANDARD PART NO. MS20001PH5-1042	1	
- 42	25-42363- 3	• LOCK, MAIN LANDING GEAR FORK FORWARD DOOR	1	
		ATTACHING PARTS		
	AN509-10R17	• SCREW	1	
	AN960D10	• WASHER	1	
	AN364-1032	• NUT	1	
	AN509-10R12	• SCREW	2	
	AN960D10	• WASHER	2	
	AN364-1032	• NUT	2	
		¤----¤-¤-¤----¤		

FIGURE & INDEX NUMBER	PART NUMBER	1 2 3 4 5 6 7 DESCRIPTION	UNITS PER ASS'Y	USABLE ON CODE
182 -	25-42350- 3	DOOR ASSY, MAIN LANDING GEAR FORK CENTER LH, SEE FIG. 178-2 FOR NEXT HIGHER ASSY	REF	
	25-42350- 4	DOOR ASSY, MAIN LANDING GEAR FORK CENTER RH, SEE FIG. 178-2 FOR NEXT HIGHER ASSY	REF	
- 43	25-42362- 7	. PIN, MAIN LG FORK DOOR ATTACHING HINGE, ALTERED FROM GOVT STANDARD PART NUMBER AN253-2-1234	1	
- 44	25-42362- 9	. PIN, MAIN LG FORK DOOR ATTACHING HINGE, ALTERED FROM GOVT STANDARD PART NUMBER AN253-2-1592	1	
- 45	25-42350-155	. HINGE, HALF LH, ALTERED FROM GOVERNMENT STANDARD PART NO. MS20001PH5-1042	1	
	25-42350-156	. HINGE, HALF RH, ALTERED FROM GOVERNMENT STANDARD PART NO. MS20001PH5-1042	1	
		ATTACHING PARTS		
	AN509-10R10	. SCREW	9	
	AN960D10	. WASHER	9	
	AN364-1032	. NUT	9	
		¤----¤-¤-¤----¤		
- 46	25-42365- 5	. HINGE, HALF LH, ALTERED FROM GOVERNMENT STANDARD PART NO. MS20001PH6-1400	1	
	25-42365- 6	. HINGE, HALF RH, ALTERED FROM GOVERNMENT STANDARD PART NO. MS20001PH6-1400	1	
		ATTACHING PARTS		
	AN509-10R10	. SCREW	12	
	AN960D10	. WASHER	12	
	AN364-1032	. NUT	12	
		¤----¤-¤-¤----¤		
	25-42350- 5	DOOR ASSY, MAIN LANDING GEAR FORK AFT LH, SEE FIG. 178-4 FOR NEXT HIGHER ASSY	REF	
	25-42350- 6	DOOR ASSY, MAIN LANDING GEAR FORK AFT RH, SEE FIG. 178-4 FOR NEXT HIGHER ASSY	REF	
		ATTACHING PARTS		
- 47	NAS464-6A16	BOLT	2	
	AN960PD616	WASHER	4	
	AN364-624	NUT	2	
- 48	NAS464-6A15	BOLT	2	
	AN960PD616	WASHER	4	
	AN364-624	NUT	2	
		¤----¤-¤-¤----¤		
- 49	25-42357- 1	. SUPPORT ASSY, FORK DOOR AFT INBD	1	
- 50	25-42358- 1	. SUPPORT ASSY, FORK DOOR AFT OUTBD	1	
		ATTACHING PARTS		
- 51	AN4-10A	. BOLT	8	
	AN960PD416	. WASHER	8	
		¤----¤-¤-¤----¤		
	25-42361- 3	. . PLATE, FORK DOOR AFT INBD & OUTBD	1	
	25-42350- 87	. PLATE	2	
- 52	25-42350- 91	. SHIM	AR	
- 53	25-42350-109	. HINGE, HALF LH, ALTERED FROM GOVERNMENT STANDARD PART NO. MS20001PH5-1400	1	
	25-42350-110	. HINGE, HALF RH, ALTERED FROM GOVERNMENT STANDARD PART NO. MS20001PH5-1400	1	

Alighting Gear

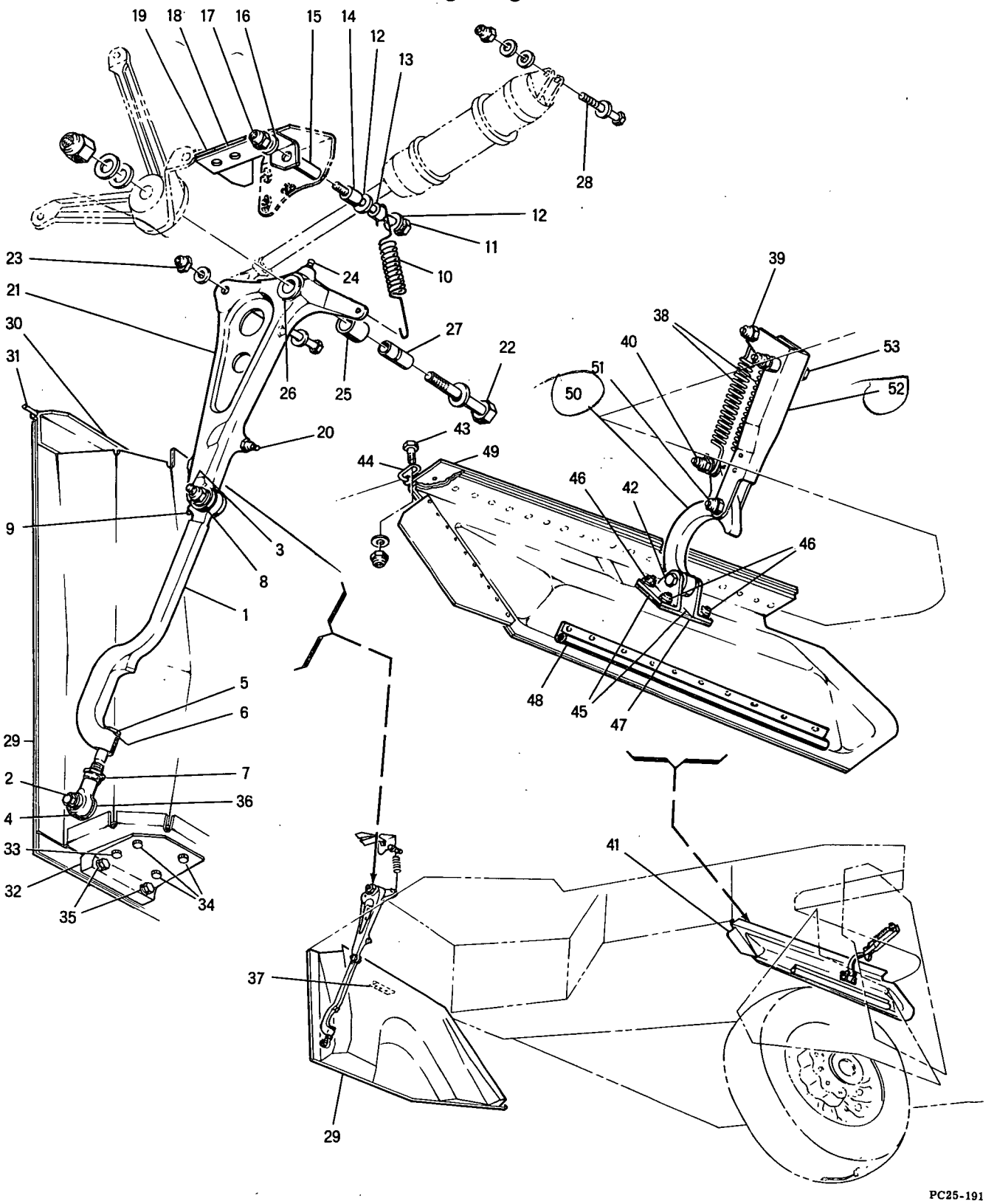

Figure 183 -- Main Landing Gear Inboard and Drag Brace Door Mechanism Assemblies

FIGURE & INDEX NUMBER	PART NUMBER	1 2 3 4 5 6 7 DESCRIPTION	UNITS PER ASS'Y	USABLE ON CODE
183 -	25-42300- 1	MECHANISM ASSY, MAIN LANDING GEAR INBOARD DOOR LH, SEE FIG. 178-81 FOR NEXT HIGHER ASSY	REF	
	25-42300- 2	MECHANISM ASSY, MAIN LANDING GEAR INBOARD DOOR RH, SEE FIG. 178-81 FOR NEXT HIGHER ASSY	REF	
- 1	25-42312- 1	• ARM ASSY, MAIN LG INBOARD DOOR MECHANISM	1	
		ATTACHING PARTS		
- 2	AN6-17A	• BOLT	1	
	4M36-03003	• WASHER (MDA)	1	
	AN960-616	• WASHER	1	
- 3	NAS464-5A15	• BOLT	1	
	AN960D516L	• WASHER	1	
	AN960D516	• WASHER	2	
	AN364-524	• NUT	1	
		¤----¤-¤-¤----¤		
- 4	BRE6070L	• • BEARING, ROD END (SWPC)	1	
		ATTACHING PARTS		
- 5	25-42309- 5	• • BOLT, ARM OPERATING INBD DOOR MECHANISM	1	
- 6	AN960D616	• • WASHER	2	
- 7	AN316-6R	• • NUT	1	
		¤----¤-¤-¤----¤		
- 8	BLR5000G-C	• • BEARING (SWPC)	1	
- 9	NAS497	• • FITTING, LUB	1	
- 10	25-42313- 3	• SPRING, MAIN LG INBD DOOR MECHANISM EXTENSION	1	
- 11	AN4-32A	• BOLT	1	
- 12	4M36-02001	• WASHER (MDA)	2	
- 13	NAS43C4-12	• SPACER	1	
- 14	NAS43C4-47	• SPACER	1	
- 15	NAS43C4-104	• SPACER	1	
- 16	AN960D416	• WASHER	1	
- 17	AN365-428	• NUT	1	
- 18	25-41057- 3	• SUPPORT, MAIN LG INBD DOOR MECHANISM SPRING LH	1	
	25-41057- 4	• SUPPORT, MAIN LG INBD DOOR MECHANISM SPRING RH	1	
- 19	25-32168- 3	• STOP, MAIN LG DOOR MECHANISM LH	1	
	25-32168- 4	• STOP, MAIN LG DOOR MECHANISM RH	1	
- 20	3M6-3-6	• BOLT, LIMIT SWITCH ADJUSTMENT (MDA)	1	
	AN960D516	• WASHER	AR	
	AN365-1032	• NUT	1	
- 21	25-42310- 1	• BELL CRANK ASSY, MAIN LANDING GEAR INBD DOOR MECHANISM LH	1	
	25-42310- 2	• BELL CRANK ASSY, MAIN LANDING GEAR INBD DOOR MECHANISM RH	1	
		ATTACHING PARTS		
- 22	AN10-32A	• BOLT	1	
	AN960D1016	• WASHER	3	
	AN365-1018	• NUT	1	
- 23	AN5-12A	• BOLT	1	
	AN960D516L	• WASHER	1	
	AN960D516	• WASHER	1	
	AN365-524	• NUT	1	
		¤----¤-¤-¤----¤		
- 24	AN944-101	• • FITTING, LUB	1	
- 25	4M33P14-018	• • BUSHING (MDA)	1	
- 26	4M34P14-49	• • BUSHING (MDA)	1	
- 27	NAS72-10-104	• BUSHING	1	
- 28	AN4-13A	• BOLT	1	
	AN960D416L	• WASHER	1	
	AN960D416	• WASHER	2	
	AN365-428	• NUT	1	
- 29	25-42200- 1	• DOOR ASSEMBLY, MAIN LANDING GEAR INBOARD LH	1	
	25-42200- 2	• DOOR ASSEMBLY, MAIN LANDING GEAR INBOARD RH	1	
	25-42201- 15	• • HINGE ASSY, MAIN LG INBOARD DOOR LH	1	
	25-42201- 16	• • HINGE ASSY, MAIN LG INBOARD DOOR RH	1	
- 30	25-42201- 9	• • • HINGE, HALF LH	1	
	25-42201- 10	• • • HINGE, HALF RH	1	
- 31	25-42201- 19	• • • PIN, HINGE, ALTERED FROM GOVT STANDARD PART NO. AN253-5-1055	2	
- 32	25-42364- 4	• • LOCK, MAIN LANDING GEAR INBOARD DOOR FWD, LEFT SIDE	1	
	25-42364- 3	• • LOCK, MAIN LANDING GEAR INBOARD DOOR FWD, RIGHT SIDE	1	
		ATTACHING PARTS		
- 33	AN509-10R14	• • SCREW	1	
- 34	AN509-10R12	• • SCREW	3	
- 35	AN509-10R20	• • SCREW	2	
	AN960D10	• • WASHER	2	
	AN310-3	• • NUT	2	
		¤----¤-¤-¤----¤		

FIGURE & INDEX NUMBER	PART NUMBER	1 2 3 4 5 6 7 DESCRIPTION	UNITS PER ASS'Y	USABLE ON CODE
183 - 36	25-42202- 3	• • FITTING, MAIN LANDING GEAR INBOARD DOOR	1	
- 37	25-42201- 7	• PLATE ASSEMBLY, MAIN LANDING GEAR INBOARD DOOR	1	
		ATTACHING PARTS		
	AN509-10R11	• SCREW	3	
		¤----¤-¤-¤----¤		
	25-42450-301	MECHANISM ASSY, MAIN LANDING GEAR DRAG BRACE DOOR LH, SEE FIG. 178-80 FOR NEXT HIGHER ASSY	REF	
	25-42450-302	MECHANISM ASSY, MAIN LANDING GEAR DRAG BRACE DOOR RH, SEE FIG. 178-80 FOR NEXT HIGHER ASSY	REF	
- 38	25-42454- 3	• SPRING, MAIN LG DRAG BRACE DOOR EXTENSION	2	
		ATTACHING PARTS		
- 39	AN3-14A	• BOLT	1	
	NAS43-3-76	• SPACER	1	
	NAS43-6-52	• SPACER	1	
	AN364-1032	• NUT	1	
- 40	AN3-14A	• BOLT	1	
	NAS43-3-26	• SPACER	2	
	AN960D516	• WASHER	8	
	AN364-1032	• NUT	1	
		¤----¤-¤-¤----¤		
- 41	25-42400-301	• DOOR ASSEMBLY, MAIN LANDING GEAR DRAG BRACE LH	1	
	25-42400-302	• DOOR ASSEMBLY, MAIN LANDING GEAR DRAG BRACE RH	1	
		ATTACHING PARTS		
- 42	AN4-14A	• BOLT	1	
	NAS74A4-011	• BUSHING	1	
	AN960D416L	• WASHER	1	
	AN960D416	• WASHER	2	
	AN365-428	• NUT	1	
- 43	AN3-5A	• BOLT	1	
	AN960D10	• WASHER	1	
	AN364-1032	• NUT	1	
- 44	25-42450- 3	• PIN, HINGE, ALTERED FROM GOVERNMENT STANDARD PART NO. AN253-2-2025	1	
		¤----¤-¤-¤----¤		
- 45	25-42402- 5	• • ANGLE, MAIN LANDING GEAR DRAG BRACE	2	
		ATTACHING PARTS		
- 46	AN509-416R17	• • SCREW	4	
	AN960-416L	• • WASHER	4	
	AN365-428	• • NUT	4	
		¤----¤-¤-¤----¤		
- 47	25-42400- 23	• • SHIM, LAMINATED	3	
- 48	25-42400- 19	• • SEAL, SELECTED FROM 11M600 (MDA)	1	
- 49	25-42400- 21	• • HINGE, HALF LH, ALTERED FROM GOVT. STANDARD PART NO. MS20001PY6-1940	1	
	25-42400- 22	• • HINGE, HALF RH, ALTERED FROM GOVT. STANDARD PART NO. MS20001PY6-1940	1	
- 50	25-42451- 1	• LINK ASSEMBLY, DRAG BRACE DOOR	1	
		ATTACHING PARTS		
- 51	AN4-13A	• BOLT	1	
	AN960D416L	• WASHER	1	
	NAS74A4-011	• BUSHING	1	
	AN960D416	• WASHER	2	
	AN365-428	• NUT	1	
		¤----¤-¤-¤----¤		
	4M34-7-15	• • BUSHING (MDA)	4	
- 52	25-42452-301	• CRANK ASSY, MAIN LANDING GEAR DRAG BRACE DOOR	1	
		ATTACHING PARTS		
- 53	AN4-26A	• BOLT	1	
	NAS72-4-200	• BUSHING	1	
	AN960D416L	• WASHER	1	
	AN960D416	• WASHER	2	
	AN365-428	• NUT	1	
		¤----¤-¤-¤----¤		

FIGURE & INDEX NUMBER	PART NUMBER	1 2 3 4 5 6 7 DESCRIPTION	UNITS PER ASS'Y	USABLE ON CODE
184 -	25-45000- 1	GEAR INSTL, NOSE LANDING, SEE FIG. 1-13 FOR NEXT HIGHER ASSEMBLY	1	A
	25-45000-301	GEAR INSTL, NOSE LANDING, SEE FIG. 1-13 FOR NEXT HIGHER ASSEMBLY	1	B-F
- 1	25-46100- 2	• DOOR ASSY, NOSE LANDING GEAR RH, SEE FIG. 168	1	
	25-46100- 1	• DOOR ASSY, NOSE LANDING GEAR LH, FOR FUTURE PROCUREMENT USE 25-46100-301, SEE FIG. 188	1	A
	25-46100-301	• DOOR ASSY, NOSE LANDING GEAR LH, USE FOR FUTURE PROCUREMENT TO REPLACE 25-46100-1 SEE FIG. 188	1	
		ATTACHING PARTS		
- 2	AN175-25A	• BOLT	2	
	AN960D516	• WASHER	2	
	NAS72-5-105	• BUSHING	2	
- 3	AN175-20A	• BOLT	2	
	AN960D516	• WASHER	6	
	NAS72-5-103	• BUSHING	2	
	AN365-524	• NUT	2	
- 4	AN24-14	• BOLT	2	
	AN960D416L	• WASHER	2	
	AN320-4	• NUT	2	
	AN380-2-4	• PIN, COTTER	2	
		¤----¤-¤-¤-----¤		
- 5	25-69019-301	• CYLINDER ASSY, NOSE LG ACTUATOR, SEE FIG. 186	1	
		ATTACHING PARTS		
- 6	AN4-27A	• BOLT	1	
	AN960D416	• WASHER	2	
	AN364-428	• NUT	1	
- 7	25-45015- 3	• PIN, NOSE LANDING GEAR ACTUATOR ATTACHING	1	
- 8	AN364-624	• NUT	1	
	4M36-03020	• WASHER (MDA)	1	
		¤----¤-¤-¤-----¤		
- 9	25-45029- 1	• LINK ASSY, NOSE LG SHRINK, LEFT SIDE	1	
- 10	25-45024- 1	• LINK ASSY, NOSE LG SHRINK, RIGHT SIDE	1	
		ATTACHING PARTS		
- 11	AN397-31	• PIN, FLAT HEAD	2	
	AN960-716	• WASHER	4	
	AN380-3-4	• PIN, COTTER	2	
- 12	NAS464-7A38	• BOLT	2	
	AN960-716	• WASHER	6	
	AN364-720	• NUT	2	
		¤----¤-¤-¤-----¤		
- 13	MS15001-1	• • FITTING, LUB	1	
- 14	25-45029- 9	• • BEARING ASSY, LEFT SIDE	1	
- 15	25-45024- 9	• • BEARING ASSY, RIGHT SIDE	1	
	25-45029- 7	• • • BUSHING, ALTERED FROM 4M34-6-48 (MDA)	1	
	25-45024- 7	• • • BUSHING, ALTERED FROM 4M34-6-48 (MDA)	1	
	BLN8003G-C	• • • BEARING (SWPC)	1	
- 16	25-45031- 3	• • ROD END, NOSE LG SHRINK LINK UPPER	1	
- 17	AN316-7R	• • NUT	1	
- 18	25-45032- 3	• • BOLT, NOSE LANDING GEAR SHRINK LINK EYE	1	
- 19	25-45017- 3	• SPRING, NOSE LG LOCK LINK OVERCENTER EXTENSION	2	
- 20	25-45018- 3	• CLIP, NOSE LANDING GEAR SPRING ATTACHING EYE	3	
- 21	25-45051- 5	• CLIP, NOSE LANDING GEAR SPRING ATTACHING EYE & CLAMP MOUNTING	1	
- 22	25-45040- 1	• LINK ASSY, NOSE LANDING GEAR DOOR RETRACTING	2	
		ATTACHING PARTS		
- 23	AN26-14	• BOLT	2	
	AN960-616L	• WASHER	2	
	AN320-6	• NUT	2	
	AN380-3-4	• PIN, COTTER	2	
		¤----¤-¤-¤-----¤		
- 24	25-45039- 3	• • ROD END, NOSE LG DOOR LINK ADJUSTING	1	
- 25	25-45038- 3	• • ROD END, NOSE LG DOOR LINK ADJUSTING	1	
- 26	AN47-25	• BOLT, EYE	2	
	AN960-716L	• WASHER	2	
	AN960-716	• WASHER	2	
	AN310-7	• NUT	2	
	AN380-3-5	• PIN, COTTER	2	
- 27	25-45049- 3	• RING, NOSE LG TIEDOWN, ALTERNATE 25-45048-3	1	
- 28	25-45020- 1	• LINK ASSY, NOSE LANDING GEAR DRAG BRACE, SEE FIG. 189	1	
		ATTACHING PARTS		
- 29	NAS464-14A93	• BOLT	1	
	AN960-1416	• WASHER	2	
	NAS72-14-013	• BUSHING	2	
	AN364-1414	• NUT	1	

Alighting Gear

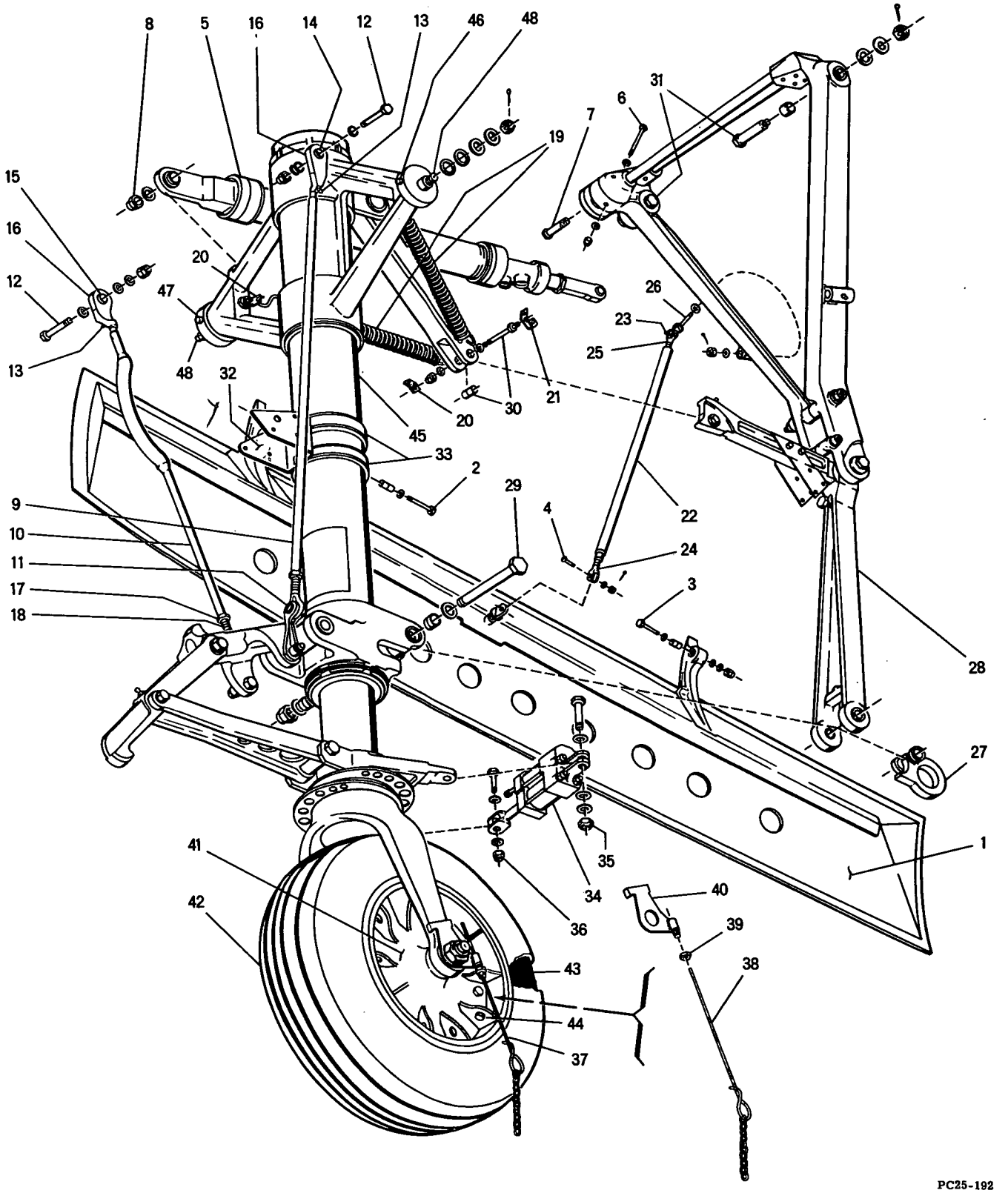

Figure 184 - Nose Landing Gear Installation

FIGURE & INDEX NUMBER	PART NUMBER	1 2 3 4 5 6 7 DESCRIPTION	UNITS PER ASS'Y	USABLE ON CODE
184 -		ATTACHING PARTS (CONT)		
- 30	25-45016- 3	• BOLT, NOSE LANDING GEAR LOCK LINK CENTER	1	
	4M36-05001	• WASHER (MDA)	1	
	NAS72-8-011	• BUSHING	1	
	AN960D816	• WASHER	2	
	AN364-820	• NUT	1	
- 31	25-45037- 5	• PIN, NOSE LANDING GEAR DRAG BRACE ATTACHING	2	
	AN960-1416L	• WASHER	AR	
	4M36-04019	• WASHER (MDA)	2	
	AN320-8	• NUT	2	
	AN380-3-5	• PIN, COTTER	2	
		¤----¤-¤-¤----¤		
- 32	25-45026- 1	• BRACKET ASSY, NOSE LANDING GEAR APPROACH LIGHT	1	
- 33	326-62-481S	• • CLAMP (MAR)	2	
- 34	25-69040- 1	• DAMPER ASSY, NOSE LG SHIMMY, SEE FIG. 187	1	
		ATTACHING PARTS		
- 35	AN176-16A	• BOLT	1	
	AN960D616L	• WASHER	1	
	AN960D616	• WASHER	2	
	AN365-624	• NUT	1	
- 36	AN175-12A	• BOLT	1	
	AN960-516L	• WASHER	1	
	AN960-516	• WASHER	1	
	AN365-524	• NUT	1	
		¤----¤-¤-¤----¤		
- 37	25-45260- 1	• CHAIN ASSY, NOSE LANDING GEAR STATIC GROUND	1	
- 38	15-41230- 1	• • CHAIN ASSY, NOSE LG STATIC GROUND	1	
- 39	4-41206	• • NUT	1	
- 40	25-45260- 3	• • BRACKET ASSEMBLY, NOSE LG STATIC GROUND	1	
	25-45045- 1	• WHEEL & TIRE ASSY, NOSE LANDING GEAR	1	
- 41	9531013	• • WHEEL ASSY, NOSE LG (GY) TYPE PD638, ALTERNATE PART NO. G3-748 (GD) MCDONNELL SPEC 25-45004-1	1	
- 42	24X5.5	• • CASING, NOSE LG, MIL-C-5041, TYPE V11, 14 PLY (GY)	1	
- 43	24X5.5	• • TUBE, NOSE LG, MIL-T-5014A, TYPE V11 (GY)	1	
- 44	NO NUMBER	• • BOLT, AN3- A, LENGTH AS REQUIRED PER NUMBER OF 9M70-3 WASHERS USED	AR	
	9M70-3	• • WASHER (MDA)	AR	
	AN364-1032	• • NUT	AR	
- 45	25-45200- 1	• STRUT ASSY, NOSE LANDING GEAR, SEE FIG. 185	1	
		ATTACHING PARTS		
- 46	AN5-31A	• BOLT	1	
	AN960D516	• WASHER	2	
	AN364-524	• NUT	1	
- 47	AN5-44A	• BOLT	1	
	AN960D516	• WASHER	2	
	AN364-524	• NUT	1	
- 48	25-45013- 5	• PIN, NOSE LANDING GEAR TRUNNION ATTACHING	2	
	AN960-2116L	• WASHER	AR	
	4M36-07002	• WASHER (MDA)	4	
	AN320-12	• NUT	2	
	AN380-4-6	• PIN, COTTER	2	
		¤----¤-¤-¤----¤		

Alighting Gear

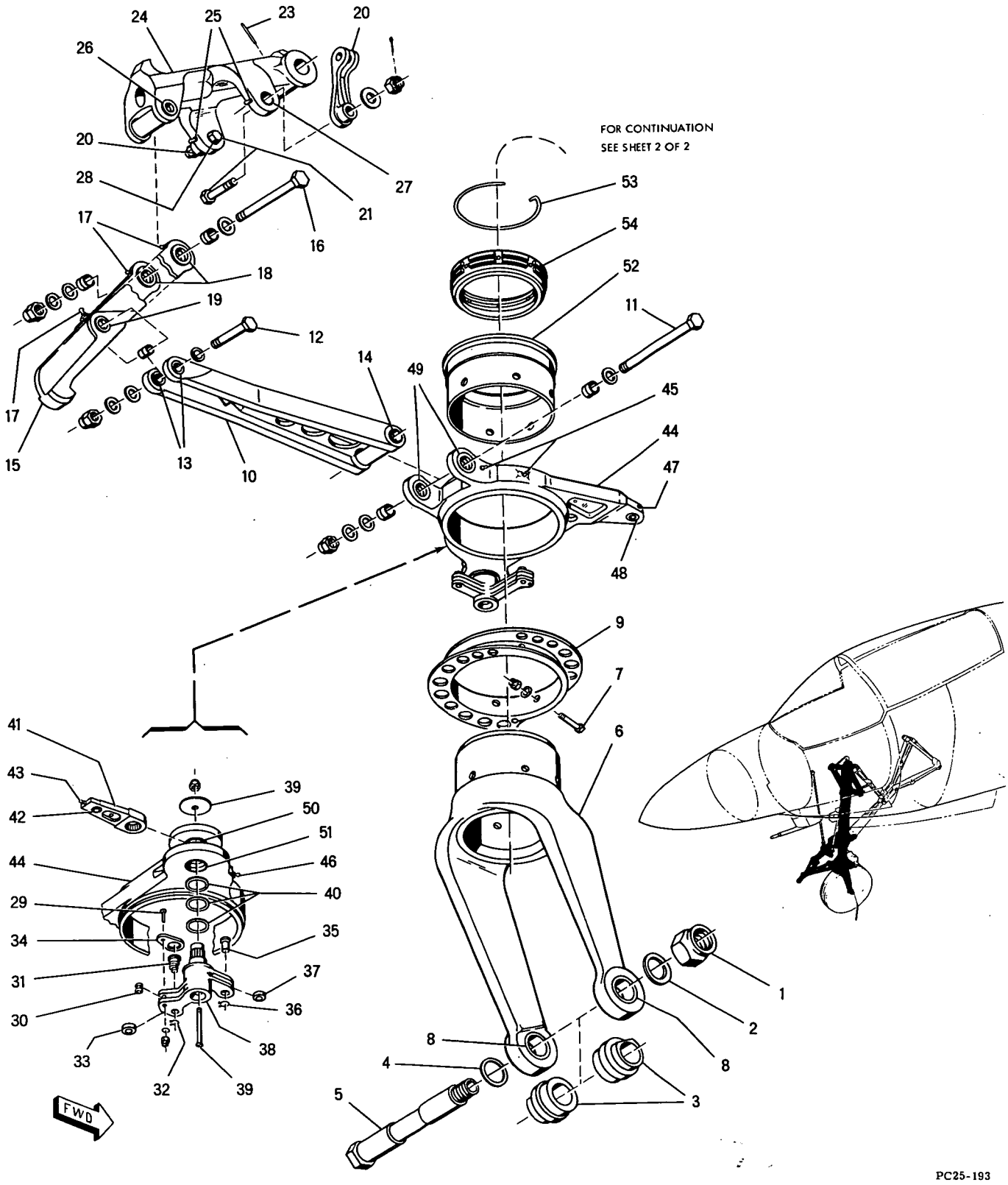

Figure 185 -- Nose Landing Gear Strut Assembly (Sheet 1 of 2)

Alighting Gear

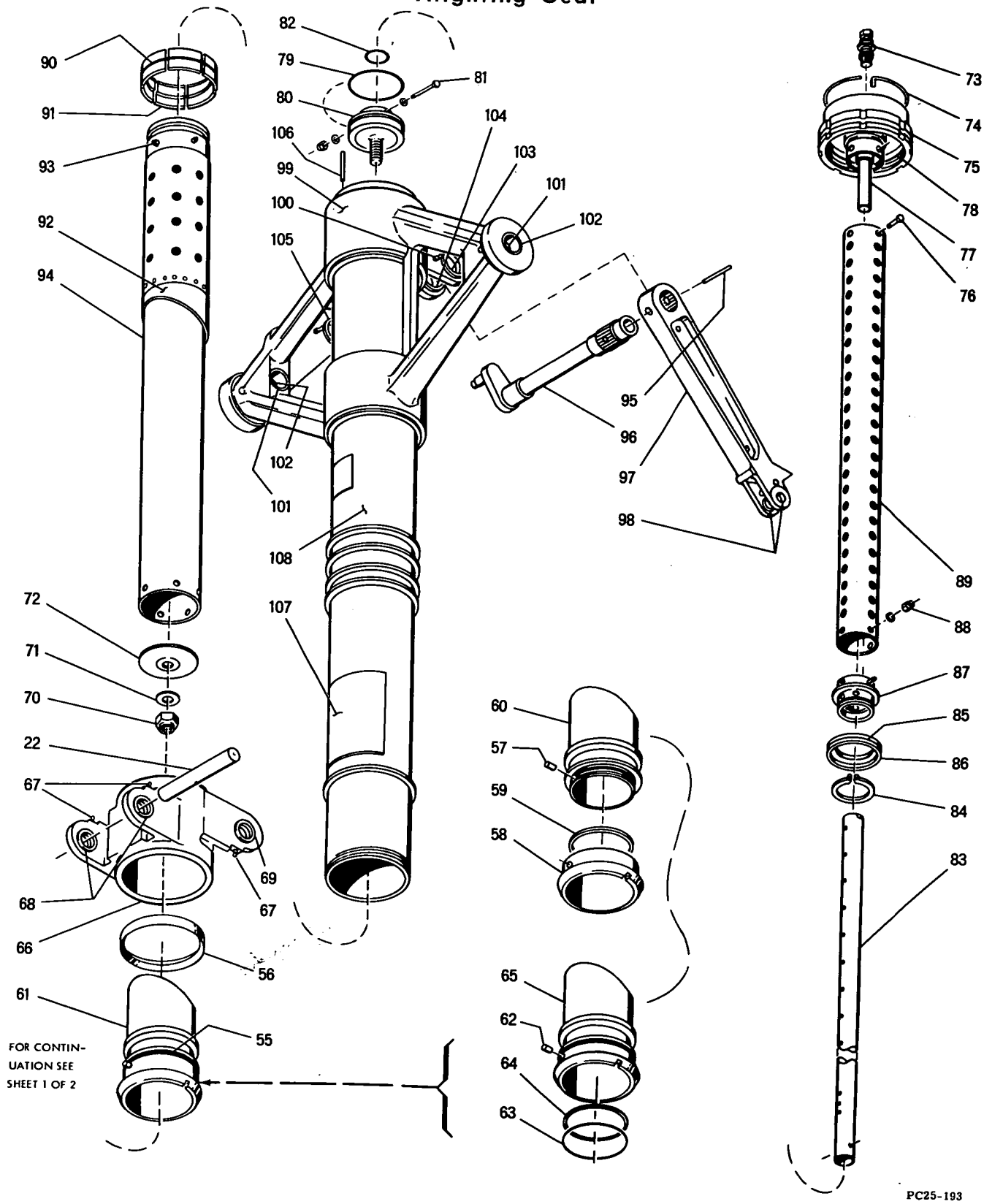

Figure 185 -- Nose Landing Gear Strut Assembly (Sheet 2 of 2)

FIGURE & INDEX NUMBER	PART NUMBER	1 2 3 4 5 6 7 DESCRIPTION	UNITS PER ASS'Y	USABLE ON CODE
185 -	25-45200- 1	STRUT ASSY, NOSE LANDING GEAR, SEE FIG. 184-45 FOR NEXT HIGHER ASSEMBLY	REF	
- 1	AN364-2012	• NUT	1	
- 2	AN960-2116	• WASHER	1	
- 3	25-45245- 3	• SPACER, NOSE LANDING GEAR AXLE	2	
- 4	AN960-2616L	• WASHER	1	
- 5	25-45246- 1	• AXLE ASSEMBLY, NOSE LANDING GEAR	1	
	25-45259- 3	• • BUSHING, NOSE LANDING GEAR AXLE	1	
- 6	25-45219- 1	• FORK ASSEMBLY, NOSE LANDING GEAR	1	
		ATTACHING PARTS		
- 7	NAS464-5A23	• BOLT	6	
	AN960-516	• WASHER	6	
	AN364-524	• NUT	6	
		¤----¤-¤-¤----¤		
- 8	4M33-26-031	• • BUSHING (MDA)	2	
- 9	25-45220- 3	• CAM, NOSE LANDING GEAR SHIMMY DAMPER	1	
- 10	25-45227- 1	• LINK ASSY, NOSE LANDING GEAR LOWER SCISSORS	1	
		ATTACHING PARTS		
- 11	AN180-61A	• BOLT	1	
	AN960-1016L	• WASHER	1	
	NAS72-10-011	• BUSHING	2	
	AN960-1016	• WASHER	2	
	AN365-1018	• NUT	1	
- 12	AN178-25A	• BOLT	1	
	AN960D816L	• WASHER	1	
	NAS72-8-013	• BUSHING	1	
	AN960D816	• WASHER	2	
	AN365-820	• NUT	1	
		¤----¤-¤-¤----¤		
- 13	4M34-8-42	• • BUSHING (MDA)	2	
- 14	4M34-10-50	• • BUSHING (MDA)	2	
- 15	25-45228- 1	• LINK ASSY, NOSE LANDING GEAR MIDDLE SCISSORS	1	
		ATTACHING PARTS		
- 16	AN180-46A	• BOLT	1	
	AN960-1016L	• WASHER	1	
	NAS72-10-009	• BUSHING	2	
	AN960-1016	• WASHER	2	
	AN365-1018	• NUT	1	
		¤----¤-¤-¤----¤		
- 17	AN944-101	• • FITTING, LUB	3	
- 18	4M34P14-14	• • BUSHING (MDA)	4	
- 19	4M34P11-29	• • BUSHING (MDA)	2	
- 20	25-45033- 3	• LINK, NOSE LANDING GEAR ATTACHING	2	
		ATTACHING PARTS		
- 21	25-45034- 3	• BOLT, NOSE LANDING GEAR LINK ATTACHING	2	
	4M36-03004	• WASHER (MDA)	2	
	AN320C6	• NUT	2	
	AN381-3-12	• PIN, COTTER	2	
		¤----¤-¤-¤----¤		
- 22	25-45255- 3	• PIN, NOSE LANDING GEAR UPPER SCISSORS ATTACHING	1	
		ATTACHING PARTS		
- 23	79-048-250-1500	• PIN, ROLL (EN)	1	
		¤----¤-¤-¤----¤		
- 24	25-45229- 1	• LINK ASSY, NOSE LANDING GEAR UPPER SCISSORS	1	
- 25	AN944-101	• • FITTING, LUB	2	
- 26	4M34-10-50	• • BUSHING (MDA)	2	
- 27	4M33P10-007	• • BUSHING (MDA) OUTER	2	
- 28	4M34P10-22	• • BUSHING (MDA) INNER	2	
- 29	AN509-10R23	• SCREW	1	
	AN960-10L	• WASHER	1	
	AN364-1032	• NUT	1	
- 30	NAS73-3-006	• BUSHING	1	
- 31	25-45231- 3	• PIN, NOSE LANDING GEAR ADJUSTING CAM FOLLOWER ROLLER	1	
- 32	NAS51-37	• RING, EXT RETAINER	1	
- 33	25-45232- 3	• ROLLER, NOSE LANDING GEAR SHIMMY DAMPER CAM FOLLOWER	1	
- 34	25-45261- 3	• PLATE, NOSE LANDING GEAR SHIMMY DAMPER CAM FOLLOWER LOCK	1	
- 35	25-45262- 3	• PIN, NOSE LANDING GEAR SWIVEL CAM ROLLER	1	
- 36	NAS51-50	• RING, EXT RETAINER	1	
- 37	25-45232- 3	• ROLLER, NOSE LANDING GEAR SHIMMY DAMPER CAM FOLLOWER	1	

FIGURE & INDEX NUMBER	PART NUMBER	1 2 3 4 5 6 7 DESCRIPTION	UNITS PER ASS'Y	USABLE ON CODE
185 - 38	25-45230- 3	• CRANK, NOSE LANDING GEAR SHIMMY DAMPER CAM FOLLOWER	1	
		ATTACHING PARTS		
- 39	AN509-416R41	• SCREW	1	
	4M36-02037	• WASHER (MDA)	1	
	AN365-428	• NUT	1	
		¤----¤-¤-¤----¤		
- 40	4M36-11009	• WASHER (MDA)	3	
- 41	25-45226- 1	• ARM ASSEMBLY, SHIMMY DAMPER SUPPORT	1	
- 42	BLR5000G-C	• • BEARING (SWPC)	1	
- 43	NAS497	• • FITTING, LUB	1	
- 44	25-45223- 1	• BRACKET ASSY, NOSE LANDING GEAR SHIMMY DAMPER	1	
- 45	AN944-101	• • FITTING, LUB	4	
- 46	AN944-103	• • FITTING, LUB	2	
- 47	NAS497	• • FITTING, LUB	1	
- 48	BLR6000A-G-C	• • BEARING (SWPC)	1	
- 49	4M34P14-25	• • BUSHING (MDA)	4	
- 50	4M33P16-006	• • BUSHING (MDA)	2	
- 51	4M33P18-009	• • BUSHING (MDA)	2	
- 52	25-45221- 3	• BUSHING, NOSE LANDING GEAR SHIMMY DAMPER BKT RETAINER	1	
- 53	25-45250- 5	• RING, NOSE LANDING GEAR RETAINING LOCK	1	
- 54	25-45235- 3	• NUT, NOSE LANDING GEAR BEARING	1	
- 55	AN6227B50	• PACKING, O RING	1	
- 56	25-45269- 3	• PACKING, LANDING GEAR SHOCK STRUT SPECIAL	1	
	25-45209- 1	• BEARING ASSY, NOSE LANDING GEAR LOWER CYLINDER ALTERNATE FOR 25-45267-1	1	
- 57	25-45257- 3	• • PIN, NOSE LANDING GEAR LOWER BEARING DOWEL	1	
- 58	25-45266- 3	• • NUT, NOSE LANDING GEAR BEARING RETAINING	1	25-45209-1
- 59	AN6231A36	• • SCRAPER	1	
- 60	25-45209- 5	• • BEARING	1	25-45209-1
- 61	25-45267- 1	• BEARING ASSY, NOSE LANDING GEAR LOWER CYLINDER USE FOR FUTURE PROCUREMENT TO REPLACE 25-45209-1	1	
- 62	25-45257- 3	• • PIN, NOSE LANDING GEAR LOWER BEARING DOWEL	1	
- 63	25-45268- 3	• • RING, NOSE LANDING GEAR STRUT SCRAPER RETAINING	1	25-45267-1
- 64	AN6231A36	• • SCRAPER	1	
- 65	25-45267- 3	• • BEARING	1	25-45267-1
- 66	25-45214- 1	• SOCKET ASSY, NOSE LANDING GEAR DRAG BRACE	1	
- 67	AN944-101	• • FITTING, LUB	4	
- 68	4M34P14-27	• • BUSHING (MDA)	4	
- 69	4M34P18-27	• • BUSHING (MDA)	4	
- 70	AN365-1018	• NUT	1	
- 71	AN960D1016	• WASHER	1	
- 72	25-45243- 3	• WASHER, NOSE LANDING GEAR METERING TUBE	1	
- 73	AN6287-1	• VALVE ASSEMBLY, HIGH PRESSURE AIR	1	
- 74	25-45250- 3	• RING, NOSE LANDING GEAR RETAINING LOCK	1	
- 75	25-45244- 1	• HEAD ASSY, NOSE LANDING GEAR CYLINDER	1	
		ATTACHING PARTS		
- 76	AN3H5A	• BOLT	4	
		¤----¤-¤-¤----¤		
- 77	25-45238- 5	• • PIPE, NOSE LANDING GEAR STAND	1	
- 78	AN6230B25	• GASKET, O RING	1	
- 79	AN6227B40	• PACKING, O RING	1	
- 80	25-45239- 3	• SUPPORT, NOSE LANDING GEAR METERING TUBE	1	
		ATTACHING PARTS		
- 81	AN3-20A	• BOLT	1	
	AN960D10L	• WASHER	1	
	AN960D10	• WASHER	1	
	AN364-1032	• NUT	1	
		¤----¤-¤-¤----¤		
- 82	AN6227B23	• PACKING, O RING	1	
- 83	25-45211- 5	• TUBE, NOSE LANDING GEAR METERING	1	
- 84	NAS51-237	• RING, EXT RETAINER	1	
- 85	2355A	• RING, COMPRESSION (KPRD)	1	
- 86	25-45242- 3	• VALVE, NOSE LANDING GEAR PISTON	1	
- 87	25-45241- 3	• PISTON, NOSE LANDING GEAR SHOCK	1	
		ATTACHING PARTS		
- 88	NAS464-3A5	• BOLT	4	
	AN960D10	• WASHER	4	
	AN364-1032	• NUT	4	
		¤----¤-¤-¤----¤		
- 89	25-45210- 3	• TUBE, NOSE LANDING GEAR ORIFICE	1	
- 90	AN6230B20	• GASKET, O RING	1	

FIGURE & INDEX NUMBER	PART NUMBER	1 2 3 4 5 6 7 DESCRIPTION	UNITS PER ASS'Y	USABLE ON CODE
185 - 91	25-45208- 3	• BEARING, NOSE LANDING GEAR UPPER	6	
- 92	25-45249- 1	• CAM ASSY, NOSE LANDING GEAR UPPER CENTERING	1	
		ATTACHING PARTS		
- 93	25-45263- 3	• SCREW, NOSE LANDING GEAR CAM ATTACHING	4	
	AN960D10L	• WASHER	4	
	AN364-1032	• NUT	4	
		¤----¤-¤-¤----¤		
- 94	25-45204- 5	• CYLINDER, NOSE LANDING GEAR INNER	1	
- 95	79-048-250-2750	• PIN, ROLL (EN)	1	
- 96	25-45218- 7	• TUBE, NOSE LANDING GEAR LOCK LINK TORQUE	1	
- 97	25-45011- 1	• LINK ASSY, NOSE LANDING GEAR UPPER LOCK	1	
- 98	4M34-8-32	• • BUSHING (MDA)	2	
- 99	25-45222- 1	• TRUNNION ASSY, NOSE LANDING GEAR	1	
-100	AN944-101	• • FITTING, LUB	3	
-101	4M34-18-140	• • BUSHING (MDA)	2	
-102	4M33-18-113	• • BUSHING (MDA)	2	
-103	4M34P22-19	• • BUSHING (MDA)	2	
-104	4M34P24-19	• • BUSHING (MDA)	2	
-105	4M34P24-25	• • BUSHING (MDA)	2	
-106	25-45265- 3	• KEY, NOSE LANDING GEAR TRUNNION TORQUE	1	
-107	25-89052- 5	• PLATE, NOSE LANDING GEAR NAME & INSTRUCTION	1	
-108	25-45201- 3	• CYLINDER, NOSE LANDING GEAR OUTER	1	

Alighting Gear

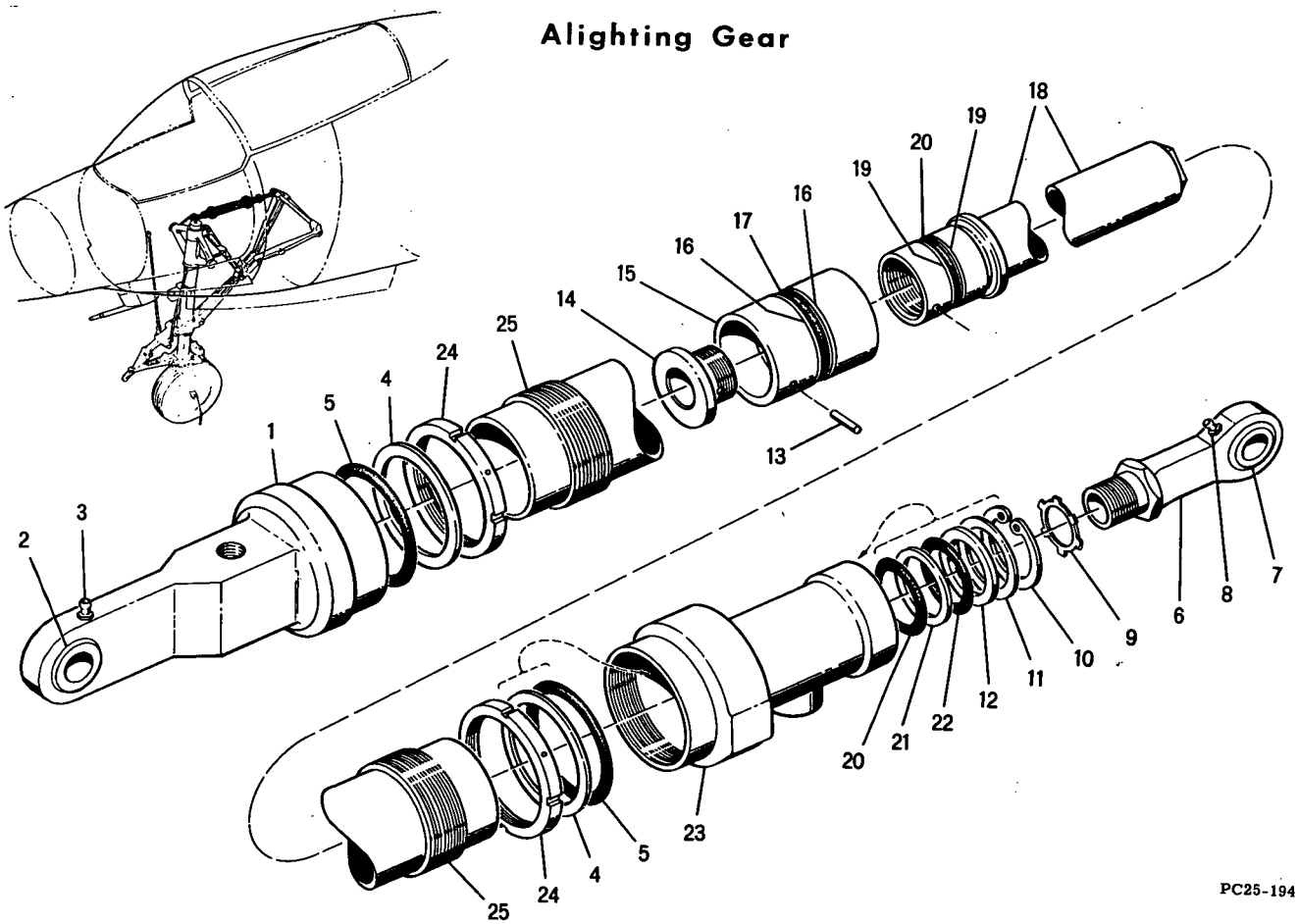

Figure 186 -- Nose Landing Gear Actuating Cylinder Assembly

FIGURE & INDEX NUMBER	PART NUMBER	1 2 3 4 5 6 7 DESCRIPTION	UNITS PER ASS'Y	USABLE ON CODE
186 -	25-69019-301	CYLINDER ASSEMBLY, NOSE LANDING GEAR ACTUATING, SEE FIG. 184-5 FORNEXT HIGHER ASSEMBLY	REF	
- 1	25-69122- 5	• CAP ASSY, NOSE LANDING GEAR HYDRAULIC ACTUATOR	1	
- 2	BLN12003G-C	• • BEARING (SWPC)	1	
- 3	MS15001-1	• • FITTING, LUB	1	
- 4	AN6246-37	• RING, BACK UP	2	
- 5	AN6227B37	• PACKING, O RING	2	
- 6	25-69092- 7	• ROD END ASSEMBLY, NOSE GEAR ACTUATOR	1	
- 7	BLN10003G-C	• • BEARING (SWPC)	1	
- 8	AN944-101	• • FITTING, LUB	1	
- 9	25-69095- 3	• WASHER, NOSE GEAR ACTUATOR, TAB TYPE	1	
- 10	NAS50-206	• RING, INTERNAL RETAINER	1	
- 11	4M36-15001	• WASHER (MDA)	1	
- 12	AN6231A17	• SCRAPER	1	
- 13	COMM	• PIN, GROOV, 3/32DIAX3/8 TYPE 3 (GVP)	1	
- 14	25-69096- 3	• STOP, NOSE GEAR ACTUATOR PISTON SLEEVE	1	
- 15	25-69090- 3	• SLEEVE, NOSE GEAR ACTUATOR PISTON	1	
- 16	6144-31	• RING, BACK UP (SHWS)	2	
- 17	AN6227B31	• PACKING, O RING	1	
- 18	25-69089- 15	• PISTON ASSEMBLY, NOSELANDING GEAR ACTUATOR	1	
	AN932U1	• • PLUG	1	
- 19	AN6246-27	• RING, BACK UP	2	
- 20	AN6227B27	• PACKING, O RING	2	
- 21	6144-27	• RING, BACK UP (SHWS)	1	
- 22	AN6232C5-1/8	• FELT, STRIP PACKING	1	
- 23	25-69087- 5	• CAP, NOSE LANDING GEAR HYDRAULIC ACTUATOR	1	
- 24	25-69091- 3	• LOCKNUT, NOSE LANDING GEAR ACTUATOR CAP	2	
- 25	25-69088- 3	• BARREL, NOSE GEAR ACTUATOR	1	

Alighting Gear

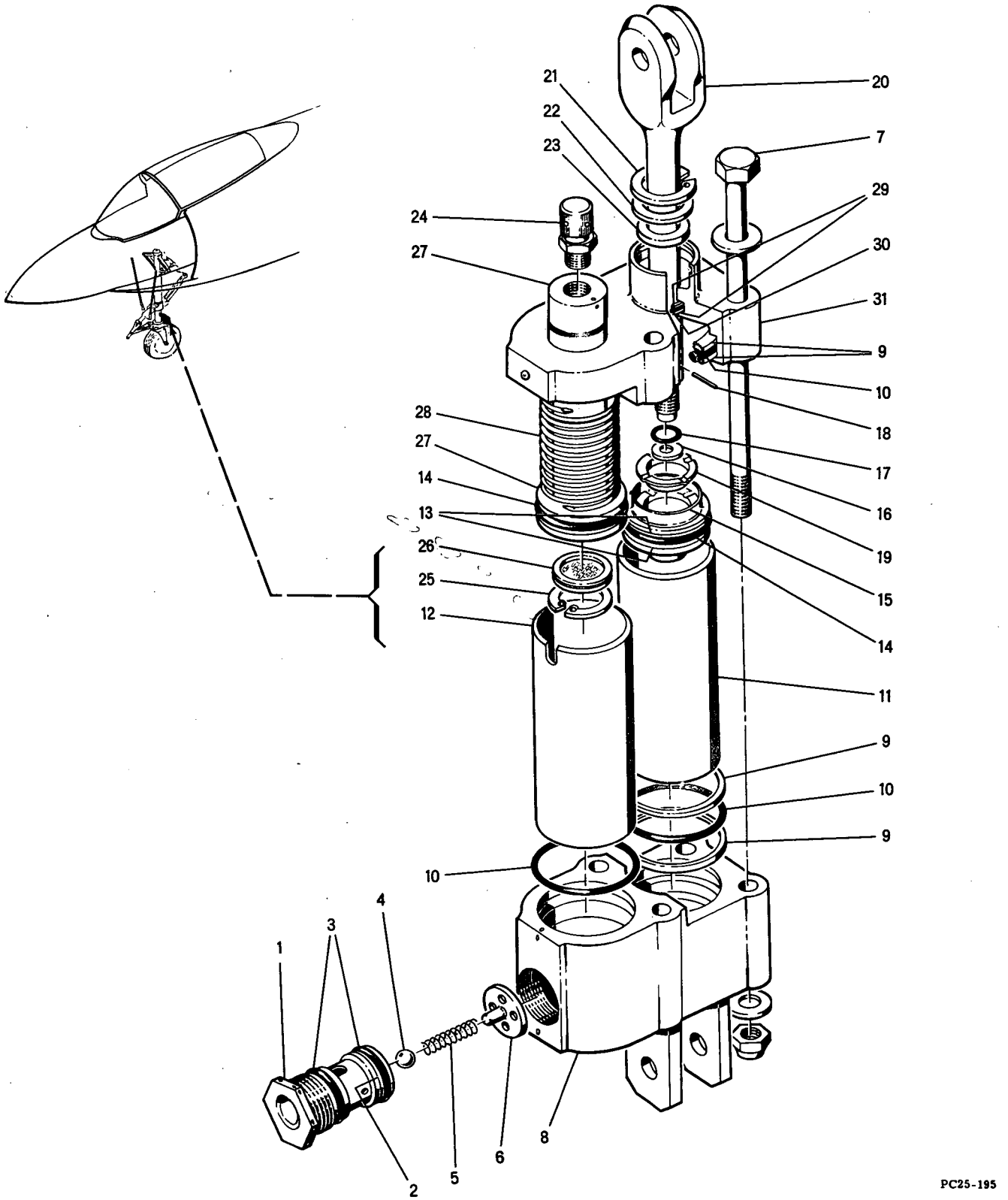

Figure 187 - Nose Landing Gear Shimmy Damper Assembly

FIGURE & INDEX NUMBER	PART NUMBER	1 2 3 4 5 6 7 DESCRIPTION	UNITS PER ASS'Y	USABLE ON CODE
187 -	25-69040- 1	DAMPER ASSEMBLY, NOSE LANDING GEAR SHIMMY, SEE FIG. 184-34 FOR NEXT HIGHER ASSEMBLY	REF	
- 1	19-45167- 3	• ORIFICE, SHIMMY DAMPER RESERVOIR	1	
- 2	AN6246-11	• RING, BACK UP	1	
- 3	AN6227B11	• PACKING, O RING	2	
- 4	AF216C2-16	• BALL, METAL	1	
- 5	19-45171- 3	• SPRING, SHIMMY DAMPER CHECK BALL COMPRESSION	1	
- 6	19-45166- 3	• RETAINER, SHIMMY DAMPER CHECK BALL SPRING	1	
- 7	AN4-53A	• BOLT	4	
	AN960D416	• WASHER	8	
	AN365-428	• NUT	4	
- 8	25-69158- 3	• END, SHIMMY DAMPER	1	
- 9	AN6246-25	• RING, BACK UP	4	
- 10	AN6227B25	• PACKING, O RING	3	
- 11	19-45164- 3	• TUBE, SHIMMY DAMPER CYLINDER	1	
- 12	19-45165- 3	• TUBE, SHIMMY DAMPER RESERVOIR	1	
- 13	6144-19	• RING, BACK UP (SHWS)	2	
- 14	AN6227B19	• PACKING, O RING	2	
- 15	19-45161- 5	• PISTON, SHIMMY DAMPER	1	
- 16	19-45162- 5	• ORIFICE, SHIMMY DAMPER	1	
- 17	AN6227B5	• PACKING, O RING	1	
- 18	19-45178- 3	• RETAINER, SHIMMY DAMPER	1	
- 19	19-45177- 3	• WASHER, SHIMMY DAMPER PISTON LOCK	1	
- 20	19-45163- 5	• ROD, SHIMMY DAMPER PISTON	1	
- 21	NAS50-87	• RING, INTERNAL RETAINER	1	
- 22	4M36-05005	• WASHER (MDA)	1	
- 23	AN6231A1	• SCRAPER	1	
- 24	19-45172-301	• FILLER ASSY, SHIMMY DAMPER, ALTERED FROM 1963 (AL)	1	
- 25	NAS50-81	• RING, INTERNAL RETAINER	1	
- 26	25-69150- 1	• STRAINER ASSY, SHIMMY DAMPER	1	
- 27	25-69149- 3	• PISTON, SHIMMY DAMPER	1	
- 28	19-45169- 3	• SPRING, SHIMMY DAMPER RESERVOIR COMPRESSION	1	
- 29	6144-10	• RING, BACK UP (SHWS)	2	
- 30	AN6227B10	• PACKING, O RING	1	
- 31	25-69157- 1	• CAP ASSY, SHIMMY DAMPER	1	

Alighting Gear

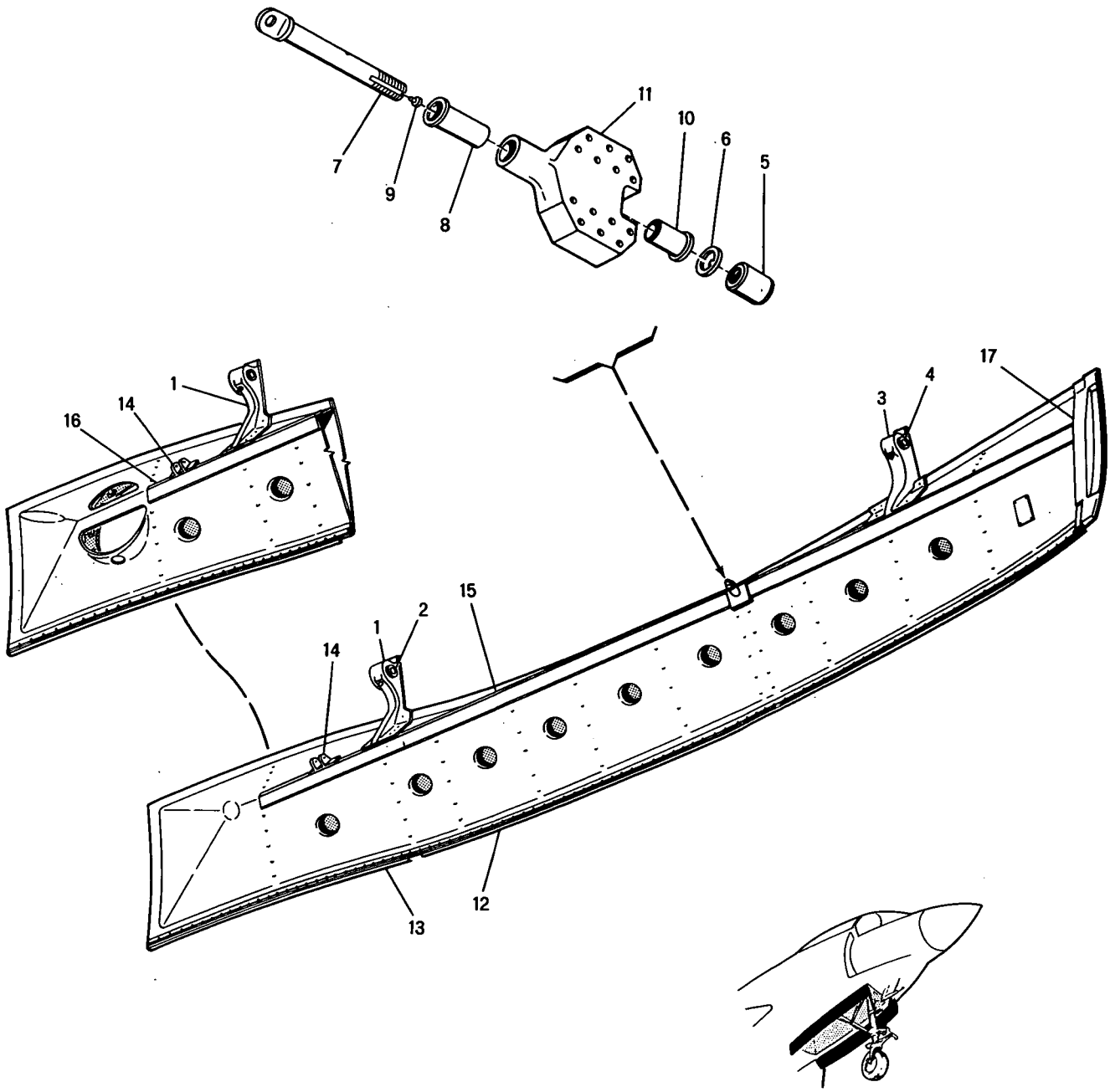

PC25-196

Figure 188 - Nose Landing Gear Door Assembly

FIGURE & INDEX NUMBER	PART NUMBER	1 2 3 4 5 6 7 DESCRIPTION	UNITS PER ASS'Y	USABLE ON CODE
188 -	25-46100- 1	DOOR ASSEMBLY, NOSE LANDING GEAR LH, FOR FUTURE PROCUREMENT USE 25-46100-301, SEE FIG. 184-1 FOR NEXT HIGHER ASSEMBLY	REF	A
	25-46100-301	DOOR ASSEMBLY, NOSE LANDING GEAR LH, USE FOR FUTURE PROCUREMENT TO REPLACE 25-46100-1 SEE FIG. 184-1 FOR NEXT HIGHER ASSEMBLY	REF	
	25-46100- 2	DOOR ASSEMBLY, NOSE LANDING GEAR RH, SEE FIG. 184-1 FOR NEXT HIGHER ASSEMBLY	REF	
- 1	25-46106- 1	. HINGE ASSEMBLY, NOSE LANDING GEAR DOOR AFT LH	1	
	25-46106- 2	. HINGE ASSEMBLY, NOSE LANDING GEAR DOOR AFT RH	1	
- 2	4M34P8-47	. . BUSHING (MDA)	2	
	MS15001-1	. . FITTING, LUB	1	
- 3	25-46105- 1	. HINGE ASSEMBLY, NOSE LANDING GEAR DOOR FWD, LH	1	
	25-46105- 2	. HINGE ASSEMBLY, NOSE LANDING GEAR DOOR FWD, RH	1	
- 4	4M34P8-55	. . BUSHING (MDA)	2	
	MS15001-1	. . FITTING, LUB	1	
	25-46103- 1	. FITTING ASSEMBLY, NOSE LANDING GEAR DOOR PUSH-PULL POINT	2	
- 5	12B098	. . NUT (EN)	1	
- 6	25-46103- 7	. . WASHER	1	
- 7	25-46103- 13	. . BOLT	1	
- 8	25-46103- 9	. . BUSHING	1	
- 9	NAS497	. . FITTING, LUB	1	
- 10	4M34P9-100	. . BUSHING (MDA)	1	
- 11	25-46103- 11	. . FITTING	1	
- 12	25-46100- 49	. SEAL, LEFT SIDE, SELECTED FROM 9M55A (MDA)	1	
- 13	25-46100- 53	. SEAL, LEFT SIDE, SELECTED FROM 9M55A (MDA)	1	
- 14	25-72054- 3	. BRACKET, GUN BAY VENT VALVE MOUNTING	1	25-46100-2
- 15	25-46100- 9	. CAP LH	1	25-46100-1
- 16	25-46100- 71	. CAP LH	1	25-46100-301
	25-46100- 10	. CAP RH	1	25-46100-2
- 17	25-46107- 3	. RIB, NOSE LANDING GEAR DOOR FORWARD RH, USED ON LEFT SIDE.	1	
	25-46107- 4	. RIB, NOSE LANDING GEAR DOOR FORWARD LH, USED ON RIGHT SIDE	1	

Alighting Gear

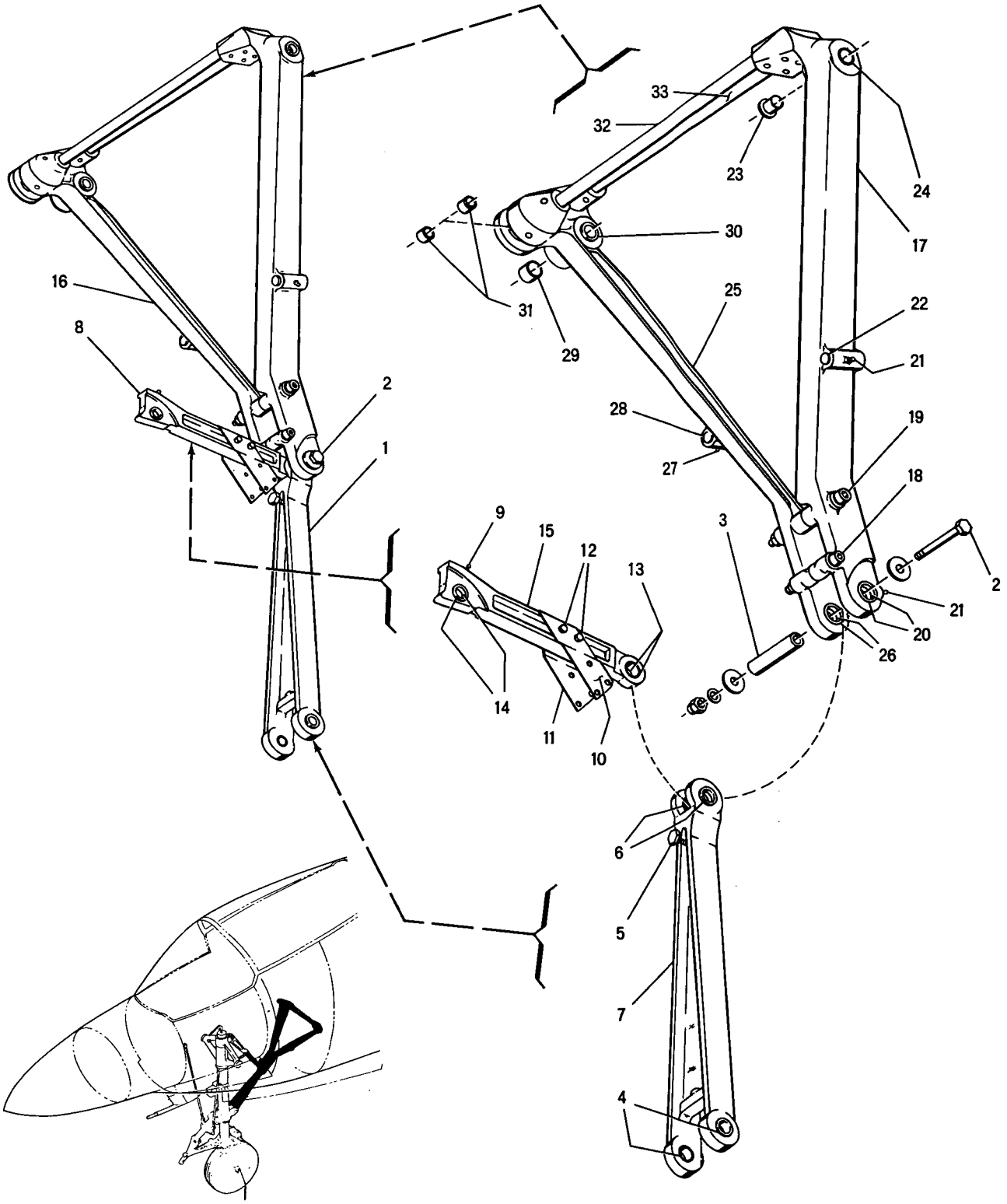

Figure 189 - Nose Landing Gear Drag Brace Link Assembly

FIGURE & INDEX NUMBER	PART NUMBER	1 2 3 4 5 6 7 DESCRIPTION	UNITS PER ASS'Y	USABLE ON CODE
189 -	25-45020- 1	LINK ASSY, NOSE LANDING GEAR DRAG BRACE, SEE FIG. 184-28 FOR NEXT HIGHER ASSEMBLY	REF	
- 1	25-45001- 1	. BRACE ASSY, NOSE LANDING GEAR LOWER DRAG	1	
		ATTACHING PARTS		
- 2	AN6-44A	. BOLT	1	
	4M36-03015	. WASHER (MDA)	2	
	AN960-616	. WASHER	1	
	AN365-624	. NUT	1	
- 3	25-45036- 3	. PIN, NOSE LANDING GEAR DRAG BRACE	1	
		¤----¤-¤-¤---¤		
- 4	4M34-14-65	. . BUSHING (MDA)	2	
- 5	3M6-3-20	. . BOLT (MDA)	1	
	AN315-3R	. . NUT	1	
	AN960D10	. . WASHER	2	
	AN364-1032	. . NUT	1	
	AN944-101	. . FITTING, LUB	2	
- 6	4M34P16-30	. . BUSHING (MDA)	4	
- 7	25-45001- 3	. . BRACE	1	
- 8	25-45010- 1	. LINK ASSY, NOSE LANDING GEAR LOWER LOCK	1	
- 9	AN944-101	. . FITTING, LUB	1	
- 10	25-45041- 3	. . BRACKET, NOSE LG LOCK INDICATOR SWITCH LH	1	
- 11	25-45041- 4	. . BRACKET, NOSE LG LOCK INDICATOR SWITCH RH	1	
		ATTACHING PARTS		
- 12	AN3-14A	. . BOLT	2	
	AN960D10L	. . WASHER	2	
	NAS42-6-26	. . SPACER	4	
	AN960D10	. . WASHER	2	
	AN364-1032	. . NUT	2	
		¤----¤-¤-¤----¤		
	NAS497	. . FITTING, LUB	1	
- 13	4M33P16-009	. . BUSHING (MDA)	2	
- 14	25-45010- 5	. . BUSHING, NOSE LG LOWER LOCK LINK, ALTERED FROM 4M34P11-27 (MDA)	2	
- 15	25-45010- 7	. . LINK	1	
- 16	25-45014- 1	. BRACE ASSY, NOSE LANDING GEAR UPPER DRAG	1	
- 17	25-45008- 1	. . BRACE ASSY, NOSE LG UPPER DRAG, LEFT SIDE	1	
		ATTACHING PARTS		
- 18	NAS146-74	. . BOLT	1	
	NAS143-6C	. . WASHER	1	
	NAS143-6	. . WASHER	1	
	EB064	. . NUT (EN)	1	
- 19	NAS148-92	. . BOLT	1	
	NAS143-8C	. . WASHER	1	
	NAS143-8	. . WASHER	1	
	EB080	. . NUT (EN)	1	
		¤----¤-¤-¤----¤		
- 20	4M33P16-010	. . . BUSHING (MDA)	2	
- 21	AN944-101	. . . FITTING, LUB	2	
- 22	4M34P7-88	. . . BUSHING (MDA)	2	
- 23	4M34-14-95	. . . BUSHING (MDA)	1	
- 24	4M33-14-105	. . . BUSHING (MDA)	1	
- 25	25-45009- 1	. . BRACE ASSY, NOSE LG UPPER DRAG, RIGHT SIDE	1	
- 26	4M33P16-010	. . . BUSHING (MDA)	2	
- 27	AN944-101	. . . FITTING, LUB	2	
- 28	4M34P7-88	. . . BUSHING (MDA)	2	
- 29	4M33-14-105	. . . BUSHING (MDA)	1	
- 30	4M34-14-95	. . . BUSHING (MDA)	1	
- 31	4M33-10-012	. . . BUSHING (MDA)	2	
- 32	25-45014- 5	. . TUBE, NOSE LG UPPER DRAG BRACE	1	
- 33	25-45014- 7	. . TUBE, NOSE LG UPPER DRAG BRACE	1	

Power Plant

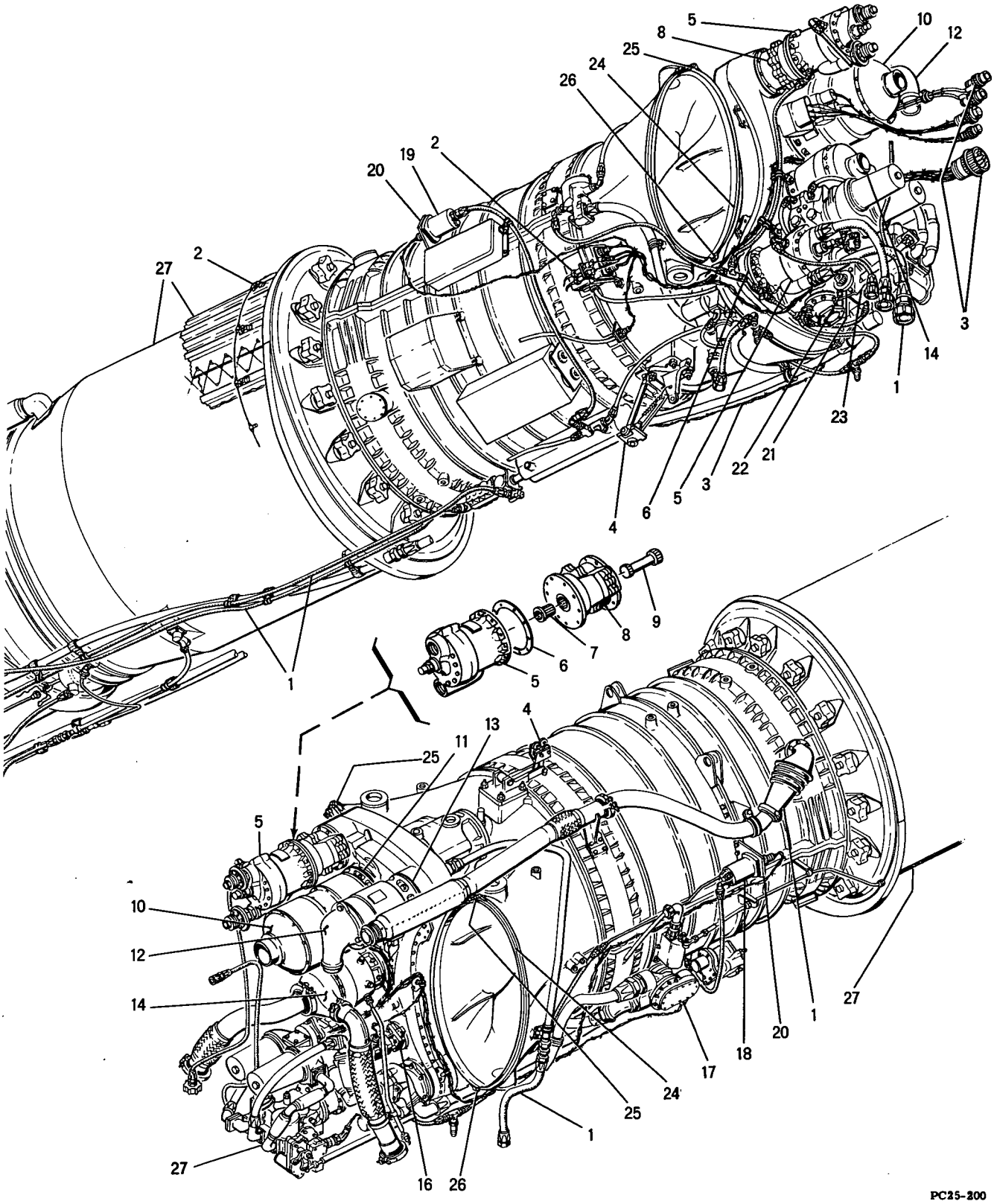

Figure 190 -- Power Plant Installation (Equipment) and Quick Engine Change Assembly

FIGURE & INDEX NUMBER	PART NUMBER	1 2 3 4 5 6 7 DESCRIPTION	UNITS PER ASS'Y	USABLE ON CODE
190 -	25-50006- 1	POWER PLANT INSTL & QUICK ENGINE CHANGE ASSY, SEE FIG. 1-14 FOR NEXT HIGHER ASSEMBLY	1	
- 1	NO NUMBER	• PIPING INSTALLATION, ENGINE, SEE FIG. 191 FOR NEXT HIGHER ASSEMBLY	REF	
- 2	NO NUMBER	• FIRE DETECTION SYSTEM, ENGINE, SEE FIG. 192 FOR NEXT HIGHER ASSEMBLY	REF	
- 3	NO NUMBER	• ELECTRICAL INSTL, ENGINE, SEE FIG. 193 FOR NEXT HIGHER ASSEMBLY	REF	
- 4	NO NUMBER	• MOUNTS INSTALLATION, ENGINE, SEE FIG. 194 FOR NEXT HIGHER ASSEMBLY	REF	
- 5	66WA600-2 Q	• PUMP, ENGINE DRIVEN VARIABLE DELIVERY HYD (NYB) MCDONNELL SPEC 25-69002-1	2	
- 6	AN4047-1 Q	• GASKET	2	
- 7	AN4052-1 Q	• ADAPTER, FURNISHED WITH ENGINE	REF	
- 8	61E480-3 †Q	• ADAPTER, GEARBOX GFP	1	
- 9	63F567-1 †Q	• SHAFT, SPLINE GFP	1	
- 10	E1821-1 †Q	• GENERATOR, A-C, GFP	1	
- 11	AN4144-1 Q	• GASKET	1	
- 12	E1603-1 Q	• GENERATOR, D-C (NAVY) G35-2 (JH) AN 03-5AG-16	1	
	AN4052-1 Q	• ADAPTER, FURN WITH ENGINE, USE WITH INDEX 12	REF	
- 13	AN4047-1 Q	• GASKET	1	
- 14	ATS40-1 †Q	• STARTER, GFP	1	
- 15	AN4047-1 Q	• GASKET	1	
- 16	R88G1320-050 †Q	• TACHOMETER, GEN, AN5544-3, AFTO 05-5-6, GFP	1	
- 17	R88T1985-000 †Q	• TRANSMITTER, FUEL FLOWMETER, 50A56C1 (BUA) GFP	1	
- 18	R88T2070-000 †Q	• TRANSMITTER, AFTERBURNER FUEL PRESSURE, AN 05-55B-63, GFP	1	
		ATTACHING PARTS		
	AN515-6R12 Q	• SCREW	4	
	AN960D6 Q	• WASHER	4	
		¤----¤-¤-¤----¤		
- 19	R88T2574-000 †Q	• TRANSMITTER, OIL PRESSURE, GFP	1	
		ATTACHING PARTS		
	AN515-6R12 Q	• SCREW	4	
	AN960D6 Q	• WASHER	4	
		¤----¤-¤-¤----¤		
- 20	25-50093- 5 Q	• SUPPORT, OIL & AFTERBURNER FUEL PRESSURE TRANSMITTERS	2	
		ATTACHING PARTS		
	AN4CH16A Q	• BOLT	6	
	AN960-416 Q	• WASHER	6	
		¤----¤-¤-¤----¤		
- 21	R88T2651-240 †Q	• TRANSMITTER, FUEL PRESSURE, AN 05-55B-81, GFP	1	
		ATTACHING PARTS		
- 22	AN515-6R12 Q	• SCREW	4	
	AN960D6 Q	• WASHER	4	
		¤----¤-¤-¤----¤		
- 23	25-50094- 3 Q	• SUPPORT, ENGINE INLET FUEL PRESS. TRANSMITTER	1	
- 24	25-59001- 1 Q	• RING ASSEMBLY, AIR DUCT SUPPORT	2	
- 25	15343-1	• • STRAP ASSY (MAR)	1	
- 26	15343	• • STRAP ASSY (MAR)	1	
- 27	J40WE22A †Q	• ENGINE ASSY, GFP, FOR FUTURE PROCUREMENT USE J40WE22	1	
	J40WE22 †Q	• ENGINE ASSEMBLY, GFP, USE FOR FUTURE PROCUREMENT TO REPLACE J40WE22A	1	

Q INDICATES COMPONENTS OF QUICK ENGINE CHANGE ASSEMBLY. SEE FIGURES 191, 192, 193 & 194 FOR OTHER COMPONENTS OF THE QUICK ENGINE CHANGE ASSEMBLY.
† INDICATES ITEM IS NOT FURNISHED BY CONTRACTOR AS A COMPONENT OF 25-50006-3 QUICK ENGINE CHANGE KIT.

Power Plant

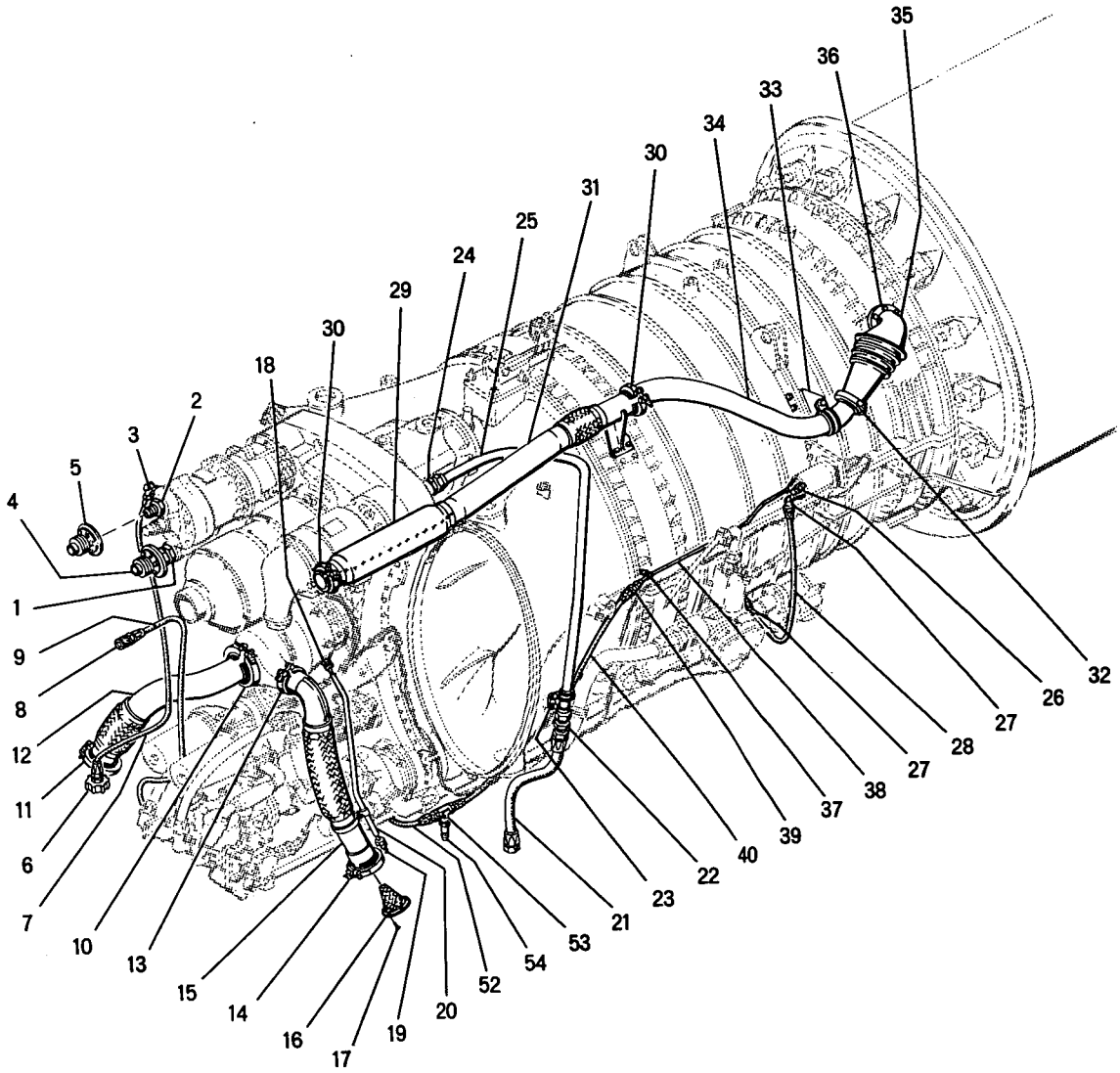

PC25-201

Figure 191 -- Engine Piping Installation (Sheet 1 of 2)

FIGURE & INDEX NUMBER	PART NUMBER		1 2 3 4 5 6 7 DESCRIPTION	UNITS PER ASS'Y	USABLE ON CODE
191 -	NO NUMBER		PIPING INSTALLATION, ENGINE, SEE FIG. 190-1 FOR NEXT HIGHER ASSEMBLY	REF	
- 1	AN6289D16	Q	• NUT	1	
	AN6291-16	Q	• RING, BACK UP, USE WITH INDEX 1	1	
	AN6290-16	Q	• GASKET, USE WITH INDEX 1	1	
- 2	AN6289D12	Q	• NUT	1	
	AN6291-12	Q	• RING, BACK UP, USE WITH INDEX 2	1	
	AN6290-12	Q	• GASKET, USE WITH INDEX 2	1	
- 3	AN833-6D	Q	• ELBOW	2	
	AN6289D6	Q	• NUT, USE WITH INDEX 3	2	
	AN6291-6	Q	• RING, BACK UP, USE WITH INDEX 3	2	
	AN6290-6	Q	• GASKET, USE WITH INDEX 3	2	
- 4	145S4-16D	Q	• COUPLING, HALF (AQ)	1	
- 5	155S4-12D	Q	• COUPLING, HALF (AQ)	1	
- 6	150S1-6D	Q	• NUT, COUPLING (AQ)	2	
	155-25-8	Q	• NUT, COUPLING (AQ) USE WITH INDEX 6	2	
- 7	MS28741-6-0380	Q	• HOSE ASSEMBLY, HYDRAULIC PUMP SCAVENGE	1	
- 8	1001-4	Q	• COUPLING (RYY)	1	
- 9	MS28741-4-0352	Q	• HOSE ASSEMBLY, FUEL REGULATOR BLEED	1	
- 10	42990-3.535M4	Q	• COUPLING (MAR)	1	
	920AL900-46	Q	• GASKET (JM) USE WITH INDEX 10	1	
- 11	42990-3.697M4	Q	• COUPLING (MAR)	1	
	920AL900-50	Q	• GASKET (JM) USE WITH INDEX 11	1	
- 12	101027	Q	• TUBE (FAKB)	1	
- 13	42990-2.945M4	Q	• COUPLING (MAR)	1	
	920AL900-37	Q	• GASKET (JM) USE WITH INDEX 13	1	
- 14	42990-4.151M4	Q	• COUPLING (MAR)	1	
	920AL900-55	Q	• GASKET (JM) USE WITH INDEX 14	1	
- 15	101024	Q	• TUBE ASSEMBLY (FAKB)	1	
- 16	25-52060- 1	Q	• FILTER ASSEMBLY, STARTER AIR	1	
			ATTACHING PARTS		
- 17	AN507C632-4	Q	• SCREW	4	
			¤----¤-¤-¤----¤		
- 18	AN815-4D	Q	• UNION	1	
	AN901-4A	Q	• GASKET, USE WITH INDEX 18	1	
- 19	AN815-4D	Q	• UNION	2	
- 20	203-1600-3	Q	• TUBE ASSEMBLY (DNKA)	1	
- 21	MS28741-16-0120	Q	• HOSE ASSEMBLY, GEARBOX VENT	1	
- 22	AN815-16D	Q	• UNION	1	
- 23	25-50098- 3	Q	• BRACKET, SEAL DRAIN LINE SUPPORT	1	
			ATTACHING PARTS		
	AN3-4A	Q	• BOLT	1	
	AN960D10	Q	• WASHER	2	
	AN74A4	Q	• BOLT	1	
	AN960D416	Q	• WASHER	1	
			¤----¤-¤-¤----¤		
- 24	AN815-16D	Q	• UNION	1	
	AN6290-16	Q	• GASKET, USE WITH INDEX 24	1	
- 25	25-58211- 27	Q	• TUBE ASSEMBLY, GEARBOX VENT	1	
- 26	15-50106- 1	Q	• VENT ASSY, FUEL PRESSURE TRANSMITTER	2	
	AN818-4D		• • NUT	1	
	15-50106- 3		• • SCREEN	1	
	15-50107- 3		• • WASHER, FUEL PRESSURE TRANSMITTER	1	
	AN815-4D		• • UNION	1	
	MS29512-4	Q	• GASKET, USE WITH INDEX 26	2	
- 27	AN833-4D	Q	• ELBOW	5	
	AN924-4D	Q	• NUT, USE WITH INDEX 27	5	
	MS29512-4	Q	• GASKET, USE WITH INDEX 27	5	
- 28	MS28741-4-0240	Q	• HOSE ASSEMBLY, FUEL	1	
- 29	25-50006- 5	Q	• BLANKET, ENGINE DUCT, MAKE FROM B506, SEAMAN PRODUCTS, BURBANK CALIFORNIA	1	
- 30	42990-3.187M4	Q	• CLAMP (MAR)	2	
	920AL900-40	Q	• GASKET (JM) USE WITH INDEX 30	2	
- 31	101030	Q	• DUCT ASSEMBLY (FAKB)	1	
- 32	42990-3.427M4	Q	• COUPLING (MAR)	1	
	920AL900-44	Q	• GASKET (JM) USE WITH INDEX 32	1	
- 33	25-56071- 3	Q	• BRACKET, AIR BLEED LINE CLAMP	1	
			ATTACHING PARTS		
	AN4CH16A	Q	• BOLT	2	
	AN960-416	Q	• WASHER	4	
			¤----¤-¤-¤----¤		
- 34	101031	Q	• DUCT ASSEMBLY (FAKB)	1	
- 35	25-56051- 3	Q	• ELBOW, ENG AIR BLEED	1	
			ATTACHING PARTS		
	AN4H5A	Q	• BOLT	8	
	AN960D416	Q	• WASHER	8	
			¤----¤-¤-¤----¤		

Q INDICATES COMPONENTS OF QUICK ENGINE CHANGE ASSEMBLY. SEE FIGURES 190, 192, 193 & 194 FOR OTHER COMPONENTS OF THE QUICK ENGINE CHANGE ASSEMBLY.

Power Plant

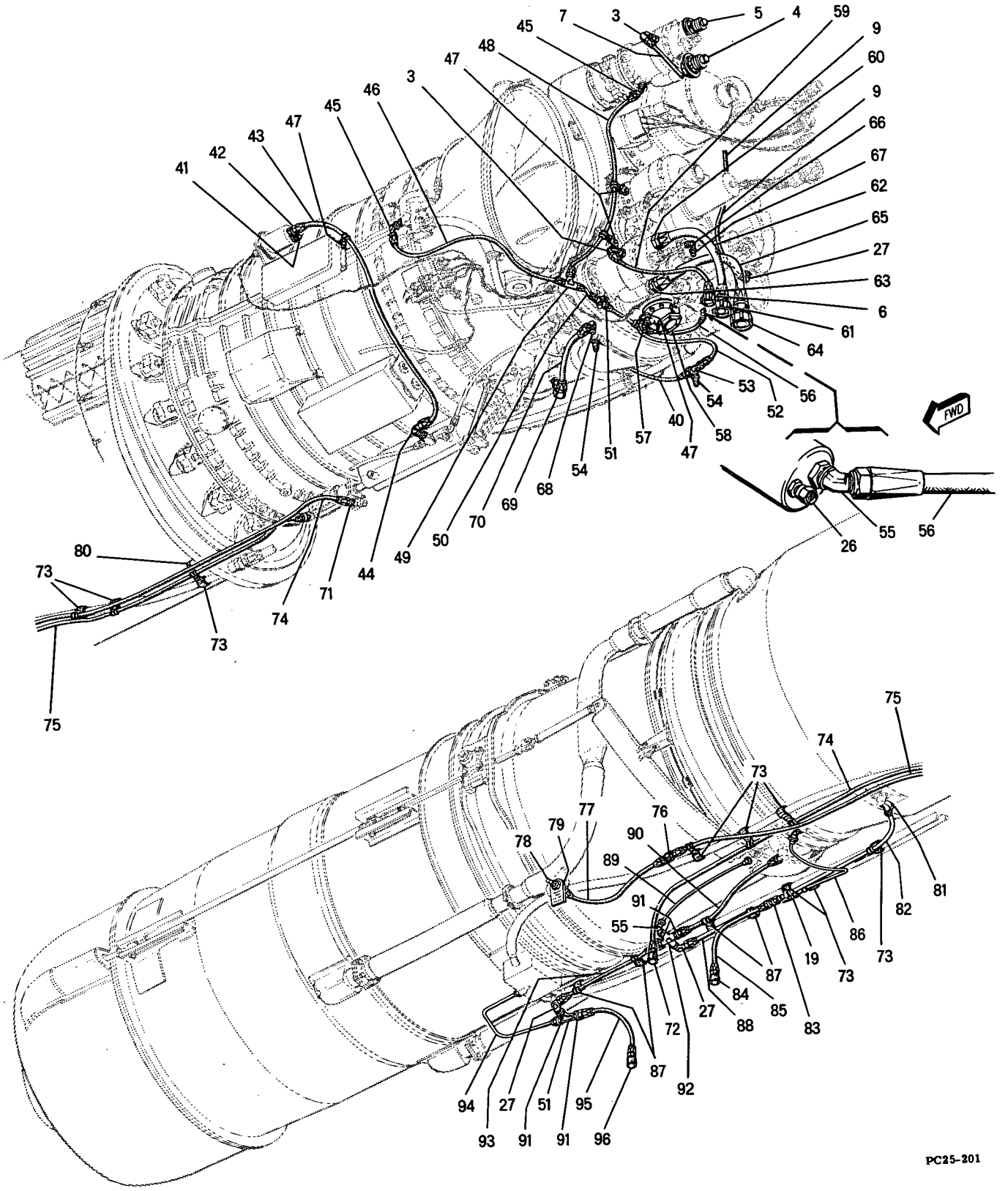

Figure 191 -- Engine Piping Installation (Sheet 2 of 2)

FIGURE & INDEX NUMBER	PART NUMBER		DESCRIPTION (1 2 3 4 5 6 7)	UNITS PER ASS'Y	USABLE ON CODE
191 - 36	25-56073- 3	Q	• GASKET, ENGINE AIR BLEED ELBOW	1	
- 37	25-50098- 3	Q	• BRACKET, SEAL DRAIN LINE SUPPORT	1	
			ATTACHING PARTS		
	AN4-4A	Q	• BOLT	1	
	AN960D416	Q	• WASHER	1	
	AN960-416	Q	• WASHER	3	
	AN3-4A	Q	• BOLT	1	
	AN960D10	Q	• WASHER	1	
	AN364-1032	Q	• NUT	1	
			¤----¤-¤-¤----¤		
- 38	25-58211- 35	Q	• TUBE ASSEMBLY, AFTERBURNER FUEL PRESSURE TRANSMITTER DRAIN	1	
- 39	AN919-1D	Q	• REDUCER	1	
- 40	MS28741-4-0360	Q	• HOSE ASSEMBLY, AFTERBURNER FUEL PRESSURE TRANSMITTER DRAIN	1	
- 41	15-50106- 1	Q	• VENT ASSEMBLY, TRANSMITTER OIL PRESSURE	1	
	AN818-4D		• • NUT	1	
	15-50106- 3		• • SCREEN	1	
	15-50107- 3		• • WASHER, TRANSMITTER OIL PRESSURE	1	
	AN815-4D		• • UNION	1	
- 42	AN815-4D	Q	• UNION	1	
	AN6290-4	Q	• GASKET, USE WITH INDEX 42	1	
- 43	MS28741-4-0484	Q	• HOSE ASSEMBLY, OIL	1	
- 44	15-58359	Q	• FITTING ASSEMBLY, OIL PRESSURE TRANSMITTER	1	
	15-58034- 3		• • RESTRICTOR, OIL PRESSURE TRANSMITTER	1	
	AN924-4D	Q	• NUT, USE WITH INDEX 44	1	
	AN6290-4	Q	• GASKET, USE WITH INDEX 44	1	
- 45	AN833-4D	Q	• ELBOW	2	
	AN924-4D	Q	• NUT, USE WITH INDEX 45	2	
	AN6290-4	Q	• GASKET, USE WITH INDEX 45	2	
- 46	MS28741-4-0360	Q	• HOSE ASSEMBLY, OIL	1	
- 47	25-50098- 3	Q	• BRACKET, SEAL DRAIN LINE SUPPORT	4	
			ATTACHING PARTS		
	AN3-4A	Q	• BOLT	4	
	AN960D10	Q	• WASHER	4	
	AN364-1032	Q	• NUT	4	
			¤----¤-¤-¤----¤		
- 48	MS28741-4-0356	Q	• HOSE ASSEMBLY, HYD	1	
- 49	AN824-4D	Q	• TEE	1	
- 50	MS28741-4-0050	Q	• HOSE ASSY, HYD PUMP SEAL & OIL SCUPPER DRAIN	1	
- 51	AN779D4	Q	• TEE	1	
	AN775-4	Q	• BOLT, USE WITH INDEX INDEX 51	1	
	AN901-4A	Q	• GASKET, USE WITH INDEX 51	2	
- 52	MS28741-4-0230	Q	• HOSE ASSY, HYD PUMP SEAL & OIL SCUPPER DRAIN	1	
- 53	AN938-4D	Q	• TEE	2	
- 54	1012-4	Q	• NIPPLE (RYY)	2	
	AN6290-4	Q	• GASKET, USE WITH INDEX 54	2	
- 55	AN837-4D	Q	• ELBOW	2	
	AN924-4D	Q	• NUT, USE WITH INDEX 55	2	
	MS29512-4	Q	• GASKET, USE WITH INDEX 55	2	
- 56	MS28741-4-0170	Q	• HOSE ASSEMBLY, FUEL PRESSURE	1	
- 57	15-58359	Q	• FITTING ASSEMBLY, FUEL PRESSURE TRANSMITTER	1	
	15-58034- 3		• • RESTRICTOR, FUEL PRESSURE TRANSMITTER	1	
	AN924-4D	Q	• NUT, USE WITH INDEX 57	1	
	MS29512-4	Q	• GASKET, USE WITH INDEX 57	1	
- 58	25-58064- 3	Q	• INLET, ENGINE FUEL	1	
	25-50099- 3	Q	• GASKET, FUEL INLET, USE WITH INDEX 58	1	
- 59	MS28741-6-0256	Q	• HOSE ASSEMBLY, HYDRAULIC PUMP SCAVENGE	1	
- 60	AN815-12D	Q	• UNION	1	
	AN6290-12	Q	• GASKET, USE WITH INDEX 60	1	
- 61	150S1-12D	Q	• COUPLING, HALF (AQ)	1	
	155-25-12	Q	• NUT (AQ) USE WITH INDEX 61	1	
- 62	25-69363- 3	Q	• HOSE ASSEMBLY, POWER CONTROL PRESSURE	1	
	881-12S		• • FITTING, HOSE (AQ)	2	
- 63	AN815-16D	Q	• UNION	1	
	AN6290-16	Q	• GASKET, USE WITH INDEX 63	1	
- 64	140S1-16D	Q	• COUPLING, HALF (AQ)	1	
	145-25-16	Q	• NUT (AQ) USE WITH INDEX 64	1	
- 65	MS28741-16-0194	Q	• HOSE ASSEMBLY, HYDRAULIC PUMP SUCTION	1	
- 66	AN927-4D	Q	• ELBOW	1	
	AN832-4D	Q	• UNION, USE WITH INDEX 66	1	
	AN924-4D	Q	• NUT, USE WITH INDEX 66	1	
	MS29512-4	Q	• GASKET, USE WITH INDEX 66	1	
- 67	1012-4	Q	• NIPPLE (RYY)	1	
	MS29512-4	Q	• GASKET, USE WITH INDEX 67	1	
- 68	AN821-10D	Q	• ELBOW	1	
- 69	AN833-10D	Q	• ELBOW	1	

Q INDICATES COMPONENTS OF QUICK ENGINE CHANGE ASSEMBLY. SEE FIGURES 190, 192, 193 & 194 FOR OTHER COMPONENTS OF THE QUICK ENGINE CHANGE ASSEMBLY.

FIGURE & INDEX NUMBER	PART NUMBER	1 2 3 4 5 6 7 DESCRIPTION	UNITS PER ASS'Y	USABLE ON CODE
191 -	AN924-10D Q	NUT, USE WITH INDEX 69	1	
	AN6290-10 Q	GASKET, USE WITH INDEX 69	1	
- 70	MS28741-10-0160Q	HOSE ASSEMBLY, OIL RESERVOIR DRAIN	1	
- 71	AN815-5D Q	UNION	1	
	MS29512-5 Q	GASKET, USE WITH INDEX 71	1	
- 72	1001-5 Q	COUPLING (RYY)	1	A-B
	1001-8 Q	COUPLING (RYY)	1	C-F
	AN941D8 Q	ELBOW	1	C-F
	AN919-11D Q	REDUCER	1	C-F
	MS29512-8 Q	GASKET	2	C-F
- 73	4521-16 Q	CLAMP (AVIC)	9	
- 74	MS28741-5-1060 Q	HOSE ASSEMBLY, DUMP VALVE DRAIN	1	
- 75	MS28741-4-0900 Q	HOSE ASSEMBLY, FUEL DISTRIBUTOR PRESSURE GAGE	1	
- 76	1001-4 Q	COUPLING (RYY)	1	
	1012-4 Q	NIPPLE (RYY) USE WITH INDEX 76	1	
- 77	MS28741-4-0160†Q	HOSE ASSEMBLY, FUEL	1	
- 78	AN929-4 †Q	CAP	1	
	AN924-4D †Q	NUT, USE WITH INDEX 78	1	
	AN960D716 †Q	WASHER, USE WITH INDEX 78	1	
	AN832-4D †Q	UNION, USE WITH INDEX 78	1	
- 79	25-50122- 1 Q	NAMEPLATE ASSEMBLY, FUEL DISTRIBUTOR PRESSURE CONNECTION	1	
- 80	AN814-8D Q	PLUG	1	
	AN901-8A Q	GASKET, USE WITH INDEX 80	1	
- 81	AN778-8D Q	ELBOW	1	
	AN775-8D Q	BOLT, USE WITH INDEX 81	1	
	AN901-8A Q	GASKET, USE WITH INDEX 81	2	
- 82	25-58211- 21 Q	TUBE ASSEMBLY, AFT COMBUSTION CHAMBER DRAIN	1	
- 83	AN815-8D Q	UNION	1	
- 84	1001-8 Q	COUPLING (RYY)	1	
- 85	MS28741-8-0126 Q	HOSE ASSEMBLY, COMBUSTION CHAMBER DRAIN	1	
- 86	25-58211- 33 Q	TUBE ASSEMBLY, ENGINE SCUPPER DRAIN	1	
- 87	4521-22 Q	CLAMP (AVIC)	4	
- 88	MS28741-4-0180 Q	HOSE ASSEMBLY, ENGINE SCUPPER DRAIN	1	
- 89	25-58211- 31 Q	TUBE ASSEMBLY, ENGINE SCUPPER DRAIN	1	
- 90	MS28741-4-0240 Q	HOSE ASSEMBLY, ENGINE SCUPPER DRAIN	1	
- 91	AN815-4D Q	UNION	4	
	MS29512-4 Q	GASKET, USE WITH INDEX 91	4	
- 92	AN937D4 Q	CROSS	1	
- 93	MS28741-4-0175 Q	HOSE ASSEMBLY, ENGINE SCUPPER DRAIN	1	
- 94	25-58211- 37 Q	TUBE ASSEMBLY, ENGINE SCUPPER DRAIN	1	
- 95	MS28741-4-0202 Q	HOSE ASSEMBLY, ENGINE SCUPPER DRAIN	1	
- 96	1001-4 Q	COUPLING (RYY)	1	
	1002-4 Q	NIPPLE (RYY) USE WITH INDEX 96	1	
	AN924-4D Q	NUT, USE WITH INDEX 96	1	

Q INDICATES COMPONENTS OF QUICK ENGINE CHANGE ASSEMBLY. SEE FIGURES 190, 192, 193 & 194 FOR OTHER COMPONENTS OF THE QUICK ENGINE CHANGE ASSEMBLY.
† INDICATES ITEM IS NOT FURNISHED BY CONTRACTOR AS A COMPONENT OF 25-50006-3 QUICK ENGINE CHANGE KIT.

FIGURE & INDEX NUMBER	PART NUMBER		1 2 3 4 5 6 7 DESCRIPTION	UNITS PER ASS'Y	USABLE ON CODE
192 -	NO NUMBER		FIRE DETECTION SYSTEM, ENGINE, SEE FIG. 190-2 FOR NEXT HIGHER ASSEMBLY	REF	
- 1	801616	Q	• CONNECTOR, SENSING ELEMENT (WK)	1	
			ATTACHING PARTS		
	NAS229-7	Q	• SCREW	1	
	AN960D10L	Q	• WASHER	1	
	AN364-1032	Q	• NUT	1	
			¤----¤-¤-¤----¤		
	4521-22	Q	• CLAMP (AVIC) USE WITH INDEX 1	1	
- 2	801616	Q	• CONNECTOR, SENSING ELEMENT (WK)	1	
			ATTACHING PARTS		
	NAS229-7	Q	• SCREW	1	
	AN960D10L	Q	• WASHER	1	
	AN364-1032	Q	• NUT	1	
			¤----¤-¤-¤----¤		
	4521-16	Q	• CLAMP (AVIC) USE WITH INDEX 2	1	
- 3	801616	Q	• CONNECTOR, SENSING ELEMENT (WK)	3	
			ATTACHING PARTS		
	NAS229-7	Q	• SCREW	3	
	AN960D10L	Q	• WASHER	3	
	AN364-1032	Q	• NUT	3	
			¤----¤-¤-¤----¤		
- 4	801616	Q	• CONNECTOR, SENSING ELEMENT (WK)	6	
			ATTACHING PARTS		
	NAS229-7	Q	• SCREW	6	
	AN960-10	Q	• WASHER	6	
	AN363-1032	Q	• NUT	6	
			¤----¤-¤-¤----¤		
- 5	25-50095- 1	Q	• BRACKET ASSEMBLY, FIRE DETECTION SYSTEM	10	
			ATTACHING PARTS		
	AN227-10-10	Q	• STUD	10	
	AN960D10	Q	• WASHER	10	
	AN364-1032	Q	• NUT	10	
	NAS229-6	Q	• SCREW	10	
	AN960D10L	Q	• WASHER	10	
	AN364-1032	Q	• NUT	10	
			¤----¤-¤-¤----¤		
	4521-22	Q	• CLAMP (AVIC) USE WITH INDEX 5	10	
- 6	25-50095- 1	Q	• BRACKET ASSEMBLY, FIRE DETECTION SYSTEM	11	
			ATTACHING PARTS		
	AN227-10-10	Q	• STUD	11	
	AN960D10	Q	• WASHER	11	
	AN364-1032	Q	• NUT	11	
	NAS229-6	Q	• SCREW	11	
	AN960D10L	Q	• WASHER	11	
	AN364-1032	Q	• NUT	11	
			¤----¤-¤-¤----¤		
	4521-16	Q	• CLAMP (AVIC) USE WITH INDEX 6	11	
- 7	25-50095- 1	Q	• BRACKET ASSEMBLY, FIRE DETECTION SYSTEM	19	
			ATTACHING PARTS		
	AN227-10-10	Q	• STUD	19	
	AN960D10	Q	• WASHER	19	
	AN364-1032	Q	• NUT	19	
	NAS229-6	Q	• SCREW	19	
	AN960D10L	Q	• WASHER	19	
	AN364-1032	Q	• NUT	19	
			¤----¤-¤-¤----¤		
- 8	25-50096- 1	Q	• SUPPORT ASSEMBLY, FIRE DETECTION SYSTEM	12	
			ATTACHING PARTS		
	AN227-10-10	Q	• STUD	12	
	AN960-10	Q	• WASHER	12	
	AN363-1032	Q	• NUT	12	
	AN4CH14A	Q	• BOLT	12	
	AN960-416	Q	• WASHER	24	
	AN363-1032	Q	• NUT	12	
			¤----¤-¤-¤----¤		
- 9	801120	Q	• ELEMENT, SENSING (WK)	5	
- 10	NAF1332-5	Q	• ELEMENT, SENSING	7	
- 11	NAF1336-1	Q	• CONNECTOR, SENSING ELEMENT	2	

Q INDICATES COMPONENTS OF QUICK ENGINE CHANGE ASSEMBLY. SEE FIGURES 190, 191, 193 & 194 FOR OTHER COMPONENTS OF THE QUICK ENGINE CHANGE ASSEMBLY.

Power Plant

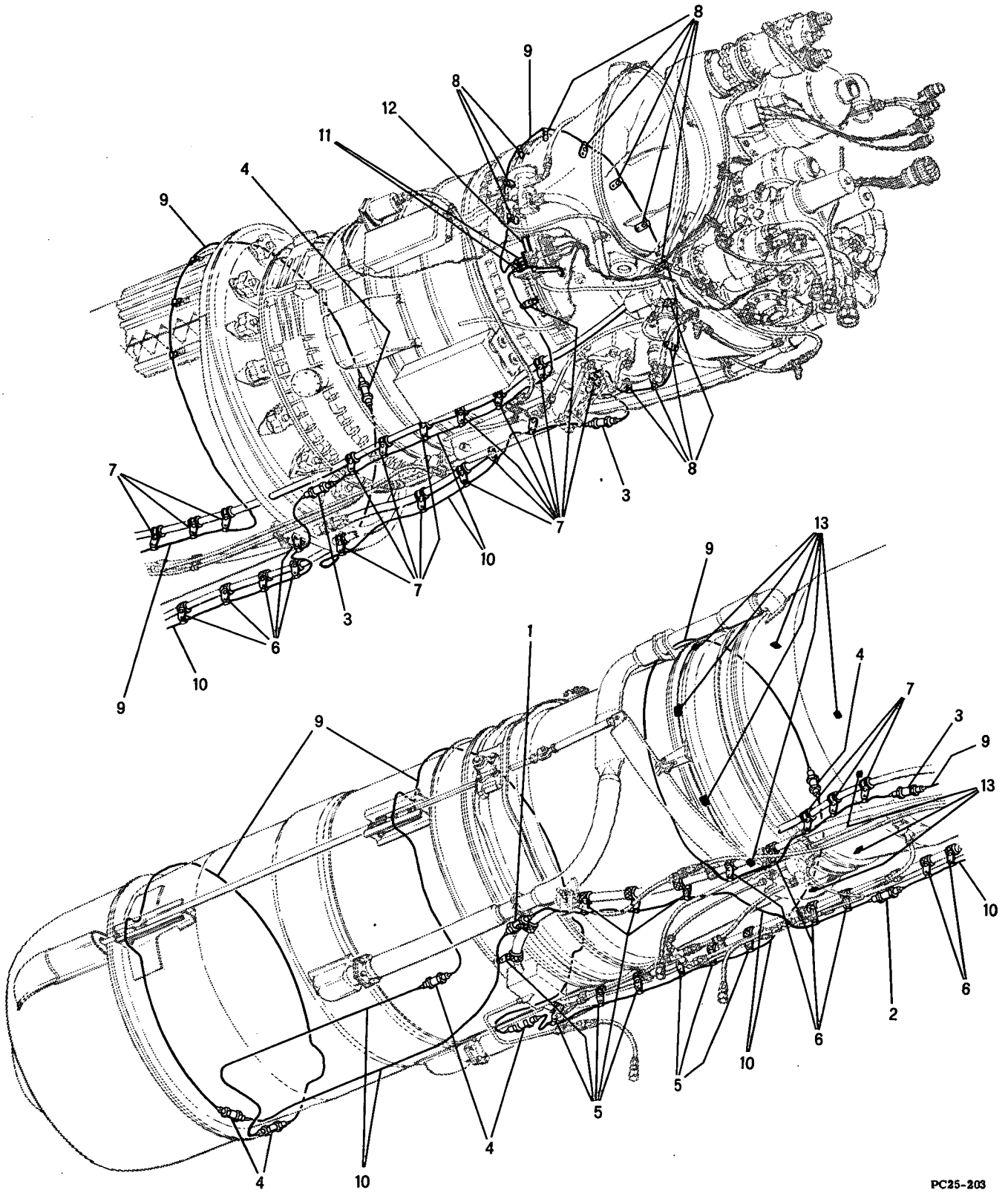

Figure 192 -- Engine Fire Detection System

FIGURE & INDEX NUMBER	PART NUMBER	1 2 3 4 5 6 7 DESCRIPTION	UNITS PER ASS'Y	USABLE ON CODE
192 -		ATTACHING PARTS		
	AN500A4-6 Q	• SCREW	8	
	AN365-440 Q	• NUT	8	
		¤----¤-¤-¤----¤		
- 12	25-50097- 3 Q	• BRACKET, FIRE DETECTION SYSTEM	1	
		ATTACHING PARTS		
	AN74A6 Q	• BOLT	2	
	AN960D416 Q	• WASHER	4	
		¤----¤-¤-¤----¤		
- 13	25-50120- 3 Q	• SHIELD, TURBINE OUTLET TEMPERATURE BOSS	9	
	25-50121- 3 Q	• GASKET, TURBINE OUTLET TEMPERATURE BOSS, USE WITH INDEX 13	9	

Q INDICATES COMPONENTS OF QUICK ENGINE CHANGE ASSEMBLY. SEE FIGURES 190, 191, 193 & 194 FOR OTHER COMPONENTS OF THE QUICK ENGINE CHANGE ASSEMBLY.

Power Plant

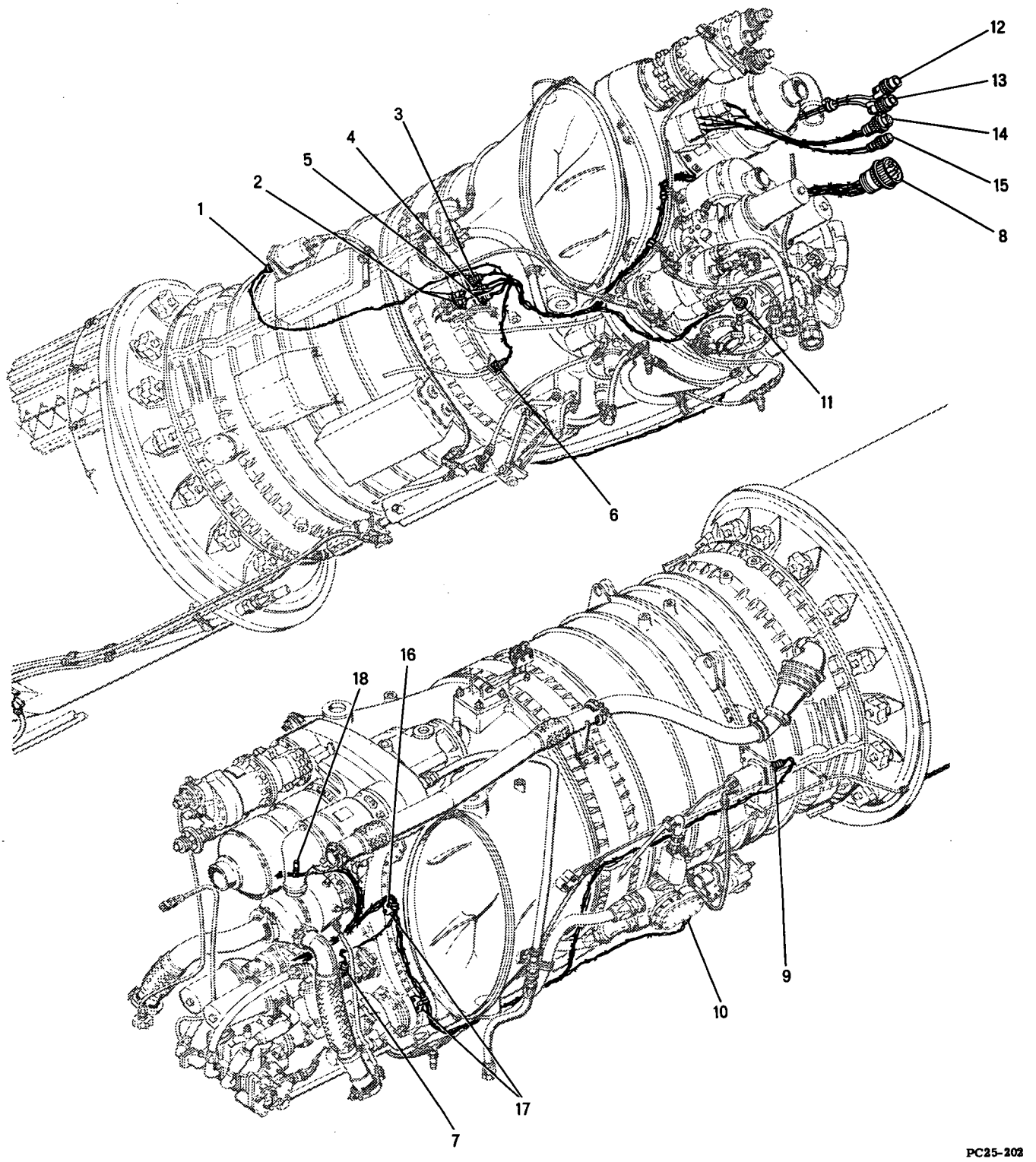

Figure 193 -- Engine Electrical Installation

FIGURE & INDEX NUMBER	PART NUMBER		1 2 3 4 5 6 7 DESCRIPTION	UNITS PER ASS'Y	USABLE ON CODE
193 -	NO NUMBER		ELECTRICAL INSTALLATION, ENGINE, SEE FIG. 190-3 FOR NEXT HIGHER ASSEMBLY	REF	
	25-79000-A38	Q	• BUNDLE ASSEMBLY, WIRE	1	
- 1	3106BS14S2S		• • PLUG (CED) OIL PRESSURE TRANSMITTER, USE WITH MS29513-14 O RING	1	
- 2	3106BS12S3P		• • PLUG (CED) FIRE DETECTION DISCONNECT, USE WITH MS29513-14 O RING	2	
- 3	10-42617-52P		• • PLUG (BPD) ENGINE JUNCTION BOX	1	
	10-40908-171		• • SHELL (BPD) PLUG BACK, USE WITH INDEX 3	1	
- 4	3106BS16S9S		• • PLUG (CED) ENGINE JUNCTION BOX, USE WITH MS29513-16 O RING	1	
- 5	3106BS16S1P		• • PLUG (CED) ENGINE JUNCTION BOX, USE WITH MS29513-16 O RING	1	
- 6	3106BS14S5P		• • PLUG (CED) INTERIM CONTROL JUNCTION BOX, USE WITH MS29513-14 O RING	1	
- 7	3106BS12S3S		• • PLUG (CED) TACHOMETER GENERATOR, USE WITH MS29513-14 O RING	1	
- 8	AN3106M36-7P		• • PLUG, USE WITH MS29513-132 O RING	1	
- 9	3106BS14S2S		• • PLUG (CED) AFTERBURNER FUEL PRESSURE TRANSMITTER, USE WITH MS29513-14 O RING	1	
- 10	3106BS16S1S		• • PLUG (CED) FUEL FLOWMETER TRANSMITTER, USE WITH MS29513-16 O RING	1	
- 11	3106BS14S2S		• • PLUG (CED) FUEL PRESSURE TRANSMITTER, USE WITH MS29513-14 O RING	1	
	25-79000-155	Q	• BUNDLE ASSEMBLY, WIRE	1	
- 12	83020		• • PLUG (AITR) ENGINE DISCONNECT	1	
- 13	83021		• • PLUG (AITR) ENGINE DISCONNECT	1	
	25-79000-153	Q	• BUNDLE ASSEMBLY, WIRE	1	
- 14	AN3106M28-22S		• • PLUG, USE WITH MS29513-28 O RING	1	
- 15	AN3106M18-13S		• • PLUG, USE WITH MS29513-18 O RING	1	
- 16	25-50103- 1	Q	• CLIP ASSEMBLY, WIRE BUNDLE CLAMP SUPPORT	1	
			ATTACHING PARTS		
	NAS229-20	Q	• SCREW	1	
	NAS43-3-48	Q	• SPACER	1	
			¤----¤-¤-¤----¤		
- 17	25-50103- 1	Q	• CLIP ASSEMBLY, WIRE BUNDLE CLAMP SUPPORT	1	
			ATTACHING PARTS		
	NAS229-9	Q	• SCREW	1	
			¤----¤-¤-¤----¤		
- 18	25-50098- 3	Q	• BRACKET, ELECTRICAL BUNDLE SUPPORT	1	
			ATTACHING PARTS		
	NAS229-8	Q	• SCREW	1	
	AN960D10	Q	• WASHER	1	
	AN364-1032	Q	• NUT	1	
			¤----¤-¤-¤----¤		

Q INDICATES COMPONENTS OF QUICK ENGINE CHANGE ASSEMBLY. SEE FIGURES 190, 191, 192 & 194 FOR OTHER COMPONENTS OF THE QUICK ENGINE CHANGE ASSEMBLY.

Power Plant

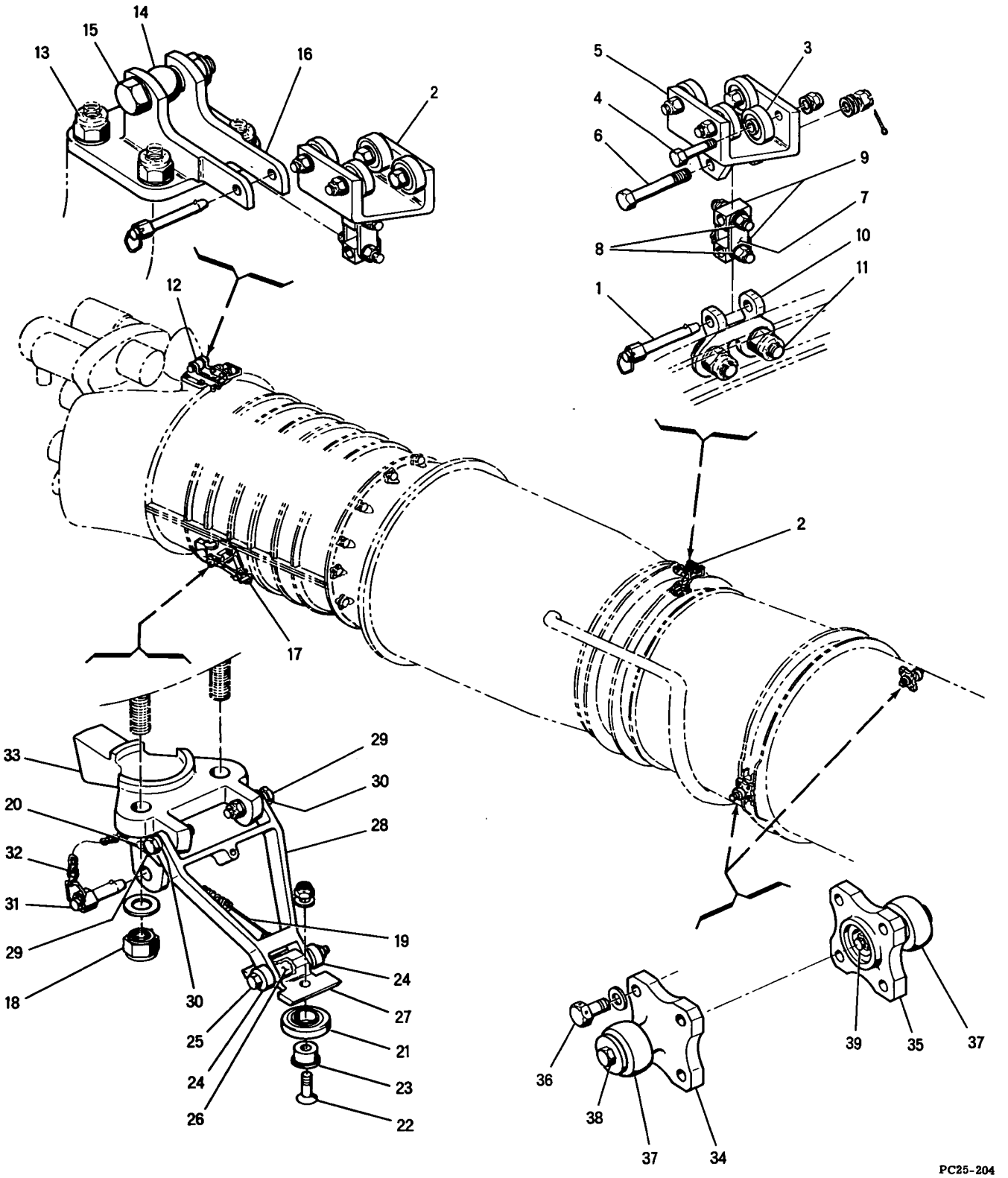

Figure 194 -- Engine Mounts Installation

FIGURE & INDEX NUMBER	PART NUMBER	1 2 3 4 5 6 7 DESCRIPTION	UNITS PER ASS'Y	USABLE ON CODE
190-4	NO NUMBER	MOUNTS INSTALLATION, ENGINE, SEE FIG. 190-4 FOR NEXT HIGHER ASSY	REF	
- 1	A621 Q	• PIN, QUICK RELEASE (AVDE)	2	
- 2	25-50005- 1 †Q	• SKATE ASSEMBLY, ENGINE REMOVAL, FOR FUTURE PROCUREMENT USE 25-50005-301	2	A-B
	25-50005-301 †Q	• SKATE ASSEMBLY, ENGINE REMOVAL, USE FOR FUTURE PROCUREMENT TO REPLACE 25-50005-1	2	
- 3	AN200KP5	• • BEARING	4	
		ATTACHING PARTS		
- 4	AN5-13A	• • BOLT	4	
	AN960-516	• • WASHER	4	
	AN365-524	• • NUT	4	
		¤----¤-¤-¤----¤		
- 5	25-50051- 3	• • SKATE, ENGINE REMOVAL	1	
		ATTACHING PARTS		
- 6	AN6-24	• • BOLT	1	25-50005-1
	NAS146A42	• • BOLT	1	25-50005-301
	AN960-616	• • WASHER	2	25-50005-1
	NAS143-6C	• • WASHER	1	25-50005-301
	AN960-616	• • WASHER	1	25-50005-301
	AN310-6	• • NUT	1	
	AN380-3-3	• • PIN, COTTER	1	
		¤----¤-¤-¤----¤		
- 7	25-50067- 3	• • LINK, ENGINE REMOVAL UNIVERSAL	2	25-50005-1
	25-50119- 3	• • LINK, ENGINE REMOVAL UNIVERSAL	2	25-50005-301
		ATTACHING PARTS		
- 8	AN363-428	• • NUT	4	
	AN960-416	• • WASHER	4	
		¤----¤-¤-¤----¤		
- 9	25-50066- 3	• • TRUNNION, ENGINE REMOVAL UNIVERSAL	2	25-50005- 1
	25-50118- 3	• • TRUNNION, ENGINE REMOVAL UNIVERSAL	2	25-50005-301
- 10	25-50090- 3 Q	• FITTING, ENGINE AFT SKATE	1	
		ATTACHING PARTS		
- 11	AN9-11 Q	• BOLT	2	
	AN960-916 Q	• WASHER	4	
	AN363C918 Q	• NUT	2	
		¤----¤-¤-¤----¤		
- 12	25-50004- 3 Q	• YOKE ASSEMBLY, ENGINE FORWARD MOUNT	1	A-B
	25-50004-301 Q	• YOKE ASSEMBLY, ENGINE FORWARD MOUNT	1	C-F
		ATTACHING PARTS		
- 13	AN363C1018	• NUT	4	
	AN960-1016	• WASHER	4	
		¤----¤-¤-¤----¤		
- 14	25-50071- 3	• • BALL, ENGINE FORWARD MOUNT	1	
		ATTACHING PARTS		
- 15	NAS464-12A32	• • BOLT	1	
	AN960-1216	• • WASHER	2	
	25-50072- 3	• • RING, ENGINE FORWARD MOUNT	2	
	AN364-1216	• • NUT	1	
		¤----¤-¤-¤----¤		
- 16	25-50088- 3	• • YOKE, ENGINE FORWARD MOUNT	1	A-B
	25-50106- 3	• • YOKE, ENGINE FORWARD MOUNT	1	C-F
- 17	25-50007- 1 Q	• ROLLER ASSEMBLY, ENGINE LOWER	1	A-B
	25-50007-301 Q	• ROLLER ASSEMBLY, ENGINE LOWER	1	C-F
		ATTACHING PARTS		
- 18	AN363C1018	• NUT	2	
	AN960D1016	• WASHER	2	
		¤----¤-¤-¤----¤		
- 19	25-50079- 5	• • SPRING, ENGINE LOWER TROLLEY EXTENSION	1	
		ATTACHING PARTS		
- 20	AN392-23	• • PIN, FLAT HEAD	1	
	AN960D4	• • WASHER	2	
	AN380-2-1	• • PIN, COTTER	1	
		¤----¤-¤-¤----¤		
- 21	AN201KP12A	• • BEARING	1	
		ATTACHING PARTS		
- 22	AN509-516R20	• • SCREW	1	
	AN960D516	• • WASHER	1	
	AN365-524	• • NUT	1	
		¤----¤-¤-¤----¤		

Q INDICATES COMPONENTS OF QUICK ENGINE CHANGE ASSEMBLY. SEE FIGURES 190, 191, 192 & 193 FOR OTHER COMPONENTS OF THE QUICK ENGINE CHANGE ASSEMBLY.
† INDICATES ITEM IS NOT FURNISHED BY CONTRACTOR AS A COMPONENT OF 25-50006-3 QUICK ENGINE CHANGE KIT.

FIGURE & INDEX NUMBER	PART NUMBER	1 2 3 4 5 6 7 DESCRIPTION	UNITS PER ASS'Y	USABLE ON CODE
194 - 23	25-50101- 3	• • BUSHING, ENGINE LOWER ROLLER	1	
- 24	AN200KP4	• • BEARING	2	
		ATTACHING PARTS		
- 25	AN4-27A	• • BOLT	1	
	AN960-416	• • WASHER	1	
	AN364-428	• • NUT	1	
		¤----¤-¤-¤----¤		
- 26	NAS72-4-103	• • BUSHING	1	
- 27	25-50102- 3	• • PLATE, ENGINE LOWER ROLLER BEARING	1	
- 28	25-50052- 3	• • ARM, ENGINE LOWER ROLLER TROLLEY	1	
		ATTACHING PARTS		
- 29	AN5-13A	• • BOLT	2	
	AN960D516	• • WASHER	2	
	AN365-524	• • NUT	2	
		¤----¤-¤-¤----¤		
- 30	NAS75-5-016	• • BUSHING	2	
- 31	A708	• • PIN (AVDE)	1	
- 32	NAF1088-1A3	• • CHAIN	1	
- 33	25-50092- 3	• • BRACKET, ENGINE LOWER ROLLER	1	A-B
	25-50108- 3	• • BRACKET, ENGINE LOWER ROLLER	1	C-F
- 34	25-50055- 3 Q	• STUD, ENGINE REAR MOUNT, LEFT SIDE	1	
- 35	25-50056- 3 Q	• STUD, ENGINE REAR MOUNT, RIGHT SIDE	1	
		ATTACHING PARTS		
- 36	AN8H10A Q	• BOLT	8	
	AN960-816 Q	• WASHER	8	
		¤----¤-¤-¤----¤		
- 37	25-50081- 3 Q	• BALL, ENGINE AFT MOUNT	2	
		ATTACHING PARTS		
- 38	AN6-30A	• BOLT	1	
	AN960-616L	• WASHER	2	
	25-50086- 3	• WASHER, ENGINE MOUNT BALL RETAINING	1	
	AN363C624	• NUT	1	
- 39	AN6-25A	• BOLT	1	
	AN960-616L	• WASHER	1	
	25-50086- 3	• WASHER, ENGINE MOUNT BALL RETAINING	1	
	AN363C624	• NUT	1	
		¤----¤-¤-¤----¤		

Q INDICATES COMPONENTS OF QUICK ENGINE CHANGE ASSEMBLY. SEE FIGURES 190, 191, 192 & 193 FOR OTHER COMPONENTS OF THE QUICK ENGINE CHANGE ASSEMBLY.

FIGURE & INDEX NUMBER	PART NUMBER		1 2 3 4 5 6 7 DESCRIPTION	UNITS PER ASS'Y	USABLE ON CODE
-	25-50006- 1		QUICK ENGINE CHANGE ASSEMBLY, THE ITEMS AND QUANTITES LISTED BELOW ARE FOR COMPONENTS OF THE QUICK ENGINE CHANGE ASSEMBLY NOT LISTED ELSEWHERE IN THE GROUP ASSEMBLY PARTS LIST.	REF	
	AN6-10A	Q	. BOLT	2	
	AN74A4	Q	. BOLT	1	
	AN3-5A	Q	. BOLT	5	
	AN3-12A	Q	. BOLT	1	
	AN3-4A	Q	. BOLT	23	
	AN4-16A	Q	. BOLT	3	
	AN6H5A	Q	. BOLT	4	
	AN743-12	Q	. BRACKET	1	
	AN742D8C	Q	. CLAMP	3	
	AN742D14C	Q	. CLAMP	15	
	AN742D30C	Q	. CLAMP	6	
	AN742-48	Q	. CLAMP	1	
	AN742D26C	Q	. CLAMP	3	
	AN742D24C	Q	. CLAMP	26	
	AN742D22C	Q	. CLAMP	8	
	AN742D20C	Q	. CLAMP	1	
	AN742D18C	Q	. CLAMP	1	
	AN742D12C	Q	. CLAMP	12	
	AN742D11C	Q	. CLAMP	3	
	AN742D10C	Q	. CLAMP	28	
	AN742D9C	Q	. CLAMP	3	
	AN742D7C	Q	. CLAMP	4	
	AN742D5C	Q	. CLAMP	11	
	AN742D4C	Q	. CLAMP	1	
	AN742-35	Q	. CLAMP	1	
	AN742D6C	Q	. CLAMP	2	
	AN742D10CB	Q	. CLAMP	2	
	AN742-12	Q	. CLAMP	11	
	AN742-4	Q	. CLAMP	124	
	AN742D18CB	Q	. CLAMP	2	
	AN742-40	Q	. CLAMP	2	
	AN742-9	Q	. CLAMP	1	
	AN742D23C	Q	. CLAMP	6	
	AN995NC32	Q	. LOCKWIRE	AR	
	AN995NC51	Q	. LOCKWIRE	AR	
	AN363C1032	Q	. NUT	1	
	AN365-428	Q	. NUT	3	
	AN363-1032	Q	. NUT	68	
	AN364-1032	Q	. NUT	40	
	NAS229-6	Q	. SCREW	7	
	NAS229-8	Q	. SCREW	12	
	NAS229-20	Q	. SCREW	2	
	NAS43-3-24	Q	. SPACER	1	
	AN227-10-10	Q	. STUD	65	
	9M58COA	Q	. TAPE (MDA)	AR	
	9M58F39	Q	. TAPE (MDA)	AR	
	9M58F29	Q	. TAPE (MDA)	AR	
	9M58F28	Q	. TAPE (MDA)	AR	
	9M58F12	Q	. TAPE (MDA)	AR	
	9M58EOA	Q	. TAPE (MDA)	AR	
	AN960-10	Q	. WASHER	69	
	AN960D10	Q	. WASHER	25	
	AN960-616	Q	. WASHER	4	
	AN960D6	Q	. WASHER	1	
	AN960D416	Q	. WASHER	5	
	25-50006- 3	Q	KIT ASSEMBLY, QUICK ENGINE CHANGE	REF	

Q INDICATES COMPONENTS OF QUICK ENGINE CHANGE ASSEMBLY. SEE FIGURES 190, 191, 192, 193 & 194 FOR OTHER COMPONENTS OF THE QUICK ENGINE CHANGE ASSEMBLY.

Special Equipment

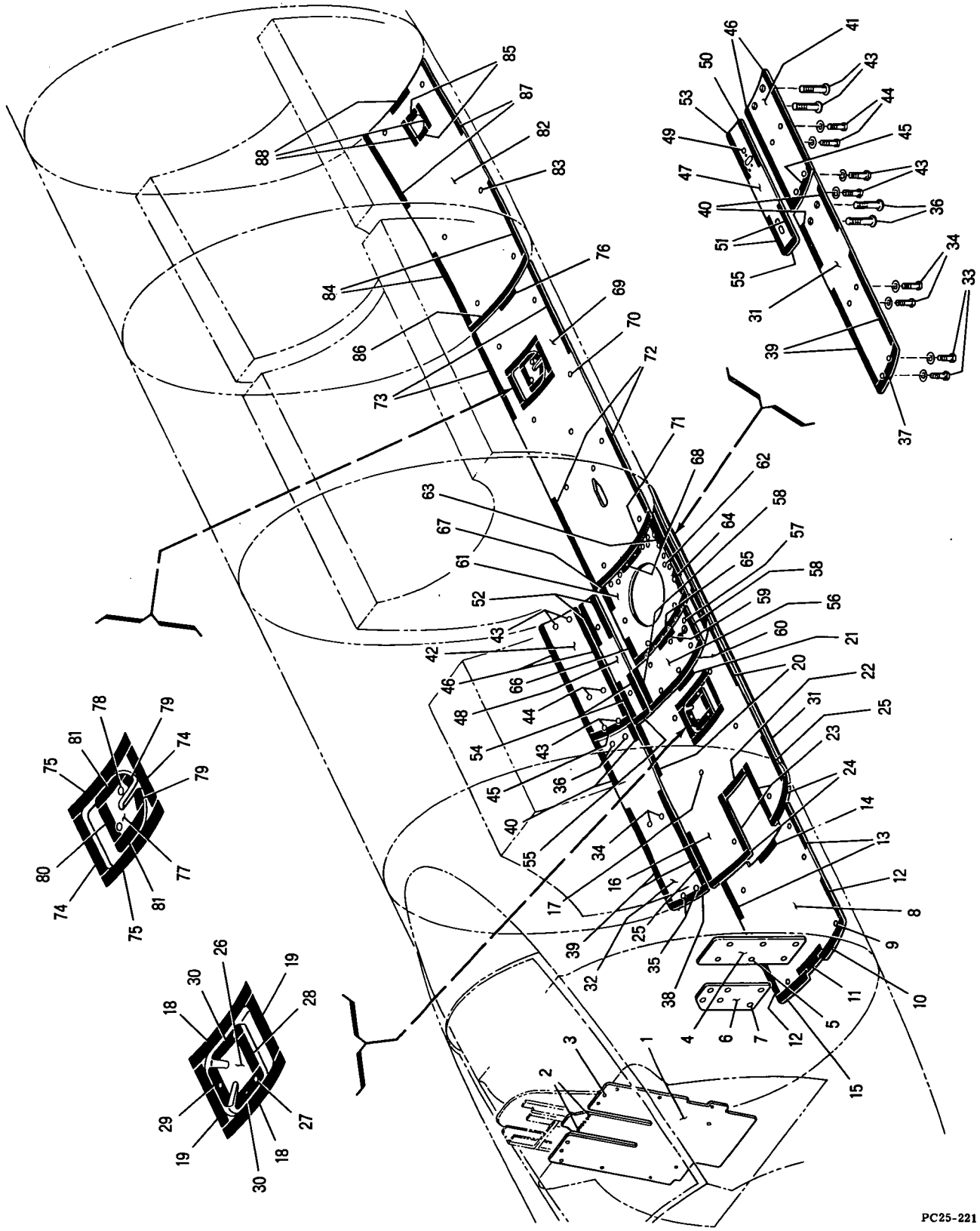

Figure 195 -- Pilot's and Ventral Armor Plate Kits

FIGURE & INDEX NUMBER	PART NUMBER	1 2 3 4 5 6 7 DESCRIPTION	UNITS PER ASS'Y	USABLE ON CODE
195 -	25-70003- 1	KIT, PILOTS BACK ARMOR PLATE	1	
- 1	25-70009- 5	• PLATE, PILOTS BACK ARMOR	1	
		ATTACHING PARTS		
- 2	AN3-10A	• BOLT	6	
	AN960D10L	• WASHER	6	
	AN960D10	• WASHER	6	
- 3	AN4-11A	• BOLT	12	
	AN960D416	• WASHER	12	
		¤----¤-¤-¤----¤		
	25-70002- 1	KIT, VENTRAL ARMOR PLATES	1	
- 4	25-70023- 3	• PLATE, AMMUNITION COMPT FWD ARMOR, LEFT SIDE	1	
		ATTACHING PARTS		
- 5	AN4-10A	• BOLT	6	
	AN960D416	• WASHER	6	
		¤----¤-¤-¤----¤		
- 6	25-70025- 3	• PLATE, AMMUNITION COMPT FWD ARMOR, RIGHT SIDE	1	
		ATTACHING PARTS		
- 7	AN4-10A	• BOLT	4	
	AN960D416	• WASHER	4	
		¤----¤-¤-¤----¤		
- 8	25-70011- 1	• PLATE ASSY, AMMUNITION ELEV DOOR VENTRAL ARMOR	1	
		ATTACHING PARTS		
- 9	AN4-10A	• BOLT	6	
	AN960-416L	• WASHER	6	
		¤----¤-¤-¤----¤		
- 10	25-70011- 15	• • SEAL	1	
- 11	25-70011- 13	• • SEAL	1	
- 12	25-70011- 11	• • SEAL	2	
- 13	25-70011- 9	• • SEAL	2	
- 14	25-70011- 7	• • SEAL	1	
- 15	25-70011- 5	• • SEAL	1	
	25-70011- 3	• • PLATE, AMMUNITION ELEV DOOR VENTRAL ARMOR	1	
- 16	25-70012- 1	• PLATE ASSY, FWD FUEL CELL CENTER VENTRAL ARMOR	1	
		ATTACHING PARTS		
- 17	AN4-10A	• BOLT	6	
	AN960-416L	• WASHER	6	
		¤----¤-¤-¤----¤		
- 18	25-70012- 19	• • SEAL	2	
- 19	25-70012- 17	• • SEAL	2	
- 20	25-70012- 15	• • SEAL	2	
- 21	25-70012- 13	• • SEAL	1	
- 22	25-70012- 11	• • SEAL	1	
- 23	25-70012- 9	• • SEAL	2	
- 24	25-70012- 7	• • SEAL	2	
- 25	25-70012- 5	• • SEAL	2	
	25-70012- 3	• • PLATE, FWD FUEL CELL CENTER VENTRAL ARMOR	1	
- 26	25-70014- 1	• PLATE ASSY, FORWARD FUEL CELL REFUELING DOOR VENTRAL ARMOR	1	
		ATTACHING PARTS		
- 27	AN4-10A	• BOLT	3	
	AN960-416L	• WASHER	3	
		¤----¤-¤-¤----¤		
- 28	25-70014- 9	• • SEAL	1	
- 29	25-70014- 7	• • SEAL	1	
- 30	25-70014- 5	• • SEAL	2	
	25-70014- 3	• • PLATE, FWD FUEL CELL REFUELING DOOR VENTRAL ARMOR	1	
- 31	25-70015- 1	• PLATE ASSY, PYLON AREA VENTRAL ARMOR LH	1	
- 32	25-70015- 2	• PLATE ASSY, PYLON AREA VENTRAL ARMOR RH	1	
		ATTACHING PARTS		
- 33	AN4-10A	• BOLT, LEFT SIDE	2	
	AN960-416L	• WASHER, LEFT SIDE	2	
- 34	AN4-10A	• BOLT	4	
	AN960-416L	• WASHER	4	
- 35	AN9-21A	• BOLT, RIGHT SIDE	2	
	AN960D916L	• WASHER RIGHT SIDE	2	
- 36	AN9-17A	• BOLT	4	
	AN960D916L	• WASHER	4	
		¤----¤-¤-¤----¤		
- 37	25-70015- 11	• • SEAL, LEFT SIDE	1	
- 38	25-70015- 13	• • SEAL, RIGHT SIDE	1	
- 39	25-70015- 9	• • SEAL	4	
- 40	25-70015- 23	• • SEAL	4	

FIGURE & INDEX NUMBER	PART NUMBER	1 2 3 4 5 6 7 DESCRIPTION	UNITS PER ASS'Y	USABLE ON CODE
195 -	25-70015- 19	• • PLATE, PYLON AREA VENTRAL ARMOR LH	1	
	25-70015- 20	• • PLATE, PYLON AREA VENTRAL ARMOR RH	1	
- 41	25-70015- 17	• PLATE ASSY, PYLON AREA VENTRAL ARMOR LH	1	
- 42	25-70015- 18	• PLATE ASSY, PYLON AREA VENTRAL ARMOR RH	1	
		ATTACHING PARTS		
- 43	AN9-17A	• BOLT	8	
	AN960D916L	• WASHER	8	
- 44	AN4-10A	• BOLT	4	
	AN960-416L	• WASHER	4	
		¤----¤-¤-¤----¤		
- 45	25-70015- 25	• • SEAL	2	
- 46	25-70015- 27	• • SEAL	4	
	25-70015- 21	• • PLATE, PYLON AREA VENTRAL ARMOR LH	1	
	25-70015- 22	• • PLATE, PYLON AREA VENTRAL ARMOR RH	1	
- 47	25-70018- 1	• PLATE ASSY, EQUIPMENT COMPT VENTRAL ARMOR, LEFT SIDE	1	
- 48	25-70018- 3	• PLATE ASSY, EQUIPMENT COMPT VENTRAL ARMOR, RIGHT SIDE	1	
		ATTACHING PARTS		
- 49	AN4-10A	• BOLT	4	
	AN960-416L	• WASHER	4	
		¤----¤-¤-¤----¤		
- 50	25-70018- 21	• • SEAL, LEFT SIDE	1	
- 51	25-70018- 19	• • SEAL, LEFT SIDE	2	
- 52	25-70018- 13	• • SEAL, RIGHT SIDE	2	
- 53	25-70018- 13	• • SEAL, LEFT SIDE	1	
- 54	25-70018- 11	• • SEAL, RIGHT SIDE	2	
- 55	25-70018- 9	• • SEAL	1	
	25-70018- 5	• • PLATE, EQUIPMENT COMPARTMENT VENTRAL ARMOR, LEFT SIDE	1	
	25-70018- 7	• • PLATE, EQUIPMENT COMPARTMENT VENTRAL ARMOR, RIGHT SIDE	1	
- 56	25-70016- 1	• PLATE ASSY, RAM AIR PUMP DOOR VENTRAL ARMOR	1	
		ATTACHING PARTS		
- 57	AN4-10A	• BOLT	6	
	AN960-416L	• WASHER	6	
		¤----¤-¤-¤----¤		
- 58	25-70016- 9	• • SEAL	2	
- 59	25-70016- 7	• • SEAL	1	
- 60	25-70016- 5	• • SEAL	1	
	25-70016- 3	• • PLATE, RAM AIR PUMP DOOR VENTRAL ARMOR	1	
- 61	25-70017- 1	• PLATE ASSY, ENGINE ACCESS DOOR VENTRAL ARMOR	1	
		ATTACHING PARTS		
- 62	AN4-10A	• BOLT	6	
	AN960-416L	• WASHER	6	
		¤----¤-¤-¤----¤		
- 63	25-70017- 15	• • SEAL	1	
- 64	25-70017- 13	• • SEAL	1	
- 65	25-70017- 11	• • SEAL	1	
- 66	25-70017- 9	• • SEAL	1	
- 67	25-70017- 7	• • SEAL	1	
- 68	25-70017- 5	• • SEAL	1	
	25-70017- 3	• • PLATE, ENGINE ACCESS DOOR VENTRAL ARMOR	1	
- 69	25-70019- 1	• PLATE ASSY, CENTER FUEL CELL VENTRAL ARMOR	1	
		ATTACHING PARTS		
- 70	AN4-10A	• BOLT	8	
	AN960-416L	• WASHER	8	
		¤----¤-¤-¤----¤		
- 71	25-70019- 7	• • SEAL	1	
- 72	25-70019- 17	• • SEAL	2	
- 73	25-70019- 5	• • SEAL	2	
- 74	25-70019- 9	• • SEAL	2	
- 75	25-70019- 11	• • SEAL	2	
- 76	25-70019- 15	• • SEAL	1	
	25-70019- 3	• • PLATE, CENTER FUEL CELL VENTRAL ARMOR	1	
- 77	25-70020- 1	• PLATE ASSY, CENTER FUEL CELL REFUELING DOOR VENTRAL ARMOR	1	
		ATTACHING PARTS		
- 78	AN4-10A	• BOLT	2	
	AN960-416L	• WASHER	2	
		¤----¤-¤-¤----¤		
- 79	25-70020- 9	• • SEAL	2	
- 80	25-70020- 7	• • SEAL	1	

FIGURE & INDEX NUMBER	PART NUMBER	1 2 3 4 5 6 7 DESCRIPTION	UNITS PER ASS'Y	USABLE ON CODE
195 - 81	25-70020- 5	• • SEAL	2	
	25-70020- 3	• • PLATE, CENTER FUEL CELL REFUELING DOOR VENTRAL ARMOR	1	
- 82	25-70021- 1	• PLATE ASSY, AFT FUEL CELL CENTER VENTRAL ARMOR	1	
		ATTACHING PARTS		
- 83	AN4-10A	• • BOLT	6	
	AN960-416L	• WASHER	6	
		¤----¤-¤-¤----¤		
- 84	25-70021- 13	• • SEAL	2	
- 85	25-70021- 11	• • SEAL	2	
- 86	25-70021- 9	• • SEAL	1	
- 87	25-70021- 7	• • SEAL	2	
- 88	25-70021- 5	• • SEAL	3	
	25-70021- 3	• • PLATE, AFT FUEL CELL CENTER VENTRAL ARMOR	1	

Systems Index

INDEX NO.	NOMENCLATURE	FIGURE NO.
1	Bell Crank - Rudder Control	55
2	Seal - Rudder Control	55
3	Cartridge - Aileron Feel System	55
4	Actuator - Aileron Artificial Feel Trim	55
5	Bell Crank - Stabilator Control	55
6	Seal - Aileron Control Fume	55
7	Cylinder - Master Brake	57
8	Box - Rudder Pedal Adjustment Gear	57
9	Pedal - Rudder	57
10	Stick - Control	56
11	Bell Crank - Aileron Control	56
12	Box - Slat Drive Gear	60
13	Motor - Slat Drive Hydraulic	60
14	Seal - Control Rod Fume	116
15	Bell Crank - Stabilator Control	116
16	Idler - Stabilator Control	116
17	Bell Crank - Stabilator Control	146
18	Servo - Stabilator Control	146
19	Damper - Stabilator Viscous	146
20	Actuator - Rudder	146
21	Bell Crank - Rudder Control	146
22	Damper - Rudder Feel System Viscous	146
23	Servo - Rudder Control	146
24	Bellows - Stabilator Feel System	147
25	Cylinder - Stabilator Feel System	150
26	Actuator - Stabilator Artificial Feel Trim	150
27	Damper - Stabilator Feel System Viscous	150
28	Actuator - Rudder Artificial Feel Trim	154
29	Actuator - Rudder Feel System	154
30	Cartridge - Rudder Feel Spring	154
31	Horn - Rudder	140
32	Cylinder - Stabilator Actuating	37
33	Cylinder - Speed Brake Actuating	145
34	Cylinder - Aileron Power Control	10
35	Bell Crank - Aileron Control	10
36	Screw Jack - Outer Wing Slat	8
37	Spline - Outer Wing Slat Torque Shaft	8
38	Carriage - Outer Wing Slat Track	5
39	Track - Outer Wing Slat	4
40	Spline - Inner Wing Slat Torque Shaft	25
41	Screw Jack - Inner Wing Slat	25
42	Cylinder - Wing Flap Actuating	28
43	Carriage - Inner Wing Slat Track	20
44	Track - Inner Wing Slat	17
45	Bell Crank - Aileron Control	26
46	Idler - Aileron Control	26
47	Cartridge - Aileron Control Spring	26

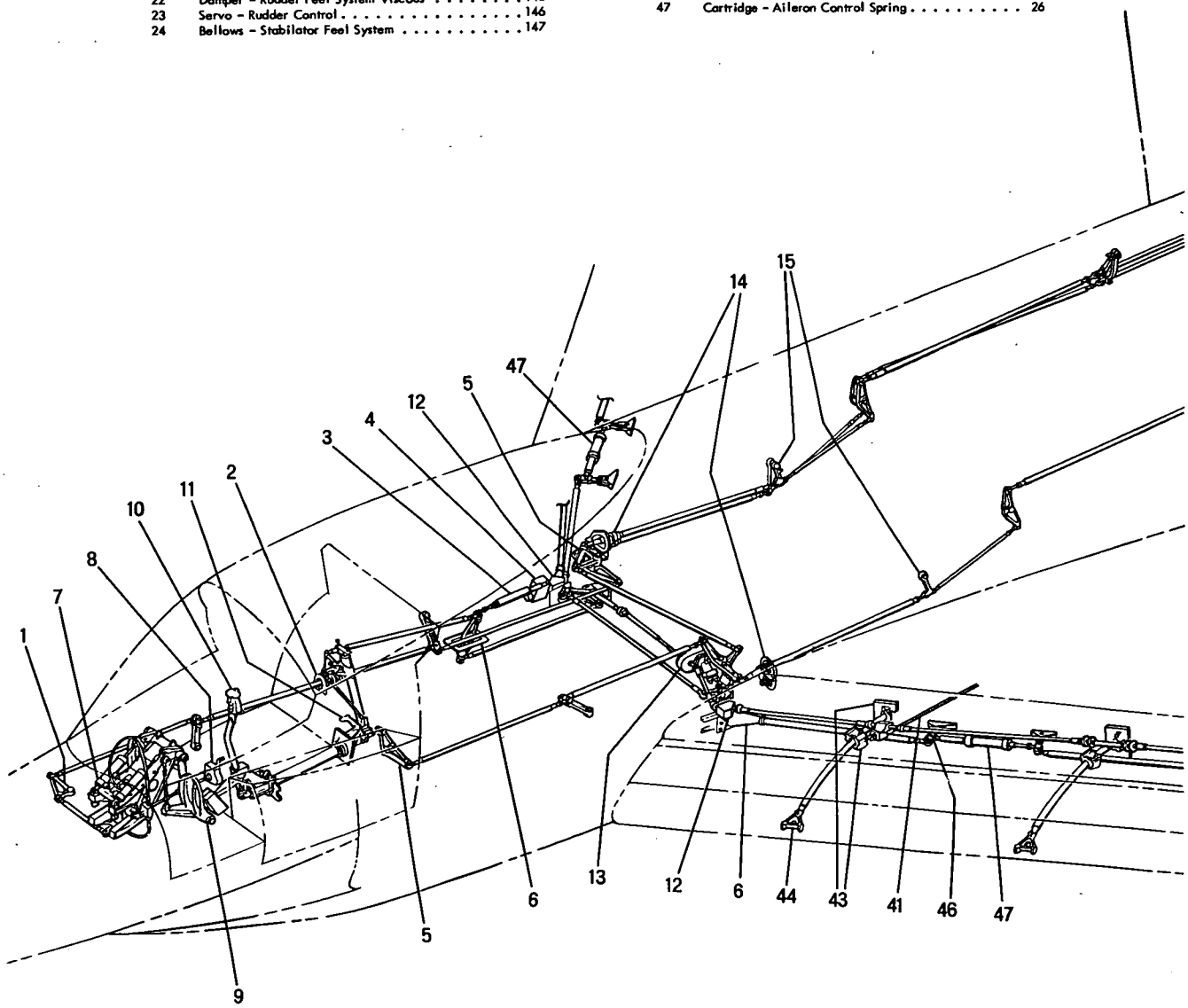

Figure 196 -- Surface Controls System Index (Sheet 1 of 2)

Systems Index

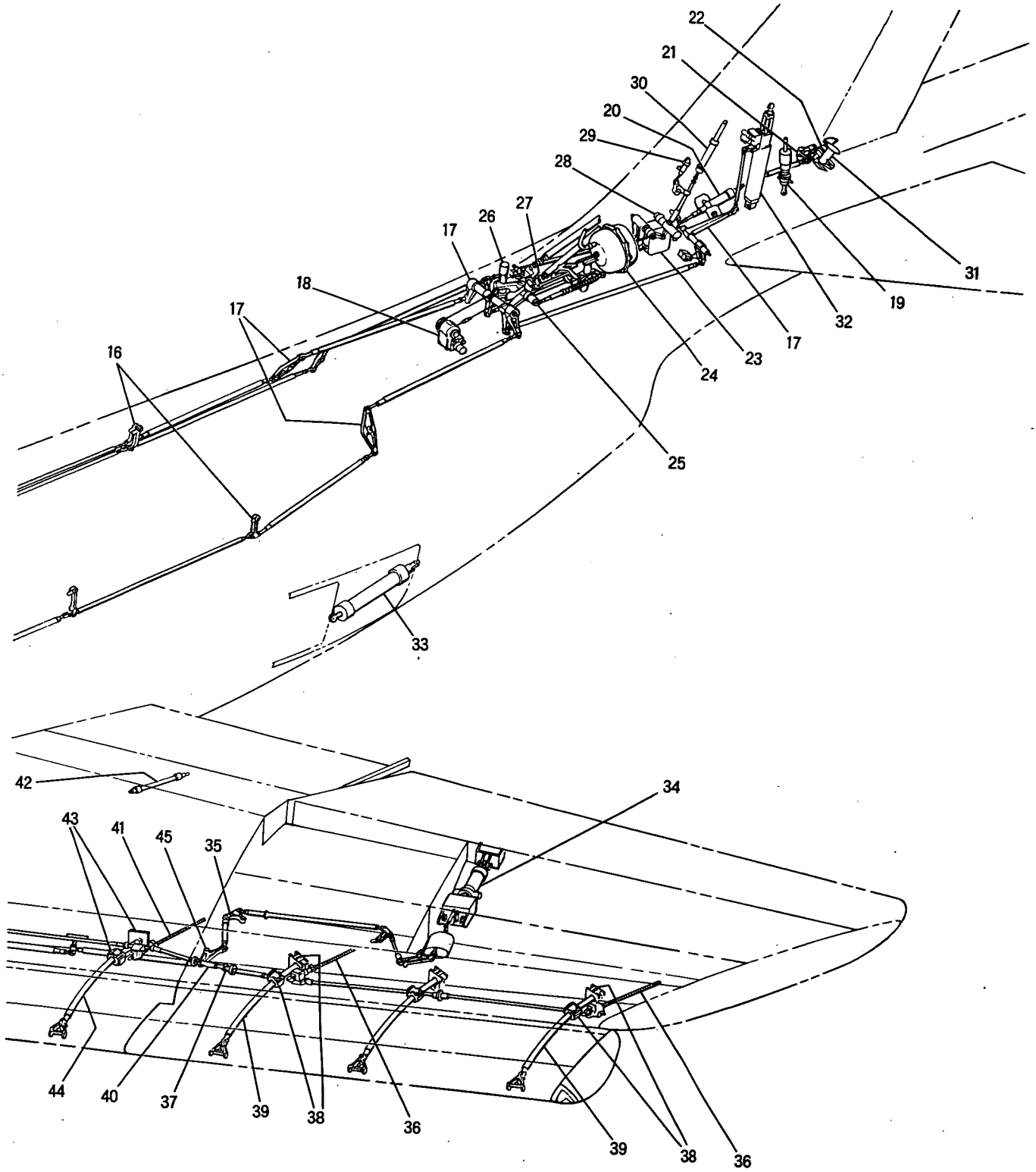

PC25-234

Figure 196 -- Surface Controls System Index (Sheet 2 of 2)

Systems Index

INDEX NO.	NOMENCLATURE	FIGURE NO.
1	Antenna - AN/APG-30	42
2	Radar Assembly - AN/APG-30	42
3	Antenna - AN/APX-6 IFF Radar	42
4	Regulator - MK 14 Mod 0 Voltage	95
5	Computer - MK 86 Mod 0	95
6	Bulb - Resistance And Temperature Thermometers	95
7	Power Supply - MK 75 Mod 0	95
8	Relay - Radio Magnetic Indicator Slaving	95
9	Antenna - AN/APX-6 IFF Radar	95
10	Amplifier - Auto Pilot Stabilator Control	95
11	Amplifier - Radar Altimeter Control	95
12	Receiver/Transmitter - AN/ARC-27 UHF Radio	95
13	Amplifier - ADF Electronic Control	95
14	Relay - Antenna Solenoid	95
15	Switch - UHF Radio Coaxial	95
16	Plug - UHF Radio Coaxial Switch	104
17	Plug - UHF Radio Set Control	102
18	Adapter - Pitot Mast Antenna	101
19	Antenna - Lower UHF	68
20	Panels - AN/APQ-50 Dummy Plugs	73
21	Control - AN/APG-30 Radar Set	67
22	Panel Assembly - Gun Sight Control	67
23	Switch - Throttle Grip Microphone	75
24	Disconnect Assembly - Pilot's Composite	89
25	Unit - AN/ARN-6 Radio Compass	98
26	Antenna - AN/ARN-6 Radio Compass Loop	98
27	Resistor - Radio Compass	98
28	Contact Assembly - AN/ARN-6 Sense Antenna	98
29	Contact Assembly - AN/ARN-6 Sense Antenna	53
30	Antenna - AN/ARN-6 Sense (Canopy Glass)	53
31	Panel - Circuit Breaker	97
32	Mount - IFF Radar Transmitter/Receiver	99
33	Antenna - IFF Radar	47
34	Antenna - IFF Radar	46
35	Control - AN/ARN-6 Radio Compass	79
36	Control - AN/APX-6 IFF Radar	79
37	Control - AN/ARC-27 UHF Radio Set	79
38	Panel - Circuit Breaker	84
39	Mount - ADF Amplifier	100
40	Mount - Receiver/Transmitter UHF Radio	100
41	Gun Sight - MK 11 Mod 1	83
42	Indicator - Course	81
43	Indicator - Radio Altimeter	81
44	Housing - Radar Altimeter Receiver/Transmitter	4
45	Receiver/Transmitter - Radio Altimeter	2
46	Antenna - ADF	136
47	Plug - AN/ARC-27 Coaxial	137
48	Cable - Coaxial	137
49	Jack - Coaxial	137
50	Plug and Cable - Coaxial	39
51	Antenna - Upper Fin UHF	39
52	Transmitter - G-2 Compass	39

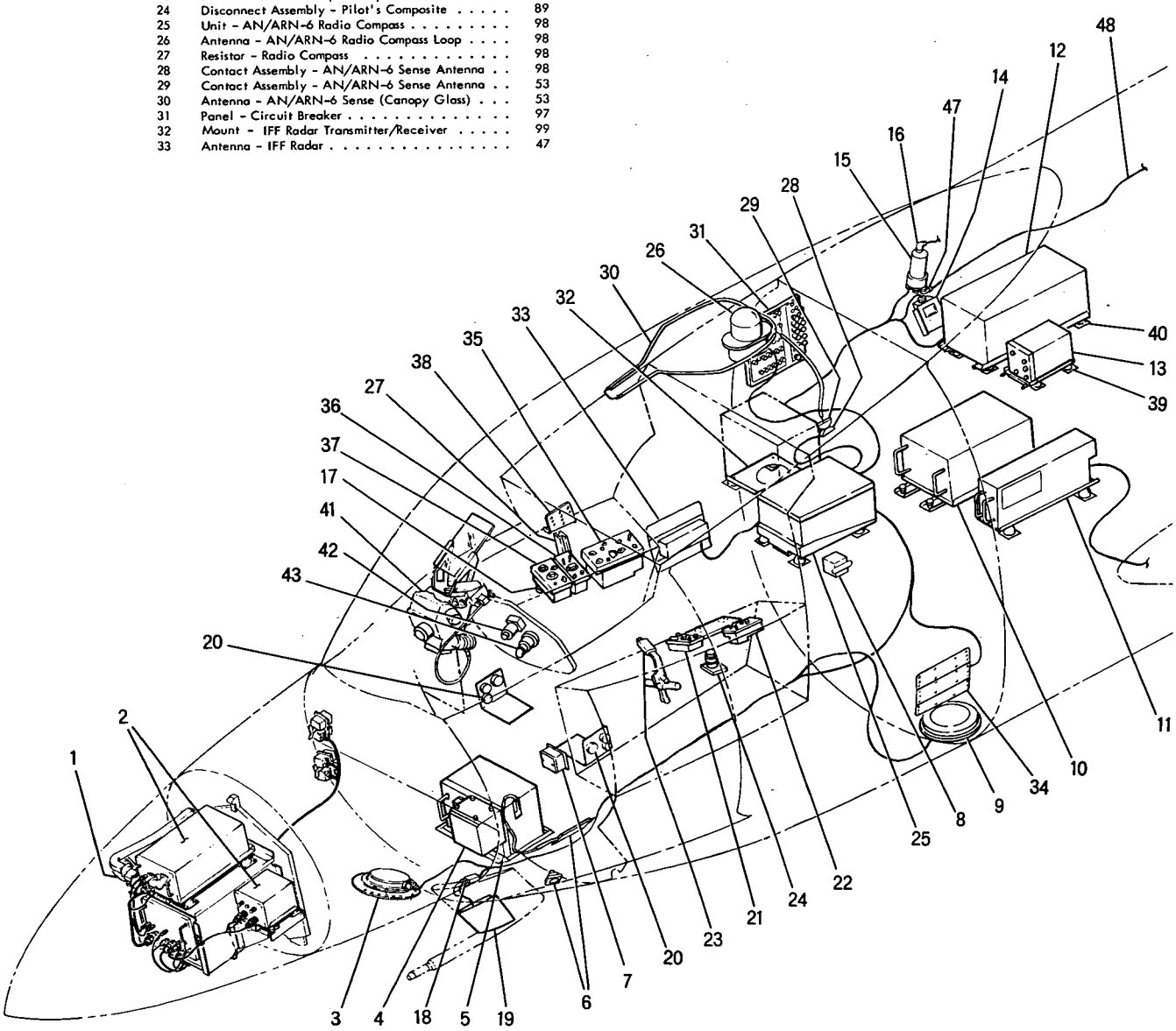

Figure 197 -- Radio And Radar Systems Index (Sheet 1 of 2)

Systems Index

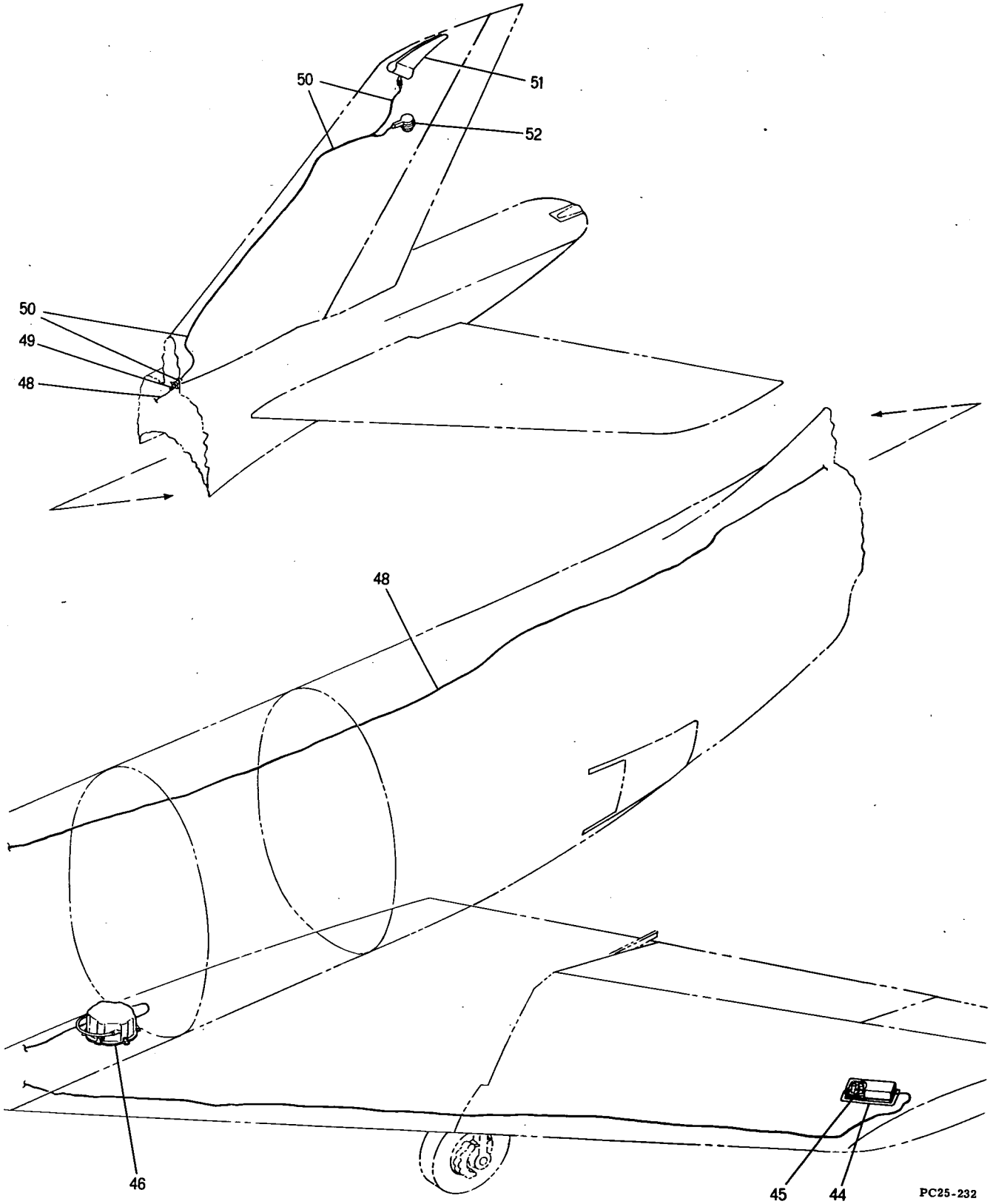

Figure 197 -- Radio And Radar Systems Index (Sheet 2 of 2)

Systems Index

INDEX NO.	NOMENCLATURE	FIGURE NO.
1	Cover Assembly - Inverter Dummy Load	101
2	Plugs - Quick Disconnect	103
3	Light Assembly - Approach	103
4	Plugs - Main Instrument Panel Connector	102
5	Switch - Nose Gear Position Limit	104
6	Light - Equipment Compartment Dome	104
7	Panel - Light Dimming Resistor	105
8	Panel - Warning Lights Dimming Resistor	105
9	Switch - External Canopy	105
10	Panel - Armament Fire Control	105
11	Battery	96
12	Panel - Fuse, Relay and Circuit Breaker	97
13	Amplifier - Fuel Flowmeter	99
14	Unit - Gain Control	99
15	Regulator - A-C Voltage	100
16	Regulator - D-C Voltage	100
17	Unit - A-C Systems Control	100
18	Relay - Gun Camera	100
19	Relay - Reverse Current Cutout	100
20	Handle - Arresting Gear	86
21	Regulator - Voltage	95
22	Relay - Angle-of-Attack	95
23	Inverter	95
24	Power Supply - MK 57 Mod 0	95
25	Regulator - Cabin Temperature Control	95
26	Switch - Air-Speed Pressure	95
27	Amplifier - Stabilator Control	95
28	Gyro - G3 Vertical	95
29	Panel - Equipment Compartment Relay	95
30	Light - Formation	49
31	Camera - Gun	72
32	Heater - Pitot	68
33	Switch - Cabin Air Outlet Dump Valve	94
34	Thermostat - Cabin Air Outlet	94
35	Regulator - Cabin Pressure	94
36	Grip - Control Stick	56
37	Handle - Landing Gear Control	85
38	Panel - Left Hand Console Sub	74
39	Receptacles - Left Hand Console	74
40	Switch - Canopy	73
41	Cover - Circuit Breaker	73
42	Disconnect Assembly - Pilot's Quick	89
43	Receptacles - Right Hand Console	79
44	Panel - Right Hand Console Sub	79
45	Panel - Main Instrument	81
46	Panel - Instrument Sub	82
47	Gun Sight - MK 11 Mod 1	83
48	Panel - Circuit Breaker	84
49	Reel - Shoulder Harness Inertia	90
50	Switch - Inertia	90
51	Actuator - Pilot's Seat Positioning	88
52	Valve - Flow And Temperature And Shutoff	65
53	Unit - Refrigerator Flow Control	65
54	Valve - Armament Bay Temperature Shutoff	65
55	Valve - Gun Charging	63
56	Receptacle - Ammo Box	169
57	Motor - Canopy Normal Operating	54
58	Actuator - Aileron Artificial Feel Trim	55
59	Valve - Slat Hydraulic Selector	71
60	Unit - Capacitor Gaging	119
61	Pump - Transfer	119
62	Valve - Solenoid Pilot	119
63	Transformer And Rectifier	136
64	Panel - Fuel Control Relay	136
65	Unit - Fire Detector Control	136
66	Simulator - Fuel Quantity	136
67	Relay - Fire Detector Test	136
68	Amplifier - Fuel Quantity	136
69	Unit - Pendulum	136
70	Cover - Altitude Switch	136
71	Unit - Auto Pilot Rate Gyro	136
72	Compressor - Pneumatic	135
73	Transmitter - Air Pressure	135
74	Quadrant - Power Control Throttle	75
75	Switch - Pressure Fueling Check	137

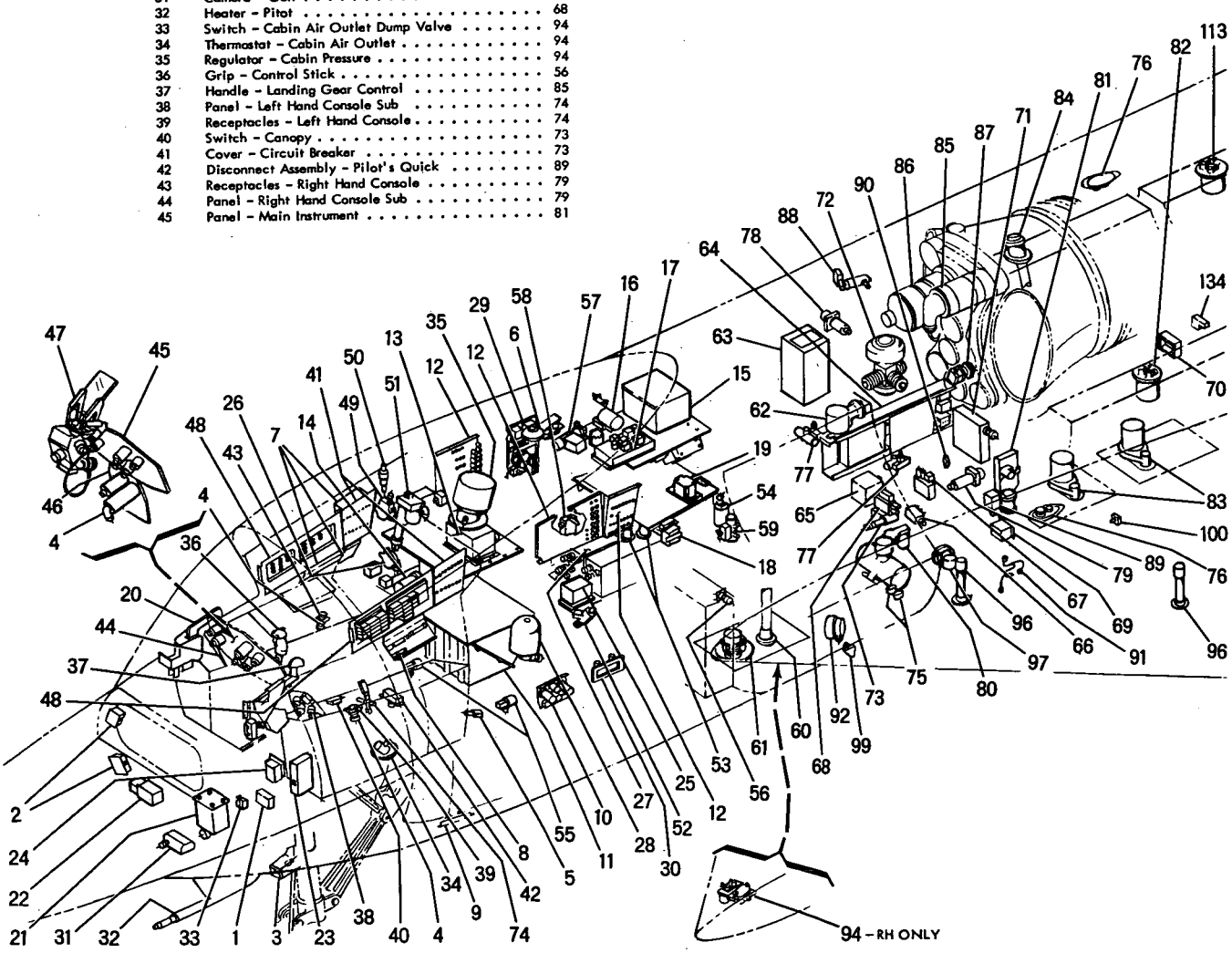

Figure 198 -- Electrical System Index (Sheet 1 of 2)

Systems Index

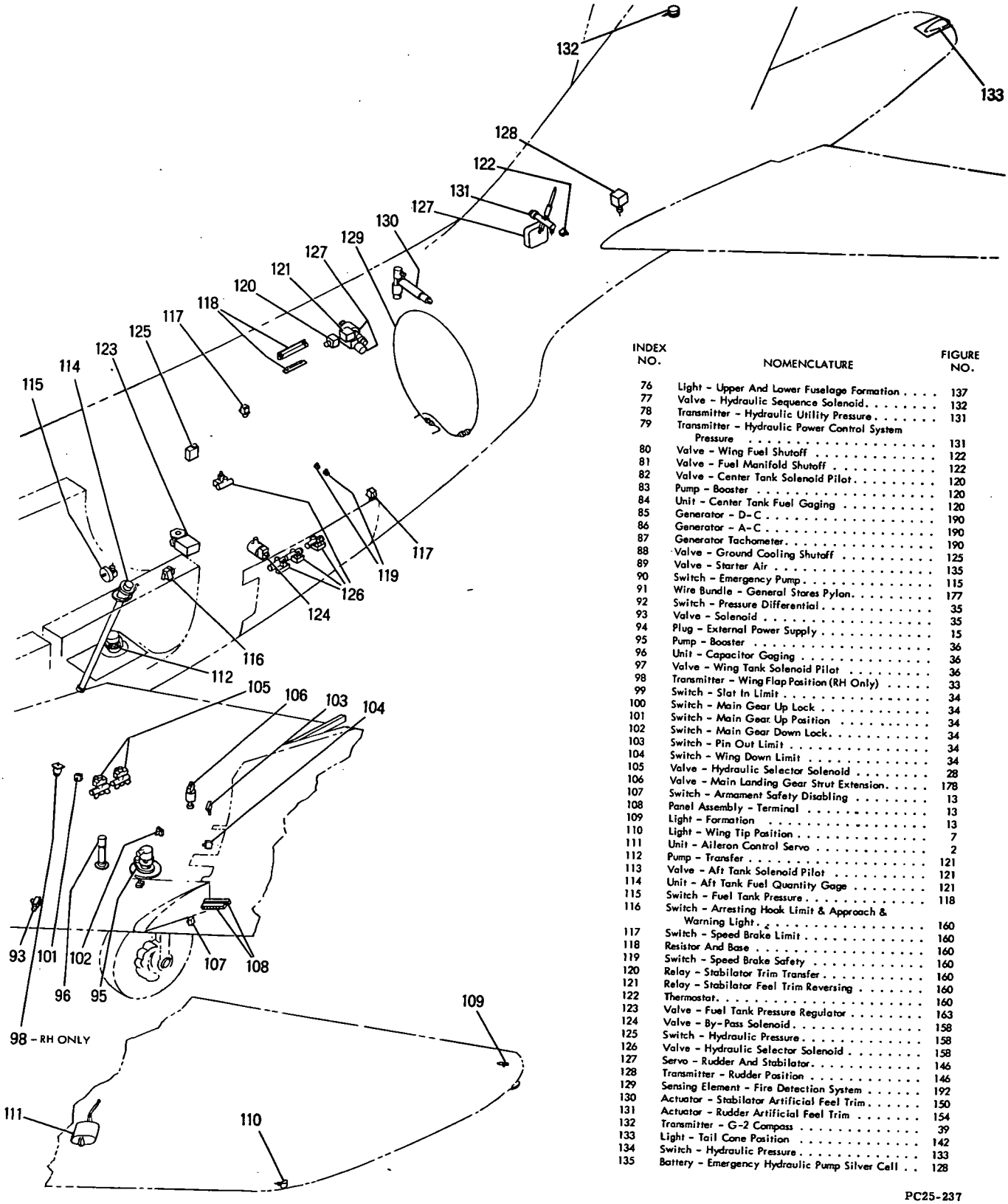

INDEX NO.	NOMENCLATURE	FIGURE NO.
76	Light - Upper And Lower Fuselage Formation	137
77	Valve - Hydraulic Sequence Solenoid	132
78	Transmitter - Hydraulic Utility Pressure	131
79	Transmitter - Hydraulic Power Control System Pressure	131
80	Valve - Wing Fuel Shutoff	122
81	Valve - Fuel Manifold Shutoff	122
82	Valve - Center Tank Solenoid Pilot	120
83	Pump - Booster	120
84	Unit - Center Tank Fuel Gaging	120
85	Generator - D-C	190
86	Generator - A-C	190
87	Generator Tachometer	190
88	Valve - Ground Cooling Shutoff	125
89	Valve - Starter Air	135
90	Switch - Emergency Pump	115
91	Wire Bundle - General Stores Pylon	177
92	Switch - Pressure Differential	35
93	Valve - Solenoid	35
94	Plug - External Power Supply	15
95	Pump - Booster	36
96	Unit - Capacitor Gaging	36
97	Valve - Wing Tank Solenoid Pilot	36
98	Transmitter - Wing Flap Position (RH Only)	33
99	Switch - Slat In Limit	34
100	Switch - Main Gear Up Lock	34
101	Switch - Main Gear Up Position	34
102	Switch - Main Gear Down Lock	34
103	Switch - Pin Out Limit	34
104	Switch - Wing Down Limit	34
105	Valve - Hydraulic Selector Solenoid	28
106	Valve - Main Landing Gear Strut Extension	178
107	Switch - Armament Safety Disabling	13
108	Panel Assembly - Terminal	13
109	Light - Formation	13
110	Light - Wing Tip Position	7
111	Unit - Aileron Control Servo	2
112	Pump - Transfer	121
113	Valve - Aft Tank Solenoid Pilot	121
114	Unit - Aft Tank Fuel Quantity Gage	121
115	Switch - Fuel Tank Pressure	118
116	Switch - Arresting Hook Limit & Approach & Warning Light	160
117	Switch - Speed Brake Limit	160
118	Resistor And Base	160
119	Switch - Speed Brake Safety	160
120	Relay - Stabilator Trim Transfer	160
121	Relay - Stabilator Feel Trim Reversing	160
122	Thermostat	160
123	Valve - Fuel Tank Pressure Regulator	163
124	Valve - By-Pass Solenoid	158
125	Switch - Hydraulic Pressure	158
126	Valve - Hydraulic Selector Solenoid	158
127	Servo - Rudder And Stabilator	146
128	Transmitter - Rudder Position	146
129	Sensing Element - Fire Detection System	192
130	Actuator - Stabilator Artificial Feel Trim	150
131	Actuator - Rudder Artificial Feel Trim	154
132	Transmitter - G-2 Compass	39
133	Light - Tail Cone Position	142
134	Switch - Hydraulic Pressure	133
135	Battery - Emergency Hydraulic Pump Silver Cell	128

PC25-237

Figure 198 -- Electrical System Index (Sheet 2 of 2)

Systems Index

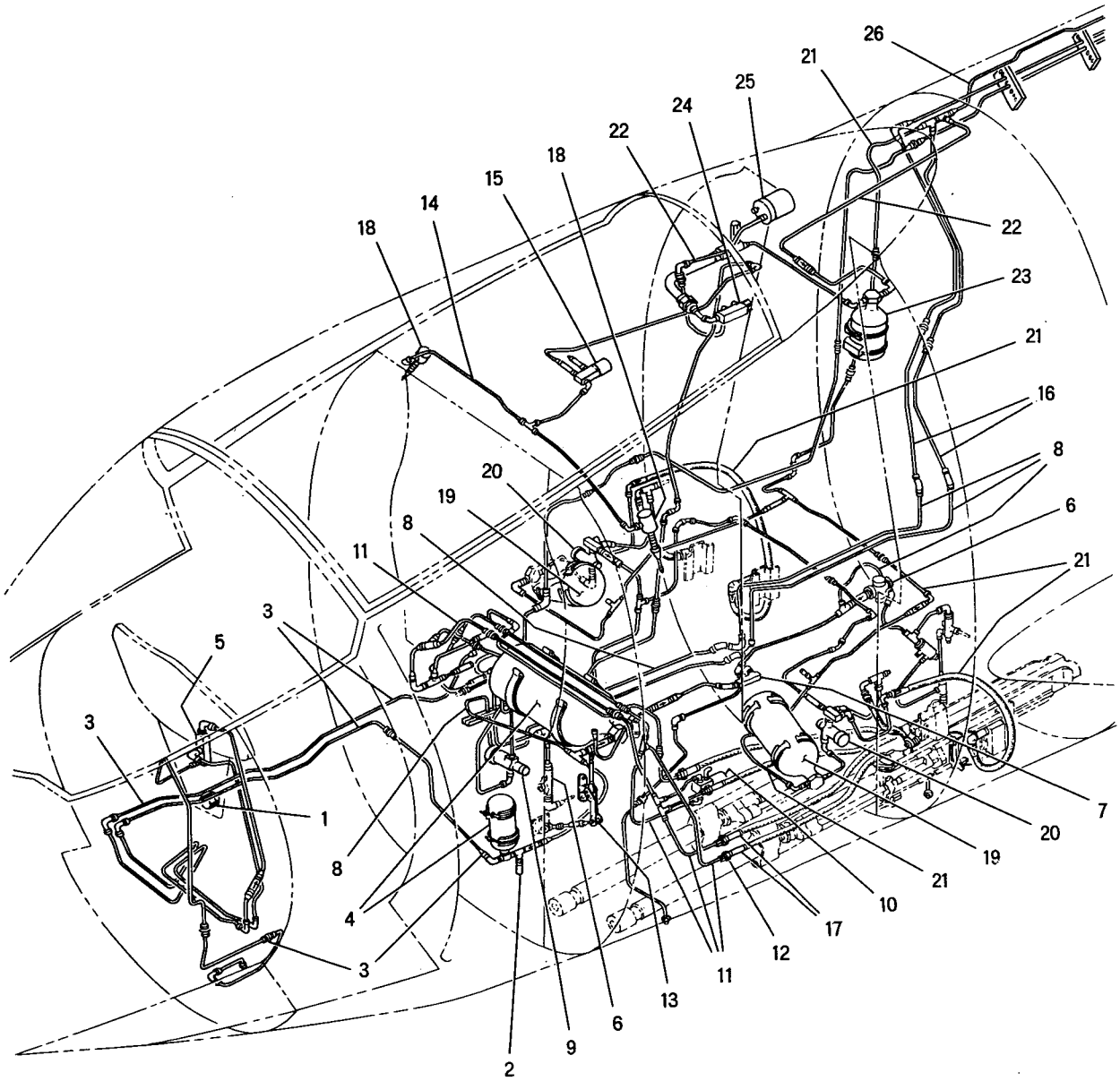

Figure 199 -- High Pressure Air System Index (Sheet 1 of 2)

Systems Index

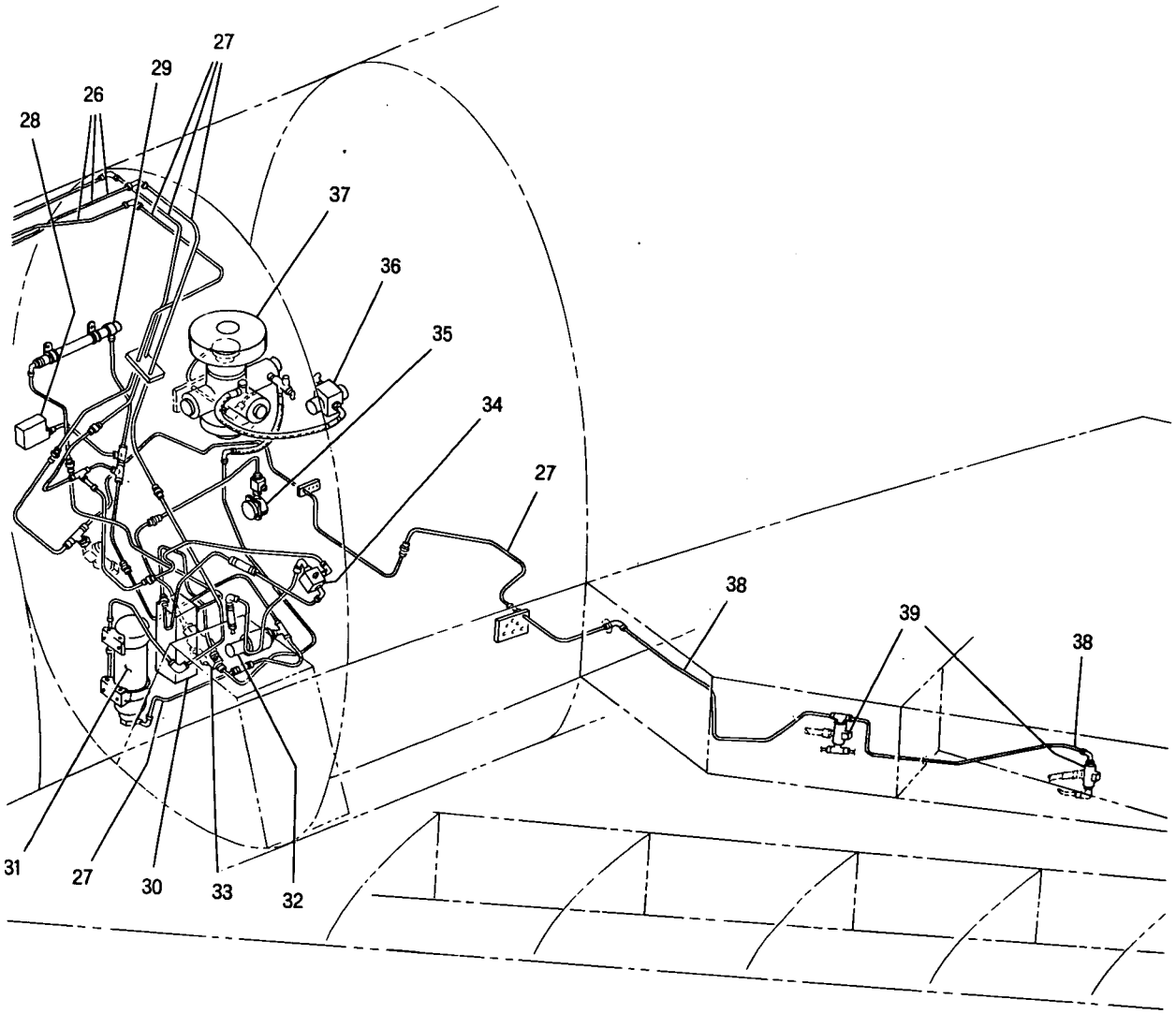

INDEX NO.	NOMENCLATURE	FIGURE NO.
1	Indicator - Air Pressure	82
2	Valve - Air Pressure Relief	69
3	Piping - Forward Fuselage Forward	69
4	Bottle - Air	69
5	Valve - Emergency Landing Gear	85
6	Valve - Hydraulic Shuttle	70
7	Valve - Emergency Slat Control	70
8	Piping - Landing Gear Down & Slat Extend	70
9	Regulator - Gun Charge Air Pressure	63
10	Valve - Shutoff Gun Safe Position Solenoid	63
11	Piping - Gun Charge & Ready Air	63
12	Plug - Gun Hose Quick Disconnect	63
13	Valve & Linkage - Gun Bay Vent	63
14	Piping - Gun Bay Vent Door	63
15	Valve - Gun Gas Door Solenoid	63
16	Piping - Forward Side of Fus. Sta. 232.40	71
17	Receptacle - Gun Hose Quick Disconnect	173
18	Actuator - Gun Bay Louver Door	172
19	Bottle - Air	64
20	Regulator - Gun Feed Air Pressure	64
21	Piping - Gun Feeder Air	64
22	Piping - Canopy Emergency Air	62
23	Bottle - Air	62
24	Valve - Canopy Control Emergency	54
25	Motor - Canopy Mechanism Air	54
26	Piping - Fus. Sta. 232.40 to Fus. Sta. 277.00	130
27	Piping - Engine Accessories Compartment	135
28	Switch - Air Pressure	135
29	Housing - Chemical Drier	135
30	Drier - Mechanical	135
31	Bottle - Air	135
32	Transmitter - Pressure	135
33	Valve - Hydraulic Shuttle	135
34	Valve - Pneumatic Four-Way Sequence	135
35	Gage - Pressure	135
36	Regulator - Pressure	135
37	Compressor - Air	135
38	Piping - Landing Gear Emergency	28
39	Valve - Hydraulic Shuttle	28

PC25-231

Figure 199 -- High Pressure Air System Index (Sheet 2 of 2)

Systems Index

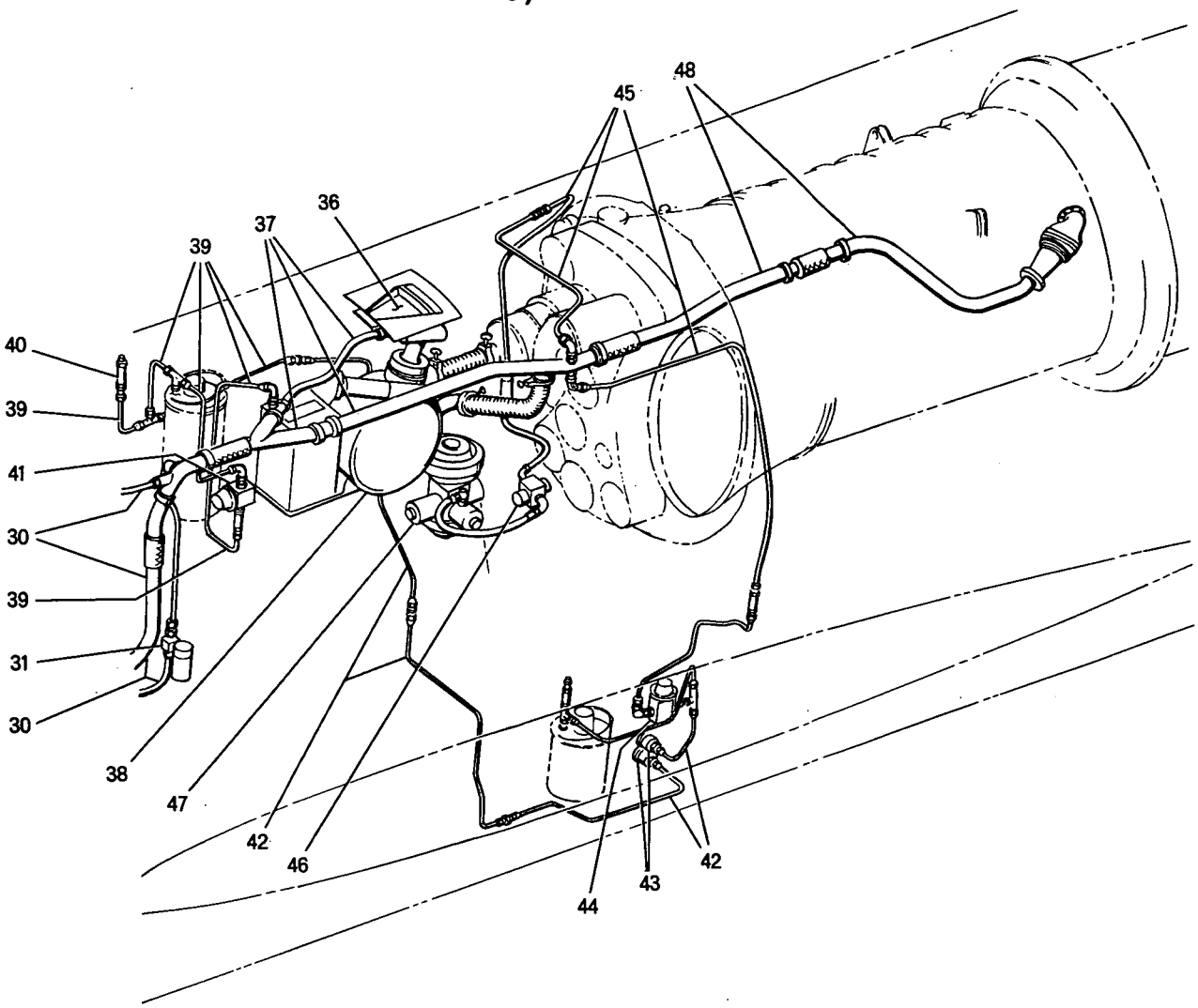

INDEX NO.	NOMENCLATURE	FIGURE NO.
1	Transducer - Airstream Direction	42
2	Piping - Removable Nose	42
3	Duct - Radar Air Intake	43
4	Seal - Canopy	44
5	Fitting - Cockpit Emergency Air	46
6	Fitting - Cockpit Conditioned Air	46
7	Duct - Cabin Air And Windshield Defogging	94
8	Housing - Cabin Air Outlet	94
9	Regulator - Cabin Pressure	94
10	Valve - Cabin Safety	94
11	Controls - Cabin Air And Windshield Defogging	94
12	Handle - Heating and Vent	79
13	Duct - Windshield Defogging	51
14	Indicator & Piping - Turn And Bank	81
15	Tube Assembly - Anti-G Flexible	89
16	Piping - Turn and Bank Pressure	93
17	Control - Air Pressure	93
18	Piping - Anti-G Pressure	93
19	Tube - Anti-G Flexible	93
20	Piping - Air Stream Direction Transducer	93
21	Piping - Air Stream Direction Transducer	65
22	Duct - Cockpit Emergency Air	65
23	Duct - Cabin Air And Windshield Defogging	65
24	Seal - Cockpit Pressure Duct Fume	65
25	Cap Assembly - Air Inlet Ground Pressure Test	65
26	Valve - Flow & Temperature Control & Shutoff	65
27	Valve Assembly - Anti-G Suit Control	65
28	Filter Assembly - Anti-G	65
29	Valve - Canopy Seal Control Unit	65
30	Piping - Forward Fuselage Heat And Vent	65
31	Valve - Electrical Shutoff	65
32	Unit - Refrigeration	66
33	Duct - Refrigeration Unit Cooling Air	47
34	Transducer - Airstream Direction	95
35	Hose - Gun Heater Flexible	171
36	Duct - Engine Accessory Cooling Air Inlet	125
37	Duct - Cooling System	125
38	Chamber Assembly - Plenum	125
39	Piping - Static Air	130
40	Valve - Manually Operated Vent	130
41	Regulator - Reservoir Air Pressure	130
42	Piping - Static Air	135
43	Gage - Air Pressure	135
44	Reducer - Pressure	135
45	Piping - Engine Air	135
46	Regulator - Pressure	135
47	Compressor - Air	135
48	Duct - Engine Air	191

PC25-235

Figure 200 -- Cockpit Heat And Pressurization Systems Index (Sheet 1 of 2)

Systems Index

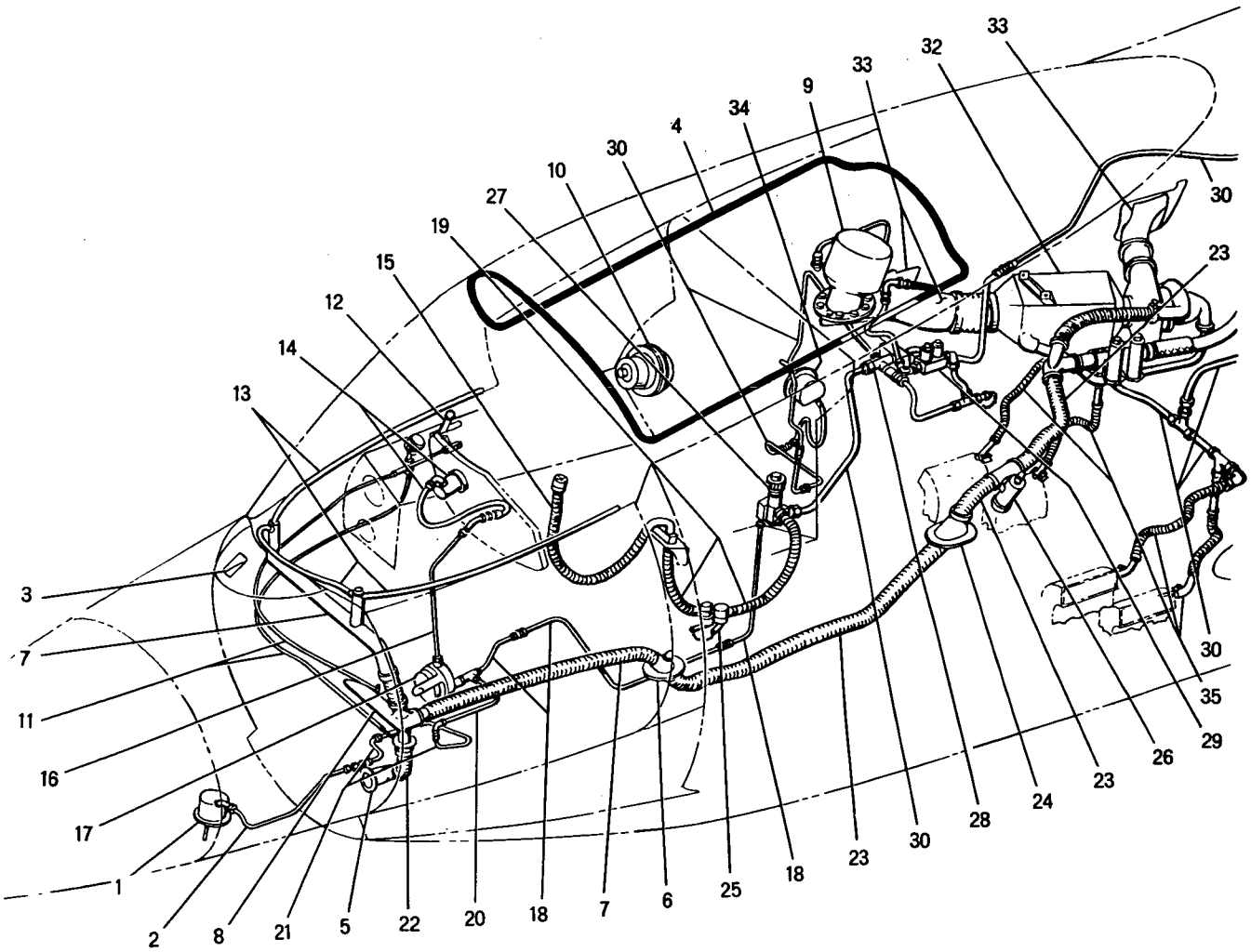

Figure 200 -- Cockpit Heat And Pressurization Systems Index (Sheet 2 of 2)

Systems Index

INDEX NO.	NOMENCLATURE	FIGURE NO.
1	Cylinder - Master Brake	57
2	Accumulator - Brake System	69
3	Gage - Accumulator Pressure	69
4	Piping - Forward Fuselage Forward	69
5	Cylinder - Nose Landing Gear Actuating	184
6	Piping - Forward Fuselage Aft	70
7	Valve - Shuttle	70
8	Piping - Forward Side Fus. Sta. 232.40	71
9	Valve - Selector Solenoid	71
10	Motor - Slat Drive Hydraulic	60
11	Actuator Assembly - Engine Auxiliary Air Door	110
12	Piping - Center Fuselage Forward	130
13	Filter - Utility Pump Suction Line	130
14	Reservoir - Utility	130
15	Reservoir - Power	131
16	Accumulator - Power Control	131
17	Valve - Pressure Relief	131
18	Filter - Power Pump Suction Line	131
19	Piping - Engine Accessories Compartment	131, 132
20	Radiator - Hydraulic Fluid	122
21	Piping - Engine Drain	123
22	Valve - Pressure Relief	132
23	Valve - Selector Solenoid	132
24	Accumulator - Utility System	132
25	Valve - Air Compressor Shutoff	132
26	Compressor - Air	135
27	Pump - Engine Driven Hydraulic	190
28	Hose - Engine Pumps Connector	191
29	Pump - Ram Air	129
30	Piping - Ram Air Pump	129
31	Switch - Hydraulic Pressure	133
32	Piping - Center Fuselage Aft	133
33	Gage - Hydraulic Pressure	158
34	Valve - Solenoid By-Pass	158
35	Piping - Aft Fuselage Forward	158
36	Cylinder - Arresting Gear Shock Absorbing	156
37	Cylinder - Speed Brake Actuating	145
38	Cylinder - Tail Skid Shock Absorbing	144
39	Piping - Aft Fuselage Aft	159
40	Filter - Hydraulic	159
41	Piping - Fin	39
42	Cylinder - Rudder Actuating	146
43	Cylinder - Rudder Feel System	154
44	Cylinder - Stabilator Actuating	37, 38
45	Swivel Assembly	27
46	Piping - Inner Wing Leading Edge	27
47	Cylinder - Main Landing Gear Door Actuating	28
48	Cylinder - Main Landing Gear Uplock Actuating	28
49	Valve - Four Way Sequence	28
50	Cylinder - Main Landing Gear Actuating	28

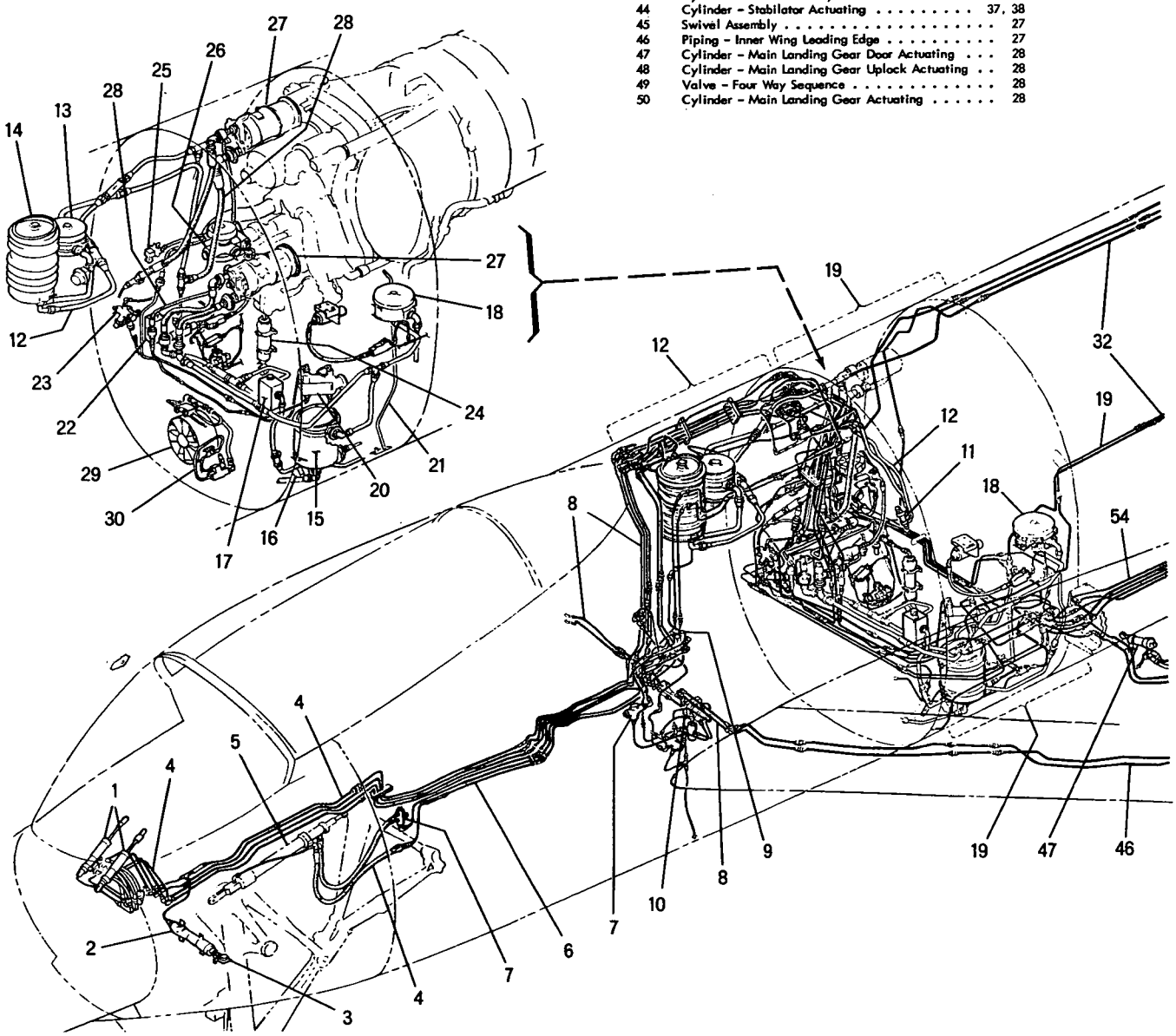

Figure 201 -- Hydraulic System Index (Sheet 1 of 2)

Systems Index

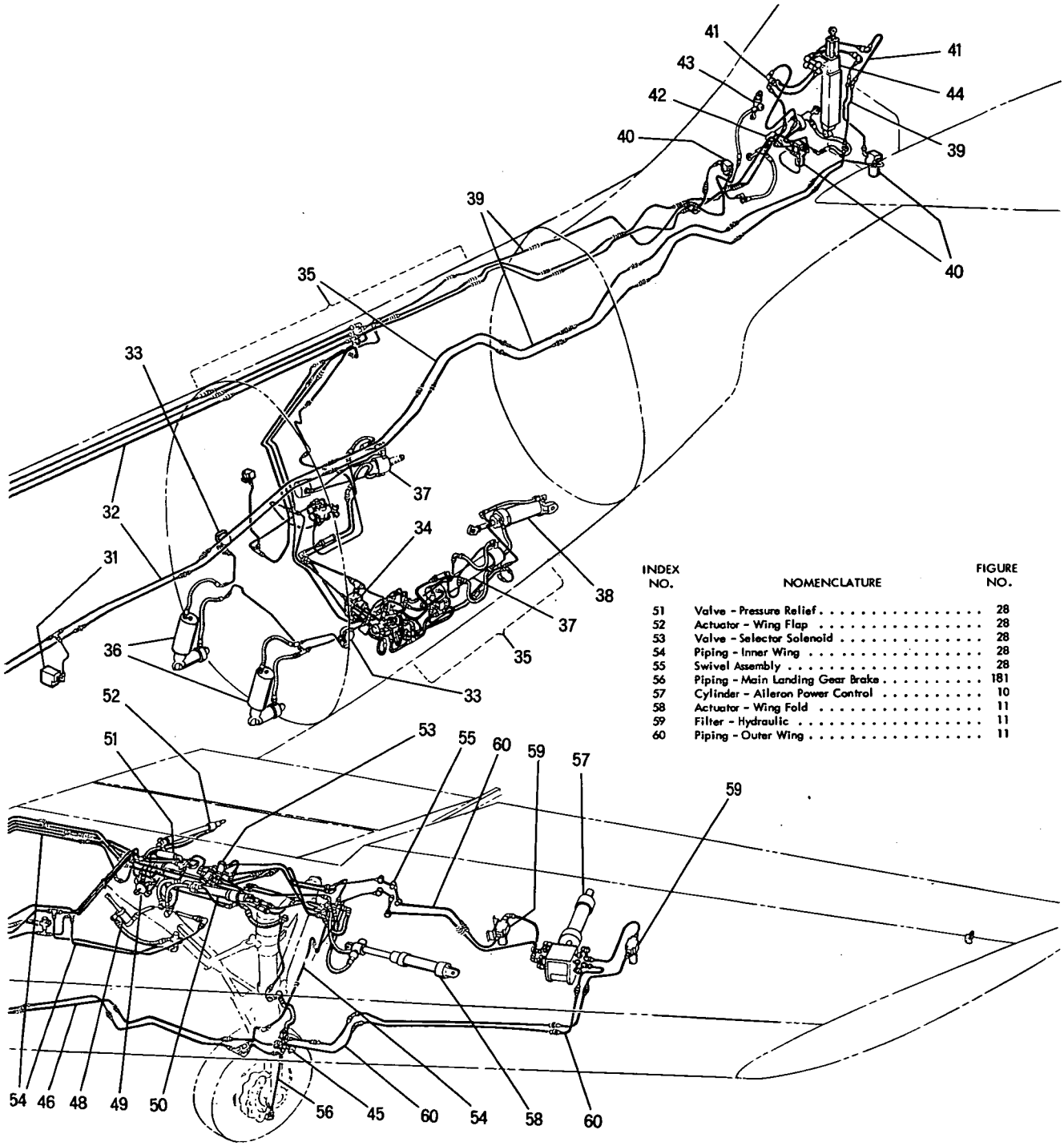

INDEX NO.	NOMENCLATURE	FIGURE NO.
51	Valve - Pressure Relief	28
52	Actuator - Wing Flap	28
53	Valve - Selector Solenoid	28
54	Piping - Inner Wing	28
55	Swivel Assembly	28
56	Piping - Main Landing Gear Brake	181
57	Cylinder - Aileron Power Control	10
58	Actuator - Wing Fold	11
59	Filter - Hydraulic	11
60	Piping - Outer Wing	11

PC25-238

Figure 201 -- Hydraulic System Index (Sheet 2 of 2)

Systems Index

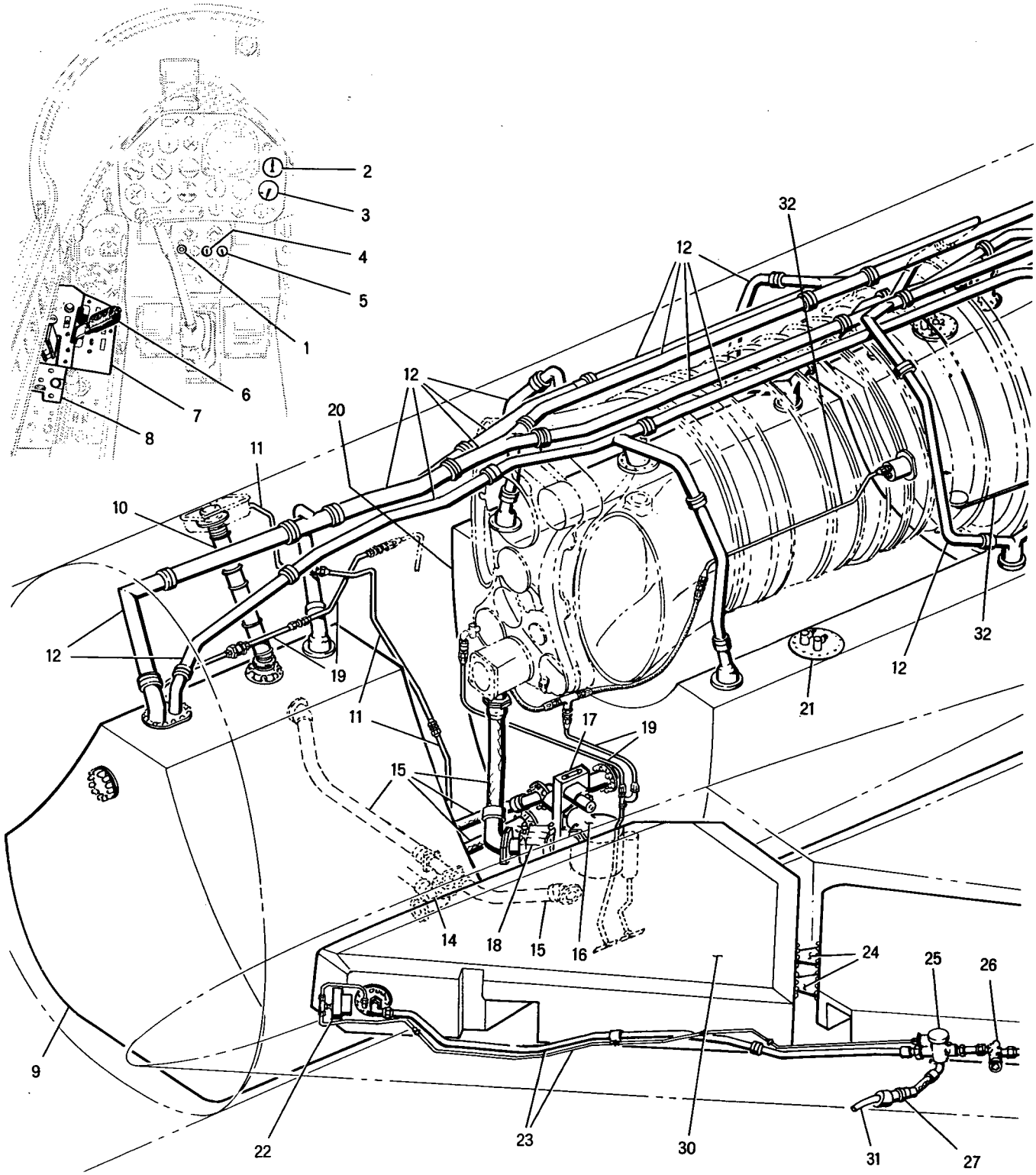

Figure 202 -- Fuel System Index (Sheet 1 of 2)

Systems Index

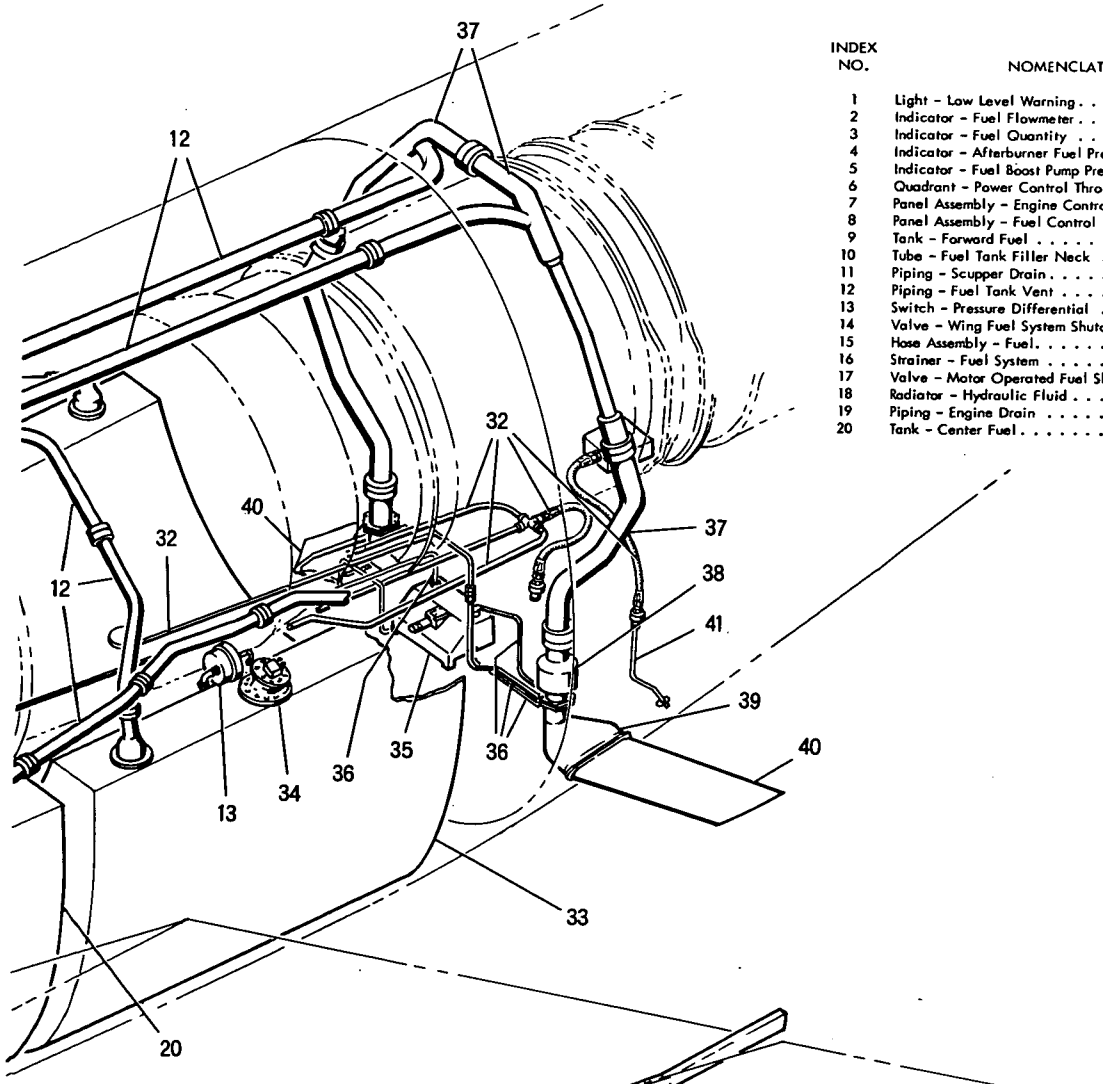

INDEX NO.	NOMENCLATURE	FIGURE NO.
1	Light - Low Level Warning	82
2	Indicator - Fuel Flowmeter	81
3	Indicator - Fuel Quantity	81
4	Indicator - Afterburner Fuel Pressure	82
5	Indicator - Fuel Boost Pump Pressure	82
6	Quadrant - Power Control Throttle	75
7	Panel Assembly - Engine Control	74
8	Panel Assembly - Fuel Control	74
9	Tank - Forward Fuel	119
10	Tube - Fuel Tank Filler Neck	119
11	Piping - Scupper Drain	119
12	Piping - Fuel Tank Vent	118
13	Switch - Pressure Differential	118
14	Valve - Wing Fuel System Shutoff	122
15	Hose Assembly - Fuel	122
16	Strainer - Fuel System	122
17	Valve - Motor Operated Fuel Shutoff	122
18	Radiator - Hydraulic Fluid	122
19	Piping - Engine Drain	123
20	Tank - Center Fuel	120

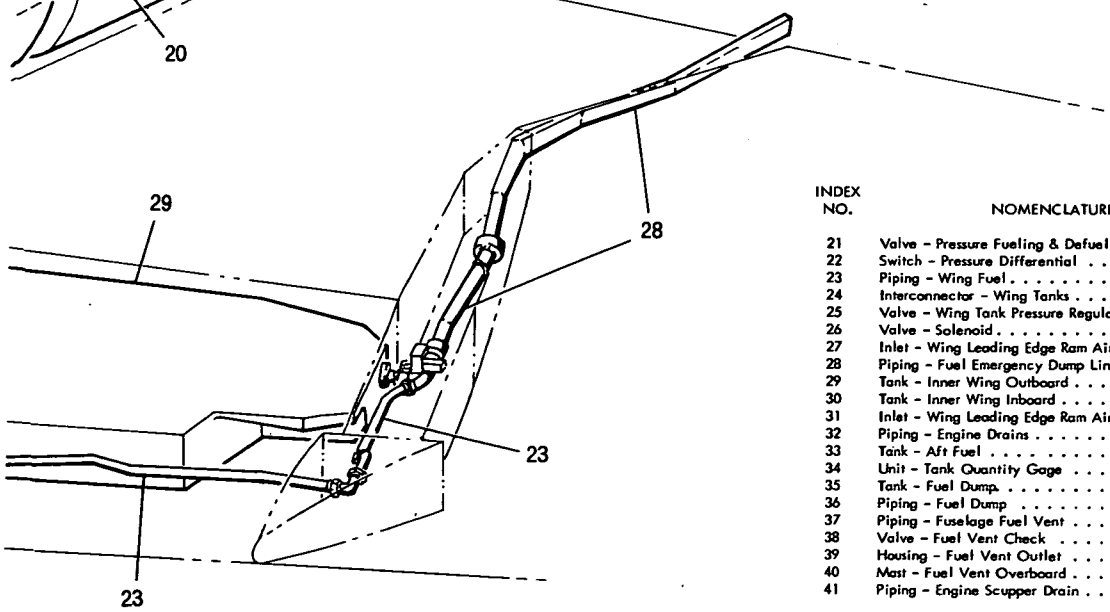

INDEX NO.	NOMENCLATURE	FIGURE NO.
21	Valve - Pressure Fueling & Defueling	120
22	Switch - Pressure Differential	35
23	Piping - Wing Fuel	35
24	Interconnector - Wing Tanks	35
25	Valve - Wing Tank Pressure Regulator	35
26	Valve - Solenoid	35
27	Inlet - Wing Leading Edge Ram Air	35
28	Piping - Fuel Emergency Dump Line	35
29	Tank - Inner Wing Outboard	36
30	Tank - Inner Wing Inboard	36
31	Inlet - Wing Leading Edge Ram Air	17
32	Piping - Engine Drains	191
33	Tank - Aft Fuel	121
34	Unit - Tank Quantity Gage	121
35	Tank - Fuel Dump	161, 162
36	Piping - Fuel Dump	161, 162
37	Piping - Fuselage Fuel Vent	163
38	Valve - Fuel Vent Check	163
39	Housing - Fuel Vent Outlet	163
40	Mast - Fuel Vent Overboard	163
41	Piping - Engine Scupper Drain	141

PC25-233

Figure 202 -- Fuel System Index (Sheet 2 of 2)

Systems Index

INDEX NO.	NOMENCLATURE	FIGURE NO.
1	Mast Assembly - Pitot	68
2	Piping - Pitot	68
3	Piping - Static	68
4	Manifold Assembly - Static Pressure	68
5	Indicator - Air Speed And Mach Number	81
6	Altimeter	81
7	Indicator - Rate of Climb	81
8	Piping - Pitot	93
9	Piping - Static	93
10	Tube - Oxygen Flexible	93
11	Disconnect Assembly - Pilot's Composite	89
12	Tube - Oxygen Flexible	89
13	Regulator - Oxygen	74
14	Cylinder - Oxygen	67
15	Piping - Oxygen	67
16	Filler Assembly - Oxygen	67
17	Regulator - Cabin Pressure	94
18	Valve - Cabin Safety	94
19	Valve - Dump	94
20	Switch - Airspeed Pressure	95
21	Unit - Gain Control	99

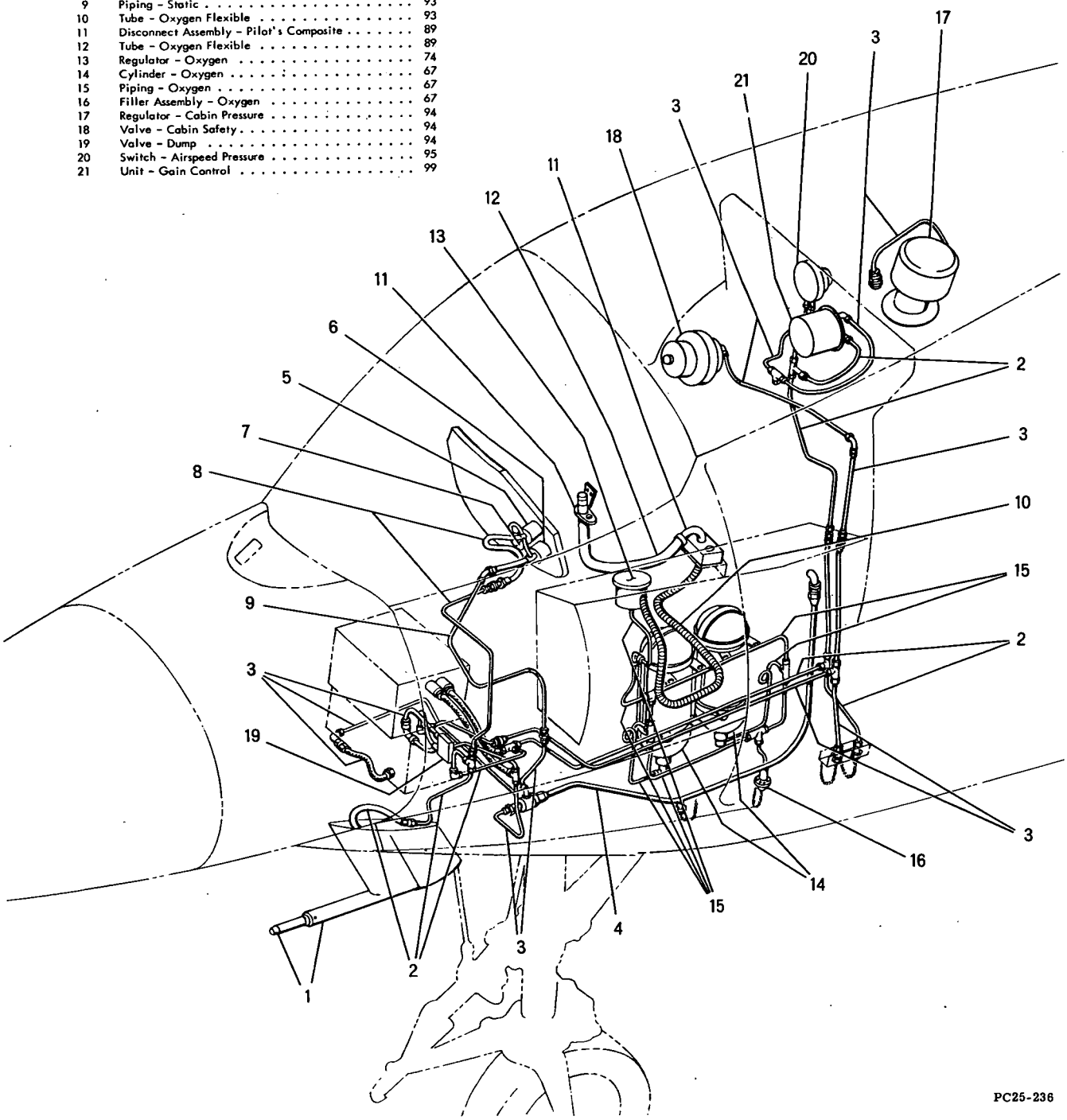

Figure 203 -- Oxygen And Pitot And Static Systems Index

Systems Index

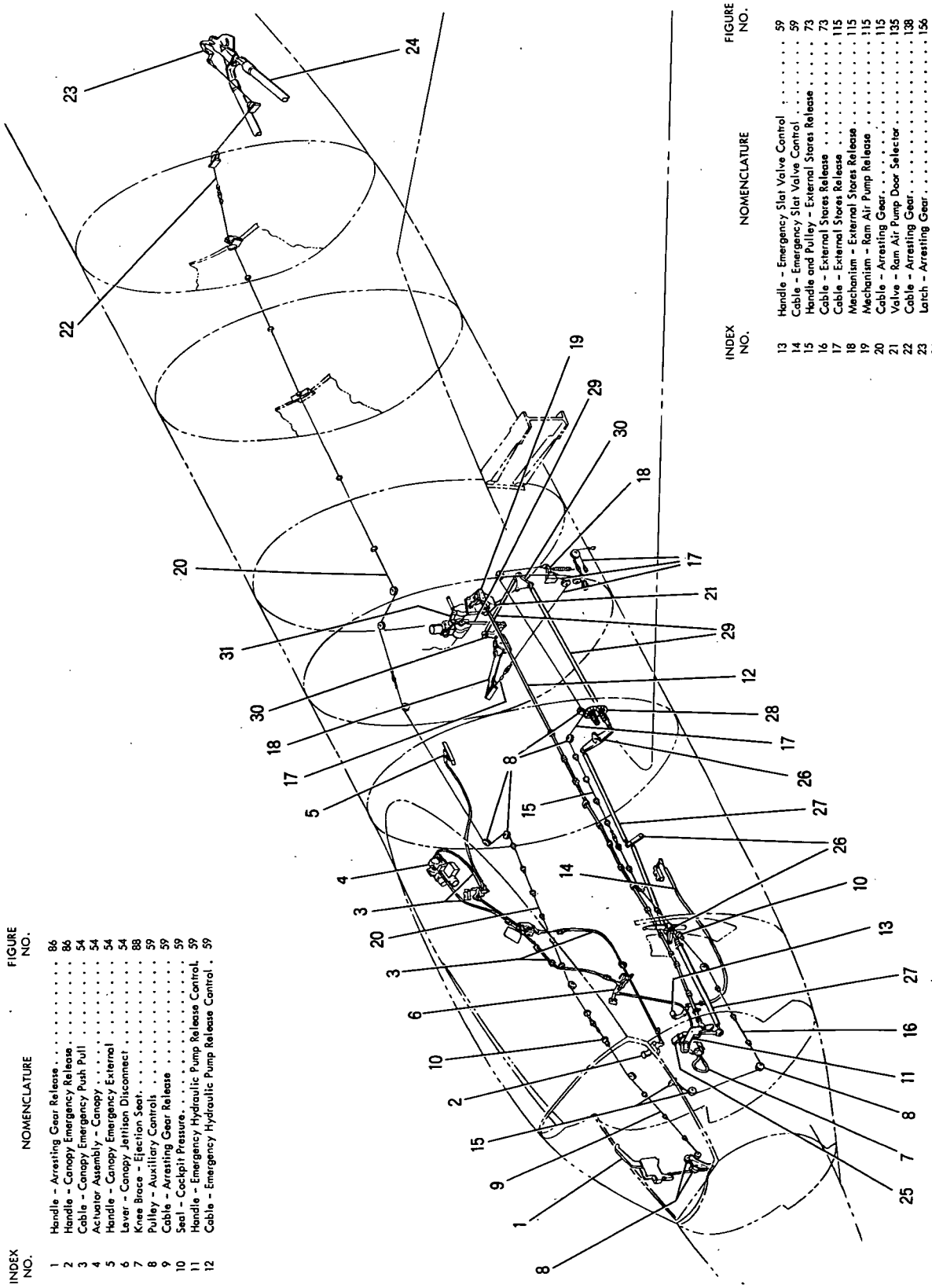

INDEX NO.	NOMENCLATURE	FIGURE NO.
1	Handle - Arresting Gear Release	86
2	Handle - Canopy Emergency Release	86
3	Cable - Canopy Emergency Push Pull	54
4	Actuator Assembly - Canopy	54
5	Handle - Canopy Emergency External	54
6	Lever - Canopy Jettison Disconnect	54
7	Knee Brace - Ejection Seat	88
8	Pulley - Auxiliary Controls	59
9	Cable - Arresting Gear Release	59
10	Seal - Cockpit Pressure	59
11	Handle - Emergency Hydraulic Pump Release Control	59
12	Cable - Emergency Hydraulic Pump Release Control	59
13	Handle - Emergency Slat Valve Control	59
14	Cable - Emergency Slat Valve Control	59
15	Handle and Pulley - External Stores Release	73
16	Cable - External Stores Release	73
17	Cable - External Stores Release	115
18	Mechanism - External Stores Release	115
19	Mechanism - Ram Air Pump Release	115
20	Cable - Arresting Gear	115
21	Valve - Ram Air Pump Door Selector	135
22	Cable - Arresting Gear	138
23	Latch - Arresting Gear	156
24	Arresting Gear	156
25	Quadrant - Power Control Throttle	75
26	Bell Crank - Engine Control	61
27	Rod - Engine Control	61
28	Seal - Control Rod Fume	116
29	Rod - Engine Control	117
30	Bell Crank - Engine Control	117
31	Control Arm - Engine Fuel Regulator	190

Figure 204 -- Auxiliary Controls And Engine Controls Systems Index

FIGURE & INDEX NUMBER	PART NUMBER	1 2 3 4 5 6 7 DESCRIPTION	UNITS PER ASS'Y	USABLE ON CODE
		THIS PAGE INTENTIONALLY BLANK		

SECTION III
NUMERICAL INDEX

CONTRACTOR'S PARTS
SPECIAL TOOLS AND EQUIPMENT
STANDARD AND VENDOR PARTS

STOCK NUMBER	PART NUMBER	DESCRIPTION	SOURCE CODE	USABLE ON CODE	MICROFILM INDEX
	MDE2359	Pod, Loose Equipment			
R82MDA	MDE2505-1	Sling Assy, Airplane Hoisting	P1		
R82MDA	MDE2509-1	Pad Assy, Fwd Fuselage Jack	P1		
R82MDA	MDE2509-3	Pad Assy, Wing Jack	P1		
R82MDA	MDE2510-1	Guard Assy, Engine Air Duct LH	P1		
R82MDA	MDE2510-2	Guard Assy, Engine Air Duct RH	P1		
	MDE2515-1	Track Assy, Engine Removal	P1		
R82MDA	MDE2515-301	Track Assy, Engine Removal			
R82MDA	MDE2516-1	Pad Assy, Aft Fuselage Jack	P1		
R82MDA	MDE2520-1	Strut Assy, Wing Jury	P1		
	MDE2535-1	Cover Assy, Engine Air Duct LH	M1		
	MDE2535-2	Cover Assy, Engine Air Duct RH	M1		
	MDE2537-1	Cover Assy, Pitot Tube	M1		
	MDE2538-1	Bag, Jack Pad Stowage	M		
R82MDA	MDE2542-1	Ladder Assy, Pilots Access	P1		
R82MDA	MDE2543-1	Lock Assy, Surface Control	P1		
	MDE2555-1	Lock Assy, Main Landing Gear Ground	M1		
	MDE2556-1	Lock Assy, Nose Landing Gear Ground	M1		
	MDE2560-1	Cover Assy, Cockpit Canopy	M1		
	MDE2564-1	Cover Assy, Engine Tail Cone	M1		
R82MDA	MDE2566-1	Cover Assy, Engine Cooling Duct	P1		
R82MDA	MDE2567-1	Cover Assy, Engine Accessory Cooling Duct	P		
R82MDA	MDE2568-1	Adapter Assy, Engine & Afterburner Handling			
R82MDA	MDE2575-301	Strut Assy, Speed Brake Safety			
	MDE2584-1	Lock Assy, Arresting Hook	M1		
R82MDA	MDE2585-3	Ring, Removable Nose Hoisting	P1		
R82MDA	MDE15218-7	Cap Assy, Nozzle Protector			
	MDE25115-301	Cover Assy, Wing Butt LH			
	MDE25115-302	Cover Assy, Wing Butt RH			
R82MDA	MDE25116-1	Winch Assy, Engine Removable & Installation	P1		
	MDE25116-301	Winch Assy, Engine Removable & Installation			
	MDE25134-1	Unit, Mobile Compressor Power			
R82MDA	MDE25136-1	Guard, Pilots Ejection Seat Warning	P		
	MDE25138-1	Fitting Assy Hoist Support			
R82MDA	MDE25139-1	Tow Bar Assy, Universal Fwd & Aft Towing	P1		
	MDE25163-1	Guard Assy, Engine Air Duct LH			
	MDE25163-301	Guard Assy, Engine Air Duct LH			
	MDE25163-2	Guard Assy, Engine Air Duct RH			
	MDE25163-302	Guard Assy, Engine Air Duct RH			
	MDE25165-1	Cover Assy, Engine Air Duct LH			
	MDE25165-2	Cover Assy, Engine Air Duct RH			
	MDE25167-1	Dolly, Removable Nose Handling			
	MDT2502-1	Kit, Boresight	*		
R82MDA	MDT2515-1	Wrench, Nose LG Metering Tube Removal	P		
R82MDA	MDT2517-1	Rod, Gun Firing Circuits Checking Ram			
R82MDA	MDT2518-3	Wrench, Aft Fus Lower Longeron Splice Bolt			
R82MDA	MDT2518-5	Bar, Aft Fus Lower Longn Splice Bolt Extension			
R82MDA	MDT2519-1	Puller, Arresting Gear Bushing Instl & Removal	P		
R82MDA	MDT2520-3	Wrench, Face Spanner Damper Assembly	P		
R82MDA	MDT2524-1	Fixture Assy, Rocket Launcher Boresight			
R82MDA	MDT2525-1	Fixture, Angle Of Attack Detector Locating			
R82MDA	MDT2526-1	Wrench Assy, Wheel Retainer Nut			
R82MDA	MDT2578-1	Gage Assy, Main LG Inbd Linkage Over Center			
R82MDA	MDT25130-3	Wrench, Spanner Adapter	P		
R82MDA	MDT25130-5	Wrench, Spanner Adapter	P		
R82MDA	MDT25130-7	Wrench, Spanner Adapter	P		
R82MDA	MDT25130-9	Wrench, Spanner Adapter	P		
R82MDA	MDT25130-11	Wrench, Spanner Adapter	P		

STOCK	PART NUMBER	SOURCE CODE	FIGURE & INDEX NO.	QTY. PER A/C	MICROFILM INDEX
	4-41205			1	
	4-41206		184 - 39		A-3
	15-07267- 3		54 - 91	1	
	15-11203	P	108 - 17	8	A-4
			109 -		
			109 - 80		
			112 - 15		
			141 - 35		
			141 - 51		
	15-11203- 3	M1	108 -	8	
			109 - 22		
			109 -		
			112 - 16		
			141 -		
			141 -		
	15-11203- 5	M1	108 -	8	
			109 - 24		
			109 -		
			141 -		
			141 -		
	15-35327- 13	X1	53 - 66	1	
	15-35327- 17		54 - 95	1	
	15-35350	*	54 - 89	1	
	15-35401- 3	M1	45 - 49	2	
	15-35402- 3	M1	45 - 50	2	
	15-35454- 3	P	54 - 71	1	
	15-35474- 3	M1	54 - 9	12	
			90 - 9		
	15-35474- 4	M1	54 - 10	12	
			90 - 10		
	15-35476- 1	A	54 - 85	1	
	15-35477- 1	M1	54 - 87	1	
	15-35477- 3	M		1	
	15-35478- 3	M1	54 - 88	1	
	15-35496- 3	P	53 - 49	1	
	15-35501- 3	M1		1	
	15-35569- 3	M1	53 - 69	2	
	15-35579- 3		53 - 53	1	
	15-41230- 1	M	184 - 38	1	
	15-41230- 3	M		1	
	15-42075	M1	57 - 1	2	
	15-50106- 1	P	35 - 52	8	
			118 -		
			191 - 26		
			191 - 41		
	15-50106- 3	M1	118 - 50	8	
			191 -		
			191 -		
	15-50107- 3	M1	35 -	10	
			118 - 51		
			191 -		
			191 -		
	15-51022- 5	M1	164 - 13	4	
	15-51031- 3	M1	164 - 12	4	
	15-58034- 3		191 -	4	
			191 -		
	15-58359		191 - 44	4	
			191 - 57		
	15-58359- 3			4	
	15-58471- 3C	X1		1	
	15-58471- 5	M1	114 - 42	1	
	15-60225	P1	72 - 9	3	
			92 - 28		
	15-60225- C	X1		1	
	15-60443- 3	M	39 - 20	1	
	15-60507- 1	M1	82 -	1	
	15-60507- 3	M1	82 - 18	1	
	15-60571- 3	M1		1	
R82MDA-	15-68142	P1	85 - 34	1	A-163
	15-68143	M	85 - 36	1	A-164
	15-68148	M1	85 - 38	1	A-5
	15-68151	P	85 - 37	1	A-6
	15-78085	M1		4	
	15-78085- 3	M1	97 - 4	2	
			160 - 22		
	15-80097	M1		1	
	15-80098	M1		1	
	15-80163	M1	88 - 27	1	
	15-80184	M	65 - 32	3	
			65 - 46		
	15-80268	M1	92 - 23	1	
	15-80289	M1	53 - 32	1	
	15-80289- 3	M1		1	
	15-80290- 3C	X1		1	
	15-80290- 5	X1		1	
	15-80290-301	X1	53 - 41	1	
	15-80292- 5	M1		1	
	15-80306	M1	53 - 39	1	
	15-80332	M1	53 - 36	1	
	15-80333	M1	53 - 35	1	
	15-80334	M1	53 - 37	1	
	15-80337	M1	53 - 40	1	
	15-80433- 3	M1	92 - 24	1	
	15-80462	P1	65 - 45	1	
	15-80462- C	X1		1	
	15-80465- 3	M1	88 - 27	1	

STOCK	PART NUMBER	SOURCE CODE	FIGURE & INDEX NO.	QTY. PER A/C	MICROFILM INDEX
	15-80623- 3	M1	87 - 26	4	
			91 - 53		
	15-80648- 1	M1	90 - 17	1	
	15-80648- 3	M1		1	
	15-80649- 3	M1	90 -	1	
	15-80663- 3	M		1	
	15-80726- 3	M	91 - 19	2	
	15-80729- 3	M1	92 - 22	1	
	15-80730- 3	M1	92 - 25	1	
	15-80735- 1	M1	92 -	2	
	15-80735- 7	M1		4	
	15-80735- 9	M1		2	
	15-80735- 11	M1		2	
	15-80735- 13	M1		2	
	15-80752- 3	M1	88 - 17	2	
	15-80763- 1	P1	92 - 20	2	B-361
	15-80763- 5	X1		2	
	15-80763- 7	X1		2	
	15-80763- 9	X1		2	
	15-80766- 3	M	92 - 5	1	
	15-80779- 3	P	92 - 13	1	
	15-80785- 3	M1		4	
	15-80786- 3	M1		2	
	15-80791- 3	M1	92 - 19	1	
	15-83034	M1	65 - 18	1	
	15-83034- 3	M1		1	
	15-83122	M1	45 - 36	1	
	15-83139	M	65 -	1	
	15-83140	M	65 -	6	
			68 - 48		
	15-83277- 3	M1	59 - 3	3	
			115 - 34		
	15-83294- 3	M1		1	
	15-84098	M	86 - 32	2	
	15-84111- 5	P1	86 - 18	1	
	15-84124	M1	86 - 26	1	
	15-84125	M	86 - 28	1	
	15-84152	M1	86 - 29	1	
	15-87067- 1	M	98 - 11	1	
	15-87067- 3	M		1	
R82MDA-	19-21039- 3	*	37 - 3	44	
			38 - 3		
	19-35182- 3	M1	53 - 64	2	
	19-42133- 3	M1	182 - 15	8	A-7
R82MDA-	19-45161- 5	P1	187 - 15	1	
R82MDA-	19-45162- 5		187 - 16	1	
R82MDA-	19-45163- 5	P1	187 - 20	1	
	19-45164- 3	M1	187 - 11	1	
	19-45165- 3		187 - 12	1	
R82MDA-	19-45166- 3	P1	187 - 6	1	
R82MDA-	19-45167- 3	P1	187 - 1	1	
R82MDA-	19-45169- 3	P	187 - 28	1	
	19-45171- 3	M1	187 - 5	1	
	19-45172- 7	M1		1	
	19-45172- 9	M1		1	
	19-45172-301	M1	187 - 24	1	
	19-45177- 3		187 - 19	1	
	19-45178- 3	M1	187 - 18	1	
	19-51017- 3	M1	124 - 22	3	
	19-51032- 3	M1	164 - 18	4	
	19-51047- 3	M1	108 - 20	2	A-165
	19-58140- 5	M1		12	
	19-60031- 3	X1	79 - 12	5	
	19-61003- 3	M1	57 - 2	2	
	19-61024- 3	M1	57 - 42	1	
	19-61075- 5	M1	10 - 11	14	
			10 - 21		
			55 - 82		
			57 - 13		
			117 - 25		
	19-68105- 3	M1	85 - 28	1	A-8
	19-69075- 5			2	
	19-78046- 3	M1	98 -	2	
	19-78181- 7	M1	78 - 13	1	C-316
	19-78193- 1	M1	97 - 2	2	
			160 -		
	19-78193- 3	M		2	
	19-80116- 3	M1	92 - 14	2	
	19-82041-156	M1	75 - 13	1	
	19-82054- 3	M	94 - 59	1	
	19-84100- 3	M1	86 - 30	1	
	19-84100- 5	M1	86 - 24	1	
	19-84100- 7	M1	86 - 27	1	
	19-84100-301	A	86 - 15	1	
	19-84101- 3	X1	86 - 31	1	
	19-84101- 3C	X1		1	
	19-84101- 5		86 - 31	1	
R82MDA-	19-84102- 3	P1	86 - 34	1	
	19-84102- 3C	X1		1	
	19-84103- 3	M1	86 - 40	1	
	19-84104- 3	M1	86 - 43	1	
	19-84105- 3	M1	86 - 42	1	
	19-87013- 3		39 - 9	1	
	19-87014- 3	M1	39 - 10	1	
	20-19054- 19			1	
	20-32064- 52			1	

STOCK	PART NUMBER	SOURCE CODE	FIGURE & INDEX NO.	QTY. PER A/C	MICROFILM INDEX
	20-32064- 54			2	
	20-32064-302			1	
	20-32064-304			1	
	20-33041- 59			1	
	20-33041- 61			1	
	20-54162- 3			1	
	20-91012- 3		132 - 49	1	
R83MDA-	20-91232- 3	P1	29 - 25	8	
	23-31059- 9		50 - 32	2	
	23-35078- 3	M1	45 - 51	2	
	23-35079- 1	M1	45 -	2	
	23-35079- 3	M1	45 - 52	2	
	23-35083- 3	M1	54 - 23	1	
	23-35083- 4	M1	54 - 24	1	
	23-60115- 5		74 - 42	2	
R82MDA-	23-62069- 1	P1	56 - 8	1	
	23-62069- 3	M1		1	
	23-62069- 5			1	
	23-62069-301			1	
	23-62070- 3	M1	56 - 6	2	
R82MDA-	23-62071- 3	P	56 - 15	1	
	23-62072-301		56 - 1	1	
	23-63088- 5	M1	150 - 22	1	
	23-63102- 3	M1	149 - 4	2	
	23-63106- 3	M1	149 - 7	2	
	23-63107- 3	M1	149 - 17	2	
	23-63108- 3		149 - 19	1	
	23-63120- 3	M1	149 - 13	1	
	23-63134- 3	P1	150 - 24	1	
	23-69052- 3F	X1		3	
R82MDA-	23-69076- 3	P	152 - 16	2	
R94MDA-	23-71182- 3		173 - 40	8	A-166
	23-72003	*	63 - 12	1	
	23-72004- 3	*	64 - 24	2	
	23-73328- 3			1	
	23-73328- 5			2	
	23-78082- 3	M1	96 - 10	2	
R82MDA-	23-80063- 1	P1	78 - 7	1	
	23-80063- 3	X1		1	
	23-80063- 3C	X1		1	
	23-81057- 3	M1		1	
	23-81078- 3	X1	79 - 11	5	
R82MDA-	23-81098- 1	P1	74 - 52	4	
			79 -		
R82MDA-	23-81099- 3	P1	74 - 13	1	
	23-84067- 3F	X1		1	
	23-84068- 3	M1	156 - 28	1	
R82MDA-	23-84069- 3	P1	156 - 30	1	
	23-84069- 3F	X1		1	
	23-84071- 3	M1	156 - 21	1	
	23-89097- 3	M1		1	
	25-00001	*	1 -	1	
	25-00014			1	
	25-11000- 1	*	14 -	1	D-406
	25-11000- 2	*	14 -	1	
R82MDA-	25-11001- 1	P1	14 - 4	1	
			15 -		
	25-11001- 2	P1	14 - 4	1	
			15 -		
	25-11001- 3	X1	15 -	1	
	25-11001- 4	X1	15 -	1	
	25-11001-301			1	
	25-11001-302			1	
	25-11001-303			1	
	25-11001-304			1	
	25-11002- 1	X1	15 - 2	1	D-408 D-409
			18 -		
	25-11002- 2	X1	15 - 2	1	
			18 -		
	25-11002- 3	M1		1	
	25-11002- 4	M1		1	
	25-11002- 5	M1		1	
	25-11002- 6	M1		1	
	25-11002- 7	M1		1	
	25-11002- 8	M1		1	
	25-11002- 9	M1		1	
	25-11002- 10	M1		1	
	25-11002- 11	M1		2	
	25-11002- 13	M1		1	
	25-11002- 14	M1		1	
	25-11002- 15	M1		1	
	25-11002- 16	M1		1	
	25-11002- 17	M1		1	
	25-11002- 18	M1		1	
	25-11002- 19	M1		1	
	25-11002- 20	M1		1	
	25-11002- 21	M1		1	
	25-11002- 22	M1		1	
	25-11002- 23	M1		1	
	25-11002- 24	M1		1	
	25-11002- 25	M1		1	
	25-11002- 26	M1		1	
	25-11002- 27	M1		1	
	25-11002- 28	M1		1	
	25-11002- 37	M1	18 - 64	1	
	25-11002- 38	M1	18 - 64	1	

STOCK	PART NUMBER	SOURCE CODE	FIGURE & INDEX NO.	QTY. PER A/C	MICROFILM INDEX
	25-11002- 39	M1	18 - 67	1	
	25-11002- 40	M1	18 - 67	1	
	25-11002- 41	M1		1	
	25-11002- 42	M1		1	
	25-11002- 43	M1		2	
	25-11002- 45	M1		2	
	25-11002- 47	M1		2	
	25-11002- 49	M1		2	
	25-11002- 53	M1		1	
	25-11002- 54	M1		1	
	25-11002- 57	M1		1	
	25-11002- 58	M1		1	
	25-11002- 59	M		4	
	25-11002- 69	M		2	
	25-11002- 71	M1		1	
	25-11002- 72	M1		1	
	25-11002- 73	M1		2	
	25-11002- 75	M1		1	
	25-11002- 76	M1		1	
	25-11002- 77	M1		1	
	25-11002- 78	M1		1	
	25-11002- 79	M1		2	
	25-11002- 83	M1		1	
	25-11002- 84	M1		1	
	25-11002- 87	M1		1	
	25-11002- 88	M1		1	
	25-11002- 89	M1		1	
	25-11002- 90	M1		1	
	25-11002- 91	M1		1	
	25-11002- 92	M1		1	
	25-11002- 93	M1		1	
	25-11002- 94	M1		1	
	25-11002- 95	M1		1	
	25-11002- 96	M1		1	
	25-11002- 97	M1		1	
	25-11002- 98	M1		1	
	25-11002- 99	M1	18 - 47	1	
	25-11002-100	M1	18 - 47	1	
	25-11002-101	M1	18 - 46	1	
	25-11002-102	M1	18 - 46	1	
	25-11002-103	M1		1	
	25-11002-104	M1		1	
	25-11002-105	M1		2	
	25-11002-107	M1		4	
	25-11002-109	M1		2	
	25-11002-111	M1		2	
	25-11002-113	M1		1	
	25-11002-114	M1		1	
	25-11002-115	M1		1	
	25-11002-116	M1		1	
	25-11002-117	M1		2	
	25-11002-119	M1		1	
	25-11002-120	M1		1	
	25-11002-121	M1		1	
	25-11002-122	M1		1	
	25-11002-123	M1		4	
	25-11002-125	M1	18 -122	2	
	25-11002-127	M1		2	
	25-11002-129	M1		2	
	25-11002-131	M1		4	
	25-11002-133	M1		4	
	25-11002-135	M1	18 - 48	1	
	25-11002-136	M1	18 - 48	1	
	25-11002-137	M1		1	
	25-11002-138	M1		1	
	25-11002-139	M1		1	
	25-11002-140	M1		1	
	25-11002-141	M1		1	
	25-11002-142	M1		1	
	25-11002-143	M1		2	
	25-11002-145	M1		1	
	25-11002-146	M1		1	
	25-11002-147	M1		4	
	25-11002-151	M1		1	
	25-11002-152	M1		1	
	25-11002-157	M1		2	
	25-11002-159	M1		2	
	25-11002-165	M1		1	
	25-11002-166	M1		1	
	25-11002-167	M1	18 - 48	1	
	25-11002-168	M1		1	
	25-11002-169			1	
	25-11002-171	M1		1	
	25-11002-173			2	
	25-11002-175			4	
	25-11002-603			2	
	25-11002-605			2	
	25-11002-607			18	
	25-11002-609			40	
	25-11002-611			2	
	25-11002-613			16	
	25-11002-615			8	
	25-11002-617			1	
	25-11002-619			2	
	25-11002-620			2	
	25-11004- 4	X1		1	

STOCK	PART NUMBER	SOURCE CODE	FIGURE & INDEX NO.	QTY. PER A/C	MICROFILM INDEX
	25-11004- 5			2	
	25-11004- 6			1	
	25-11005- 3	X1		2	
	25-11005- 4	X1		2	
	25-11005- 5			2	
	25-11005- 6			2	
	25-11006- 3	X1		1	D-414
	25-11006- 4	X1		1	
	25-11007- 3	X1		1	D-415
	25-11007- 4	X1		1	
	25-11008- 1		18 -	1	D-416
	25-11008- 2	X1	18 -	1	
	25-11008- 3	M1		4	
	25-11008- 4	M1		2	
	25-11008- 5	M1		2	
	25-11008- 6	M1		2	
	25-11008- 7	M1		2	
	25-11008- 8	M1		2	
	25-11008- 9	M1		4	
	25-11008- 11	M1		4	
	25-11008- 13	M1		2	
	25-11008- 14	M1		2	
	25-11008- 15	M1		1	
	25-11008- 16	M1		1	
	25-11008- 17	M1		2	
	25-11008- 18	M1		2	
	25-11008- 19			1	
	25-11008- 20			1	
	25-11008- 21			1	
	25-11008- 22			1	
	25-11008- 23			1	
	25-11008- 24			1	
	25-11008- 25			1	
	25-11008- 26			1	
	25-11008- 27	M1		2	
	25-11008- 28	M1		2	
	25-11008- 29	M1		3	
	25-11008- 30	M1		3	
	25-11008- 31	M1		3	
	25-11008- 32	M1		3	
	25-11008- 33	M1		3	
	25-11008- 34	M1		3	
	25-11008- 35	M1		3	
	25-11008- 36	M1		3	
	25-11008- 37	M1		3	
	25-11008- 38	M1		3	
	25-11008- 39	M1		4	
	25-11008- 41	M1		4	
	25-11008-301			1	
	25-11008-302			1	
	25-11009- 1		20 -	1	D-417
	25-11009- 2	X1	20 -	1	
	25-11009- 3	M1		4	
	25-11009- 7	M1		4	
	25-11009- 29	M1		4	
	25-11009- 31	M1		8	
	25-11009- 33	M1		3	
	25-11009- 34	M1		3	
	25-11009- 35	M1		4	
	25-11009- 36	M1		4	
	25-11009- 39			1	
	25-11009- 40			1	
	25-11009- 43			1	
	25-11009- 44			1	
	25-11009- 47			1	
	25-11009- 48			1	
	25-11009- 51	M1		2	
	25-11009- 52	M1		2	
	25-11009- 53			1	
	25-11009- 54	M1		1	
	25-11009- 55	M1		2	
	25-11009- 57	M1		2	
	25-11009- 59	M1		2	
	25-11009- 60	M1		2	
	25-11009- 61	M1		2	
	25-11009- 62	M1		2	
	25-11009- 63	M1		2	
	25-11009- 64	M1		2	
	25-11009- 65	M1		2	
	25-11009- 66	M1		2	
	25-11009- 67	M1		2	
	25-11009- 68	M1		2	
	25-11009- 69	M1		2	
	25-11009- 70	M1		2	
	25-11009- 71	M1		8	
	25-11009- 73	M1		3	
	25-11009- 74	M1		3	
	25-11009- 75	M1		3	
	25-11009- 76	M1		3	
	25-11009- 77	M1		3	
	25-11009- 78	M1		3	
	25-11009- 79	M1		3	
	25-11009- 80	M1		3	
	25-11009- 81	M1		2	
	25-11009- 82	M1		2	
	25-11009- 83			2	

STOCK	PART NUMBER	SOURCE CODE	FIGURE & INDEX NO.	QTY. PER A/C	MICROFILM INDEX
	25-11009- 84			2	
	25-11009- 85			1	
	25-11009- 86			1	
	25-11009- 87			1	
	25-11009- 88			1	
	25-11009-301			1	
	25-11009-302			1	
	25-11010- 1	X1	22 -	1	D-418
	25-11010- 2	X1	22 -	1	
	25-11010- 3	M1		1	
	25-11010- 4	M1		1	
	25-11010- 5	M1		2	
	25-11010- 7	M1		1	
	25-11010- 8	M1		1	
	25-11010- 9	M1		1	
	25-11010- 10	M1		1	
	25-11010- 13	M1		1	
	25-11010- 14	M1		1	
	25-11010- 15	M1		1	
	25-11010- 17	M1		1	
	25-11010- 18	M1		1	
	25-11010- 19	M1		1	
	25-11010- 20	M1		1	
	25-11010- 21	M1		1	
	25-11010- 22	M1		1	
	25-11010- 23	M1		1	
	25-11010- 24	M1		1	
	25-11010- 25	M1		1	
	25-11010- 26	M1		1	
	25-11010- 27	M1		1	
	25-11010- 28	M1		1	
	25-11010- 29	M1		1	
	25-11010- 30	M1		1	
	25-11010- 31	M1		2	
	25-11010- 33	M1		1	
	25-11010- 35	M1		1	
	25-11010- 39	M1		2	
	25-11010- 40	M1		2	
	25-11010- 41	M1		2	
	25-11010- 42	M1		2	
	25-11010- 43			1	
	25-11010- 44			1	
	25-11010- 45			2	
R82MDA-	25-11011- 3	P1	20 - 80	4	D-419
	25-11012- 3F	X1		2	D-420
	25-11012- 4F	X1		2	
	25-11013- 1	P1	20 - 72	1	D-421
	25-11013- 2	P1	20 - 72	1	
	25-11013- 5	X1		1	
	25-11013- 6	X1		1	
	25-11013- 7			1	
	25-11013- 8			1	
	25-11013-301			1	
	25-11013-302			1	
	25-11014- 1	X2	18 - 82	1	D-422
	25-11014- 2	X2	18 - 82	1	
	25-11014- 3	X1		1	
	25-11014- 4	X1		1	
	25-11014- 5			1	
	25-11014- 6			1	
	25-11014-301			1	
	25-11014-302			1	
	25-11015- 3		22 - 1	2	C-318
	25-11015- 4	M1	22 - 1	2	
	25-11016- 3	M1		2	C-319
	25-11016- 4	M1		2	
	25-11017- 3	M1	18 - 16 107 - 28	12	A-167
	25-11017- 5		107 - 28	4	
	25-11017- 7		107 - 28	4	
	25-11018- 3	M1	18 - 19	1	D-423
	25-11018- 4		18 - 19	1	
	25-11019- 3	M1	18 -	8	A-168
	25-11020- 3F	X1		2	D-424
	25-11020- 4F	X1		2	
	25-11021- 3F	X1		4	D-425
	25-11022- 1	M1	18 -	1	D-426
	25-11022- 2	M1	18 -	1	
	25-11022- 3	M1		1	
	25-11022- 4	M1		1	
	25-11022- 5	M1		1	
	25-11022- 6	M1		1	
	25-11022- 7	M1		2	
	25-11022- 8	M1		2	
	25-11022- 9	M1		1	
	25-11022- 10	M1		1	
	25-11022- 11	M1		2	
	25-11022- 12	M1		2	
	25-11022- 13	M1		1	
	25-11022- 14	M1		1	
	25-11022- 15	M1		2	
	25-11022- 16	M1		2	
	25-11022- 17	M1		1	
	25-11022- 18	M1		1	
	25-11022- 19	M1		2	
	25-11022- 20	M1		2	

STOCK	PART NUMBER	SOURCE CODE	FIGURE & INDEX NO.	QTY. PER A/C	MICROFILM INDEX
	25-11022- 21	M1		1	
	25-11022- 22	M1		1	
	25-11022- 23	M1		2	
	25-11022- 24	M1		2	
	25-11022- 25	M1		2	
	25-11022- 26	M1		2	
	25-11022- 27	M1		8	
	25-11022- 29	M1		2	
	25-11022- 30	M1		2	
	25-11022- 31	M1		2	
	25-11022- 32	M1		2	
	25-11022- 33	M1		2	
	25-11022- 34	M1		2	
	25-11022- 35	M1		1	
	25-11022- 36	M1		1	
	25-11022- 37	M1		2	
	25-11022- 38	M1		2	
	25-11022- 39	M1		4	
	25-11022- 41	M1		4	
	25-11022- 43	M1		4	
	25-11022- 45	M1		4	
	25-11022- 47	M1		2	
	25-11022- 48	M1		2	
	25-11022- 49	M1		2	
	25-11022- 50	M1		2	
	25-11022- 51	M1		2	
	25-11022- 52	M1		2	
	25-11022- 53	M1		2	
	25-11022- 54	M1		2	
	25-11022- 55	M1		2	
	25-11022- 56	M1		2	
	25-11022- 57	M1		2	
	25-11022- 58	M1		2	
	25-11022- 59	M1		2	
	25-11022- 60	M1		2	
	25-11022- 61	M1		2	
	25-11022- 62	M1		2	
	25-11022- 63	M1		2	
	25-11022- 64	M1		2	
	25-11022- 65	M1		2	
	25-11022- 66	M1		2	
	25-11022-301	M1	18 -	2	
	25-11022-302	M1	18 -	2	
	25-11022-603			1	
	25-11023- 3	X2	18 - 97	1	E-1
	25-11023- 4	X2	18 - 97	1	
	25-11024- 3	X2	18 - 98	1	E-2
	25-11024- 4	X2	18 - 98	1	
	25-11024- 5	X2	18 - 98	1	
	25-11024- 6	X2	18 - 98	1	
	25-11025- 3	X1	18 - 9	6	
	25-11025- 3F	X1		6	
R82MDA-	25-11026- 3	P1	18 - 84	2	E-3
R82MDA-	25-11026- 4	P1	18 - 84	2	
	25-11027- 1	X2	18 - 99	1	XA-146
	25-11027- 2	X2	18 - 99	1	
	25-11027- 3	M1		2	
	25-11027- 5	M1		2	
	25-11027- 7	M1		1	
	25-11027- 8	M1		1	
	25-11027- 9	M1		1	
	25-11027- 10	M1		1	
	25-11027- 11	M1		1	
	25-11027- 12	M1		1	
	25-11027- 13	M1		1	
	25-11027- 14	M1		1	
	25-11027- 15	M1		1	
	25-11027- 16	M1		1	
	25-11027- 17	M1		1	
	25-11027- 18	M1		1	
	25-11027- 19	M1		1	
	25-11027- 20	M1		1	
	25-11027- 21	M1		1	
	25-11027- 22	M1		1	
	25-11027- 23	M1		1	
	25-11027- 24	M1		1	
	25-11027- 25	M1		1	
	25-11027- 26	M1		1	
	25-11027- 27	M1		1	
	25-11027- 28	M1		1	
	25-11027- 29	M1		1	
	25-11027- 30	M1		1	
	25-11027- 31	M1		1	
	25-11027- 32	M1		1	
	25-11027- 37	M1		1	
	25-11027- 38	M1		1	
	25-11027- 41	M1		1	
	25-11027- 42	M1		1	
	25-11027- 43	M1		1	
	25-11027- 44	M1		1	
	25-11027- 45	M1		1	
	25-11027- 46	M1		1	
	25-11027- 47			1	
	25-11027- 48			1	
	25-11027- 49			1	
	25-11027- 50			1	

STOCK	PART NUMBER	SOURCE CODE	FIGURE & INDEX NO.	QTY. PER A/C	MICROFILM INDEX
	25-11028- 1	X2	18 -101	1	E-5
	25-11028- 2	X2	18 -101	1	
	25-11028- 3	M1		3	
	25-11028- 5	M1		3	
	25-11028- 7	M1		1	
	25-11028- 8	M1		1	
	25-11028- 13	M1		2	
	25-11028- 15			1	
	25-11028- 16	M1		1	
	25-11028- 17	M1		1	
	25-11028- 18	M1		1	
	25-11028- 19	M1		1	
	25-11028- 20	M1		1	
	25-11028- 23			2	
	25-11028- 25	M1		4	
	25-11028- 27			1	
	25-11028- 28			1	
	25-11028-301	X2	18 -101	1	
	25-11028-302	X2	18 -101	1	
	25-11028-603			4	
	25-11031- 1	X2	18 -	1	E-6
	25-11031- 2	X2	18 -	1	
	25-11031- 7	M1		6	
	25-11031- 9	M1		2	
	25-11031- 10	M1		2	
	25-11031- 13	M1		2	
	25-11031- 14	M1		2	
	25-11031- 15	M1		2	
	25-11031- 16	M1		2	
	25-11031- 17	M1		2	
	25-11031- 18	M1		2	
	25-11031- 19			1	
	25-11031- 20			1	
	25-11031- 21	M1		1	
	25-11031- 22	M1		1	
	25-11031- 23	M1		2	
	25-11031- 24	M1		2	
	25-11031- 25	M1	18 -	12	
	25-11031- 27	M1		3	
	25-11031- 28	M1		3	
	25-11031- 29	M1		2	
	25-11031- 30	M1		2	
	25-11031- 31	M1		2	
	25-11031- 32	M1		2	
	25-11031- 33			4	
	25-11031- 34			4	
	25-11031-301	X2	18 -	2	
	25-11031-302	X2	18 -	2	
	25-11034- 1	X2	18 - 95	1	E-7
	25-11034- 2	X2	18 - 95	1	
	25-11034- 3	*		1	
	25-11034- 4	*		1	
	25-11034- 5	M1		2	
	25-11034- 6	M1		2	
	25-11034- 7	M1		2	
	25-11034- 8	M1		2	
	25-11034- 9	*		1	
	25-11034- 10	*		1	
	25-11034- 11	M1		2	
	25-11034- 15	M1		1	
	25-11034- 16	M1		1	
	25-11034- 21	M1		2	
	25-11034- 22	M1		2	
	25-11034- 23	M1		2	
	25-11034- 24	M1		2	
	25-11034- 25		18 - 96	1	
	25-11034- 26		18 - 96	1	
	25-11034- 27	M1		2	
	25-11034- 28	M1		2	
	25-11034- 29	M1		3	
	25-11034- 30	M1		3	
	25-11034- 31	M1		4	
	25-11034- 33	M1		2	
	25-11034- 34	M1		2	
	25-11034- 35	M1	18 - 96	2	
	25-11034- 36	M1	18 - 96	2	
	25-11034- 37	M1		2	
	25-11034- 38	M1		2	
	25-11034-301	M1	18 - 95	1	
	25-11034-302	M1	18 - 95	1	
	25-11034-303			1	
	25-11034-304			1	
	25-11035- 1	M1		1	E-8
	25-11035- 3	M1		1	
	25-11035- 5	M1		1	
	25-11035- 9	M1		1	
	25-11035- 11	M1		1	
	25-11035- 13	M1		1	
	25-11035- 15	M1		1	
	25-11035- 17			1	
	25-11035- 19			1	
	25-11036- 1	P1	22 - 11	1	
	25-11036- 2	P1	22 - 11	1	
	25-11036- 3	X1		1	
	25-11036- 4	X1		1	
	25-11037- 1	P1	22 - 22	1	

STOCK	PART NUMBER	SOURCE CODE	FIGURE & INDEX NO.	QTY. PER A/C	MICROFILM INDEX
	25-11037- 2	P1	22 - 22	1	
	25-11037- 3	X1		1	
	25-11037- 4	X1		1	
	25-11038- 3	M1		1	E-9
	25-11038- 4	X1		1	
	25-11038- 5	M1	18 - 17	1	
	25-11038- 6	M1	18 - 17	1	
	25-11039- 1		18 - 18	2	E-10
	25-11039- 2	M1	18 - 18	2	
	25-11039- 5	M1		2	
	25-11039- 6	M1		2	
	25-11039- 7	M1		2	
	25-11039- 8	M1		2	
	25-11042- 3	M1		2	C-322
	25-11042- 4	M1		2	
	25-11043- 1	*	18 -	2	E-11
	25-11043- 2	*	18 -	2	
R82MDA-	25-11043- 3	P1	18 - 4	2	
R82MDA-	25-11043- 4		18 - 4	2	
	25-11043- 7	M1		2	
	25-11043- 8	M1		2	
	25-11043- 9	M1		4	
	25-11043- 11	M1		4	
	25-11043- 13	M1		2	
	25-11043- 14	M1		2	
	25-11043- 15	M1		4	
	25-11043- 17	X1		2	
	25-11043- 18	X1		2	
	25-11043- 19	X1		2	
	25-11043- 20	X1		2	
	25-11043- 21	X1		2	
	25-11043- 22	X1		2	
	25-11043- 23	X1		2	
	25-11043- 24	X1		2	
	25-11043- 25	X1		2	
	25-11043- 26	X1		2	
	25-11043- 27			2	
	25-11043- 28	X1		2	
	25-11043- 29	X1		2	
	25-11043- 30	X1		2	
	25-11044- 1	*	18 -	2	E-12
	25-11044- 2	*	18 -	2	
R82MDA-	25-11044- 3	P1	18 - 10	2	
R82MDA-	25-11044- 4	P1	18 - 10	2	
	25-11044- 7	X1		1	
	25-11044- 8			1	
	25-11044- 11	M1		2	
	25-11044- 12	M1		2	
	25-11044- 13	M1		2	
	25-11044- 14	M1		2	
	25-11044- 15			1	
	25-11044- 16			1	
	25-11044- 17	M1		4	
	25-11044- 19	M1		4	
	25-11044- 21	M1		4	
	25-11044- 23	M1		4	
	25-11044- 31	M1		2	
	25-11044- 32	M1		2	
	25-11044- 33	X1		3	
	25-11044- 34	X1		3	
	25-11044- 35	X1		2	
	25-11044- 36	M1		2	
	25-11044- 37	M1		3	
	25-11044- 38	M1		3	
	25-11044- 39	X1		1	
	25-11044- 40	X1		1	
	25-11044- 41	M1		1	
	25-11044- 42	M1		1	
	25-11044- 43	M1		1	
	25-11044- 44	M1		1	
	25-11044- 45	M1		1	
	25-11044- 46	M1		1	
	25-11044- 47	M1		1	
	25-11044- 48	M1		1	
	25-11044- 49	M1		1	
	25-11044- 50	M1		1	
	25-11044- 51	M1		1	
	25-11044- 52	M1		1	
	25-11044- 53			3	
	25-11044- 54			3	
	25-11044- 55			3	
	25-11044- 56			3	
	25-11044- 57			4	
	25-11044- 58			4	
	25-11044- 59			4	
	25-11044- 60			4	
	25-11044- 61			4	
	25-11044- 62			4	
	25-11044- 63			4	
	25-11044- 64			4	
	25-11044-603			3	
	25-11044-604			3	
	25-11045-3-4F	X1		4	E-13
R82MDA-	25-11046- 1	P1	18 - 87	2	E-14
R82MDA-	25-11046- 2	P1	18 - 87	2	
	25-11046- 3	X1		2	
	25-11046- 4	X1		2	
R82MDA-	25-11047- 1	P1	18 - 85	2	E-15
R82MDA-	25-11047- 2	P1	18 - 85	2	
	25-11047- 3	X1		2	
	25-11047- 4	X1		2	
	25-11048- 1		18 -	1	E-16
	25-11048- 2	X2	18 -	1	
	25-11048- 3			2	
	25-11048- 5	M1		2	
	25-11048- 6	M1		2	
	25-11048- 7			1	
	25-11048- 8			1	
	25-11048- 9	M1		2	
	25-11048- 10	M1		2	
	25-11048- 11			1	
	25-11048- 12	M1		1	
	25-11048- 15			1	
	25-11048- 16			1	
	25-11048- 19	M1		2	
	25-11048- 20	M1		2	
	25-11048- 21	M1		2	
	25-11048- 22	M1		2	
	25-11048- 23	M1		2	
	25-11048- 24	M1		2	
	25-11048- 25	M1		4	
	25-11048- 27	M1		4	
	25-11048- 33	M1		2	
	25-11048- 34	M1		2	
	25-11048- 35	M1		1	
	25-11048- 36	M1		1	
	25-11048- 37			1	
	25-11048- 38			1	
	25-11048- 39	M1		2	
	25-11048- 40	M1		2	
	25-11048- 41	M1		2	
	25-11048- 42	M1		2	
	25-11048- 51	M1		4	
	25-11048- 53	M1		3	
	25-11048- 54	M1		3	
	25-11048- 55	M1		3	
	25-11048- 56	M1		3	
	25-11048- 57			3	
	25-11048- 58			3	
	25-11048- 59			3	
	25-11048- 60			3	
	25-11048- 61	M1		2	
	25-11048- 62	M1		2	
	25-11048- 63			2	
	25-11048- 65			2	
	25-11048- 66			2	
	25-11048-303			2	
	25-11048-304			2	
	25-11049- 1	X2	18 -	1	XA-147
	25-11049- 2	X2	18 -	1	
	25-11049- 5	M1		4	
	25-11049- 7	M1		4	
	25-11049- 11	M1		2	
	25-11049- 12	M1		2	
	25-11049- 13	M1		2	
	25-11049- 14	M1		2	
	25-11049- 25	M1		2	
	25-11049- 26	M1		2	
	25-11049- 27	M1		2	
	25-11049- 29	M1		2	
	25-11049- 31	M1		2	
	25-11049- 32	M1		2	
	25-11049- 33	M1	18 - 90	6	
	25-11049- 39	M1		2	
	25-11049- 45	M1		1	
	25-11049- 46	M1		1	
	25-11049- 47	M1		2	
	25-11049- 48	M1		2	
	25-11049- 49	M1		2	
	25-11049- 50	M1		2	
	25-11049- 51	M1		2	
	25-11049- 52	M1		2	
	25-11049- 53	M1		4	
	25-11049- 55	M1		2	
	25-11049- 56	M1		2	
	25-11049- 57	M1		4	
	25-11049- 59	M1		4	
	25-11049- 61	M1		4	
	25-11049- 63	M1		4	
	25-11049- 65	M1		4	
	25-11049- 67	M1		1	
	25-11049- 68	M1		1	
	25-11049- 69	M1		1	
	25-11049- 70	M1		1	
	25-11049- 71			1	
	25-11049- 72			1	
	25-11049- 75	M1		3	
	25-11049- 76	M1		2	
	25-11049- 79	M1		2	
	25-11049- 80	M1		2	
	25-11049- 81	M1		1	
	25-11049- 82	M1		1	

STOCK	PART NUMBER	SOURCE CODE	FIGURE & INDEX NO.	QTY. PER A/C	MICROFILM INDEX
	25-11049- 83	M1		6	
	25-11049- 85	M1		1	
	25-11049- 86	M1		1	
	25-11049- 91	M1		2	
	25-11049- 92	M1		2	
	25-11049- 93	M1		4	
	25-11049- 89	M1		4	
	25-11049- 95	M1		2	
	25-11049- 96	M1		2	
	25-11049- 97	M1		2	
	25-11049- 98	M1		2	
	25-11049-101	M1		2	
	25-11049-102	M1		2	
	25-11049-103			2	
	25-11049-105			4	
	25-11049-107			4	
	25-11049-109			2	
	25-11049-111			1	
	25-11049-112			1	
	25-11049-301	X2	18 -	1	
	25-11049-302	X2	18 -	1	
	25-11049-303			1	
	25-11049-304			1	
R82MDA-	25-11051- 3	P1	18 -123	4	B-366
	25-11052- 3	X1		4	C-323
	25-11052- 5	X1		2	
	25-11052- 6	X1		2	
	25-11053- 3	M1		1	A-9
	25-11054- 3	M1		1	
	25-11054- 5	M1	18 - 79	4	
	25-11054- 5C	M1		4	
	25-11055- 1	X1	23 - 28	2	XA-54
	25-11055- 3			2	
	25-11055- 5	M1		2	
	25-11055- 7	M1		2	
	25-11056- 1	M1	18 - 11	1	E-18
	25-11056- 2	M1	18 - 11	1	
	25-11056- 3			1	
	25-11056- 4			1	
	25-11056- 5	M1		2	
	25-11056- 6	M1		2	
	25-11056- 7			1	
	25-11056- 8			1	
	25-11056- 9			1	
	25-11056- 10			1	
	25-11056- 13			1	
	25-11056- 14			1	
	25-11056- 15			1	
	25-11056- 16			1	
	25-11056- 17			1	
	25-11056- 18			1	
	25-11056- 19			1	
	25-11056- 20			1	
	25-11056- 21			1	
	25-11056- 22			1	
	25-11056- 23	M1		3	
	25-11056- 24	M1		3	
	25-11056- 25	M1		3	
	25-11056- 26	M1		3	
	25-11056- 29	M1		3	
	25-11056- 30	M1		3	
	25-11056- 31	M1		3	
	25-11056- 32	M1		3	
	25-11056- 33	M1		3	
	25-11056- 34	M1		3	
	25-11056- 35			1	
	25-11056- 36			1	
	25-11056- 37	M1		1	
	25-11056- 38	M1		1	
	25-11056- 39	M1		2	
	25-11056- 40	M1		2	
	25-11056- 41	M1		2	
	25-11056- 42	M1		2	
	25-11056- 43	M1		2	
	25-11056- 44	M1		2	
	25-11056- 45	M1		2	
	25-11056- 46	M1		2	
	25-11056- 47	M1		2	
	25-11056- 48	M1		2	
	25-11056- 49	M1		2	
	25-11056- 50	M1		2	
	25-11056- 51	M1		2	
	25-11056- 52	M1		2	
	25-11056- 53	M1		2	
	25-11056- 54	M1		2	
	25-11056- 55	M1		2	
	25-11056- 56	M1		2	
	25-11056- 57	M1		2	
	25-11056- 58	M1		2	
	25-11056- 59	M1		2	
	25-11056- 60	M1		2	
	25-11056- 61			1	
	25-11056- 62			1	
	25-11056-301			1	
	25-11056-302			1	
	25-11057- 1	P1	18 -	1	E-19 E-20
	25-11057- 2	P1	18 -	1	
	25-11057- 5	M1		1	
	25-11057- 6	M1		1	
	25-11057- 7	M1		1	
	25-11057- 8	M1		1	
	25-11057- 11	M1		2	
	25-11057- 12	M1		2	
	25-11057- 13	M		1	
	25-11057- 14	M		1	
	25-11057- 15	M1		1	
	25-11057- 16	M1		1	
	25-11057- 17	M1	18 - 41	2	
	25-11057- 19	M1		2	
	25-11057- 20	M1		2	
	25-11057- 27	M		1	
	25-11057- 28	M		1	
	25-11057- 29	M1		2	
	25-11057- 35	M1		4	
	25-11057- 37	M1		4	
	25-11057- 41	M1		4	
	25-11057- 45	M1		4	
	25-11057- 47	M1		2	
	25-11057- 48	M1		2	
	25-11057- 49	M1		2	
	25-11057- 50	M1		2	
	25-11057- 57	M1		4	
	25-11057- 59	P1	18 - 29	1	
	25-11057- 60	P1	18 - 29	1	
	25-11057- 61	M1		1	
	25-11057- 62	M1		1	
	25-11057- 63	M1		1	
	25-11057- 64	M1		1	
	25-11057- 65	M1		2	
	25-11057- 66	M1		1	
	25-11057- 67	M1		2	
	25-11057- 68	M1		2	
	25-11057- 69	M1		2	
	25-11057- 70	M1		2	
	25-11057- 71	M1		2	
	25-11057- 72	M1		2	
	25-11057- 73	M1		2	
	25-11057- 74	M1		2	
	25-11057- 77			1	
	25-11057- 78			1	
	25-11057- 79			1	
	25-11057- 80			1	
	25-11057- 81			1	
	25-11057- 82			1	
	25-11057- 83			1	
	25-11057- 84			1	
	25-11057- 85			1	
	25-11057- 86			1	
	25-11057-301			1	
	25-11057-302			1	
R82MDA-	25-11058- 1	P1	18 - 23	2	E-21
R82MDA-	25-11058- 2	P1	18 - 23	2	
	25-11058- 3	X1		2	
	25-11058- 4	X1		2	
	25-11058- 5	M1		2	
	25-11058- 6	M1		2	
	25-11058- 7	M1		2	
	25-11058- 8	M1		2	
	25-11058- 9	M1		2	
	25-11058- 10	M1		2	
	25-11058- 11	M1		2	
	25-11058- 12	M1		2	
	25-11058- 13	M1		2	
	25-11058- 14	M1		2	
	25-11058- 15	M1		2	
	25-11058- 16	M1		2	
	25-11058- 17	M1		2	
	25-11058- 18	M1		2	
	25-11058- 19	M1		2	
	25-11058- 20	M1		2	
	25-11058- 21	M1		2	
	25-11058- 22	M1		2	
	25-11058- 23	M1		2	
	25-11058- 24	M1		2	
	25-11058- 25	M1		2	
	25-11058- 26	M1		2	
	25-11058- 27	M1		2	
	25-11058- 28	M1		2	
	25-11058- 31	M1		2	
	25-11058- 32	M1		2	
	25-11058- 33	M1		2	
	25-11058- 34	M1		2	
	25-11058- 35	M1		2	
	25-11058- 36	M1		2	
	25-11058- 37	M1		2	
	25-11058- 38	M1		2	
	25-11058- 39	M1		2	
	25-11058- 40	M1		2	
	25-11058- 41	M1		2	
	25-11058- 42	M1		2	
	25-11058- 43	M1		2	
	25-11058- 44	M1		2	

STOCK	PART NUMBER	SOURCE CODE	FIGURE & INDEX NO.	QTY. PER A/C	MICROFILM INDEX
	25-11058- 45	M1		2	
	25-11058- 46	M1		2	
	25-11058- 47	M1		2	
	25-11058- 48	M1		2	
	25-11058- 49	M1		2	
	25-11058- 50	M1		2	
	25-11058- 51	M1		2	
	25-11058- 52	M1		2	
	25-11058- 53	M1		2	
	25-11058- 54	M1		2	
	25-11058- 55	M1		2	
	25-11058- 56	M1		2	
	25-11058- 57	M1		2	
	25-11058- 58	M1		2	
	25-11058- 59	M1		2	
	25-11058- 60	M1		2	
	25-11058- 61	M1		4	
	25-11059- 3	M1	18 - 79	8	
	25-11060- 3			1	
	25-11060- 4			1	
	25-11061- 3F	X1		2	E-22
	25-11061- 4F	X1		2	
	25-11062- 3	M1	18 -104	4	A-169
	25-11063- 1			1	
	25-11063- 2			1	
	25-11063- 3			1	
	25-11063- 4			1	
	25-11063- 5			4	
	25-11063- 7			2	
	25-11063- 9			4	
	25-11063- 11			1	
	25-11063- 12			1	
	25-11063- 13			2	
	25-11063- 14			1	
	25-11064- 1			1	
	25-11064- 2			1	
	25-11064- 3			1	
	25-11064- 4			1	
	25-11064- 5			1	
	25-11064- 6			1	
	25-11064- 7			1	
	25-11064- 8			1	
	25-11064- 9			1	
	25-11064- 10			1	
	25-11064- 11			1	
	25-11064- 12			1	
	25-11064- 13			2	
	25-11065- 1	P1	18 -111	1	E-23
	25-11065- 2	P1	18 -111	1	
	25-11065- 3F	X1		2	
	25-11065- 4F	X1		2	
	25-11065- 7	X1		1	
	25-11065- 8	X1		1	
	25-11065- 9	X1		1	
	25-11065- 10	X1		1	
	25-11065- 11			1	
	25-11065- 12			1	
	25-11065-301	P1	18 -111	1	
	25-11065-302	P1	18 -111	1	
	25-11065-303			1	
	25-11065-304			1	
	25-11066- 3	X2	18 -102	2	E-24
	25-11066- 4	X2	18 -102	2	
R82MDA-	25-11067- 1	P	18 - 20	2	XA-55
R82MDA-	25-11067- 3	P	18 - 21	2	
R82MDA-	25-11067- 5	P	18 - 22	2	
	25-11067- 7	M1		6	
	25-11067- 11	M1		6	
	25-11067- 13	M1		10	
	25-11067- 15	M1		12	
	25-11067- 17	M1		12	
	25-11067- 19			2	
R82MDA-	25-11067-301	P	18 - 20	4	
R82MDA-	25-11067-303	P	18 - 21	4	
	25-11067-305	P	18 - 22	2	
	25-11067-307			2	
	25-11068- 3			1	
	25-11069- 3			1	
	25-11069- 4			1	
	25-11069- 5			1	
	25-11069- 6			1	
	25-11069- 7			1	
	25-11069- 8			1	
	25-11069- 9			1	
	25-11069- 10			1	
	25-11069- 11			1	
	25-11069- 12			1	
	25-11069- 13			1	
	25-11069- 14			1	
	25-11069- 15			1	
	25-11069- 16			1	
	25-11069- 17			1	
	25-11069- 18			1	
	25-11069- 19			1	
	25-11069- 20			1	
	25-11069- 21			2	
	25-11069- 23			1	
	25-11069- 24			1	
	25-11069- 25			1	
	25-11069- 26			1	
	25-11069- 27			1	
	25-11069- 28			1	
	25-11069- 29			1	
	25-11069- 30			1	
	25-11069- 31			1	
	25-11069- 32			1	
	25-11069- 33			1	
	25-11069- 34			1	
	25-11069- 35			1	
	25-11069- 36			2	
	25-11069- 38			1	
	25-11069- 39			1	
	25-11069- 40			1	
	25-11069- 41			1	
	25-11069- 42			1	
	25-11069- 43			1	
	25-11069- 44			1	
	25-11069- 45			1	
	25-11069- 46			1	
	25-11069- 47			1	
	25-11069- 48			1	
	25-11069- 49			1	
	25-11069- 50			1	
	25-11069- 51			1	
	25-11069- 52			1	
	25-11069- 53			1	
	25-11069- 54			1	
	25-11069- 55			1	
	25-11069- 56			1	
	25-11069- 57			2	
	25-11069- 59			1	
	25-11069- 60			1	
	25-11069- 61			1	
	25-11069- 62			1	
	25-11070- 1	M1	18 -	2	D-302
	25-11070- 2	M1	18 -	2	
	25-11070- 3	M1		2	
	25-11070- 4	M1		2	
	25-11070- 9	M1	18 - 65	4	
	25-11070- 11	M1	18 - 66	4	
	25-11070- 13	M1		2	
	25-11070- 14	M1		2	
	25-11070- 15	M1		2	
	25-11070- 16	M1		2	
	25-11072- 1			1	
	25-11072- 2			1	
	25-11072- 3			1	
	25-11072- 4			1	
	25-11072- 5			1	
	25-11072- 6			1	
	25-11072- 7			1	
	25-11072- 8			1	
	25-11072- 9			1	
	25-11072- 10			1	
	25-11072- 11			1	
	25-11072- 12			1	
	25-11072- 15			4	
	25-11072- 17			2	
	25-11072- 19			2	
	25-11072-603			2	
	25-11073			1	E-25
	25-11073- 1	M1	18 - 94	1	
	25-11073- 2		18 - 94	1	
	25-11073- 3			1	
	25-11073- 4	*		1	
	25-11073- 5	M1		1	
	25-11073- 6	M1		1	
	25-11073- 7	M1		2	
	25-11073- 8	M1		2	
	25-11073- 9	M1		1	
	25-11073- 10	M1		2	
	25-11073- 13	M1		1	
	25-11073- 14	M1		1	
	25-11073- 15	M1		2	
	25-11073- 19			4	
	25-11073- 21			2	
	25-11073- 22			2	
	25-11073- 23			2	
	25-11073- 24			2	
	25-11073-301	M1	18 - 94	1	
	25-11073-302	M1	18 - 94	1	
	25-11073-303			2	
	25-11073-304			2	
	25-11074- 1	X1	18 - 2 22 -	1	E-26
	25-11074- 2	X1	18 - 2 22 -	1	
	25-11074- 3	M1		1	
	25-11074- 4	M1		1	
	25-11074- 5	M1		1	
	25-11074- 6	M1		1	
	25-11074- 7	M1		1	

STOCK	PART NUMBER	SOURCE CODE	FIGURE & INDEX NO.	QTY. PER A/C	MICROFILM INDEX
	25-11074- 8	M1		1	
	25-11074- 9	M1		1	
	25-11074- 10	M1		1	
	25-11074- 11	M1		2	
	25-11074- 13	M1		2	
	25-11074- 15	M1		2	
	25-11074- 19	M1		1	
	25-11074- 20	M1		1	
	25-11074- 21	M1		1	
	25-11074- 22	M1		1	
	25-11074- 25	M1		1	
	25-11074- 26	M1		1	
	25-11074- 27	M1		1	
	25-11074- 28	M1		1	
	25-11074- 29	M1		1	
	25-11074- 30	M1		1	
	25-11074- 31	M1		1	
	25-11074- 32	M1		1	
	25-11074- 33			1	
	25-11074- 34			1	
	25-11074- 35	M1		1	
	25-11074- 36			1	
	25-11074- 37			1	
	25-11074- 38			1	
	25-11074- 43	M1	22 - 8	2	
	25-11074- 45	M1		1	
	25-11074- 46	M1		1	
	25-11074- 47	M1		1	
	25-11074- 48	M1		1	
	25-11074- 49	M		2	
	25-11074- 51		22 - 32	2	
	25-11074- 53	M1		2	
	25-11074- 55	M1		1	
	25-11074- 56	M1		1	
	25-11074- 57	M1	22 - 19	1	
	25-11074- 58		22 - 19	1	
	25-11074- 59	M	22 - 21	2	
	25-11074- 61	M1		1	
	25-11074- 62	M1		1	
	25-11074- 63	M1		1	
	25-11074- 64	M1		1	
	25-11074- 65	M1		1	
	25-11074- 67	M		18	
	25-11074- 69	M1		1	
	25-11074- 70	M1		1	
	25-11074- 71	M1		2	
	25-11074- 73	M1		8	
	25-11074- 75	M1		2	
	25-11074- 77	M1		2	
	25-11074- 79	M1		2	
	25-11074- 81	M1		12	
	25-11074- 83	M1		2	
	25-11074- 85	M1		2	
	25-11074- 87	M1		2	
	25-11074- 88	M1		2	
	25-11074- 89	M1		1	
	25-11074- 90	M1		1	
	25-11074- 91	M1		2	
	25-11074- 92	M1		2	
	25-11074- 97	M1		1	
	25-11074- 98	M1		1	
	25-11074- 99	M1		1	
	25-11074-100	M1		1	
	25-11074-101	M1		1	
	25-11074-102	M1		1	
	25-11074-103	M1		1	
	25-11074-104	M1		1	
	25-11074-105	M1	22 - 10	2	
	25-11074-107	M1	22 - 9	2	
	25-11074-109	M1		2	
	25-11074-111	M1		2	
	25-11074-113	M1		1	
	25-11074-114	M1		1	
	25-11074-117	M1		20	
	25-11074-119			2	
	25-11074-121		22 - 33	1	
	25-11074-123			1	
	25-11074-125			1	
	25-11074-129			1	
	25-11074-133		22 - 6	1	
	25-11074-134		22 - 6	1	
	25-11074-135		22 - 6	1	
	25-11074-136		22 - 6	1	
	25-11074-301	X1	18 - 2 22 -	2	
	25-11074-302	X1	18 - 2 22 -	1	
	25-11074-605			1	
	25-11074-607			1	
	25-11074-609			1	
	25-11075- 3	M1		1	E-27
	25-11075- 4	M1		1	
	25-11075- 5	X1		1	
	25-11075- 6	X1		1	
	25-11075- 7	M1		1	
	25-11075- 8	M1		1	

STOCK	PART NUMBER	SOURCE CODE	FIGURE & INDEX NO.	QTY. PER A/C	MICROFILM INDEX
	25-11075- 9	X1		1	
	25-11075- 10	X1		1	
	25-11075- 11	X1		1	
	25-11075- 12	X1		1	
	25-11075- 13	M1		1	
	25-11075- 14	M1		1	
	25-11075- 15	M1		1	
	25-11075- 16	M1		1	
	25-11075- 17	M1		1	
	25-11075- 18	M1		1	
	25-11075- 19	M1		1	
	25-11075- 20	M1		1	
	25-11075- 21	M1		1	
	25-11075- 22	M1		1	
	25-11075- 23	M1		1	
	25-11075- 24	M1		1	
	25-11075- 25	M1		1	
	25-11075- 26	M1		1	
	25-11075- 27	M1		1	
	25-11075- 28	M1		1	
	25-11075- 29	M1		1	
	25-11075- 30	M1		1	
	25-11075- 31	M1		1	
	25-11075- 32	M1		1	
	25-11075- 33	M1		1	
	25-11075- 34	M1		1	
	25-11075- 35	M1		1	
	25-11075- 36	M1		1	
	25-11075- 37	M1		1	
	25-11075- 38	M1		1	
	25-11075- 39	M1		1	
	25-11075- 41	M1		1	
	25-11075- 43	M1		1	
	25-11075- 45	M1		1	
	25-11075- 46	M1		1	
	25-11076- 3			1	
	25-11076- 4			1	
	25-11076-186			2	
	25-11077- 1		20 -	1	XA-148
	25-11077- 2		20 -	1	
	25-11077- 3	M1		1	
	25-11077- 4	M1		1	
	25-11077- 13			1	
	25-11077- 14			1	
	25-11077- 15	M1		1	
	25-11077- 16	M1		1	
	25-11077- 19	M1		1	
	25-11077- 20	M1		1	
	25-11077- 23	M1		1	
	25-11077- 24	M1		1	
	25-11077- 25	M1		1	
	25-11077- 26	M1		1	
	25-11077- 29	M1		1	
	25-11077- 30	M1		1	
	25-11077- 31	M1		1	
	25-11077- 32	M1		1	
	25-11077- 33	M1		1	
	25-11077- 34	M1		1	
	25-11077- 35	M1		1	
	25-11077- 36	M1		1	
	25-11077- 37	M		2	
	25-11077- 39	M1		1	
	25-11077- 40	M1		1	
	25-11077- 41	M1		1	
	25-11077- 42	M1		1	
	25-11077- 43	M1		1	
	25-11077- 44	M1		1	
	25-11077- 47	M1		1	
	25-11077- 48	M1		1	
	25-11077- 51	M1		1	
	25-11077- 52	M1		1	
	25-11077- 53	M1		1	
	25-11077- 54	M1		1	
	25-11077- 55	M1		1	
	25-11077- 56	M1		1	
	25-11077- 57	M1		1	
	25-11077- 58	M1		1	
	25-11077- 59	M1		2	
	25-11077- 61	M1		2	
	25-11077- 63	M1		1	
	25-11077- 64	M1		1	
	25-11077- 65	M1		2	
	25-11077- 66	M1		2	
	25-11077- 69			2	
	25-11077- 70			2	
	25-11077- 75	M1		1	
	25-11077- 76	M1		1	
	25-11077- 77	M1		2	
	25-11077- 79	M1		2	
	25-11077- 80	M1		3	
	25-11077- 81	M1		2	
	25-11077- 82	M1		2	
	25-11077- 83	M1		2	
	25-11077- 84	M1		2	
	25-11077- 85	M1		2	
	25-11077- 86	M1		2	

STOCK	PART NUMBER	SOURCE CODE	FIGURE & INDEX NO.	QTY. PER A/C	MICROFILM INDEX
	25-11077- 87	M1		2	
	25-11077- 89	M1		2	
	25-11077- 90	M1		2	
	25-11078- 1	X1	18 - 1 20 -	1	XA-149 XA-150
	25-11078- 2	X1	18 - 1 20 -	1	
	25-11078- 7			1	
	25-11078- 8			1	
	25-11078- 9	M1	20 - 47	1	
	25-11078- 10	M1	20 - 47	1	
	25-11078- 15	M1		1	
	25-11078- 17	M1		1	
	25-11078- 19	M1		1	
	25-11078- 21	M1		1	
	25-11078- 23	M1		1	
	25-11078- 25	M1		1	
	25-11078- 27	M1		1	
	25-11078- 29	M1		1	
	25-11078- 31	M1		1	
	25-11078- 33	M1		1	
	25-11078- 35	M1		1	
	25-11078- 37	M1		1	
	25-11078- 39	M1		1	
	25-11078- 40	M1		1	
	25-11078- 41	M1		1	
	25-11078- 42	M1		1	
	25-11078- 43	M1		1	
	25-11078- 44	M1		1	
	25-11078- 45	M1		1	
	25-11078- 46	M1		1	
	25-11078- 47	M1		1	
	25-11078- 48	M1		1	
	25-11078- 49	M1		1	
	25-11078- 50	M1		1	
	25-11078- 51	M1		1	
	25-11078- 52	M1		1	
	25-11078- 53	M1		1	
	25-11078- 54	M1		1	
	25-11078- 55	M1		1	
	25-11078- 56	M1		1	
	25-11078- 57	M1		1	
	25-11078- 58	M1		1	
	25-11078- 59	M1		1	
	25-11078- 60	M1		1	
	25-11078- 61	M1		1	
	25-11078- 62	M1		1	
	25-11078- 63	M1		1	
	25-11078- 64	M1		1	
	25-11078- 65	M1		1	
	25-11078- 66	M1		1	
	25-11078- 67	M1		1	
	25-11078- 68	M1		1	
	25-11078- 69	M1		1	
	25-11078- 70	M1		1	
	25-11078- 71	M1		1	
	25-11078- 72	M1		1	
	25-11078- 73	M1		1	
	25-11078- 74	M1		1	
	25-11078- 75	M	20 - 2 20 - 4	3	
	25-11078- 77	M1		1	
	25-11078- 78	M1		1	
	25-11078- 79	M1		1	
	25-11078- 80	M1		1	
	25-11078- 81	M1		1	
	25-11078- 82	M1		1	
	25-11078- 83	M1		1	
	25-11078- 84	M1		1	
	25-11078- 85	M1		1	
	25-11078- 87	M1		1	
	25-11078- 89	M1		13	
	25-11078- 91		20 -	1	
	25-11078- 93	M1		1	
	25-11078- 95	M1		1	
	25-11078- 97	M1		1	
	25-11078- 99	M1		1	
	25-11078-1001	M1		1	
	25-11078-1002	M1		1	
	25-11078-1003	M1		1	
	25-11078-1004	M1		1	
	25-11078-1005	M1		1	
	25-11078-1006	M1		1	
	25-11078-1007	M1		1	
	25-11078-1009	M1		1	
	25-11078-1011			1	
	25-11078-1013			1	
	25-11078-1015		20 -	1	
	25-11078-111	M1		1	
	25-11078-115	M1		1	
	25-11078-116	M1		1	
	25-11078-119	M1		1	
	25-11078-120	M1		1	
	25-11078-121	M1		2	
	25-11078-123	M1		2	
	25-11078-125	M1		1	

STOCK	PART NUMBER	SOURCE CODE	FIGURE & INDEX NO.	QTY. PER A/C	MICROFILM INDEX
	25-11078-129	M1	20 - 53	1	
	25-11078-130		20 - 53	1	
	25-11078-133	M1		2	
	25-11078-135	M1	20 - 50	1	
	25-11078-136	M1	20 - 50	1	
	25-11078-137	M1	20 - 52	1	
	25-11078-138	M1	20 - 52	1	
	25-11078-139	M1	20 - 51	1	
	25-11078-140	M1	20 - 51	1	
	25-11078-141	M1		1	
	25-11078-142	M1		1	
	25-11078-143	M1		1	
	25-11078-144	M1		1	
	25-11078-145	M1		2	
	25-11078-147	M1		2	
	25-11078-148	M1		1	
	25-11078-149	M1		2	
	25-11078-151	M1		2	
	25-11078-153	M1		2	
	25-11078-154	M1		2	
	25-11078-155	M1		2	
	25-11078-156	M1		2	
	25-11078-159			1	
	25-11078-161			1	
	25-11078-165			1	
	25-11078-167	M1		2	
	25-11078-169	M1		2	
	25-11078-171	M1		2	
	25-11078-173	M1		2	
	25-11078-175	M1	20 - 3	2	
	25-11078-177			1	
	25-11078-179			1	
	25-11078-181			1	
	25-11078-185	M1		1	
	25-11078-186	M1		1	
	25-11078-187	M1		4	
	25-11078-189	M1		4	
	25-11078-191	M1		4	
	25-11078-193			1	
	25-11078-194			1	
	25-11078-195			1	
	25-11078-196			1	
	25-11078-197	M1		2	
	25-11078-198	M1		2	
	25-11078-199			1	
	25-11078-200			1	
	25-11078-201	M1		1	
	25-11078-202	M1		1	
	25-11078-205	M1	20 - 49	2	
	25-11078-206		20 - 49	2	
	25-11078-207	M1		2	
	25-11078-208	M1		2	
	25-11078-209	M1		2	
	25-11078-210	M1		2	
	25-11078-215		20 - 47	1	
	25-11078-216		20 - 47	1	
	25-11078-223	M1		1	
	25-11078-224	M1		1	
	25-11078-229	M1		1	
	25-11078-230	M1		1	
	25-11078-231	M1		1	
	25-11078-232	M1		1	
	25-11078-233	M1		1	
	25-11078-234	M1		1	
	25-11078-235	M1		1	
	25-11078-236	M1		1	
	25-11078-239	M1		1	
	25-11078-241	M1		1	
	25-11078-245	M1		1	
	25-11078-247	M1		1	
	25-11078-248	M1		1	
	25-11078-249	M1		1	
	25-11078-250	M1		1	
	25-11078-251	M1		1	
	25-11078-252	M1		1	
	25-11078-253	M1		1	
	25-11078-254	M1		1	
	25-11078-255	M1		1	
	25-11078-256	M1		1	
	25-11078-257	M1		1	
	25-11078-258	M1		1	
	25-11078-261	M1		1	
	25-11078-262	M1		1	
	25-11078-263	M1		1	
	25-11078-264	M1		1	
	25-11078-269	M1		3	
	25-11078-271	M1		3	
	25-11078-275	M1		2	
	25-11078-277	M1		2	
	25-11078-279	M1		2	
	25-11078-281	M1		2	
	25-11078-283	M1		2	
	25-11078-285	M1		3	
	25-11078-287	M1		3	
	25-11078-291	M1		2	
	25-11078-293	M1		2	

STOCK	PART NUMBER	SOURCE CODE	FIGURE & INDEX NO.	QTY. PER A/C	MICROFILM INDEX
	25-11078-295	M1		2	
	25-11078-297	M1		2	
	25-11078-299	M1		2	
	25-11078-301	X1	18 - 1	1	
			20 -		
	25-11078-302		18 - 1	1	
			20 -		
	25-11078-401	M1		2	
	25-11078-403	M1		2	
	25-11078-405	M1		2	
	25-11078-407	M1		2	
	25-11078-409	M1		2	
	25-11078-411	M1		2	
	25-11078-415	M1		1	
	25-11078-416	M1		1	
	25-11078-417	M1		1	
	25-11078-418	M1		1	
	25-11078-419	M1		2	
	25-11078-421	M1		3	
	25-11078-423	M1	20 - 48	1	
	25-11078-424	M1	20 - 48	1	
	25-11078-426	M1		1	
	25-11078-427	M1		2	
	25-11078-428	M1		2	
	25-11078-429	M1		2	
	25-11078-430	M1		2	
	25-11078-431	M1		1	
	25-11078-432	M1		1	
	25-11078-433	M1		2	
	25-11078-434	M1		2	
	25-11078-435	M1		2	
	25-11078-436			2	
	25-11078-437			1	
	25-11078-438	M1		1	
	25-11078-439	M1	20 - 29	1	
	25-11078-440	M1	20 - 29	1	
	25-11078-443	M1	20 - 5	1	
	25-11078-445	M1		2	
	25-11078-447	M1		3	
	25-11078-449	M1		2	
	25-11078-451			3	
	25-11078-453	M1		2	
	25-11078-455	M1		2	
	25-11078-459	M1		1	
	25-11078-460	M1		1	
	25-11078-465	M1		1	
	25-11078-467	M1		1	
	25-11078-469	M1		1	
	25-11078-471	M1		1	
	25-11078-473	M1		1	
	25-11078-475	M1		1	
	25-11078-477	M1		1	
	25-11078-479	M1		1	
	25-11078-481	M1		1	
	25-11078-483	M1		1	
	25-11078-485	M1		3	
	25-11078-486	M1		1	
	25-11078-487	M1	20 - 29	1	
	25-11078-488	M1	20 - 29	1	
	25-11078-489	M1	20 - 1	1	
	25-11078-491			2	
	25-11078-493			2	
	25-11078-495	M1		1	
	25-11078-496	M1		1	
	25-11078-497	M1		1	
	25-11078-498	M1		1	
	25-11078-499	M1		1	
	25-11078-923		20 - 1	1	
	25-11078-939	M1	20 - 5	1	
	25-11079- 3			1	
	25-11079- 4			1	
	25-11080- 1	A1	20 -	1	E-30
	25-11080- 2	A1	20 -	1	
	25-11080- 3	M1		1	
	25-11080- 4	M1		1	
	25-11080- 5	M1		8	
	25-11080- 7	M1		2	
	25-11080- 8	M1		2	
	25-11080- 9	M1		2	
	25-11080- 10	M1		2	
	25-11080- 11	M1		2	
	25-11080- 12	M1		2	
	25-11080- 13	M1		2	
	25-11080- 14	M1		2	
	25-11080- 17	M1		2	
	25-11080- 18	M1		4	
	25-11080- 19	M1		2	
	25-11080- 20	M1		2	
	25-11080- 21			1	
	25-11080- 22			1	
	25-11080-301			1	
	25-11080-302			1	
	25-11081- 1			1	
	25-11081- 2			1	
	25-11081- 3			1	
	25-11081- 4			1	

STOCK	PART NUMBER	SOURCE CODE	FIGURE & INDEX NO.	QTY. PER A/C	MICROFILM INDEX
	25-11082	*		2	B-369
	25-11083- 3	X1		10	C-324
	25-11083- 5	X1		4	
	25-11083- 7	X1		4	
	25-11085- 3	M1		1	C-325
	25-11085- 4	M1		1	
	25-11085- 5			1	
	25-11085- 6			1	
	25-11086- 1			2	
	25-11086- 3			4	
	25-11086- 3P			2	
	25-11087- 3F	X1		1	E-31
	25-11087- 4F	X1		1	
	25-11088- 1	P1	22 - 2	1	E-32
	25-11088- 2	P1	22 - 2	1	
	25-11088- 3	X1		1	
	25-11088- 4	X1		1	
	25-11090- 1	M1	18 - 3	1	XA-151 XA-152
			19 -		
	25-11090- 2	M1	18 - 3	1	
			19 -		
	25-11090- 3	M1		1	
	25-11090- 4	M1		1	
	25-11090- 5	M1		1	
	25-11090- 6	M1		1	
	25-11090- 9	M1		1	
	25-11090- 10	M1		1	
	25-11090- 15	M1		1	
	25-11090- 16	M1		1	
	25-11090- 23	M1		1	
	25-11090- 24	M1		1	
	25-11090- 25	M1		1	
	25-11090- 26	M1		1	
	25-11090- 27	M1		1	
	25-11090- 28	M1		1	
	25-11090- 31	M1		1	
	25-11090- 32	M1		1	
	25-11090- 35	M1		1	
	25-11090- 36	M1		1	
	25-11090- 39	M1		1	
	25-11090- 40	M1		1	
	25-11090- 43	M1		1	
	25-11090- 44	M1		1	
	25-11090- 45	M1		1	
	25-11090- 46	M1		1	
	25-11090- 51	M1		1	
	25-11090- 52	M1		1	
	25-11090- 53	M1		1	
	25-11090- 54	M1		1	
	25-11090- 55	M1		1	
	25-11090- 56	M1		1	
	25-11090- 61	M1		1	
	25-11090- 62	M1		1	
	25-11090- 63	M1		1	
	25-11090- 64	M1		1	
	25-11090- 67	M1		1	
	25-11090- 68	M1		1	
	25-11090- 69			1	
	25-11090- 70			1	
	25-11090- 71	M1		1	
	25-11090- 72	M1		1	
	25-11090- 73	M1		1	
	25-11090- 74	M1		1	
	25-11090- 77	M1		1	
	25-11090- 78	M1		2	
	25-11090- 83	M1		1	
	25-11090- 84	M1		1	
	25-11090- 85	M1		1	
	25-11090- 86	M1		1	
	25-11090- 91	M1		1	
	25-11090- 92	M1		1	
	25-11090- 93	M1		1	
	25-11090- 94	M1		1	
	25-11090- 95	M1		1	
	25-11090- 96	M1		1	
	25-11090- 97	M1		1	
	25-11090- 98	M1		1	
	25-11090-1001			1	
	25-11090-1002			1	
	25-11090-1003			1	
	25-11090-1004			1	
	25-11090-1005			1	
	25-11090-1006			1	
	25-11090-1007			1	
	25-11090-1008			1	
	25-11090-1009			1	
	25-11090-1011			1	
	25-11090-1013			1	
	25-11090-105	M1		2	
	25-11090-107	M1		1	
	25-11090-108	M1		1	
	25-11090-109	M1		1	
	25-11090-110	M1		1	
	25-11090-111	M1		1	
	25-11090-112	M1		1	
	25-11090-113	M1		1	

STOCK	PART NUMBER	SOURCE CODE	FIGURE & INDEX NO.	QTY. PER A/C	MICROFILM INDEX
	25-11090-114	M1		1	
	25-11090-115	M1		1	
	25-11090-116	M1		1	
	25-11090-119	M1		1	
	25-11090-120	M1		1	
	25-11090-121	M1		1	
	25-11090-122	M1		1	
	25-11090-123	M1		1	
	25-11090-124	M1		1	
	25-11090-125	M1		1	
	25-11090-126	M1		1	
	25-11090-129	M1		1	
	25-11090-130	M1		1	
	25-11090-131	M1		1	
	25-11090-132	M1		1	
	25-11090-133	M1		1	
	25-11090-134	M1		1	
	25-11090-135	M1		1	
	25-11090-136	M1		1	
	25-11090-137	M1		1	
	25-11090-138	M1		1	
	25-11090-141	M1		1	
	25-11090-142	M1		1	
	25-11090-147	M1		2	
	25-11090-149	M1		2	
	25-11090-153			1	
	25-11090-154			1	
	25-11090-155			1	
	25-11090-156			1	
	25-11090-157	M1		2	
	25-11090-159	M1		1	
	25-11090-160	M1		1	
	25-11090-161	M1		2	
	25-11090-163	M1		2	
	25-11090-165	M1	19 - 2	2	
	25-11090-167	M1	19 - 3	2	
	25-11090-169	M1	19 - 7	2	
	25-11090-171		19 - 6	2	
	25-11090-173	M1	19 - 4	2	
	25-11090-175	M1	19 - 1	2	
	25-11090-179	M1		2	
	25-11090-181	M1		2	
	25-11090-183	M1		1	
	25-11090-184	M1		1	
	25-11090-185	M1		1	
	25-11090-186			1	
	25-11090-187	M1		1	
	25-11090-188	M1		1	
	25-11090-191	M1		2	
	25-11090-199	M1		1	
	25-11090-200	M1		1	
	25-11090-201	M1		4	
	25-11090-203	M1	19 - 8	2	
	25-11090-205	M1	19 - 9	2	
	25-11090-207	M1	19 - 10	2	
	25-11090-209	M1		1	
	25-11090-210	M1		1	
	25-11090-211	M		2	
	25-11090-213	M1		1	
	25-11090-214	M1		1	
	25-11090-215	M1		2	
	25-11090-217	M1		2	
	25-11090-219	M1		2	
	25-11090-221	M1		2	
	25-11090-225	M1		1	
	25-11090-226	M1		1	
	25-11090-227	M1		2	
	25-11090-237	M1	19 - 37	1	
	25-11090-238	M1	19 - 37	1	
	25-11090-239	M1		1	
	25-11090-240	M1		1	
	25-11090-241	M1		1	
	25-11090-242	M1		1	
	25-11090-243	M1	19 - 33	1	
	25-11090-244	M1	19 - 33	1	
	25-11090-245	M1		2	
	25-11090-247	M1		2	
	25-11090-251	M1		2	
	25-11090-253	M1		1	
	25-11090-254	M1		1	
	25-11090-255	M1		1	
	25-11090-256	M1		1	
	25-11090-257			1	
	25-11090-258			1	
	25-11090-259	M1		1	
	25-11090-260	M1		1	
	25-11090-261			1	
	25-11090-262			1	
	25-11090-263	M1		1	
	25-11090-264	M1		1	
	25-11090-265	M1		1	
	25-11090-266	M1		1	
	25-11090-267	M1		1	
	25-11090-268	M1		1	
	25-11090-269	M1		1	
	25-11090-270	M1		1	
	25-11090-271	M1		1	
	25-11090-272	M1		1	
	25-11090-273	M1		1	
	25-11090-274	M1		1	
	25-11090-275	M1		1	
	25-11090-276	M1		1	
	25-11090-277	M1		1	
	25-11090-278	M1		1	
	25-11090-279	M1		1	
	25-11090-280	M1		1	
	25-11090-283	M1		1	
	25-11090-284	M1		1	
	25-11090-285	M1		1	
	25-11090-286	M1		1	
	25-11090-287	M1		1	
	25-11090-288	M1		1	
	25-11090-289	M1		1	
	25-11090-290	M1		1	
	25-11090-291	M1		1	
	25-11090-292	M1		1	
	25-11090-293	M1		1	
	25-11090-294	M1		1	
	25-11090-295	M1		1	
	25-11090-296	M1		1	
	25-11090-297	M1		1	
	25-11090-298	M1		1	
	25-11090-301		18 - 3 19 -	1	
	25-11090-302		18 - 3 19 -	1	
	25-11090-401	M1		2	
	25-11090-402	M1		2	
	25-11090-403	M1		1	
	25-11090-404	M1		1	
	25-11090-405	M1		2	
	25-11090-406	M1		2	
	25-11090-407	M1		2	
	25-11090-408	M1		2	
	25-11090-409			1	
	25-11090-410			1	
	25-11090-411	M1		2	
	25-11090-412	M1		2	
	25-11090-413	M1		2	
	25-11090-414	M1		2	
	25-11090-415	M1		1	
	25-11090-416	M1		1	
	25-11090-417			2	
	25-11090-426			1	
	25-11090-429			2	
	25-11090-433		19 - 7	2	
	25-11090-435		19 - 6	2	
	25-11090-437			2	
	25-11090-439		19 - 5	2	
	25-11090-441			1	
	25-11090-442			1	
	25-11090-443			1	
	25-11090-444			1	
	25-11090-451			1	
	25-11090-452			1	
	25-11090-453			2	
	25-11090-455			2	
	25-11090-456			2	
	25-11090-457			1	
	25-11090-458			1	
	25-11090-459			1	
	25-11090-460			1	
	25-11090-461			1	
	25-11090-462			1	
	25-11090-465			2	
	25-11090-466			2	
	25-11090-467			1	
	25-11090-468			1	
	25-11090-469			2	
	25-11090-471		19 - 11	2	
	25-11090-473			2	
	25-11090-475			1	
	25-11090-476			1	
	25-11090-477			2	
	25-11090-479			1	
	25-11090-480			1	
	25-11090-481			1	
	25-11090-482			1	
	25-11090-485			1	
	25-11090-486			1	
	25-11090-487			2	
	25-11090-489			1	
	25-11090-490			1	
	25-11090-491			1	
	25-11090-492			1	
	25-11090-493			1	
	25-11090-494			1	
	25-11090-495			2	
	25-11090-497			1	
	25-11090-498			1	
	25-11090-499			2	
	25-11090-603			1	

STOCK	PART NUMBER	SOURCE CODE	FIGURE & INDEX NO.	QTY. PER A/C	MICROFILM INDEX
	25-11090-605			1	
	25-11090-607			2	
	25-11090-608			2	
	25-11090-609			1	
	25-11090-610			1	
	25-11090-611			1	
	25-11090-612			1	
	25-11090-613			1	
	25-11090-614			1	
	25-11091- 1	M1	18 - 13	4	B-370
	25-11091- 3	M1		4	
	25-11091- 5	M1		4	
	25-11092- 3		18 - 68	2	E-35
	25-11092- 4	X2	18 - 68	2	
	25-11093- 3	X2	18 - 69	2	E-36
	25-11093- 4	X2	18 - 69	2	
R82MDA-	25-11094- 3	P1	18 -113	1	E-37
	25-11094- 3F	X1		1	
R82MDA-	25-11094- 4		18 -113	1	
	25-11094- 4F	X1		1	
R82MDA-	25-11095- 1	P1	18 - 89	4	E-38
	25-11095- 7	X1		4	
	25-11095-3-4F			4	
	25-11096- 3			3	
	25-11096- 4			3	
	25-11096- 5			1	
	25-11096- 6			1	
	25-11097- 3	M1	18 - 72	2	C-326
	25-11097- 4	M1	18 - 72	2	
R82MDA-	25-11098- 3	P1	2 - 8	4	A-170
	25-11099- 3	M1	18 -119	8	A-171
	25-11100- 3	M1	18 -120	4	A-172
	25-11100- 5	M1	4 - 38	4	
	25-11101- 3	X1		4	E-39
	25-11101- 5	X1		2	
	25-11101- 6	X1		2	
	25-11102- 3F	X1		2	E-40
	25-11102- 4F	X1		2	
R82MDA-	25-11103- 1	P1	20 - 27	2	C-327
R82MDA-	25-11103- 2	P1	20 - 27	2	
	25-11103- 3	X1		2	
	25-11103- 4	X1		4	
R82MDA-	25-11105- 1	P1	18 - 71	2	C-329
R82MDA-	25-11105- 2	P1	18 - 71	2	
	25-11105- 7	X1		2	
	25-11105- 8	X1		2	
	25-11106- 5F	X1		2	C-330
	25-11106- 6F	X1		2	
	25-11107- 3			3	
	25-11107- 4			3	
	25-11107- 5			1	
	25-11107- 6			1	
	25-11108- 1			1	
	25-11108- 2			1	
	25-11108- 3			2	
	25-11108- 5			2	
	25-11108- 7			2	
	25-11108- 9			1	
	25-11108- 10			1	
	25-11108- 11			1	
	25-11108- 12			1	
	25-11108- 15			2	
	25-11108- 17			1	
	25-11108- 18			1	
	25-11108- 19			1	
	25-11108- 20			1	
	25-11108- 21			1	
	25-11108- 22			1	
	25-11108- 23			1	
	25-11108- 24			1	
	25-11108- 25			2	
	25-11108- 27			1	
	25-11108- 28			1	
	25-11108- 29			1	
	25-11108- 30			1	
	25-11108-603			2	
	25-11109- 1	P1	20 - 16	1	C-331
	25-11109- 2	P1	20 - 16	1	
	25-11109- 3	X1		2	
	25-11109- 4	X1		1	
	25-11109- 5	X1		1	
	25-11109- 6	X1		1	
	25-11109- 7			1	
	25-11109- 8			1	
	25-11109-301	P1	20 - 16	1	
	25-11109-302	P1	20 - 16	1	
	25-11109-303			1	
	25-11109-304			1	
	25-11110- 3F	X1		7	C-332
	25-11111- 1	P1	20 - 36	1	C-333
	25-11111- 2	P1	20 - 36	1	
	25-11111- 3	X1		1	
	25-11111- 4	X1		1	
	25-11111- 5	X1		1	
	25-11111- 6	X1		1	
	25-11111- 7			1	
	25-11111- 8			1	
R82MDA-	25-11111-301	P1	20 - 36	1	
R82MDA-	25-11111-302	P1	20 - 36	1	
	25-11111-303			1	
	25-11111-304			1	
	25-11112- 3F	X1		3	C-334
	25-11112- 4F	X1		3	
R82MDA-	25-11113- 1	P1	20 - 61	2	C-335
R82MDA-	25-11113- 2	P1	20 - 61	2	
	25-11113- 3	X1		2	
	25-11113- 4	X1		2	
	25-11114- 3F	X1		4	C-336
	25-11115- 3	M1	18 - 15	4	A-10
	25-11116- 1	M1		1	E-41
	25-11116- 2	M1		1	
	25-11116- 3	M1		1	
	25-11116- 4	M1		1	
	25-11116- 5	M1		1	
	25-11116- 6	M1		1	
	25-11116- 7	M1		1	
	25-11116- 8	M1		1	
	25-11116- 9	M1		2	
	25-11116- 11	M1		1	
	25-11116- 12	M1		1	
	25-11116- 13	M1		1	
	25-11116- 14	M1		1	
	25-11117- 3	X2	18 - 86	2	
	25-11117- 4	X2	18 - 86	2	
	25-11118- 3	M1	18 - 88	2	E-43
	25-11118- 4	M1	18 - 88	2	
	25-11119- 1	M1	14 - 90	2	
	25-11119- 2	M1	14 - 90	2	
	25-11119- 3	M1		2	
	25-11119- 4	M1		2	
	25-11119- 5	M1	14 -	8	
	25-11119- 7	M1	14 -	60	
	25-11119- 9	M1	14 -	4	
R82MDA-	25-11120- 1		18 - 12	2	E-44
R82MDA-	25-11120- 2	P1	18 - 12	2	
	25-11120- 3	M1		2	
	25-11120- 4	M1		2	
	25-11120- 5	M1		2	
	25-11120- 6	M1		2	
	25-11120- 9	M1		2	
	25-11120- 10	M1		2	
	25-11120- 11	M1		2	
	25-11120- 12	M1		2	
	25-11120- 13	M1		2	
	25-11120- 14	M1		2	
	25-11120- 17	M1		2	
	25-11120- 18	M1		2	
	25-11120- 19	M1		2	
	25-11120- 20	M1		2	
	25-11120- 21	M1		2	
	25-11120- 22	M1		2	
	25-11120- 23	M1		3	
	25-11120- 24	M1		3	
	25-11120- 25	M1		2	
	25-11120- 26	M1		2	
	25-11120- 27	M1		2	
	25-11120- 28	M1		2	
	25-11121- 3		18 -115	4	A-173
	25-11121- 5	M1	4 - 35	2	
	25-11122- 3	M1	18 -114	8	A-174
R82MDA-	25-11123- 5	P1	2 - 9	6	B-371
	25-11124- 1			1	E-45
	25-11124- 2	M1		1	
	25-11124- 3	M1		1	
	25-11124- 4	M1		1	
	25-11124- 5	M1		1	
	25-11124- 6	M1		1	
	25-11124- 7			1	
	25-11124- 8			1	
	25-11125- 3			3	E-46
	25-11125- 4	M1		3	
	25-11126- 3			3	E-47
	25-11126- 4	M1		3	
	25-11127- 3			3	E-48
	25-11127- 4	M1		1	
	25-11127- 5			2	
	25-11127- 7			2	
	25-11127- 9			2	
	25-11127-301			4	
	25-11128- 1	M1		1	XA-153
	25-11128- 2	M1		1	
	25-11128- 3	M1		1	
	25-11128- 4	M1		1	
	25-11128- 5	M1		1	
	25-11128- 6	M1		1	
	25-11128- 7	M1		1	
	25-11128- 8	M1		1	
	25-11128- 9	M1		1	
	25-11128- 10	M1		1	
	25-11128- 11	M1		2	
	25-11128- 15	M1		2	
	25-11128- 16	M1		2	

STOCK	PART NUMBER	SOURCE CODE	FIGURE & INDEX NO.	QTY. PER A/C	MICROFILM INDEX
	25-11128- 17	M1		2	
	25-11128- 18	M1		2	
	25-11128-301	M1		1	
	25-11128-302	M1		1	
	25-11129- 3	M1		3	E-50
	25-11129- 4	M1		3	
	25-11130- 3	M1		3	E-51
	25-11130- 4	M1		3	
R82MDA-	25-11131- 3	P1	22 - 16	4	A-175
	25-11132- 3			2	C-337
	25-11132- 4	M1		2	
	25-11133- 3	P1	18 - 81	1	C-338
	25-11133- 4		18 - 81	1	
	25-11133- 5		18 - 81	2	
	25-11133- 6		18 - 81	2	
	25-11134- 3		14 - 99	2	A-176
	25-11134- 4	M1	14 - 99	2	
	25-11135- 3		14 -102	4	A-11
	25-11135- 5	M1	14 -101	4	
R82MDA-	25-11136- 1	M1	18 -109	2	B-372
	25-11136- 3	X1		2	
	25-11136- 5	X1		2	
	25-11137- 3			2	B-373
	25-11137- 4			2	
	25-11137- 5	M1	18 -105	2	
	25-11137- 6	M1	18 -105	2	
	25-11138- 3			4	
	25-11138- 4			4	
	25-11138- 5			4	
	25-11138- 6			4	
	25-11139- 3	M1		2	
	25-11139- 4	M1		2	
R82MDA-	25-11140- 3	P	20 - 18 20 - 40	6	A-177
R82MDA-	25-11140- 5	P	18 - 20 - 65	8	
R82MDA-	25-11140- 7	P	20 - 28 20 - 74	8	
	25-11141- 1	M1		1	E-52
	25-11141- 2	M1		1	
	25-11141- 3	M1		2	
	25-11141- 4	M1		2	
	25-11141- 5	M1		1	
	25-11141- 6	M1		1	
	25-11141- 7	M1		1	
	25-11141- 8	M1		1	
	25-11141- 9	M1		1	
	25-11141- 10	M1		1	
	25-11141- 11	M1		4	
	25-11141- 13	M1		2	
	25-11141- 14	M1		2	
	25-11141- 15	M1		1	
	25-11141- 16	M1		1	
	25-11141- 17	M1		2	
	25-11141- 19	M1		1	
	25-11141- 20	M1		1	
	25-11141- 21	M1		1	
	25-11141- 22	M1		1	
	25-11141- 23	M1		1	
	25-11141- 24	M1		1	
	25-11141- 25	M1		2	
	25-11141- 27	M1		2	
	25-11141- 29	M1		2	
	25-11141- 31	M1		2	
	25-11141- 33	M1		2	
	25-11141-301	M1		2	
	25-11141-302	M1		2	
	25-11143- 3	M1	18 - 42	1	E-53
	25-11143- 4	M1	18 - 42	1	
	25-11143- 5			1	
	25-11143- 6			1	
	25-11144- 1	M1	18 -121	2	B-374
	25-11144- 2	M1	18 -121	2	
	25-11144- 3	X1		2	
	25-11144- 4	X1		2	
	25-11144- 5	X1		4	
	25-11144- 7	X1		8	
	25-11144- 9	X1		4	
	25-11145- 1	M1	18 -116	4	B-375
	25-11145- 3	X1		4	
	25-11145- 5	X1		4	
	25-11146- 3	M1		1	D-304
	25-11146- 4	M1		1	
	25-11146- 5	M1		1	
	25-11146- 6	M1		1	
	25-11147- 3			1	
	25-11147- 3C			1	
	25-11147- 4			1	
	25-11147- 4C			1	
	25-11148- 3	M1		1	D-305
	25-11148- 4	M1		1	
	25-11148- 5	M1		1	
	25-11148- 6	M1		1	
	25-11148- 7	M1		1	
	25-11148- 8	M1		1	
	25-11148- 9	M1		1	

STOCK	PART NUMBER	SOURCE CODE	FIGURE & INDEX NO.	QTY. PER A/C	MICROFILM INDEX
	25-11148- 10	M1		1	
	25-11149- 1	M1	18 -	2	E-54 E-55
	25-11149- 2	M1	18 -	2	
	25-11149- 3	M1		2	
	25-11149- 4	M1		2	
	25-11149- 5	M1		2	
	25-11149- 6	M1		2	
	25-11149- 7	M1		2	
	25-11149- 8	M1		2	
	25-11149- 9	M1		1	
	25-11149- 10	M1		1	
	25-11149- 11	M1		4	
	25-11149- 13	M1		2	
	25-11149- 14	M1		2	
	25-11149- 15	M1		2	
	25-11149- 16	M1		2	
	25-11149- 17	M1		2	
	25-11149- 18	M1		2	
	25-11149- 19	M1		2	
	25-11149- 21	M1		2	
	25-11149- 22	M1		2	
	25-11149- 23	M1		2	
	25-11149- 24	M1		2	
	25-11149- 25	M1		2	
	25-11149- 26	M1		2	
	25-11149- 27	M1		2	
	25-11149- 28	M1		2	
	25-11149- 29	M1		4	
	25-11149- 31	M1		2	
	25-11149- 32	M1		2	
	25-11149- 33	M1		4	
	25-11149- 35	M1		2	
	25-11149- 36	M1		2	
	25-11149- 37	M1	15 - 24	2	
	25-11149- 38	M1	15 - 24	2	
	25-11149- 39	M1		2	
	25-11149- 40	M1		2	
	25-11149- 41	M1		2	
	25-11149- 42	M1		2	
	25-11149- 43	M1		2	
	25-11149- 44	M1		2	
	25-11149- 45	M1		2	
	25-11149- 46	M1		2	
	25-11149- 47	M1		2	
	25-11149- 48	M1		2	
	25-11149- 49	M1		2	
	25-11149- 50	M1		2	
	25-11149- 51	M1		2	
	25-11149- 52	M1		2	
	25-11149- 53	M1		2	
	25-11149- 54	M1		2	
	25-11149- 55	M1		2	
	25-11149- 56	M1		2	
	25-11149- 57	M1		2	
	25-11149- 58	M1		2	
	25-11149- 59	M1		4	
	25-11149- 61	M1		2	
	25-11149- 62	M1		2	
	25-11149- 63	M1		2	
	25-11149- 64	M1		2	
	25-11149- 65	M1		4	
	25-11149- 69	M1		2	
	25-11149- 70	M1		2	
	25-11149- 71	M1		2	
	25-11149- 72	M1		2	
	25-11149- 73	M1		4	
	25-11149- 75	M1		4	
	25-11149- 77	M1		4	
	25-11149- 79	M1		4	
	25-11149- 81	M1		4	
	25-11149- 83	M1		4	
	25-11149- 85	M1		2	
	25-11149- 86	M1		2	
	25-11149- 87	M1		2	
	25-11149- 88	M1		2	
	25-11149- 89		15 -	2	
	25-11149- 90		15 -	2	
	25-11150- 1	A1	20 -	2	XA-154 XA-155 XA-156
	25-11150- 2	A1	20 -	2	
	25-11150- 3	M1		1	
	25-11150- 4	M1		1	
	25-11150- 7	M1		1	
	25-11150- 9	M1	20 - 12	1	
	25-11150- 11	M1		1	
	25-11150- 13	M1		1	
	25-11150- 15	M1		1	
	25-11150- 17	M1		1	
	25-11150- 18	M1		1	
	25-11150- 19	M1		1	
	25-11150- 20	M1		1	
	25-11150- 21	M1		1	
	25-11150- 22	M1		1	
	25-11150- 23	M1		1	
	25-11150- 25	M1		1	
	25-11150- 27	M1		1	

STOCK	PART NUMBER	SOURCE CODE	FIGURE & INDEX NO.	QTY. PER A/C	MICROFILM INDEX
	25-11150- 29	M1		1	
	25-11150- 31	M1		1	
	25-11150- 35	M1		1	
	25-11150- 36	M1		1	
	25-11150- 37	M1		1	
	25-11150- 38	M1		1	
	25-11150- 39	M1		1	
	25-11150- 40	M1		1	
	25-11150- 41	M1		1	
	25-11150- 42	M1		1	
	25-11150- 43	M1		1	
	25-11150- 44	M1		1	
	25-11150- 45	M1		1	
	25-11150- 46	M1		1	
	25-11150- 47	M1		1	
	25-11150- 48	M1		1	
	25-11150- 49	M1		1	
	25-11150- 50	M1		1	
	25-11150- 53	M1		1	
	25-11150- 54	M1		1	
	25-11150- 59	M1		1	
	25-11150- 60	M1		1	
	25-11150- 61	M1		1	
	25-11150- 62	M1		1	
	25-11150- 63	M1		1	
	25-11150- 64	M1		1	
	25-11150- 67	M1		2	
	25-11150- 71	M1		1	
	25-11150- 72	M1		1	
	25-11150- 73	M1		2	
	25-11150- 75	M1		2	
	25-11150- 77	M1		1	
	25-11150- 78	M1		1	
	25-11150- 99	M1	20 - 12	1	
	25-11150-101		20 - 15	1	
	25-11150-102	M1	20 - 15	1	
	25-11150-103	M1	20 - 13	1	
	25-11150-104	M1	20 - 13	1	
	25-11150-105	M1	20 - 14	1	
	25-11150-106	M1	20 - 14	1	
	25-11150-107	M1		1	
	25-11150-108	M1		1	
	25-11150-109	M1		1	
	25-11150-110	M1		1	
	25-11150-111	M1		1	
	25-11150-113	M1		1	
	25-11150-117	M1		1	
	25-11150-118	M1		1	
	25-11150-121	M1		1	
	25-11150-122	M1		1	
	25-11150-123	M1		1	
	25-11150-124	M1		1	
	25-11150-125	M1		1	
	25-11150-126	M1		1	
	25-11150-127	M1		2	
	25-11150-129	M1		1	
	25-11150-131	M1		1	
	25-11150-147	M1		8	
	25-11150-151			1	
	25-11150-152			1	
	25-11150-161	M1		2	
	25-11150-163	M1		4	
	25-11150-165			2	
	25-11150-179	M1		1	
	25-11150-180	M1		1	
	25-11150-181	M1		1	
	25-11150-182	M1		1	
	25-11150-183	M1	20 -	2	
	25-11150-185	M1	20 -	2	
	25-11150-187	M1		1	
	25-11150-188	M1		1	
	25-11150-189	M1		1	
	25-11150-190	M1		1	
	25-11150-191	M1		4	
	25-11150-192	M1		2	
	25-11150-193	M1		1	
	25-11150-194	M1		1	
	25-11150-195	M1		3	
	25-11150-196	M1		3	
	25-11150-197	M1		2	
	25-11150-199	M1		1	
	25-11150-201	M1		1	
	25-11150-202	M1		1	
	25-11150-203	M1		1	
	25-11150-204	M1		1	
	25-11150-205	M1		1	
	25-11150-207	M1		2	
	25-11150-209	M1		2	
	25-11150-211	M1		4	
	25-11150-213	M1		2	
	25-11150-215	M1		1	
	25-11150-217	M1		1	
	25-11150-218	M1		1	
	25-11150-219	M1	20 - 11	1	
	25-11150-221	M1	20 - 11	1	
	25-11150-223	M1		1	

STOCK	PART NUMBER	SOURCE CODE	FIGURE & INDEX NO.	QTY. PER A/C	MICROFILM INDEX
	25-11150-225	M1		1	
	25-11150-229	M1		2	
	25-11150-231	M1		2	
	25-11150-233	M1		1	
	25-11150-235	M1		1	
	25-11150-237	M1		1	
	25-11150-239	M1		1	
	25-11150-240	M1		1	
	25-11150-241	M1		1	
	25-11150-242	M1		1	
	25-11150-243	M1		1	
	25-11150-245	M1		2	
	25-11150-246	M1		3	
	25-11150-247			1	
	25-11150-248			1	
	25-11150-249			1	
	25-11150-250			1	
	25-11150-251			1	
	25-11150-252			1	
	25-11150-253			1	
	25-11150-254			1	
	25-11150-603			1	
	25-11151- 1	A1	20 -	1	E-58 E-59
	25-11151- 2	A1	20 -	1	
	25-11151- 3			1	
	25-11151- 4			1	
	25-11151- 5			1	
	25-11151- 6			1	
	25-11151- 7	M1	20 - 31	1	
	25-11151- 8	M1	20 - 31	2	
	25-11151- 11	M1		1	
	25-11151- 12	M1		1	
	25-11151- 13			1	
	25-11151- 14			1	
	25-11151- 17	M1		1	
	25-11151- 18	M1		1	
	25-11151- 21	M1		1	
	25-11151- 22	M1		1	
	25-11151- 23	M1		2	
	25-11151- 25	M1		1	
	25-11151- 26	M1		1	
	25-11151- 27	M1		1	
	25-11151- 28	M1		1	
	25-11151- 29	M1		1	
	25-11151- 30	M1		1	
	25-11151- 31	M1		1	
	25-11151- 32	M1		1	
	25-11151- 33			1	
	25-11151- 34			1	
	25-11151- 35	M1		1	
	25-11151- 36	M1		1	
	25-11151- 37			1	
	25-11151- 38			1	
	25-11151- 39	M1		1	
	25-11151- 40	M1		1	
	25-11151- 41			1	
	25-11151- 42			1	
	25-11151- 43	M1		1	
	25-11151- 44	M1		1	
	25-11151- 45			1	
	25-11151- 46			1	
	25-11151- 47	M1		2	
	25-11151- 51	M1		1	
	25-11151- 52	M1		1	
	25-11151- 53	M1		1	
	25-11151- 54	M1		1	
	25-11151- 55	M1		1	
	25-11151- 56	M1		1	
	25-11151- 57	M1		1	
	25-11151- 58	M1		1	
	25-11151- 67			1	
	25-11151- 68			1	
	25-11151- 69	M1		2	
	25-11151- 71	*		1	
	25-11151- 72	*		1	
	25-11151- 73	M1		2	
	25-11151- 74	M1		2	
	25-11151- 77	M1		1	
	25-11151- 78	M1		1	
	25-11151- 79			1	
	25-11151- 80			1	
	25-11151- 81	M1	20 - 35	1	
	25-11151- 82	M1	20 - 35	1	
	25-11151- 83			1	
	25-11151- 84	M1		1	
	25-11151- 85	M1		1	
	25-11151- 86	M1		1	
	25-11151- 87	M1		1	
	25-11151- 88	M1		1	
	25-11151- 89	M1	20 - 34	2	
	25-11151- 91	M1	20 - 32	1	
	25-11151- 92	M1	20 - 32	1	
	25-11151- 93	M1	20 - 33	1	
	25-11151- 94	M1	20 - 33	1	
	25-11151- 95	M1		1	
	25-11151- 96	M1		1	

STOCK	PART NUMBER	SOURCE CODE	FIGURE & INDEX NO.	QTY. PER A/C	MICROFILM INDEX
	25-11151- 97	M1		1	
	25-11151- 98	M1		1	
	25-11151- 99	M1		1	
	25-11151-100	M1		1	
	25-11151-101	M1		1	
	25-11151-102	M1		1	
	25-11151-103	M1		2	
	25-11151-104	M1		2	
	25-11151-105	M1		2	
	25-11151-106	M1		2	
	25-11151-107	M1		1	
	25-11151-108	M1		1	
	25-11151-109	M1		1	
	25-11151-110	M1		1	
	25-11151-111	M1		1	
	25-11151-112	M1		1	
	25-11151-113			2	
	25-11151-114			2	
	25-11151-115	M1		2	
	25-11151-116	M1		2	
	25-11151-117			1	
	25-11151-118			1	
	25-11151-119	M1		2	
	25-11151-120	M1		2	
	25-11151-121			2	
	25-11151-122			2	
	25-11151-123	M1		1	
	25-11151-124	M1		1	
	25-11151-125	M1		12	
	25-11151-127	M1		6	
	25-11151-129	M1		2	
	25-11151-131			2	
	25-11151-132	M1		2	
	25-11151-133	M1		1	
	25-11151-134	M1		1	
	25-11151-135	M1		1	
	25-11151-136	M1		1	
	25-11151-137	M1		1	
	25-11151-138	M1		1	
	25-11151-139	M1		1	
	25-11151-140	M1		1	
	25-11151-141	M1		2	
	25-11151-142	M1		2	
	25-11151-143	M1		1	
	25-11151-144	M1		1	
	25-11151-145	M1		6	
	25-11151-147	M1		12	
	25-11151-149	M1	20 - 30	1	
	25-11151-150	M1	20 - 30	1	
	25-11151-151	M1	20 - 38	2	
	25-11151-153	M1	20 - 39	2	
	25-11151-155	M1		1	
	25-11151-156	M1		1	
	25-11151-157	M1		1	
	25-11151-158	M1		1	
	25-11151-159			2	
	25-11151-161			1	
	25-11151-162			1	
	25-11152- 1	M1		2	C-340
	25-11152- 2	M1		2	
	25-11152- 3			2	
	25-11152- 4	M1		2	
	25-11152- 5	M1		6	
	25-11152- 6	M1		6	
	25-11153- 1	M1		1	XA-157
	25-11153- 2	M1		1	
	25-11153- 3	M1		1	
	25-11153- 4	M1		1	
	25-11153- 5	M1		1	
	25-11153- 6	M1		1	
	25-11153- 7	M1		1	
	25-11153- 8	M1		1	
	25-11153- 9	M1		2	
	25-11153- 11	M1		2	
	25-11153- 12	M1		2	
	25-11153- 13	M1		2	
	25-11153- 14	M1		2	
	25-11153- 15	M1		1	
	25-11153- 16	M1		1	
	25-11153- 17	M1		1	
	25-11153- 18	M1		1	
	25-11153- 19	M1		1	
	25-11153- 20	M1		1	
	25-11153- 21	M1	22 - 30	2	
	25-11153-301	M1	22 -	1	
	25-11153-302	M1	22 -	1	
	25-11154- 1	M1		1	XA-158
	25-11154- 2	M1		1	
	25-11154- 3	M1		1	
	25-11154- 4	M1		1	
	25-11154- 5	M1		1	
	25-11154- 7	M1		1	
	25-11154- 9	M1		2	
	25-11154- 15	M1		1	
	25-11154- 16	M1		1	
	25-11154- 17	M1		1	
	25-11154- 18	M1		1	
	25-11154- 19	M1		2	
	25-11154- 21	M1		2	
	25-11154- 23	M1		1	
	25-11154- 24	M1		1	
	25-11154-301	M1		1	
	25-11154-302	M1		1	
	25-11155- 1	M1		1	XA-159
	25-11155- 2	M1		1	
	25-11155- 3	M1		2	
	25-11155- 4	M1		2	
	25-11155- 5	M1		1	
	25-11155- 6	M1		1	
	25-11155- 7	M1		1	
	25-11155- 8	M1		1	
	25-11155- 9	M1		2	
	25-11155- 10	M1		2	
	25-11155- 11	M1		3	
	25-11155- 12	M1		3	
	25-11155- 13	M1		1	
	25-11155- 14	M1		1	
	25-11155-301	M1		1	
	25-11155-302	M1		1	
	25-11156- 1	M1		1	E-63
	25-11156- 2	M1		1	
	25-11156- 3			1	
	25-11156- 4			1	
	25-11156- 5	M1		1	
	25-11156- 6	M1		1	
	25-11156- 7	M1		1	
	25-11156- 8	M1		1	
	25-11156- 9	M1		1	
	25-11156- 10	M1		1	
	25-11156- 11			1	
	25-11156- 12			1	
	25-11156- 15			2	
	25-11156- 17	M1		1	
	25-11156- 18	M1		1	
	25-11156- 19	M1		1	
	25-11156- 20	M1		1	
	25-11156- 21	M1		1	
	25-11156- 22	M1		1	
	25-11156- 23	M1		2	
	25-11156- 25	M1		1	
	25-11156- 26	M1		1	
	25-11156- 29			4	
	25-11159- 3F	X1		4	E-64
	25-11160- 3F	X1		4	E-65
R82MDA-	25-11162- 3	P1	22 - 28	4	
	25-11163- 1	M1		1	E-66
	25-11163- 2	M1		1	
	25-11163- 3	M1		1	
	25-11163- 4	M1		1	
	25-11163- 5	M1		1	
	25-11163- 6	M1		1	
	25-11163- 7	M1		1	
	25-11163- 8	M1		2	
	25-11163- 9	M1		1	
	25-11163- 10	M1		1	
	25-11163- 11	M1		1	
	25-11163- 12	M1		1	
	25-11163- 13	M1		1	
	25-11163- 14	M1		1	
	25-11163- 15	M1		1	
	25-11163- 16	M1		1	
	25-11163- 17	M1		1	
	25-11163- 18	M1		1	
	25-11163- 19	M1		2	
	25-11163- 23	M1		2	
	25-11163- 24	M1		2	
	25-11164- 1	X1		1	E-67
	25-11164- 2	X1		1	
	25-11164- 5	M1		1	
	25-11164- 6	M1		1	
	25-11164- 7	M1		1	
	25-11164- 8	M1		1	
	25-11165- 1			1	
	25-11165- 2			1	
	25-11166- 3	M1	20 - 25 20 - 59	2	C-341
	25-11166- 4	M1	20 - 25 20 - 59	2	
	25-11167- 3			1	E-68
	25-11167- 4			1	
	25-11167- 5	M1		1	
	25-11167- 6	M1		1	
	25-11168- 3			1	
	25-11168- 4			1	
	25-11168- 5	M1		2	
	25-11168- 6	M1		2	
	25-11169- 1			1	
	25-11169- 2			1	
	25-11169- 3			1	
	25-11169- 4			1	
	25-11169- 5			1	
	25-11169- 6			1	

STOCK	PART NUMBER	SOURCE CODE	FIGURE & INDEX NO.	QTY. PER A/C	MICROFILM INDEX
	25-11170- 1	M1		1	E-69
	25-11170- 2	M1		1	
	25-11170- 3	M1		2	
	25-11170- 4	M1		2	
	25-11170- 5	M1		1	
	25-11170- 6	M1		1	
	25-11170- 7	M1		1	
	25-11170- 8	M1		1	
	25-11170- 9	M1		1	
	25-11170- 10	M1		1	
	25-11170- 11	M1		2	
	25-11170- 12	M1		2	
	25-11170- 13	M1		2	
	25-11170- 14	M1		2	
	25-11170- 17	M1		2	
	25-11170- 18	M1		2	
	25-11170- 19	M1		2	
	25-11170- 20	M1		2	
	25-11170- 21	M1		2	
	25-11170- 22	M1		2	
	25-11170- 23	M1		2	
	25-11170- 24	M1		2	
	25-11170- 25	M1		2	
	25-11170- 26	M1		2	
	25-11170- 27	M1		2	
	25-11170- 28	M1		2	
	25-11170- 29	M1		2	
	25-11170- 30	M1		2	
	25-11170- 31	M1		2	
	25-11170- 32	M1		2	
	25-11170- 33	M1		2	
	25-11170- 34	M1		2	
	25-11170- 35	M1		2	
	25-11170- 36	M1		2	
	25-11170- 37	M1		2	
	25-11170- 38	M1		2	
	25-11170- 39			1	
	25-11170- 40			1	
	25-11170- 41			1	
	25-11170- 42			1	
	25-11170- 43			1	
	25-11170- 44			1	
	25-11170-301			1	
	25-11170-302			1	
	25-11171- 1	M1		1	E-70
	25-11171- 2	M1		1	
	25-11171- 3	M1		2	
	25-11171- 4	M1		2	
	25-11171- 5	M1		1	
	25-11171- 6	M1		1	
	25-11171- 7	M1		1	
	25-11171- 8	M1		1	
	25-11171- 9	M1		1	
	25-11171- 10	M1		1	
	25-11171- 11	M1		2	
	25-11171- 12	M1		2	
	25-11171- 13	M1		2	
	25-11171- 14	M1		2	
	25-11171- 15	M1		2	
	25-11171- 16	M1		2	
	25-11171- 17	M1		2	
	25-11171- 18	M1		2	
	25-11171- 19	M1		2	
	25-11171- 20	M1		2	
	25-11171- 21	M1		1	
	25-11171- 22	M1		1	
	25-11171- 23	M1		2	
	25-11171- 24	M1		2	
	25-11171- 25	M1		4	
	25-11171- 26	M1		4	
	25-11171- 27	M1		1	
	25-11171- 28	M1		1	
	25-11171- 29	M1		2	
	25-11171- 30	M1		2	
	25-11171- 31			1	
	25-11171- 32			1	
	25-11171- 33	M1		3	
	25-11171- 34	M1		3	
	25-11171- 35			1	
	25-11171- 36			1	
	25-11171- 37			1	
	25-11171- 38			1	
	25-11171- 39			1	
	25-11171- 40			1	
	25-11171-301			1	
	25-11171-302			1	
	25-11171-601			1	
	25-11171-602			1	
	25-11171-603			1	
	25-11171-604			1	
	25-11172- 1	M1	18 -	1	E-71
	25-11172- 2	M1	18 -	1	
	25-11172- 3	M1		1	
	25-11172- 4	M1		1	
	25-11172- 5	M1		2	
	25-11172- 6	M1		2	

STOCK	PART NUMBER	SOURCE CODE	FIGURE & INDEX NO.	QTY. PER A/C	MICROFILM INDEX
	25-11172- 7	M1		1	
	25-11172- 8	M1		1	
	25-11172- 9	M1		2	
	25-11172- 10	M1		2	
	25-11172- 11	M1		4	
	25-11172- 13	M1		4	
	25-11172- 15	M1		2	
	25-11172- 16	M1		2	
	25-11172- 17	M1		1	
	25-11172- 18	M1		1	
	25-11172- 19	M1		2	
	25-11172- 20	M1		2	
	25-11172- 21	M1		2	
	25-11172- 22	M1		2	
	25-11172- 23	M1		1	
	25-11172- 24	M1		1	
	25-11172- 25	M1		2	
	25-11172- 26	M1		2	
	25-11172- 27			1	
	25-11172- 28			1	
	25-11172- 29			1	
	25-11172- 30			1	
	25-11172- 33	M1		2	
	25-11172- 34	M1		2	
	25-11172- 37	M1		2	
	25-11172- 38	M1		2	
	25-11172- 39	M1		2	
	25-11172- 40	M1		2	
	25-11172- 41	M1		1	
	25-11172- 42	M1		1	
	25-11172- 45			4	
	25-11172- 46			1	
	25-11172- 47			1	
	25-11172- 48			1	
	25-11172- 49			2	
	25-11172- 50			2	
	25-11172- 55			2	
	25-11172- 56			2	
	25-11172- 57			2	
	25-11172- 58			2	
	25-11172- 59			1	
	25-11172- 60			1	
	25-11172- 61			1	
	25-11172- 62			1	
	25-11172- 63			1	
	25-11172- 64			1	
	25-11172- 65			1	
	25-11172- 66			1	
	25-11172- 67			2	
	25-11172-301			1	
	25-11172-302			1	
	25-11173- 1	M1		1	E-72
	25-11173- 3	M1		1	
	25-11173- 5	M1		1	
	25-11173- 7	M1		1	
	25-11174- 1	M1	20 - 6	1	C-342
	25-11174- 3	M1		1	
	25-11174- 5	M1		1	
	25-11174- 7	M	20 - 9	1	
	25-11174- 9	M	20 - 10	1	
	25-11175- 3F			1	
	25-11175- 4F			1	
	25-11176- 1			1	
	25-11176- 2			1	
	25-11178- 3	M1	14 -103	4	A-180
	25-11179- 3	M1	14 -105	12	A-181
	25-11180- 3	M1	14 - 64	4	B-376
R82MDA-	25-11181- 1	P1	18 - 73	2	C-344
R82MDA-	25-11181- 2	P1	18 - 73	2	
	25-11181- 3	X1		2	
	25-11181- 4	X1		2	
	25-11181- 5	M1		2	
	25-11181- 6	M1		2	
	25-11182- 3	M1	18 -103	4	A-182
	25-11183- 1	M1		2	E-73
	25-11183- 2	M1		2	
	25-11183- 3	M1		2	
	25-11183- 4	M1		2	
	25-11183- 5	M1		2	
	25-11183- 6	M1		2	
	25-11183- 7	M1		2	
	25-11183- 8	M1		2	
	25-11183- 9	M1		2	
	25-11183- 10	M1		2	
	25-11183- 11	M1		2	
	25-11183- 12	M1		2	
	25-11183- 13	M1		4	
	25-11183- 15	M1		4	
	25-11183- 17	M1		2	
	25-11183- 18	M1		2	
	25-11184- 1	M1		1	XA-160 XA-161
	25-11184- 2	M1		1	
	25-11184- 3	M1		1	
	25-11184- 4	M1		1	
	25-11184- 5	M1		1	
	25-11184- 6	M1		1	

STOCK	PART NUMBER	SOURCE CODE	FIGURE & INDEX NO.	QTY. PER A/C	MICROFILM INDEX
	25-11184- 7	M1		1	
	25-11184- 8	M1		1	
	25-11184- 9	M1		4	
	25-11184- 11	M1		2	
	25-11184- 12	M1		2	
	25-11184- 13	M1		2	
	25-11184- 14	M1		2	
	25-11184- 15	M1		2	
	25-11184- 16	M1		2	
	25-11184-301	M1		2	
	25-11184-302	M1		2	
	25-11185- 1		107 -	1	E-75 E-76
	25-11185- 2	M1	107 -	1	
	25-11185- 3	M1		1	
	25-11185- 4	M1		1	
	25-11185- 5	M1		1	
	25-11185- 6	M1		1	
	25-11185- 7	M1		1	
	25-11185- 8	M1		1	
	25-11186- 1	M1		1	C-345
	25-11186- 2	M1		1	
	25-11186- 5	M1		1	
	25-11186- 6	M1		1	
	25-11187- 1	M1		1	E-77
	25-11188- 1	M1		1	E-78
	25-11188- 2	M1		1	
	25-11188- 3	M1		1	
	25-11188- 4	M1		1	
	25-11188- 5	M1		1	
	25-11188- 6	M1		1	
	25-11188- 7	M1		2	
	25-11188- 9	M1		2	
	25-11188- 10	M1		2	
	25-11188-301	M1		2	
	25-11188-302	M1		2	
	25-11189- 3	M1		2	A-13
	25-11190- 3	M1		2	A-14
	25-11190- 5	M1		4	
	25-11191- 3			2	A-15
	25-11191- 5	M1		8	
	25-11192- 3	M1	20 - 58	1	A-183
	25-11192- 4	M1	20 - 58	1	
	25-11192- 5	M1	20 - 24	1	
	25-11192- 6	M1	20 - 24	1	
	25-11192- 7	M1		1	
	25-11192- 8	M1		1	
	25-11192- 9	M1		1	
	25-11192- 10	M1		1	
	25-11193- 3		20 - 23	1	B-377
	25-11193- 4	M1	20 - 23	1	
	25-11193- 5	M1		1	
	25-11193- 6	M1		1	
	25-11194- 3	M1	20 - 57	1	A-184
	25-11194- 4	M1	20 - 57	1	
	25-11194- 5	M1		1	
	25-11194- 6	M1		1	
	25-11195- 3	M1	5 - 23	8	A-16
			20 - 68		
	25-11195- 5	M1	5 - 22	8	
			20 - 67		
	25-11196- 3	M1	5 - 21	8	A-17
			20 - 70		
	25-11196- 5	M1	5 - 20	8	
			20 - 69		
	25-11197- 3	M1	34 - 25	1	A-185
R82MDA-	25-11198- 3	P1	18 - 54	4	B-378
	25-11198- 3F	X1		4	
	25-11199- 1	M1	18 - 51	4	C-346
	25-11199- 3	M1		4	
	25-11199- 5	M1		4	
	25-11199- 7	M1	18 -	4	
	25-11199- 9	M1	18 - 52	4	
	25-11200- 1	M1	18 -	1	E-79
	25-11200- 2	M1	18 -	1	
	25-11200- 3	M1		4	
	25-11200- 5	M1		2	
	25-11200- 6	M1		2	
	25-11200- 7	M1		2	
	25-11200- 8	M1		2	
	25-11200- 11	M1		2	
	25-11200- 12	M1		3	
	25-11200- 13	M1		2	
	25-11200- 14	M1		2	
	25-11200- 15	M1		2	
	25-11200- 16	M1		2	
	25-11200- 17	M1		2	
	25-11200- 18	M1		2	
	25-11200- 19	M1		4	
	25-11200- 21	M1		2	
	25-11200- 22	M1		2	
	25-11200- 23	M1		2	
	25-11200- 24	M1		2	
	25-11200- 25	M1		2	
	25-11200- 26	M1		2	
	25-11200- 27	M1		2	
	25-11200- 28	M1		2	

STOCK	PART NUMBER	SOURCE CODE	FIGURE & INDEX NO.	QTY. PER A/C	MICROFILM INDEX
	25-11200- 29	M1		1	
	25-11200- 30	M1		2	
	25-11200- 33			1	
	25-11200- 34			1	
	25-11200- 35			1	
	25-11200- 36			1	
	25-11200- 37			2	
	25-11200- 39			2	
	25-11200- 41		18 - 61	AR	
	25-11200- 43		18 - 59	2	
	25-11200- 47		18 - 62	1	
	25-11200- 48		18 - 62	1	
	25-11200- 49			2	
	25-11200- 50			2	
	25-11200- 51			2	
	25-11200- 52			2	
	25-11200-301		18 -		
	25-11200-302		18 -		
	25-11200-603			4	
	25-11201- 3	M1	18 - 58	2	A-18
	25-11202- 3	M1	18 - 57	1	B-379
	25-11202- 4	M1	18 - 57	1	
	25-11203- 1			1	
	25-11203- 2			1	
	25-11204- 3	M1	18 - 56	4	A-19
	25-11205- 3	M1		4	A-20
	25-11206- 5	M1	14 - 58	4	XA-13
			14 - 97		
	25-11206- 7	M1	14 - 59	4	
			14 - 96		
	25-11206- 9	M1	14 - 60	4	
			14 - 95		
	25-11206- 11	M1	14 - 61	4	
			14 - 94		
	25-11213- 3	M1		2	XA-4
	25-11217- 1			1	
	25-11217- 2			1	
	25-11217- 3			1	
	25-11217- 4			1	
	25-11217- 5			2	
	25-11217- 7			1	
	25-11217- 8			1	
	25-11217- 9			4	
	25-11217- 11			2	
	25-11218- 1			1	
	25-11218- 2			1	
	25-11218- 3			1	
	25-11218- 4			1	
	25-11218- 5			1	
	25-11218- 6			1	
	25-11220- 1			1	
	25-11220- 2			1	
	25-11220- 3			1	
	25-11220- 4			1	
	25-11220- 5			2	
	25-11220- 7			2	
	25-11220- 9			1	
	25-11220- 10			1	
	25-11220- 11			1	
	25-11220- 12			1	
	25-11221- 1			1	
	25-11221- 2			1	
	25-11221- 3			1	
	25-11221- 4			1	
	25-11221- 5			2	
	25-11221- 7			2	
	25-11223- 1			1	
	25-11223- 2			1	
	25-11223- 3			1	
	25-11223- 4			1	
	25-11223- 5			1	
	25-11223- 6			1	
	25-11224- 1			1	
	25-11224- 3			1	
	25-11224- 5			1	
	25-11224- 7			1	
	25-11224- 9			1	
	25-11224- 11			1	
	25-11225- 3	M1		2	XA-14
	25-11226- 3	M1		4	XA-15
	25-11227- 3	M1		2	
	25-11227- 4	M1		2	
	25-11228- 3			1	
	25-11228- 5			1	
	25-11228- 6			1	
	25-11228- 7			1	
	25-11228- 8			1	
	25-11228- 9			1	
	25-11228- 10			1	
	25-11228- 11			1	
	25-11228- 12			1	
	25-11228- 13			1	
	25-11228- 14			1	
	25-11228- 15			1	
	25-11228- 16			1	
	25-11228- 17			1	

STOCK	PART NUMBER	SOURCE CODE	FIGURE & INDEX NO.	QTY. PER A/C	MICROFILM INDEX
	25-11228- 19			1	
	25-11228- 20			1	
	25-11228- 21			1	
	25-11228- 22			1	
	25-11228- 23			1	
	25-11228- 24			1	
	25-11228- 25			1	
	25-11228- 26			1	
	25-11228- 27			1	
	25-11228- 28			1	
	25-11228- 29			1	
	25-11228- 30			1	
	25-11228- 31			1	
	25-11228- 33			1	
	25-11228- 34			1	
	25-11228- 35			1	
	25-11228- 36			1	
	25-11228- 37			1	
	25-11228- 38			1	
	25-11228- 39			7	
	25-11228- 40			6	
	25-11228- 41			3	
	25-11228- 42			3	
	25-11229- 1			1	
	25-11229- 2			1	
	25-11229- 3			1	
	25-11229- 5			1	
	25-11229- 7			1	
	25-11229- 9			1	
	25-11229- 11			1	
	25-11229- 12			1	
	25-11229- 13			1	
	25-11229- 14			1	
	25-11229- 15			1	
	25-11229- 16			1	
	25-11229- 17			1	
	25-11229- 18			1	
	25-11229- 19			2	
	25-11229- 21			1	
	25-11229- 22			1	
	25-11229- 23			1	
	25-11229- 24			1	
	25-11229- 25			1	
	25-11229- 27			1	
	25-11229- 29			1	
	25-11229- 30			1	
	25-11229- 31			1	
	25-11229- 33			1	
	25-11229- 35			1	
	25-11229- 37			1	
	25-11229- 39			1	
	25-11229- 40			1	
	25-11229- 41			1	
	25-11229- 42			1	
	25-11229- 43			1	
	25-11229- 44			1	
	25-11229- 45			2	
	25-11229- 47			1	
	25-11229- 49			1	
	25-11229- 51			1	
	25-11229- 53			4	
	25-11229- 55			4	
	25-11229- 57			1	
	25-11229- 58			1	
	25-11229- 59			2	
	25-11229- 60			1	
	25-11229- 61			1	
	25-11229- 63			1	
	25-11229- 65			1	
	25-11229- 67			1	
	25-11229- 69			1	
	25-11229- 70			1	
	25-11229- 71			1	
	25-11229- 73			2	
	25-11229- 75			1	
	25-11229- 77			1	
	25-11229- 79			1	
	25-11229- 81			1	
	25-11229- 83			1	
	25-11229- 85			1	
	25-11229- 89			1	
	25-11229- 91			1	
	25-11229- 93			4	
	25-11229- 95			4	
	25-11229- 97			4	
	25-11229- 99			2	
	25-11229-103			2	
	25-11229-105			2	
	25-11229-107			2	
	25-11229-109			2	
	25-11229-111			2	
	25-11229-113			1	
	25-11229-115			1	
	25-11229-116			1	
	25-11229-117			2	
	25-11229-119			2	

STOCK	PART NUMBER	SOURCE CODE	FIGURE & INDEX NO.	QTY. PER A/C	MICROFILM INDEX
	25-11229-121			2	
	25-11229-123			1	
	25-11230- 1			1	
	25-11230- 2			1	
	25-11230- 3			1	
	25-11230- 4			1	
	25-11230- 5			1	
	25-11230- 6			1	
	25-11230- 7			1	
	25-11230- 8			1	
	25-11230- 9			1	
	25-11230- 10			1	
	25-11230- 11			1	
	25-11230- 12			1	
	25-11230- 13			1	
	25-11230- 14			1	
	25-11230- 15			1	
	25-11230- 16			1	
	25-11230- 17			1	
	25-11230- 18			1	
	25-11230- 19			1	
	25-11230- 20			1	
	25-11230- 21			1	
	25-11230- 22			1	
	25-11230- 23			1	
	25-11230- 24			1	
	25-11230- 25			1	
	25-11230- 26			1	
	25-11230- 27			1	
	25-11230- 28			1	
	25-11230- 29			1	
	25-11230- 30			1	
	25-11230- 31			1	
	25-11230- 32			1	
	25-11230- 33			1	
	25-11230- 34			1	
	25-11230- 35			1	
	25-11230- 36			1	
	25-11230- 37			1	
	25-11230- 38			1	
	25-11230- 39			1	
	25-11230- 40			1	
	25-11230- 41			1	
	25-11230- 42			1	
	25-11230- 43			1	
	25-11230- 44			1	
	25-11230- 45			1	
	25-11230- 46			1	
	25-11230- 49			1	
	25-11230- 50			1	
	25-11230- 51			1	
	25-11230- 52			1	
	25-11230- 53			1	
	25-11230- 54			1	
	25-11230- 55			2	
	25-11230- 59			1	
	25-11230- 60			1	
	25-11230- 61			1	
	25-11230- 62			1	
	25-11230- 63			1	
	25-11230- 64			1	
	25-11230- 65			1	
	25-11230- 66			1	
	25-11230- 67			1	
	25-11230- 68			1	
	25-11230- 69			1	
	25-11230- 70			1	
	25-11230- 71			2	
	25-11230- 73			2	
	25-11230- 75			2	
	25-11230- 77			1	
	25-11230- 78			1	
	25-11230- 79			4	
	25-11230- 81			2	
	25-11230- 83			4	
	25-11230- 87			4	
	25-11230- 89			2	
	25-11230- 91			2	
	25-11230- 93			2	
	25-11230- 95			2	
	25-11230- 97			2	
	25-11230-603			2	
	25-11230-604			2	
	25-11230-605			2	
	25-11230-606			2	
	25-11231- 1			1	
	25-11231- 2			1	
	25-11231- 3			1	
	25-11231- 4			1	
	25-11231- 5			1	
	25-11231- 6			1	
	25-11231- 7			1	
	25-11231- 8			1	
	25-11231- 9			1	
	25-11231- 10			1	
	25-11231- 11			1	

STOCK	PART NUMBER	SOURCE CODE	FIGURE & INDEX NO.	QTY. PER A/C	MICROFILM INDEX
	25-11231- 12			1	
	25-11231- 13			1	
	25-11231- 14			1	
	25-11231- 17			1	
	25-11231- 18			1	
	25-11231- 19			1	
	25-11231- 20			1	
	25-11231- 21			1	
	25-11231- 22			1	
	25-11231- 23			1	
	25-11231- 24			1	
	25-11231- 25			1	
	25-11231- 26			1	
	25-11231- 27			1	
	25-11231- 28			1	
	25-11231- 29			1	
	25-11231- 30			1	
	25-11231- 31			1	
	25-11231- 32			1	
	25-11231- 33			4	
	25-11231- 35			4	
	25-11231- 37			2	
	25-11231- 39			2	
	25-11231- 41			4	
	25-11231- 43			2	
	25-11231- 45			2	
	25-11231- 47			2	
	25-11231- 49			2	
	25-11231- 51			2	
	25-11231- 53			1	
	25-11231- 54			1	
	25-11231-603			2	
	25-11232- 1			1	
	25-11232- 2			1	
	25-11232- 3			1	
	25-11232- 4			1	
	25-11232- 5			1	
	25-11232- 6			1	
	25-11232- 7			1	
	25-11232- 8			1	
	25-11232- 9			1	
	25-11232- 10			1	
	25-11232- 11			1	
	25-11232- 12			1	
	25-11232- 13			1	
	25-11232- 14			1	
	25-11232- 15			1	
	25-11232- 16			1	
	25-11232- 17			1	
	25-11232- 18			1	
	25-11232- 21			2	
	25-11232- 23			2	
	25-11232-603			2	
	25-11233- 1			1	
	25-11233- 2			1	
	25-11233- 3			1	
	25-11233- 4			1	
	25-11233- 5			1	
	25-11233- 6			1	
	25-11233- 7			1	
	25-11233- 8			1	
	25-11233- 11			1	
	25-11233- 12			1	
	25-11233- 13			2	
	25-11233- 15			2	
	25-11233- 17			2	
	25-11234- 1			1	
	25-11234- 3			1	
	25-11234- 5			1	
	25-11234- 7			1	
	25-11235- 1			1	
	25-11235- 3			1	
	25-11235- 5			1	
	25-11235- 7			1	
	25-11235- 9			1	
	25-11235- 11			1	
	25-11236- 1			1	
	25-11236- 2			1	
	25-11236- 3			1	
	25-11236- 4			1	
	25-11237- 5			1	
	25-11237- 5C			1	
	25-11237- 6			1	
	25-11237- 6C			1	
	25-11238- 3			1	
	25-11238- 3C			1	
	25-11238- 4			1	
	25-11238- 4C			1	
	25-11240- 1			2	
	25-11240- 3			2	
	25-11240- 5			2	
	25-11241- 1			1	
	25-11241- 2			1	
	25-11241- 3			1	
	25-11241- 3C			1	
	25-11241- 4			1	
	25-11241- 4C			1	
	25-11242- 3			1	
	25-11242- 4			1	
	25-11244- 3			1	
	25-11244- 4			1	
	25-11244- 5			1	
	25-11244- 6			1	
	25-11245- 3			1	
	25-11245- 4			1	
	25-11245- 5			1	
	25-11245- 6			1	
	25-11246- 3			8	
	25-11247- 3			2	
	25-11247- 4			2	
	25-11248- 3			1	
	25-11248- 4			1	
	25-11249- 3			1	
	25-11249- 4			1	
	25-11250- 3			2	
	25-11251- 3			4	
	25-11252- 3			1	
	25-11252- 4			1	
	25-11252- 5			1	
	25-11252- 6			1	
	25-11252- 7			1	
	25-11252- 8			1	
	25-11252- 9			1	
	25-11252- 10			1	
	25-11252- 11			1	
	25-11252- 12			1	
	25-11252- 13			1	
	25-11252- 14			1	
	25-11252- 15			1	
	25-11253- 3			2	
	25-11253- 4			2	
	25-11254- 3			1	
	25-11254- 4			1	
	25-11255- 1			1	
	25-11255- 3			1	
	25-11255- 5			1	
	25-11255- 7			1	
	25-11256- 3			1	
	25-11256- 4			1	
	25-11257- 3			1	
	25-11257- 4			1	
	25-11257- 5			1	
	25-11257- 6			1	
	25-11257- 7			1	
	25-11257- 8			1	
	25-11258- 1			1	
	25-11258- 2			1	
	25-11258- 3			1	
	25-11258- 4			1	
	25-11258- 5			2	
	25-11258- 9			1	
	25-11258- 10			1	
	25-11258- 11			1	
	25-11258- 12			1	
	25-11258- 13			1	
	25-11258- 14			1	
	25-11258- 15			1	
	25-11258- 16			1	
	25-11258- 17			1	
	25-11258- 18			1	
	25-11258- 19			1	
	25-11258- 20			1	
	25-11258- 21			1	
	25-11258- 22			1	
	25-11258- 23			1	
	25-11258- 24			1	
	25-11258- 25			1	
	25-11258- 26			1	
	25-11258- 27			1	
	25-11258- 28			1	
	25-11258- 29			1	
	25-11258- 30			1	
	25-11258- 31			1	
	25-11258- 32			1	
	25-11258- 33			1	
	25-11258- 34			1	
	25-11258- 37			2	
	25-11258- 39			2	
	25-11258- 41			2	
	25-11258- 42			2	
	25-11258- 43			1	
	25-11258- 44			1	
	25-11258- 45			2	
	25-11259- 3			4	
	25-11259- 5			2	
	25-11260			2	
	25-11261- 3			6	
	25-11261- 5			6	
	25-11261- 7			2	
	25-11262- 7			2	
	25-11262- 9			2	
	25-11263- 1			1	

STOCK	PART NUMBER	SOURCE CODE	FIGURE & INDEX NO.	QTY. PER A/C	MICROFILM INDEX
	25-11263- 2			1	
	25-11263- 3			1	
	25-11263- 4			1	
	25-11264- 3			1	
	25-11264- 4			1	
	25-11265- 3			1	
	25-11265- 4			1	
	25-11266- 3			1	
	25-11266- 4			1	
	25-11267- 1			1	
	25-11267- 2			1	
	25-11268- 3			1	
	25-11268- 4			1	
	25-11268-3-4F			2	
	25-11269- 3			1	
	25-11269- 4			1	
	25-11269-3-4F			2	
	25-11270- 3			1	
	25-11270- 5			1	
	25-11271- 1		18 -118	1	
	25-11271- 2		18 -118	1	
	25-11271- 3			1	
	25-11271- 4			1	
	25-11271- 5			2	
	25-11272- 3		19 - 31	4	
	25-11273- 1		19 - 12	1	
	25-11273- 2		19 - 12	1	
	25-11273- 3			2	
	25-11273- 3C			2	
	25-11273- 4			2	
	25-11273- 4C			2	
	25-11274- 1		19 -	2	
	25-11274- 2		19 -	2	
	25-11275- 3		19 - 18	2	
	25-11275- 3C			2	
	25-11275- 4		19 - 18	2	
	25-11275- 4C			2	
	25-11276- 3		19 - 14	8	
	25-11277- 3		19 - 21	2	
	25-11277- 4		19 - 21	2	
	25-11278- 3		19 - 16	4	
	25-11279- 3		19 - 23	4	
	25-11280- 3		19 - 29	4	
	25-11281- 3		19 - 20	2	
	25-11281- 4		19 - 20	2	
	25-11282- 1		19 - 24	2	
	25-11282- 2		19 - 24	2	
	25-11282- 3			2	
	25-11282- 4			2	
	25-11282- 5			2	
	25-11282- 6			2	
	25-11282- 7		19 - 26	2	
	25-11282- 8		19 - 26	2	
	25-11282- 9		19 - 27	2	
	25-11282- 10		19 - 27	2	
	25-11297- 1			2	
	25-11297- 2			2	
	25-11297- 3			2	
	25-11297- 4			2	
	25-11297- 5			2	
	25-11297- 6			2	
	25-11297- 7			2	
	25-11297- 8			2	
	25-11298- 1			1	
	25-11298- 2			1	
	25-11299- 3			1	
	25-11299- 4			1	
	25-11300- 1			1	
	25-11300- 2			1	
	25-11301- 1			1	
	25-11301- 2			1	
	25-11301- 3			1	
	25-11301- 4			1	
	25-11302- 1			1	
	25-11302- 2			1	
	25-11302- 3			1	
	25-11302- 4			1	
	25-11302- 5			1	
	25-11302- 6			1	
	25-11302- 7			1	
	25-11302- 8			1	
	25-11302- 9			1	
	25-11302- 10			1	
	25-11302- 13			1	
	25-11302- 14			1	
	25-11302- 15			2	
	25-11302- 16			1	
	25-11302- 17			1	
	25-11302- 18			1	
	25-11302- 19			1	
	25-11302- 20			1	
	25-11302- 21			1	
	25-11302- 22			1	
	25-11302- 23			1	
	25-11302- 24			1	
	25-11302- 25			1	

STOCK	PART NUMBER	SOURCE CODE	FIGURE & INDEX NO.	QTY. PER A/C	MICROFILM INDEX
	25-11302- 26			1	
	25-11302- 27			1	
	25-11302- 28			1	
	25-11302- 29			1	
	25-11302- 30			1	
	25-11302- 31			1	
	25-11302- 32			1	
	25-11302- 33			1	
	25-11302- 34			1	
	25-11302- 35			2	
	25-11302- 38			2	
	25-11302- 40			1	
	25-11302- 41			1	
	25-11302- 42			1	
	25-11302- 43			2	
	25-11302- 45			2	
	25-11302- 47			2	
	25-11302- 49			1	
	25-11302- 51			1	
	25-11302- 63			2	
	25-11302- 65			2	
	25-11302- 67			2	
	25-11302- 68			1	
	25-11302- 69			1	
	25-11302- 71			1	
	25-11302- 72			1	
	25-11302- 73			4	
	25-11302- 74			2	
	25-11302- 75			1	
	25-11302- 77			1	
	25-11302- 79			2	
	25-11302- 81			2	
	25-11302- 83			2	
	25-11302- 85			2	
	25-11302- 87			2	
	25-11302- 89			2	
	25-11302- 91			1	
	25-11302- 92			1	
	25-11302- 95			1	
	25-11302- 96			1	
	25-11302- 97			1	
	25-11302- 98			1	
	25-11302- 99			2	
	25-11302-101			2	
	25-11302-103			1	
	25-11302-104			1	
	25-11302-339			1	
	25-11303- 1			1	
	25-11303- 2			1	
	25-11303- 3			1	
	25-11303- 5			1	
	25-11303- 6			1	
	25-11303- 7			1	
	25-11303- 8			1	
	25-11303- 9			1	
	25-11303- 10			1	
	25-11303- 11			1	
	25-11303- 12			1	
	25-11303- 13			1	
	25-11303- 15			1	
	25-11303- 16			1	
	25-11303- 17			1	
	25-11303- 18			1	
	25-11303- 19			1	
	25-11303- 20			1	
	25-11303- 21			1	
	25-11303- 22			1	
	25-11303- 23			1	
	25-11303- 25			1	
	25-11303- 27			1	
	25-11303- 28			1	
	25-11303- 29			1	
	25-11303- 30			1	
	25-11303- 31			1	
	25-11303- 32			1	
	25-11303- 33			1	
	25-11303- 34			1	
	25-11303- 35			1	
	25-11303- 36			1	
	25-11303- 37			7	
	25-11303- 38			6	
	25-11303- 39			2	
	25-11303- 40			1	
	25-11303- 41			1	
	25-11303- 42			1	
	25-11303- 43			1	
	25-11303- 44			1	
	25-11303- 45			1	
	25-11303- 47			1	
	25-11303- 49			1	
	25-11303- 51			1	
	25-11303- 52			1	
	25-11303- 53			2	
	25-11303- 55			2	
	25-11303- 57			2	
	25-11303- 59			2	

STOCK	PART NUMBER	SOURCE CODE	FIGURE & INDEX NO.	QTY. PER A/C	MICROFILM INDEX
	25-11303- 61			1	
	25-11303- 62			1	
	25-11303- 63			2	
	25-11303- 65			2	
	25-11303- 67			2	
	25-11303- 69			2	
	25-11303- 71			1	
	25-11303- 73			1	
	25-11303- 75			1	
	25-11303- 77			1	
	25-11303- 79			1	
	25-11303- 81			5	
	25-11303- 83			6	
	25-11303- 85			4	
	25-11303- 87			16	
	25-11303- 89			1	
	25-11303- 91			2	
	25-11303- 93			2	
	25-11303- 95			1	
	25-11303- 97			4	
	25-11303- 99			1	
	25-11303-101			6	
	25-11303-103			4	
	25-11303-105			3	
	25-11303-107			1	
	25-11303-109			1	
	25-11303-110			1	
	25-11303-111			2	
	25-11303-113			2	
	25-11303-115			1	
	25-11303-117			1	
	25-11303-119			1	
	25-11303-121			1	
	25-11303-123			1	
	25-11303-124			1	
	25-11303-125			2	
	25-11303-127			2	
	25-11303-129			2	
	25-11303-131			4	
	25-11303-133			2	
	25-11303-135			2	
	25-11303-137			2	
	25-11303-139			2	
	25-11303-141			6	
	25-11303-143			2	
	25-11303-145			2	
	25-11303-147			2	
	25-11303-149			2	
	25-11303-151			2	
	25-11303-153			2	
	25-11303-155			1	
	25-11303-157			1	
	25-11303-159			1	
	25-11303-161			1	
	25-11303-163			2	
	25-11303-165			1	
	25-11303-167			1	
	25-11303-169			1	
	25-11303-171			1	
	25-11303-173			1	
	25-11303-175			1	
	25-11303-177			1	
	25-11303-179			1	
	25-11303-181			1	
	25-11303-183			1	
	25-11303-185			1	
	25-11303-187			1	
	25-11303-188			1	
	25-11303-189			1	
	25-11303-190			1	
	25-11303-191			1	
	25-11303-193			1	
	25-11303-194			1	
	25-11303-195			2	
	25-11303-197			2	
	25-11303-199			2	
	25-11303-201			1	
	25-11303-203			1	
	25-11303-205			1	
	25-11304- 1			1	
	25-11304- 2			1	
	25-11304- 3			1	
	25-11304- 4			1	
	25-11304- 5			1	
	25-11304- 6			1	
	25-11304- 7			1	
	25-11304- 8			1	
	25-11304- 9			1	
	25-11304- 10			1	
	25-11304- 11			1	
	25-11304- 12			1	
	25-11304- 13			1	
	25-11304- 14			1	
	25-11304- 15			1	
	25-11304- 16			1	
	25-11304- 17			1	
	25-11304- 18			1	
	25-11304- 19			1	
	25-11304- 20			1	
	25-11304- 21			1	
	25-11304- 22			1	
	25-11304- 23			1	
	25-11304- 24			1	
	25-11304- 25			1	
	25-11304- 26			1	
	25-11304- 27			1	
	25-11304- 28			1	
	25-11304- 29			1	
	25-11304- 30			1	
	25-11304- 31			1	
	25-11304- 32			1	
	25-11304- 33			1	
	25-11304- 34			1	
	25-11304- 35			1	
	25-11304- 36			1	
	25-11304- 37			1	
	25-11304- 38			1	
	25-11304- 39			2	
	25-11304- 40			2	
	25-11304- 41			2	
	25-11304- 42			2	
	25-11304- 43			1	
	25-11304- 44			1	
	25-11304- 45			1	
	25-11304- 46			1	
	25-11304- 47			1	
	25-11304- 48			1	
	25-11304- 49			1	
	25-11304- 50			1	
	25-11304- 51			2	
	25-11304- 53			2	
	25-11304- 55			6	
	25-11304- 57			2	
	25-11304- 59			2	
	25-11304- 61			2	
	25-11304- 63			2	
	25-11304- 65			2	
	25-11304- 67			2	
	25-11304- 69			2	
	25-11304- 71			2	
	25-11304- 73			2	
	25-11304- 75			2	
	25-11304- 77			1	
	25-11304- 78			1	
	25-11304- 79			2	
	25-11304- 81			2	
	25-11304- 83			2	
	25-11304- 87			2	
	25-11304- 89			2	
	25-11304- 91			2	
	25-11304- 93			2	
	25-11304- 95			4	
	25-11304- 97			2	
	25-11304- 99			1	
	25-11304-100			1	
	25-11304-101			2	
	25-11304-103			4	
	25-11304-105			2	
	25-11304-107			2	
	25-11304-109			4	
	25-11304-113			2	
	25-11304-115			2	
	25-11304-117			4	
	25-11304-119			4	
	25-11304-121			2	
	25-11304-123			2	
	25-11304-125			4	
	25-11304-127			4	
	25-11304-129			1	
	25-11304-130			1	
	25-11304-131			2	
	25-11304-133			2	
	25-11304-135			2	
	25-11304-137			1	
	25-11304-138			1	
	25-11304-139			1	
	25-11304-140			1	
	25-11304-141			1	
	25-11304-142			1	
	25-11304-143			1	
	25-11304-144			1	
	25-11304-145			1	
	25-11304-146			1	
	25-11304-147			1	
	25-11304-148			1	
	25-11304-149			1	
	25-11304-150			1	
	25-11304-151			1	
	25-11304-152			1	
	25-11304-153			2	
	25-11304-155			2	
	25-11304-157			2	

STOCK	PART NUMBER	SOURCE CODE	FIGURE & INDEX NO.	QTY. PER A/C	MICROFILM INDEX
	25-11305- 1			1	
	25-11305- 2			1	
	25-11305- 3			1	
	25-11305- 4			1	
	25-11305- 7			1	
	25-11305- 8			1	
	25-11305- 11			1	
	25-11305- 12			1	
	25-11305- 13			1	
	25-11305- 14			1	
	25-11305- 15			1	
	25-11305- 16			1	
	25-11305- 19			1	
	25-11305- 20			1	
	25-11305- 21			1	
	25-11305- 22			1	
	25-11305- 23			1	
	25-11305- 24			1	
	25-11305- 25			1	
	25-11305- 26			1	
	25-11305- 27			1	
	25-11305- 28			1	
	25-11305- 41			1	
	25-11305- 42			1	
	25-11305- 47			1	
	25-11305- 48			1	
	25-11305- 49			1	
	25-11305- 50			1	
	25-11305- 63			2	
	25-11305- 65			2	
	25-11305- 69			1	
	25-11305- 70			1	
	25-11305- 71			1	
	25-11305- 72			1	
	25-11305- 73			1	
	25-11305- 74			1	
	25-11305- 75			1	
	25-11305- 76			1	
	25-11305- 77			1	
	25-11305- 78			1	
	25-11305- 79			1	
	25-11305- 80			1	
	25-11305- 81			1	
	25-11305- 82			1	
	25-11305- 83			2	
	25-11305- 85			1	
	25-11305- 86			1	
	25-11305- 87			1	
	25-11305- 88			1	
	25-11305- 89			1	
	25-11305- 90			1	
	25-11305- 91			1	
	25-11305- 92			1	
	25-11305- 93			1	
	25-11305- 94			1	
	25-11305- 95			1	
	25-11305- 96			1	
	25-11305- 97			1	
	25-11305- 98			1	
	25-11305- 99			1	
	25-11305-100			1	
	25-11305-101			1	
	25-11305-102			1	
	25-11305-103			1	
	25-11305-104			1	
	25-11305-105			1	
	25-11305-106			1	
	25-11305-107			1	
	25-11305-108			1	
	25-11305-109			1	
	25-11305-110			1	
	25-11305-111			2	
	25-11305-113			2	
	25-11305-115			1	
	25-11305-116			1	
	25-11305-117			1	
	25-11305-118			1	
	25-11305-119			1	
	25-11305-120			1	
	25-11305-121			1	
	25-11305-122			1	
	25-11305-123			1	
	25-11305-124			1	
	25-11305-125			1	
	25-11305-126			1	
	25-11305-127			2	
	25-11305-129			2	
	25-11305-131			1	
	25-11305-132			1	
	25-11305-133			2	
	25-11305-134			2	
	25-11305-135			1	
	25-11305-136			1	
	25-11305-137			2	
	25-11305-139			1	
	25-11305-140			1	

STOCK	PART NUMBER	SOURCE CODE	FIGURE & INDEX NO.	QTY. PER A/C	MICROFILM INDEX
	25-11305-141			2	
	25-11305-143			1	
	25-11305-144			1	
	25-11305-145			1	
	25-11305-146			1	
	25-11305-147			2	
	25-11305-149			1	
	25-11305-150			1	
	25-11305-151			2	
	25-11305-153			2	
	25-11305-155			2	
	25-11305-157			2	
	25-11305-159			2	
	25-11305-160			2	
	25-11305-161			2	
	25-11305-163			1	
	25-11305-164			1	
	25-11305-165			1	
	25-11305-166			1	
	25-11305-167			2	
	25-11305-169			2	
	25-11305-175			2	
	25-11305-177			6	
	25-11305-179			2	
	25-11305-181			1	
	25-11305-182			1	
	25-11305-183			1	
	25-11305-184			1	
	25-11305-185			1	
	25-11305-186			1	
	25-11305-187			1	
	25-11305-188			1	
	25-11305-189			1	
	25-11305-190			1	
	25-11305-191			1	
	25-11305-192			1	
	25-11305-193			2	
	25-11305-195			1	
	25-11305-196			1	
	25-11305-197			1	
	25-11305-198			1	
	25-11305-199			2	
	25-11305-201			2	
	25-11305-203			2	
	25-11305-205			2	
	25-11305-207			1	
	25-11305-208			1	
	25-11305-209			1	
	25-11305-210			1	
	25-11305-211			1	
	25-11305-212			1	
	25-11305-213			1	
	25-11305-214			1	
	25-11305-215			1	
	25-11305-216			1	
	25-11305-217			1	
	25-11305-218			1	
	25-11305-219			1	
	25-11305-220			1	
	25-11305-221			1	
	25-11305-222			1	
	25-11305-223			2	
	25-11305-225			2	
	25-11305-227			2	
	25-11305-229			1	
	25-11305-230			1	
	25-11305-231			2	
	25-11305-233			1	
	25-11305-234			1	
	25-11305-235			1	
	25-11305-236			1	
	25-11305-237			1	
	25-11305-238			1	
	25-11305-239			2	
	25-11305-241			2	
	25-11305-243			1	
	25-11305-244			1	
	25-11305-245			1	
	25-11305-246			1	
	25-11307- 1			1	
	25-11307- 2			1	
	25-11307- 3			1	
	25-11307- 4			1	
	25-11307- 5			1	
	25-11307- 6			1	
	25-11307- 7			1	
	25-11307- 8			1	
	25-11307- 9			1	
	25-11307- 10			1	
	25-11307- 11			1	
	25-11307- 12			1	
	25-11307- 13			1	
	25-11307- 14			1	
	25-11307- 15			3	
	25-11307- 16			3	
	25-11307- 17			1	

STOCK	PART NUMBER	SOURCE CODE	FIGURE & INDEX NO.	QTY. PER A/C	MICROFILM INDEX
	25-11307- 19			1	
	25-11307- 20			1	
	25-11307- 21			1	
	25-11307- 22			1	
	25-11307- 23			1	
	25-11307- 24			1	
	25-11307- 25			1	
	25-11307- 26			1	
	25-11307- 27			1	
	25-11307- 28			1	
	25-11307- 29			1	
	25-11307- 30			1	
	25-11307- 31			1	
	25-11307- 32			1	
	25-11307- 33			1	
	25-11307- 34			1	
	25-11307- 35			1	
	25-11307- 36			1	
	25-11307- 37			2	
	25-11307- 39			2	
	25-11307- 41			2	
	25-11307- 43			1	
	25-11307- 44			1	
	25-11307- 45			2	
	25-11307- 47			2	
	25-11307- 49			2	
	25-11307- 51			1	
	25-11308- 1			1	
	25-11308- 2			1	
	25-11308- 3			1	
	25-11308- 4			1	
	25-11308- 7			1	
	25-11308- 8			1	
	25-11308- 9			1	
	25-11308- 10			1	
	25-11308- 11			1	
	25-11308- 12			1	
	25-11308- 13			1	
	25-11308- 14			1	
	25-11308- 15			1	
	25-11308- 16			1	
	25-11308- 17			1	
	25-11308- 18			1	
	25-11310- 1			1	
	25-11310- 2			1	
	25-11310- 3			1	
	25-11310- 4			1	
	25-11310- 5			2	
	25-11310- 7			1	
	25-11310- 8			1	
	25-11310- 9			1	
	25-11310- 10			1	
	25-11310- 11			1	
	25-11310- 12			1	
	25-11310- 13			1	
	25-11310- 14			1	
	25-11310- 15			1	
	25-11310- 16			1	
	25-11310- 17			1	
	25-11310- 18			1	
	25-11310- 19			1	
	25-11310- 20			1	
	25-11310- 21			1	
	25-11310- 22			1	
	25-11310- 23			1	
	25-11310- 24			1	
	25-11310- 25			1	
	25-11310- 26			1	
	25-11310- 27			1	
	25-11310- 28			1	
	25-11310- 29			2	
	25-11310- 31			2	
	25-11310- 33			2	
	25-11317- 3			4	
	25-14500- 1		15 - 8	1	E-80
		*	23 -		
	25-14500- 2	*	15 - 8	1	
			23 -		
	25-14500-301			1	
	25-14500-302			1	
	25-14501- 3F	X1		1	B-380
	25-14501- 4F	X1		1	
R82MDA-	25-14502- 1	P1	23 - 30	1	XA-56
R82KDA-	25-14502- 2	P1	23 - 30	1	
	25-14502- 5	X1		2	
	25-14502- 6	X1		2	
R82MDA-	25-14503- 1	P	23 - 17	4	B-381
	25-14503- 3	M1		2	
	25-14503- 5	M1		4	
	25-14504- 3	M1		2	B-383
	25-14504- 5			2	
	25-14504-301	P	23 - 24	2	
	25-14504-303			2	
R82KDA-	25-14505- 3		23 - 7	4	B-384
R82MDA-	25-14506- 3	P1	23 - 21	4	B-385
R82MDA-	25-14507- 3	P1	23 - 22	2	B-386

STOCK	PART NUMBER	SOURCE CODE	FIGURE & INDEX NO.	QTY. PER A/C	MICROFILM INDEX
	25-14507- 5			2	
	25-14507- 7			2	
	25-14508- 3		23 - 27	4	A-186
	25-14509- 5		23 - 26	2	XA-16
	25-14510- 3		23 - 19	4	A-188
R82MDA-	25-14511- 1		23 - 12	4	A-189
	25-14511- 3	X1		4	
R82MDA-	25-14512- 1		23 - 4	4	B-387
	25-14512- 3	M1		4	
R82MDA-	25-14513- 1	P	23 - 8	2	B-388
	25-14513- 3	M1		2	
	25-14513- 5			2	
	25-14513-301			2	
	25-14514- 3			2	
	25-14515- 3	M1	23 - 20	4	A-190
R82MDA-	25-14516- 3	P	23 - 2	4	A-191
	25-14517- 3F			1	
	25-14517- 4F			1	
	25-14518- 1			1	
	25-14518- 2			1	
	25-14518- 3			1	
	25-14518- 4			1	
	25-14519- 1			1	
	25-14519- 2			1	
	25-14519- 3			1	
	25-14519- 4			1	
	25-14550-303		15 - 9	1	
			23 -		
	25-14550-304		15 - 9	1	
			23 -		
	25-14550-305			1	
	25-14550-306			1	
	25-14551- 5	M		4	B-389
	25-14551- 7			2	
	25-14551- 8			2	
	25-14551-301		23 - 43	3	
	25-14551-302		23 - 43	2	
R82MDA-	25-14552- 3	P	23 - 48	4	A-192
R82MDA-	25-14553- 1	P1	23 - 50	2	B-390
R82MDA-	25-14553- 2	P1	23 - 50	2	
	25-14553- 3	X1		2	
	25-14553- 3C	X1		2	
	25-14553- 4	X1		2	
	25-14553- 4C	X1		2	
	25-14555- 3		23 - 45	4	
	25-14557- 1		23 - 34	2	
	25-14557- 2		23 - 34	2	
	25-14557- 3		23 - 40	4	
	25-14557- 5		23 - 39	4	
	25-14557- 7		23 - 37	2	
	25-14557- 8		23 - 37	2	
	25-15000- 1	*	2 -	1	E-82
	25-15000- 2	*	2 -	1	
R82MDA-	25-15001- 1		2 - 7	1	C-347
R82MDA-	25-15001- 2	P1	2 - 7	1	
	25-15001- 3			1	
	25-15001- 4			1	
	25-15002- 1	X1	2 - 19	1	E-83 THRU E-86
			4 -		
	25-15002- 2	X1	2 - 19	1	
			4 -		
	25-15002- 3	M1		1	
	25-15002- 4	M1		1	
	25-15002- 5	M1		1	
	25-15002- 6	M1		1	
	25-15002- 7	M1		1	
	25-15002- 8	M1		1	
	25-15002- 9	M1		2	
	25-15002- 11	M1		2	
	25-15002- 13	M1		2	
	25-15002- 15	M1		1	
	25-15002- 16	M1		1	
	25-15002- 17	M1		1	
	25-15002- 18	M1		1	
	25-15002- 19	M1		2	
	25-15002- 21	M1		2	
	25-15002- 23	M1		2	
	25-15002- 25	M1		2	
	25-15002- 27	M1		1	
	25-15002- 28	M1		1	
	25-15002- 29	M1		1	
	25-15002- 30	M1		1	
	25-15002- 31	M1		1	
	25-15002- 32	M1		1	
	25-15002- 33	M1		2	
	25-15002- 35	M1		2	
	25-15002- 37	M1		2	
	25-15002- 39	M1		2	
	25-15002- 41			1	
	25-15002- 42			1	
	25-15002- 43	M1		1	
	25-15002- 44	M1		1	
	25-15002- 45	M1		1	
	25-15002- 46	M1		1	
	25-15002- 47	M1		1	
	25-15002- 48	M1		1	

STOCK	PART NUMBER	SOURCE CODE	FIGURE & INDEX NO.	QTY. PER A/C	MICROFILM INDEX
	25-15002- 49	M1		1	
	25-15002- 50	M1		1	
	25-15002- 51	M1		1	
	25-15002- 52	M1		1	
	25-15002- 53	M1		1	
	25-15002- 54	M1		1	
	25-15002- 55	M1		1	
	25-15002- 56	M1		1	
	25-15002- 57	M1		1	
	25-15002- 58	M1		1	
	25-15002- 59	M1		1	
	25-15002- 60	M1		1	
	25-15002- 61	M1		1	
	25-15002- 62	M1		1	
	25-15002- 63	M1		1	
	25-15002- 64	M1		1	
	25-15002- 65	M1		1	
	25-15002- 66	M1		1	
	25-15002- 67	M1		1	
	25-15002- 68	M1		1	
	25-15002- 71	M1		1	
	25-15002- 72	M1		1	
	25-15002- 73	X2	4 - 40	1	
	25-15002- 74	X2	4 - 40	1	
	25-15002- 75	X2	4 - 39	3	
	25-15002- 76	X2	4 - 39	3	
	25-15002- 77	M1		1	
	25-15002- 78	M1		1	
	25-15002- 79	X2	4 - 58	3	
	25-15002- 80	X2	4 - 58	3	
	25-15002- 81	X2	4 - 57	1	
	25-15002- 82	X2	4 - 57	1	
	25-15002- 83	M1		2	
	25-15002- 85	M1		1	
	25-15002- 86	M1		1	
	25-15002- 87	M1		2	
	25-15002- 89	M1		1	
	25-15002- 90	M1		1	
	25-15002- 91	M1		2	
	25-15002- 93	M1		1	
	25-15002- 94	M1		1	
	25-15002- 95	M1		1	
	25-15002- 96	M1		1	
	25-15002- 97	M1		2	
	25-15002- 99	M1		2	
	25-15002-101	M1		2	
	25-15002-103	M1		1	
	25-15002-104	M1		1	
	25-15002-105	M1		2	
	25-15002-107	M1		2	
	25-15002-109	M1		1	
	25-15002-110	M1		1	
	25-15002-111	M1		2	
	25-15002-113	M1		1	
	25-15002-114	M1		1	
	25-15002-115	M1		2	
	25-15002-117	M1		2	
	25-15002-125	M1		1	
	25-15002-126	M1		1	
	25-15002-127	M1		1	
	25-15002-128	M1		1	
	25-15002-129	M1		4	
	25-15002-131	M1		4	
	25-15002-133	M1		4	
	25-15002-135	M1		4	
	25-15003- 1	X1	5 -	1	E-87
	25-15003- 2	X1	5 -	1	
	25-15003- 3	X2	5 - 52	2	
	25-15003- 5	M1		2	
	25-15003- 7	M1		2	
	25-15003- 9	M1		2	
	25-15003- 11	M1		2	
	25-15003- 13	M1		2	
	25-15003- 15	M1		1	
	25-15003- 16	M1		1	
	25-15003- 17	M1		2	
	25-15003- 19	M1		2	
	25-15003- 21	M1		1	
	25-15003- 22	M1		1	
	25-15003- 23	M1		2	
	25-15003- 25	M1		2	
	25-15003- 27	M1		2	
	25-15003- 29	M1		2	
	25-15003- 31	M1		1	
	25-15003- 32	M1		1	
	25-15003- 33	M1		1	
	25-15003- 34	M1		1	
	25-15003- 35	M1		2	
	25-15003- 37	M1		2	
	25-15003- 39	M1		1	
	25-15003- 40	M1		1	
	25-15003- 41	M1		1	
	25-15003- 42	M1		1	
	25-15003- 43	M1		2	
	25-15003-301	X1	5 -	1	
	25-15003-302	X1	5 -	1	

STOCK	PART NUMBER	SOURCE CODE	FIGURE & INDEX NO.	QTY. PER A/C	MICROFILM INDEX
	25-15004- 1	X1	4 -	1	E-88
	25-15004- 2	X1	4 -	2	
	25-15004- 3	M1		1	
	25-15004- 4	M1		1	
	25-15004- 5	M1		1	
	25-15004- 7	M1		1	
	25-15004- 9	M1		1	
	25-15004- 10	M1		1	
	25-15004- 11	M1		1	
	25-15004- 13	M1		1	
	25-15004- 15	M1		1	
	25-15004- 17	M1		1	
	25-15004- 19	M1		1	
	25-15004- 20	M1		1	
	25-15004- 25	M1		2	
	25-15004- 27	M1		1	
	25-15004- 28	M1		1	
	25-15004- 31	M1		1	
	25-15004- 32	M1		1	
	25-15004- 35	M1		2	
	25-15004- 37	M1		2	
	25-15004- 39	M1		1	
	25-15004- 40	M1		1	
	25-15004- 41	M1		2	
	25-15004- 45	M1		1	
	25-15004- 46	M1		1	
	25-15004- 47	M1		2	
	25-15004- 49	M1		1	
	25-15004- 50	M1		1	
	25-15004- 51	M1		2	
	25-15004- 53	M1		2	
	25-15004- 55	M1		2	
	25-15004- 57	M1		1	
	25-15004- 58	M1		1	
	25-15004- 59	M1		1	
	25-15004- 60	M1		1	
	25-15004- 61	M1		4	
	25-15004- 63	M1		1	
	25-15004- 65	M1		1	
	25-15004- 67	M1		1	
	25-15004- 69	M1		4	
	25-15004- 71	M1		2	
	25-15004- 73	M1		1	
	25-15004- 74	M1		1	
	25-15004- 75	M1		1	
	25-15004- 76	M1		1	
	25-15004- 77	M1		2	
	25-15004- 79	M1		2	
	25-15004- 81	M1		2	
	25-15004- 83	M1		2	
	25-15004- 85	M1		2	
	25-15004- 87	M1		1	
	25-15004- 88	M1		1	
	25-15004- 89	M1		1	
	25-15004- 90	M1		1	
	25-15004- 91	M1		1	
	25-15004- 93	M1		1	
	25-15004- 95	M1		1	
	25-15004- 97	M1		1	
	25-15004- 98	M1		1	
	25-15004- 99	M1		1	
	25-15004-100	M1		1	
	25-15004-101	M1		1	
	25-15005- 1	X1	4 -	2	E-89 E-90
	25-15005- 2	X1	4 -	2	
	25-15005- 3	X1		1	
	25-15005- 4	X1		1	
	25-15005- 5	M1		1	
	25-15005- 6	M1		1	
	25-15005- 7	M1		1	
	25-15005- 8	M1		1	
	25-15005- 9	M1		1	
	25-15005- 10	M1		1	
	25-15005- 11	M1		1	
	25-15005- 12	M1		1	
	25-15005- 13	M1		1	
	25-15005- 14	M1		1	
	25-15005- 15	M1		2	
	25-15005- 17	M1	4 - 9	1	
	25-15005- 18	M1	4 - 9	1	
	25-15005- 19	M1		2	
	25-15005- 21	M1		2	
	25-15005- 23	M1		2	
	25-15005- 25	M1		2	
	25-15005- 27	M1		2	
	25-15005- 29	M1		2	
	25-15005- 31	M1		2	
	25-15005- 33	M1		2	
	25-15005- 35	M1		6	
	25-15005- 37	M1		3	
	25-15005- 38	M1		3	
	25-15005- 39	M1		6	
	25-15005- 41	M1		6	
	25-15005- 43	M1		6	
	25-15005- 45	M1		2	
	25-15005- 46	M1		2	

STOCK	PART NUMBER	SOURCE CODE	FIGURE & INDEX NO.	QTY. PER A/C	MICROFILM INDEX
	25-15005- 47	M1		2	
	25-15005- 48	M1		2	
	25-15006- 3	X1		1	E-91
	25-15006- 4	X1		1	
	25-15006- 5	X1		1	
	25-15006- 6	X1		1	
	25-15007- 3	X1		1	E-92
	25-15007- 4	X1		1	
	25-15008- 3	X1		1	E-93
	25-15008- 4	X1		1	
	25-15009- 3			1	E-94
	25-15009- 4			1	
	25-15009- 5			1	
	25-15009- 6			1	
R82MDA-	25-15010- 1	P1	4 - 22	1	E-95
R82MDA-	25-15010- 2	P1	4 - 22	1	
	25-15010- 3	X1		2	
	25-15010- 4	X1		1	
	25-15011- 1	P1	5 - 51	1	E-96
	25-15011- 2	P1	5 - 51	1	
	25-15011- 5	X1		1	
	25-15011- 6	X1		1	
	25-15011- 7			1	
	25-15011- 8			1	
	25-15011-301			1	
	25-15011-302			1	
	25-15012- 1	M1	4 -	1	E-97
	25-15012- 2	M1	4 -	1	
	25-15012- 3	M1	4 - 19	1	
	25-15012- 4	M1	4 - 19	1	
	25-15012- 7	M1		1	
	25-15012- 8	M1		1	
	25-15012- 9	M1		1	
	25-15012- 10	M1		1	
	25-15012- 11	M1		2	
	25-15012- 13	M1		2	
	25-15012- 15	M1		2	
	25-15012- 17	M1		2	
	25-15012- 21	M1	4 - 18	1	
	25-15012- 22	M1	4 - 18	1	
	25-15012- 23	M1		2	
	25-15012- 25	M1		2	
	25-15012- 27	M1		6	
	25-15012- 29	M1		2	
	25-15012- 35	M1		1	
	25-15012- 36	M1		1	
	25-15012- 37	M1		1	
	25-15012- 38	M1		1	
	25-15012- 39	M1		1	
	25-15012- 40	M1		1	
	25-15012- 41	M1		4	
	25-15012- 43	M1		4	
	25-15012- 45	M1		4	
	25-15012- 47	M1		4	
	25-15012- 49	M1		2	
	25-15012- 51	M1		1	
	25-15012- 52	M1		1	
	25-15012- 53	M1		1	
	25-15012- 54	M1		1	
	25-15012- 55	M1		1	
	25-15012- 56	M1		1	
	25-15012- 57	M1		1	
	25-15012- 58	M1		1	
	25-15012- 61	M1		1	
	25-15012- 62	M1		1	
	25-15012- 63	M1		1	
	25-15012- 64	M1		1	
	25-15012- 65	M1		1	
	25-15012- 66	M1		1	
	25-15012- 67	M1		1	
	25-15012- 68	M1		1	
	25-15012- 69	M1		1	
	25-15012- 70	M1		1	
	25-15012- 71	M1		2	
	25-15012- 73	M1		2	
	25-15012- 75	M1		1	
	25-15012- 76	M1		1	
	25-15012- 79	M1		4	
	25-15012- 81	M1		2	
	25-15012- 83	M1		2	
	25-15012- 85	M1		2	
	25-15012- 87	M1		4	
	25-15012- 89	M1		4	
	25-15012- 91	M1		4	
	25-15012- 93	M1		1	
	25-15012- 94	M1		1	
	25-15012- 95	M1		1	
	25-15012- 96	M1		1	
	25-15012- 97	M1		1	
	25-15012- 98	M1		1	
	25-15012- 99	M1		1	
	25-15012-100	M1		1	
	25-15012-103	M1		2	
	25-15012-111	M1		2	
	25-15012-113	M1		2	
	25-15012-115	M1		1	
	25-15012-116	M1		1	
	25-15012-121			2	
	25-15012-127			2	
	25-15012-131			2	
	25-15013- 1	M1		1	E-98
	25-15013- 2	M1		1	
	25-15013- 3	M1		1	
	25-15013- 4	M1		1	
	25-15013- 7	M1		1	
	25-15013- 8	M1		1	
	25-15013- 9	M1		1	
	25-15013- 10	M1		1	
	25-15013- 11	M1		1	
	25-15013- 12	M1		1	
	25-15013- 13	M1		1	
	25-15013- 14	M1		1	
	25-15014- 3	X1		2	C-348
	25-15015- 1	M1		1	E-99
	25-15015- 2	M1		1	
	25-15015- 3	M1		1	
	25-15015- 4	M1		1	
	25-15015- 7	M1		1	
	25-15015- 8	M1		1	
	25-15015- 9	M1		1	
	25-15015- 10	M1		1	
	25-15015- 11	M1		1	
	25-15015- 12	M1		1	
	25-15015- 13	M1		1	
	25-15015- 14	M1		1	
	25-15016- 1	M1	4 -	1	XA-162
	25-15016- 2	M1	4 -	1	
	25-15016- 3	M1		1	
	25-15016- 4	M1		1	
	25-15016- 5	M1		2	
	25-15016- 7			1	
	25-15016- 8			1	
	25-15016- 9			1	
	25-15016- 10			1	
	25-15016- 11	M1		2	
	25-15016- 13	M1		4	
	25-15016- 15	M1		4	
	25-15016- 17	M1		4	
	25-15016- 19	M1		4	
	25-15016- 21	M1		4	
	25-15016- 23	M1		1	
	25-15016- 24	M1		1	
	25-15016- 25	M1		2	
	25-15016- 27	M1		2	
	25-15016- 29	M1		2	
	25-15016- 30	M1		2	
	25-15016- 31	M1		4	
	25-15016- 33	M1		2	
	25-15016- 35	M1		2	
	25-15016- 37	M1		1	
	25-15016- 38	M1		1	
	25-15016- 39	M1		2	
	25-15016- 41	M1		2	
	25-15016- 42	M1		2	
	25-15016- 43	M1		2	
	25-15016- 44	M1		2	
	25-15016- 45			1	
	25-15016- 46			1	
	25-15016- 47			1	
	25-15016- 48			1	
	25-15016- 49			1	
	25-15016- 50			1	
	25-15016- 51			1	
	25-15016- 52			1	
	25-15016- 53			2	
	25-15016- 55			2	
	25-15016- 57			1	
	25-15016- 58			1	
	25-15016- 59			2	
	25-15016- 61			2	
	25-15016- 63			2	
	25-15016- 65			2	
	25-15016- 67			2	
	25-15016- 69			2	
	25-15016-301			1	
	25-15016-302			1	
	25-15017- 3	X1		1	E-101
	25-15017- 4	X1		1	
	25-15018- 5	X1		1	E-102
	25-15018- 6	X1		1	
	25-15018- 7	X1		1	
	25-15018- 8	X1		1	
	25-15018- 9	X1		1	
	25-15018- 10	X1		1	
	25-15019- 1	M1		1	E-103
	25-15019- 2	M1		1	
	25-15019- 3	M1		1	
	25-15019- 4	M1		1	
	25-15019- 5	M1		1	
	25-15019- 6	M1		1	
	25-15019- 7	M1		2	
	25-15019- 9	M1		2	

STOCK	PART NUMBER	SOURCE CODE	FIGURE & INDEX NO.	QTY. PER A/C	MICROFILM INDEX
	25-15019- 11	M1		4	
	25-15019- 13	M1		2	
	25-15020- 1	M1		1	E-104
	25-15020- 2	M1		1	
	25-15020- 3	M1		1	
	25-15020- 5	M1		1	
	25-15020- 7			1	
	25-15020- 8			1	
	25-15020- 9			2	
	25-15020-301			1	
	25-15020-302			1	
	25-15021- 1	M1		1	E-105
	25-15021- 2	M1		1	
	25-15021- 3	M1		1	
	25-15021- 5	M1		1	
	25-15021- 7	M1		1	
	25-15021- 9	M1		1	
	25-15022- 1	M1		1	E-106
	25-15022- 2	M1		1	
	25-15022- 3	M1		1	
	25-15022- 5	M1		1	
	25-15022- 7			1	
	25-15022- 8			1	
	25-15022-301			1	
	25-15022-302			1	
	25-15023- 1	M1		1	E-107
	25-15023- 2	M1		1	
	25-15023- 3	M1		1	
	25-15023- 5	M1		1	
	25-15023- 7	M1		1	
	25-15023- 9	M1		1	
	25-15023- 11	M1		2	
	25-15023- 19	M1		2	
	25-15023- 21	M1		1	
	25-15023- 22	M1		1	
	25-15023- 23	M1		1	
	25-15023- 24	M1		1	
	25-15023- 25	M1		1	
	25-15023- 26	M1		1	
	25-15024- 1	M1		1	E-108
	25-15024- 2	M1		1	
	25-15024- 3	M1		1	
	25-15024- 4	M1		1	
	25-15024- 5			2	
	25-15024- 7			1	
	25-15024- 8			1	
	25-15024-301			1	
	25-15024-302			1	
	25-15025- 1	M1		1	E-109
	25-15025- 2	M1		1	
	25-15025- 3	M1		1	
	25-15025- 4	M1		1	
	25-15025- 7	M1		1	
	25-15025- 8	M1		1	
	25-15025- 9	M1		1	
	25-15025- 10	M1		1	
	25-15025- 11	M1		1	
	25-15025- 12	M1		1	
	25-15026- 1	M1		2	E-110
	25-15026- 2	M1		1	
	25-15026- 3	M1		1	
	25-15026- 4	M1		1	
	25-15026- 5			1	
	25-15026- 6			1	
	25-15026-301			1	
	25-15026-302			1	
	25-15027- 1	M1		1	E-111
	25-15027- 2	M1		1	
	25-15027- 3	M1		1	
	25-15027- 4	M1		1	
	25-15027- 5	M1		1	
	25-15027- 6	M1		1	
	25-15027- 7	M1		1	
	25-15027- 8	M1		1	
	25-15027- 9	M1		1	
	25-15027- 10	M1		1	
	25-15027- 11	M1		1	
	25-15027- 12	M1		1	
	25-15028- 7	X1		1	C-349
	25-15028- 8	X1		1	
	25-15028- 13	*		6	
	25-15028- 15	X1	4 - 40	1	
	25-15028- 16	X1	4 - 40	1	
	25-15028- 17			4	
	25-15028- 19			1	
	25-15028- 20			1	
	25-15029- 11	X1		1	B-392
	25-15029- 13	X1		1	
	25-15029- 15	X1		2	
	25-15029- 17	X1		1	
	25-15029- 19	X1		1	
	25-15030- 1	*	4 -	1	E-112
	25-15030- 2	*	4 -	1	
R82MDA-	25-15030- 3	P1	4 - 43	1	
R82MDA-	25-15030- 4	P1	4 - 43	1	
R82MDA-	25-15030- 5	P1	4 - 47	1	
R82MDA-	25-15030- 6	P1	4 - 47	1	
	25-15030- 7	X1		1	
	25-15030- 8	X1		1	
	25-15030- 9	M1		1	
	25-15030- 10	M1		1	
	25-15030- 11	X1		1	
	25-15030- 12	X1		1	
	25-15030- 13	M1		1	
	25-15030- 14	M1		1	
	25-15030- 15	M1		4	
	25-15030- 19	M1		4	
	25-15030- 21	M1		2	
	25-15030- 23	M1		2	
	25-15030- 25	M1		4	
	25-15030- 29	M1		4	
	25-15030- 33	M1		2	
	25-15030- 35	M1		2	
	25-15030- 37	M1		2	
	25-15030- 39	M1		4	
	25-15030- 43	M1		4	
	25-15030- 47	M1		4	
	25-15030- 49	M1		2	
	25-15030- 53	M1		2	
	25-15030- 55	M1		2	
	25-15030- 57	M1		4	
	25-15030- 59	M1		2	
	25-15030- 61			4	
	25-15030- 63			4	
	25-15030- 65			4	
	25-15030- 67			4	
	25-15031- 1	M1	4 - 27	6	C-350
	25-15031- 3	M1		6	
	25-15032- 1	*	4 -	1	E-113
	25-15032- 2	*	4 -	1	
	25-15032- 3	M1	4 - 51	1	
	25-15032- 4	M1	4 - 51	1	
	25-15032- 5	M1		1	
	25-15032- 6	M1		1	
	25-15032- 7	M1		1	
	25-15032- 8	M1		1	
	25-15032- 9	M1		1	
	25-15032- 10	M1		2	
	25-15032- 11	M1		1	
	25-15032- 12	M1		1	
	25-15032- 13	M1		1	
	25-15032- 14	M1		1	
	25-15032- 15	M1		4	
	25-15032- 17	M1		2	
	25-15032- 19	M1		2	
	25-15032- 21	M1		4	
	25-15032- 23	X1		1	
	25-15032- 24	X1		1	
	25-15032- 25	M1		2	
	25-15032- 27	M1		2	
	25-15033- 1	*	4 -	1	
	25-15033- 2	*	4 -	1	
	25-15033- 3	X2	4 -	1	
	25-15033- 4	X2	4 -	1	
	25-15033- 5	M1		1	
	25-15033- 6	M1		1	
	25-15033- 7	M1		1	
	25-15033- 9	M1		1	
	25-15033- 11	M1		6	
	25-15033- 13	M1		6	
	25-15033- 15	M1		2	
	25-15033- 17	M1		2	
	25-15033- 19	M1		4	
	25-15033- 21	M1		3	
	25-15033- 23	M1		4	
	25-15033- 25	M1		2	
	25-15033- 27	M1		2	
	25-15033- 29	M1		4	
	25-15033- 31	M1		2	
	25-15033- 33	M1		4	
	25-15033- 35			4	
	25-15033- 37	M1		2	
	25-15033- 39	M1		2	
	25-15033- 41	M1		1	
	25-15033- 43	M1		2	
	25-15033- 45	M1		6	
	25-15033- 47	M1		2	
	25-15033- 49	M1		2	
	25-15033- 51	M1		6	
	25-15033- 53	M1		4	
	25-15033- 55	M1		2	
	25-15033- 57	M1		4	
	25-15033- 59	M1		3	
	25-15033- 61	M1		2	
	25-15033- 63	M1		4	
	25-15033- 65	M1		2	
	25-15033- 67	M1		4	
	25-15033- 69	M1		2	
	25-15033- 71	M1		1	
	25-15033- 73	M1		3	
	25-15033- 75	M1		1	
	25-15033- 77	M1		2	

STOCK	PART NUMBER	SOURCE CODE	FIGURE & INDEX NO.	QTY. PER A/C	MICROFILM INDEX
	25-15033- 79			2	
	25-15033- 81	M1		1	
	25-15033- 83	M1		2	
	25-15033- 85	M1		2	
	25-15033- 87	M1		4	
	25-15033- 89	M1		1	
	25-15033- 90	M1		1	
	25-15033- 91	M1		1	
	25-15033- 93	M1		1	
	25-15033-101	X2	4 - 52	1	
	25-15033-102	X2	4 - 52	1	
	25-15033-301			1	
	25-15033-302			1	
	25-15034- 3	*		12	C-351
	25-15034- 5	X1	4 - 57	1	
	25-15034- 6	X1	4 - 57	1	
	25-15034- 7	X1		1	
	25-15034- 8	X1		1	
	25-15034- 9	X1	4 -	1	
	25-15034- 10	X1	4 -	1	
	25-15034- 13			1	
	25-15034- 14			1	
	25-15034- 17			1	
	25-15034- 18			1	
	25-15034- 19			1	
	25-15034- 20			1	
	25-15035- 11	X1		1	C-352
	25-15035- 12	X1		1	
	25-15035- 15	*		14	
	25-15035- 19	X1		2	
	25-15035- 20	X1		2	
	25-15035- 21	X1		1	
	25-15035- 22	X1		1	
	25-15035- 23	X1	4 - 39	1	
	25-15035- 24	X1	4 - 39	1	
	25-15035- 25			8	
	25-15035- 27			1	
	25-15035- 28			1	
	25-15035- 29			1	
	25-15035- 30			1	
R82MDA-	25-15036- 3	P1	4 - 10	1	E-115
R82MDA-	25-15036- 4	P1	4 - 10	1	
	25-15037- 1	M1	4 - 11	1	E-116
	25-15037- 2	M1	4 - 11	1	
	25-15037- 3	M1		1	
	25-15037- 4	M1		1	
	25-15037- 5	M1		1	
	25-15037- 6	M1		1	
	25-15037- 7	M1		1	
	25-15037- 8	M1		1	
	25-15037- 9	M1		2	
	25-15037- 11	M1		2	
	25-15037- 13	M1		2	
	25-15037- 15	M1		1	
	25-15037- 16	M1		1	
	25-15037- 17	M1		2	
	25-15037- 19	M1		2	
	25-15037- 21	M1		2	
	25-15037- 23	M1		2	
	25-15037- 25			2	
	25-15037- 27			2	
	25-15037- 29	M1		2	
	25-15037- 31	M1		2	
	25-15037- 33		4 - 13	2	
	25-15037- 34		4 - 13	2	
	25-15037- 35	M1		2	
	25-15037- 36	M1		1	
	25-15037- 37	M1		4	
	25-15037- 39	M1		2	
	25-15038- 3	*	4 - 58	2	C-353
	25-15038- 5	X1		1	
	25-15038- 6	X1		1	
	25-15038- 7			4	
	25-15038- 9			1	
	25-15038- 10			1	
	25-15039- 3	M1	4 - 37	5	A-193
	25-15040- 1	*	4 - 1	1	E-117 E-118 E-119
			5 -		
	25-15040- 3	*	4 - 1	1	
			5 -		
	25-15040- 5	M1	5 - 1	1	
	25-15040- 7	M1	5 - 1	1	
	25-15040- 9	M1	5 - 25	3	
	25-15040- 10	M1	5 - 25	3	
	25-15040- 11	M1	5 - 36	3	
	25-15040- 12	M1	5 - 36	3	
	25-15040- 13	M1	5 - 7	1	
	25-15040- 14	M1	5 - 7	1	
	25-15040- 15	M1	5 - 50	1	
	25-15040- 16	M1	5 - 50	1	
	25-15040- 17	M1		1	
	25-15040- 18	M1		1	
	25-15040- 19	M1		1	
	25-15040- 20	M1		1	
	25-15040- 21	M1		1	

STOCK	PART NUMBER	SOURCE CODE	FIGURE & INDEX NO.	QTY. PER A/C	MICROFILM INDEX
	25-15040- 22	M1		1	
	25-15040- 23	M1		2	
	25-15040- 25	M1		2	
	25-15040- 29	M1		1	
	25-15040- 31	M1		1	
	25-15040- 33	M1		1	
	25-15040- 35	M1		1	
	25-15040- 37	M1		1	
	25-15040- 38	M1		1	
	25-15040- 39	M1		1	
	25-15040- 40	M1		1	
	25-15040- 41	M1		1	
	25-15040- 42	M1		1	
	25-15040- 43	M1		1	
	25-15040- 44	M1		1	
	25-15040- 45	M1		1	
	25-15040- 46	M1		1	
	25-15040- 47	M1		1	
	25-15040- 48	M1		1	
	25-15040- 51	M1		1	
	25-15040- 52	M1		1	
	25-15040- 53			2	
	25-15040- 54	M1		2	
	25-15040- 55	M1		1	
	25-15040- 56	M1		1	
	25-15040- 57	M1		1	
	25-15040- 58	M1		1	
	25-15040- 59	M1		1	
	25-15040- 60	M1		1	
	25-15040- 61	M1		1	
	25-15040- 62	M1		1	
	25-15040- 63	M1		1	
	25-15040- 64	M1		1	
	25-15040- 65	M1		1	
	25-15040- 66	M1		1	
	25-15040- 67	M1		2	
	25-15040- 68	M1		2	
	25-15040- 69	M1		1	
	25-15040- 70	M1		1	
	25-15040- 71	M1		2	
	25-15040- 72	M1		2	
	25-15040- 73	M1		1	
	25-15040- 74	M1		1	
	25-15040- 75	M1		1	
	25-15040- 76	M1		1	
	25-15040- 77	M1		1	
	25-15040- 78	M1		1	
	25-15040- 79	M1		1	
	25-15040- 80	M1		1	
	25-15040- 81	M1		1	
	25-15040- 82	M1		1	
	25-15040- 83	M1		1	
	25-15040- 84	M1		1	
	25-15040- 85	M1		2	
	25-15040- 86	M1		2	
	25-15040- 87	M1		10	
	25-15040- 89	M1		1	
	25-15040- 90	M1		1	
	25-15040- 91	M1		1	
	25-15040- 92	M1		1	
	25-15040- 93	M1		1	
	25-15040- 94	M1		1	
	25-15040- 95	M1		1	
	25-15040- 96	M1		1	
	25-15040- 97	M1		1	
	25-15040- 98	M1		1	
	25-15040- 99	M1		1	
	25-15040-100	M1		1	
	25-15040-101	M1		1	
	25-15040-102	M1		1	
	25-15040-103	M1		1	
	25-15040-104	M1		1	
	25-15040-105	M1		2	
	25-15040-106	M1		2	
	25-15040-107	M1		6	
	25-15040-109	M1		2	
	25-15040-111	M1		2	
	25-15040-113	M1		16	
	25-15040-115	M1		6	
	25-15040-117	M1		2	
	25-15040-119	M1		10	
	25-15040-121	M1		2	
	25-15040-123	M1		6	
	25-15040-127	M1		6	
	25-15040-129	M1		2	
	25-15040-131	M1		2	
	25-15040-133	M1		2	
	25-15040-135	M1		2	
	25-15040-137	M1		2	
	25-15040-139	M1		2	
	25-15040-141	M1		8	
	25-15040-143	M1		2	
	25-15040-145	M1		6	
	25-15040-147	M1		8	
	25-15040-149	M1		2	
	25-15040-151	M1		2	

STOCK	PART NUMBER	SOURCE CODE	FIGURE & INDEX NO.	QTY. PER A/C	MICROFILM INDEX
	25-15040-153	M1		2	
	25-15040-155	M1		2	
	25-15040-157	M1		2	
	25-15040-159	M1		2	
	25-15040-161	M1		16	
	25-15040-163	M1		10	
	25-15040-165	M1		16	
	25-15040-169	M1		8	
	25-15040-171	M1		2	
	25-15040-173	M1		4	
	25-15040-175	M1		2	
	25-15040-177	M1		2	
	25-15040-179	M1		8	
	25-15040-181	M1		2	
	25-15040-183	M1		4	
	25-15040-185	M1		2	
	25-15040-187	M1		16	
	25-15040-189	M1		2	
	25-15040-191	M1		2	
	25-15040-193	M1		2	
	25-15040-195	M1		2	
	25-15040-197	M1		2	
	25-15040-199	M1		2	
	25-15040-203	M1		1	
	25-15040-204	M1		1	
	25-15040-205	M1		1	
	25-15040-206	M1		1	
	25-15040-207	M1		1	
	25-15040-208	M1		1	
	25-15040-209	M1		10	
	25-15040-211	M1		2	
	25-15040-213	M1		2	
	25-15040-215	M1		2	
	25-15040-221			1	
	25-15040-222			1	
	25-15040-223			1	
	25-15040-224			1	
	25-15040-225			2	
	25-15040-227			2	
	25-15040-229			2	
	25-15040-230			2	
	25-15040-231			3	
	25-15040-232			3	
	25-15040-233			3	
	25-15040-234			3	
	25-15040-235			3	
	25-15040-236			3	
	25-15040-237			2	
	25-15040-238			3	
	25-15040-239			1	
	25-15040-247			2	
	25-15040-253			1	
	25-15040-254			1	
	25-15041- 1	M1		1	E-120
	25-15041- 3	M1		1	
	25-15041- 4	M1		1	
	25-15042- 1	*	5 -	2	E-121
	25-15042- 2	*	5 -	2	
	25-15042- 3	M1	5 - 13	1	
	25-15042- 4	M1	5 - 13	1	
	25-15042- 5	M1	5 - 8	2	
	25-15042- 6	M1	5 - 8	2	
	25-15042- 7	M1		1	
	25-15042- 8	M1		1	
	25-15042- 9	M1		1	
	25-15042- 10	M1		1	
	25-15042- 11	M1		1	
	25-15042- 12	M1		1	
	25-15042- 15	M1		2	
	25-15042- 17	M1		2	
	25-15042- 19	M1		1	
	25-15042- 20	M1		1	
	25-15042- 21	M1		1	
	25-15042- 22	M1		1	
	25-15042- 27	M1		1	
	25-15042- 28	M1		1	
	25-15042- 29	M1		1	
	25-15042- 30	M1		1	
	25-15042- 37	M1		1	
	25-15042- 38	M1		1	
	25-15042- 47	M1		1	
	25-15042- 48	M1		1	
	25-15042- 49	M1		1	
	25-15042- 50	M1		1	
	25-15042- 51	M1		1	
	25-15042- 52	M1		1	
	25-15042- 65	M1		2	
	25-15042- 67	M1		2	
	25-15042- 69	M1		2	
	25-15042- 71	M1		2	
	25-15042- 77	M1		2	
	25-15042- 79	M1		2	
	25-15042- 85	M1		1	
	25-15042- 86	M1		1	
	25-15042- 91	M1		2	
	25-15042- 97	M1		1	

STOCK	PART NUMBER	SOURCE CODE	FIGURE & INDEX NO.	QTY. PER A/C	MICROFILM INDEX
	25-15042- 98	M1		1	
	25-15042- 99	M1		1	
	25-15042-100	M1		1	
	25-15042-101	M1		1	
	25-15042-102	M1		1	
	25-15042-103	M1	5 - 12	1	
	25-15042-104	M1	5 - 12	1	
	25-15042-105	M1	5 - 11	2	
	25-15042-107	M1	5 - 9	2	
	25-15042-109	M1	5 - 10	1	
	25-15042-110	M1	5 - 10	1	
	25-15042-111	M1		2	
	25-15042-112	M1		2	
	25-15042-113	M1		1	
	25-15042-114	M1		1	
	25-15042-115	M1		1	
	25-15042-116	M1		1	
	25-15042-117	M1		2	
	25-15042-118	M1		2	
	25-15042-119	M1		2	
	25-15042-120	M1		2	
	25-15042-121	M1		1	
	25-15042-122	M1		1	
	25-15042-123	M1		2	
	25-15042-124	M1		2	
	25-15042-125	M1		2	
	25-15042-126	M1		2	
	25-15042-127	M1		2	
	25-15042-128	M1		2	
	25-15042-129	M1		2	
	25-15042-130	M1		2	
	25-15042-131	M1		2	
	25-15042-132	M1		2	
	25-15042-133	M1		2	
	25-15042-134	M1		2	
	25-15042-135	M1		2	
	25-15042-136	M1		2	
	25-15042-137	M1		2	
	25-15042-138	M1		2	
	25-15042-139			2	
	25-15042-140			2	
	25-15042-141			2	
	25-15042-142			2	
	25-15042-143			2	
	25-15042-144			2	
	25-15042-145			2	
	25-15042-146			2	
	25-15042-147		5 - 8	2	
	25-15042-148		5 - 8	2	
	25-15042-301		5 -	2	
	25-15042-302		5 -	2	
	25-15043- 1	*	5 -	2	E-122
	25-15043- 2	*	5 -	2	
	25-15043- 3		5 - 42	1	
	25-15043- 4	M1	5 - 42	1	
	25-15043- 5	M1	5 - 37	2	
	25-15043- 6	M1	5 - 37	2	
	25-15043- 7	M1		1	
	25-15043- 8	M1		1	
	25-15043- 9	M1		2	
	25-15043- 10	M1		2	
	25-15043- 11	M1		1	
	25-15043- 12	M1		1	
	25-15043- 15	M1		1	
	25-15043- 16	M1		1	
	25-15043- 17	M1		1	
	25-15043- 18			1	
	25-15043- 19			1	
	25-15043- 20			1	
	25-15043- 21			1	
	25-15043- 22			1	
	25-15043- 27		5 - 41	2	
	25-15043- 29		5 - 39	2	
	25-15043- 31	M1		1	
	25-15043- 32	M1		1	
	25-15043- 33	M1		2	
	25-15043- 35	M1		2	
	25-15043- 37	M1		2	
	25-15043- 41			1	
	25-15043- 42			1	
	25-15043- 43			1	
	25-15043- 44			1	
	25-15043- 47			1	
	25-15043- 48	M1		1	
	25-15043- 51	M1		1	
	25-15043- 52	M1		1	
	25-15043- 55	M1		1	
	25-15043- 56	M1		1	
	25-15043- 57	M1		1	
	25-15043- 58	M1		1	
	25-15043- 59	M1		1	
	25-15043- 60	M1		1	
	25-15043- 61	M1		2	
	25-15043- 63	M1		1	
	25-15043- 64	M1		1	
	25-15043- 65	M1		1	

STOCK	PART NUMBER	SOURCE CODE	FIGURE & INDEX NO.	QTY. PER A/C	MICROFILM INDEX
	25-15043- 66	M1		1	
	25-15043- 67	M1		2	
	25-15043- 68	M1		2	
	25-15043- 69	M1		1	
	25-15043- 70	M1		1	
	25-15043- 71	M1		1	
	25-15043- 72	M1		1	
	25-15043- 73	M1		1	
	25-15043- 74	M1		1	
	25-15043- 75	M1		1	
	25-15043- 76	M1		1	
	25-15043- 77	M1		1	
	25-15043- 78	M1		1	
	25-15043- 79	M1		1	
	25-15043- 80	M1		1	
	25-15043- 81	M1		2	
	25-15043- 83	M1	5 - 40	1	
	25-15043- 84		5 - 40	1	
	25-15043- 85		5 - 38	1	
	25-15043- 86	M1	5 - 38	1	
	25-15043- 87	M1		1	
	25-15043- 88	M1		1	
	25-15043- 89	M1		1	
	25-15043- 90	M1		1	
	25-15043- 91	M1		1	
	25-15043- 92	M1		1	
	25-15043- 93	M1		2	
	25-15043- 94	M1		2	
	25-15043- 95			2	
	25-15043- 96	M1		2	
	25-15043- 97	M1		1	
	25-15043- 98	M1		1	
	25-15043- 99	M1		2	
	25-15043-100	M1		2	
	25-15043-101	M1		2	
	25-15043-102	M1		2	
	25-15043-105			2	
	25-15043-106			2	
	25-15043-107			2	
	25-15043-108			2	
	25-15043-109			2	
	25-15043-110			2	
	25-15043-111		5 - 37	2	
	25-15043-112		5 - 37	2	
	25-15043-301		5 -	2	
	25-15043-302		5 -	2	
	25-15044- 1	M1		1	XA-163
	25-15044- 2	M1		1	
	25-15044- 3	M1		1	
	25-15044- 4	M1		1	
	25-15044- 5	M1		1	
	25-15044- 6	M1		1	
	25-15044- 7	M1		1	
	25-15044- 8	M1		1	
	25-15045- 5		4 - 21	2	A-194
	25-15045- 7		18 -110	3	
	25-15046- 1		4 - 28	1	C-354
	25-15046- 2	M1	4 - 28	1	
	25-15046- 3	X1		1	
	25-15046- 4	X1		1	
	25-15047- 23	M		1	XA-164
	25-15047- 24	M		1	
	25-15047- 25	X1		1	
	25-15047- 26	X1		1	
R82MDA-	25-15047-301	P1	2 - 13	1	
R82MDA-	25-15047-302	P1	2 - 13	1	
R82MDA-	25-15048- 1	P1	4 - 14	2	C-355
R82MDA-	25-15048- 2	P1	4 - 14	2	
	25-15049- 3	X1		2	C-356
	25-15049- 4	X1		2	
	25-15050- 3	X1		4	C-357
	25-15050- 3C	X1		4	
	25-15051- 3	M1		1	E-125
	25-15051- 4	M1		1	
	25-15051- 5			1	
	25-15051- 6			1	
	25-15052- 1	M1	4 -	1	E-126
	25-15052- 2	M1	4 -	1	
	25-15052- 3	M1		1	
	25-15052- 4	M1		1	
	25-15052- 5	M1		1	
	25-15052- 6	M1		1	
	25-15052- 7	M1	4 - 3	2	
	25-15052- 9	M1	4 - 2	2	
	25-15052- 11	M1		2	
	25-15052- 13	M1		1	
	25-15052- 14	M1		1	
	25-15052- 15	M1		1	
	25-15052- 16	M1		1	
	25-15052- 17	M1		1	
	25-15052- 18	M1		1	
	25-15054- 1			1	
	25-15054- 2			1	
	25-15054- 3			1	
	25-15054- 4			1	
	25-15054- 5			1	
	25-15054- 6			1	
	25-15054- 7			1	
	25-15054- 8			1	
	25-15054- 9			1	
	25-15054- 10			1	
	25-15054- 11			1	
	25-15054- 12			1	
	25-15055- 11	X1		1	E-127
	25-15055- 12	X1		1	
	25-15055- 13	M1		2	
	25-15055- 15	M1		2	
R82MDA-	25-15055- 17	P1	2 - 10	1	
R82MDA-	25-15055- 19	P1	2 - 10	1	
	25-15055- 21			1	
	25-15055- 22			1	
	25-15055-301		2 - 10	1	
	25-15055-303		2 - 10	1	
R82MDA-	25-15056- 1	P1	4 - 23	2	E-128
R82MDA-	25-15056- 2	P1	4 - 23	2	
	25-15056- 3	X1		2	
	25-15056- 4	X1		2	
	25-15057- 3	M1	4 - 34	4	A-195
	25-15058- 1	M1	4 -	1	E-129
	25-15058- 2	M1	4 -	1	
	25-15058- 3	M1		1	
	25-15058- 4	M1		1	
	25-15058- 5	M1	4 - 30	1	
	25-15058- 6	M1	4 - 30	1	
	25-15058- 7	M1		1	
	25-15058- 8	M1		1	
	25-15058- 9	M1		1	
	25-15058- 10	M1		1	
	25-15058- 11	M1		2	
	25-15058- 13	M1		4	
	25-15058- 15	M1		2	
	25-15058- 17	M1		4	
	25-15058- 19	M1		1	
	25-15058- 20	M1		1	
	25-15058- 21	M1		1	
	25-15058- 22	M1		1	
	25-15058- 25	M1		1	
	25-15059- 1	M1	4 -	1	E-130
	25-15059- 2		4 -	1	
	25-15059- 3	M1		1	
	25-15059- 4	M1		1	
	25-15059- 5	M1		1	
	25-15059- 6	M1		1	
	25-15059- 7	M1		1	
	25-15059- 8	M1		1	
	25-15059- 9	M1		1	
	25-15059- 10	M1		1	
	25-15059- 11	M1		1	
	25-15059- 12	M1		1	
	25-15059- 13	M1		2	
	25-15059- 15	M1		2	
	25-15059- 16	M1		2	
	25-15059- 17	M1		1	
	25-15059- 18	M1		1	
	25-15059- 19	M1		2	
	25-15059- 21	M1		2	
	25-15059- 23	M1		2	
	25-15059- 25	M1		2	
	25-15059- 35	M1		2	
	25-15059- 37	M1		2	
	25-15059- 39	M1		2	
	25-15059- 41	M1		2	
	25-15059- 43	M1		2	
	25-15060- 1	M1	4 -	1	E-131
	25-15060- 2	M1	4 -	1	
	25-15060- 3	M1		1	
	25-15060- 4	M1		1	
	25-15060- 5		4 - 25	1	
	25-15060- 6	M1	4 - 25	1	
	25-15060- 7	M1		4	
	25-15060- 9	M1		2	
	25-15060- 11	M1		2	
	25-15060- 13	M1		4	
	25-15060- 15	M1		2	
	25-15060- 17	M1		2	
	25-15060- 21	M1		2	
	25-15060- 23	M1		2	
	25-15060-601			2	
	25-15061- 1		4 -	1	E-132
	25-15061- 2	M1	4 -	1	
	25-15061- 3	M1		1	
	25-15061- 4	M1		1	
	25-15061- 5	M1		1	
	25-15061- 6	M1		1	
	25-15061- 7	M1		1	
	25-15061- 8	M1		1	
	25-15061- 9	M1		1	
	25-15061- 10	M1		1	
	25-15061- 11	M1		1	
	25-15061- 12	M1		1	
	25-15061- 13	M1		2	
	25-15061- 15	M1		2	

STOCK	PART NUMBER	SOURCE CODE	FIGURE & INDEX NO.	QTY. PER A/C	MICROFILM INDEX
	25-15061- 16			2	
	25-15061- 17	M1		1	
	25-15061- 18	M1		1	
	25-15061- 19	M1		2	
	25-15061- 21	M1		2	
	25-15061- 23	M1		2	
	25-15061- 25	M1		2	
	25-15061- 29	M1		2	
	25-15061- 33	M1		2	
	25-15061- 37	M1		2	
	25-15061- 39	M1		2	
	25-15061- 41	M1		2	
	25-15061- 43	M1		2	
	25-15062- 1	M1		1	E-133
	25-15062- 2	M1		1	
	25-15062- 3			1	
	25-15062- 4			3	
	25-15062- 5	M1		1	
	25-15062- 6	M1		1	
	25-15062- 7	M1		1	
	25-15062- 8	M1		1	
	25-15062- 9	M1		1	
	25-15062- 10	M1		1	
	25-15062- 11	M1		1	
	25-15062- 12	M1		1	
	25-15062- 13			1	
	25-15062- 14			1	
	25-15062- 17	M1		2	
	25-15062- 19	M1		1	
	25-15062- 20	M1		1	
	25-15062- 21	M1		2	
	25-15062- 22	M1		2	
	25-15062- 23	M1		1	
	25-15062- 24	M1		1	
	25-15062- 25	M1		2	
	25-15062- 26	M1		2	
	25-15062- 27	M1		6	
	25-15062- 28	M1		6	
	25-15062- 29	M1		2	
	25-15062- 30	M1		2	
	25-15062- 31	M1		3	
	25-15062- 32	M1		3	
	25-15062- 33	M1		4	
	25-15062- 35	M1		2	
	25-15062- 36	M1		2	
	25-15062- 37	M1		2	
	25-15062- 38	M1		2	
	25-15062- 39			1	
	25-15062- 40			1	
	25-15062- 41			1	
	25-15062- 42			1	
	25-15062- 43			1	
	25-15062- 44			1	
	25-15062- 45			1	
	25-15062- 46			1	
	25-15062- 47			1	
	25-15062- 48			1	
	25-15062- 49			1	
	25-15062- 50			1	
	25-15062- 51			1	
	25-15062- 52			1	
	25-15062- 53			1	
	25-15062- 54			1	
	25-15062- 55			1	
	25-15062- 56			1	
	25-15062- 57			1	
	25-15062- 58			1	
	25-15062- 59			1	
	25-15062- 60			1	
	25-15062-301			1	
	25-15062-302			1	
	25-15063- 1	M1		1	E-134
	25-15063- 2	M1		1	
	25-15063- 3	M1		1	
	25-15063- 4	M1		1	
	25-15063- 7	M1		1	
	25-15063- 8	M1		1	
	25-15063- 9	M1		1	
	25-15063- 10	M1		1	
	25-15063- 13	M1		1	
	25-15063- 14	M1		1	
	25-15063- 15	M1		1	
	25-15063- 16	M1		1	
	25-15063- 17	M1		2	
	25-15063- 19	M1		2	
	25-15063- 21	M1		2	
	25-15063- 25	M1		1	
	25-15063- 26	M1		1	
	25-15063- 27	M1		1	
	25-15063- 28	M1		1	
	25-15063- 29	M1		1	
	25-15063- 30	M1		1	
	25-15064- 1	M1	4 -	1	E-135
	25-15064- 2	M1	4 -	1	
	25-15064- 3	M1		1	
	25-15064- 4	M1		1	

STOCK	PART NUMBER	SOURCE CODE	FIGURE & INDEX NO.	QTY. PER A/C	MICROFILM INDEX
	25-15064- 5	M1		2	
	25-15064- 6	M1		2	
	25-15064- 9	M1		1	
	25-15064- 10	M1		1	
	25-15064- 11	M1		4	
	25-15064- 13	M1		2	
	25-15064- 15	M1		2	
	25-15064- 17	M1		2	
	25-15064- 19	M1		4	
	25-15064- 21	M1		8	
	25-15064- 23	M1		4	
	25-15064- 25	M1		4	
	25-15064- 31	M1		8	
	25-15064- 35	M1		1	
	25-15064- 36	M1		1	
	25-15064- 37	M1	4 - 24	1	
	25-15064- 38	M1	4 - 24	1	
	25-15064- 39	M1		1	
	25-15064- 40	M1		1	
	25-15064- 41	M1		4	
	25-15064- 43			1	
	25-15064- 44			1	
	25-15064- 45			1	
	25-15064- 46			1	
	25-15064- 47			2	
	25-15064- 49			2	
	25-15064- 51			2	
	25-15064- 53			2	
	25-15064- 54			2	
	25-15064- 55			2	
	25-15064- 57			1	
	25-15064- 58			1	
	25-15064- 59			1	
	25-15064- 60			1	
	25-15064- 61			1	
	25-15064- 62			1	
	25-15064- 63			1	
	25-15064- 64			1	
	25-15064- 65			1	
	25-15064- 66			1	
	25-15064- 67			1	
	25-15064- 68			1	
	25-15064- 69			1	
	25-15064- 70			1	
	25-15064-301			1	
	25-15064-302			1	
	25-15065- 1	M1		1	E-136
	25-15065- 2	M1		1	
	25-15065- 3	M1		1	
	25-15065- 4	M1		1	
	25-15065- 5	M1		1	
	25-15065- 6	M1		1	
	25-15065- 7	M1		2	
	25-15065- 9	M1		2	
	25-15065- 11	M1		1	
	25-15065- 12	M1		1	
	25-15065- 13	M1		1	
	25-15065- 14	M1		1	
	25-15065- 15	M1		1	
	25-15065- 16	M1		1	
	25-15065- 17	M1		1	
	25-15065- 18	M1		1	
	25-15065- 19	M1		1	
	25-15065- 20	M1		1	
	25-15065- 21	M1		1	
	25-15065- 22	M1		1	
	25-15065- 23	M1		1	
	25-15065- 24	M1		1	
	25-15065- 25	M1		1	
	25-15065- 26	M1		1	
	25-15065- 27	M1		2	
	25-15065- 29			1	
	25-15065- 30			1	
	25-15065- 31			1	
	25-15065- 32			1	
	25-15065- 33			1	
	25-15065- 34			1	
	25-15065- 35			1	
	25-15065- 36			1	
	25-15065- 37			1	
	25-15065- 38			1	
	25-15065- 39			2	
	25-15065- 41			1	
	25-15065- 42			1	
	25-15065- 43			1	
	25-15065- 44			1	
	25-15066- 1	M1		1	E-137
	25-15066- 2	M1		1	
	25-15066- 3	M1		1	
	25-15066- 4	M1		1	
	25-15066- 5	M1		1	
	25-15066- 6	M1		1	
	25-15066- 7	M1		1	
	25-15066- 8	M1		1	
	25-15066- 9	M1		1	
	25-15066- 10	M1		1	

STOCK	PART NUMBER	SOURCE CODE	FIGURE & INDEX NO.	QTY. PER A/C	MICROFILM INDEX
	25-15066- 11	M1		1	
	25-15066- 12	M1		1	
	25-15066- 13	M1		1	
	25-15066- 14	M1		1	
	25-15066- 15	M1		1	
	25-15066- 16	M1		1	
	25-15066- 17	M1		1	
	25-15066- 18	M1		1	
	25-15066- 19	M1		1	
	25-15066- 20	M1		1	
	25-15066- 21	M1		1	
	25-15066- 22	M1		1	
	25-15066- 23	M1		1	
	25-15066- 24	M1		1	
	25-15066- 25	M1		1	
	25-15066- 26	M1		1	
	25-15066- 27	M1		1	
	25-15066- 28	M1		1	
	25-15066- 29	M1		1	
	25-15066- 30	M1		1	
	25-15066- 31	M1		2	
	25-15066- 33			2	
	25-15067- 1	*	4 -	1	E-138
	25-15067- 2	*	4 -	1	
	25-15067- 3		4 - 41	1	
	25-15067- 4		4 - 41	1	
	25-15067- 5		4 - 42	2	
	25-15067- 6	M1	4 - 42	1	
	25-15067- 7	M1		1	
	25-15067- 8			1	
	25-15067- 9	M1		1	
	25-15067- 10	M1		1	
	25-15067- 11	M1		1	
	25-15067- 12	M1		1	
	25-15067- 13	M1		1	
	25-15067- 14	M1		1	
	25-15067- 15	M1		1	
	25-15067- 16	M1		1	
	25-15067- 17	M1		4	
	25-15067- 19	M1		2	
	25-15067- 21	M1		2	
	25-15067- 23	M1		2	
	25-15067- 25	M1		2	
	25-15067- 27			2	
	25-15067- 29	M1		2	
	25-15067- 31	M1		4	
	25-15067- 33	M1		2	
	25-15067- 35	M1		4	
	25-15067- 37	M1		2	
	25-15067- 39	M1		2	
	25-15067- 41	M1		2	
	25-15067- 43	M1		2	
	25-15067- 45	M1		2	
	25-15067- 47	M1		2	
	25-15067- 49	M1		2	
	25-15067- 51	M1		2	
	25-15067- 53	M1		1	
	25-15067- 54	M1		1	
	25-15067- 55	M1		1	
	25-15067- 56	M1		1	
	25-15067- 57	M1		1	
	25-15067- 58	M1		1	
	25-15067- 59	M1		1	
	25-15067- 60	M1		2	
	25-15067- 61	M1		1	
	25-15067- 62	M1		1	
	25-15067- 63	M1		1	
	25-15067- 64	M1		1	
	25-15067- 65	M1		1	
	25-15067- 66	M1		1	
	25-15067- 67	M1		1	
	25-15067- 68	M1		1	
	25-15067- 69	M1		1	
	25-15067- 70	M1		1	
	25-15067- 71			1	
	25-15067- 72			1	
	25-15067- 73			1	
	25-15067- 74			1	
	25-15067- 75			1	
	25-15067- 76			1	
	25-15067- 77			1	
	25-15067- 78			1	
	25-15067- 79			1	
	25-15067- 80			1	
	25-15067- 81			2	
	25-15067- 83			1	
	25-15067- 84			1	
	25-15067- 85			1	
	25-15067- 86			1	
	25-15067-301			1	
	25-15067-302			1	
	25-15067-303			1	
	25-15067-304			1	
	25-15068- 1			1	
	25-15068- 2			1	
	25-15068- 3			1	
	25-15068- 4			1	
	25-15068- 5			1	
	25-15068- 6			1	
R82MDA-	25-15069- 3	M1	4 - 36	4	A-196
R82MDA-	25-15069- 5	M1	4 - 33	4	
	25-15070- 3	M1	4 - 12	2	E-139
	25-15071- 3	*		2	C-358
	25-15071- 5	X1		1	
	25-15071- 6	X1		1	
	25-15071- 7			4	
	25-15071- 11			1	
	25-15071- 12			1	
	25-15071- 13			1	
	25-15071- 14			1	
	25-15072- 1	X1		1	E-140
	25-15072- 2	X1		1	
	25-15072- 3	M1		2	
	25-15072- 7	M1		1	
	25-15072- 8	M1		1	
	25-15072- 11	M1		1	
	25-15072- 12	M1		1	
	25-15072- 17	M1		1	
	25-15072- 18	M1		1	
	25-15072- 19	M1		1	
	25-15072- 20	M1		1	
	25-15072- 21	M1		1	
	25-15072- 22	M1		1	
	25-15072- 23	M1		1	
	25-15072- 24	M1		1	
	25-15072- 25	M1		2	
	25-15072- 27	M1		2	
	25-15072- 29	M1		1	
	25-15072- 30	M1		1	
	25-15072- 31	M1		2	
	25-15072- 33	M1		2	
	25-15072- 35	M1		2	
	25-15072- 37	M1		2	
	25-15072- 39	M1		4	
	25-15072- 41	M1		2	
	25-15072- 43	M1		1	
	25-15072- 44	M1		1	
	25-15073- 3	M1		1	C-359
	25-15073- 4	M1		1	
	25-15073- 5			1	
	25-15073- 6			1	
	25-15073- 7			2	
	25-15074- 1	M1		1	E-141
	25-15074- 2	M1		1	
	25-15074- 5	M1		1	
	25-15074- 6	M1		1	
	25-15074- 7	M1		1	
	25-15074- 8	M1		1	
	25-15074- 9	M1		1	
	25-15074- 10	M1		1	
	25-15074- 11	M1		1	
	25-15074- 12	M1		1	
	25-15074- 13	M1		1	
	25-15074- 14	M1		1	
	25-15075- 1	M1		1	D-308
	25-15075- 2	M1		1	
	25-15075- 5	M1		1	
	25-15075- 6	M1		1	
	25-15075- 7	M1		1	
	25-15075- 8	M1		1	
	25-15075- 9	M1		1	
	25-15075- 10	M1		1	
	25-15075- 11	M1		1	
	25-15075- 12	M1		1	
	25-15076- 3	M1		1	E-142
	25-15076- 4	M1		1	
	25-15076- 5			1	
	25-15076- 6			1	
	25-15076- 7			2	
	25-15077- 3			4	C-360
	25-15077- 5			2	
	25-15077- 7			2	
	25-15078- 1	M1		1	E-143
	25-15078- 2	M1		1	
	25-15078- 3	M1		1	
	25-15078- 4	M1		1	
	25-15078- 5	M1		1	
	25-15078- 6	M1		1	
	25-15078- 7	M1		1	
	25-15078- 8	M1		1	
	25-15078- 9	M1		1	
	25-15078- 10	M1		1	
	25-15078- 11	M1		1	
	25-15078- 12	M1		1	
	25-15078- 13	M1		1	
	25-15078- 14	M1		1	
	25-15078- 15	M1		1	
	25-15078- 16	M1		1	
	25-15078- 17	M1		1	
	25-15078- 18	M1		1	
	25-15078- 19	M1		2	
	25-15078- 21	M1		2	

STOCK	PART NUMBER	SOURCE CODE	FIGURE & INDEX NO.	QTY. PER A/C	MICROFILM INDEX
	25-15078- 23	M1		1	
	25-15078- 24	M1		1	
	25-15078- 25	M1		1	
	25-15078- 26	M1		1	
	25-15078- 27	M1		1	
	25-15078- 28	M1		1	
	25-15078- 29	M1		1	
	25-15078- 30	M1		1	
	25-15078- 31	M1		1	
	25-15078- 32	M1		1	
	25-15078- 33	M1		1	
	25-15078- 34	M1		1	
	25-15079- 3	P1	4 - 20	1	E-144
	25-15079- 4	P1	4 - 20	1	
	25-15080- 1	M1		1	D-309
	25-15080- 2	M1		1	
	25-15080- 3	M1		1	
	25-15080- 4	M1		1	
	25-15080- 5	M1		2	
	25-15081- 1	M1		1	D-310
	25-15081- 2	M1		1	
	25-15081- 3	M1		1	
	25-15081- 4	M1		1	
	25-15081- 5	M1		2	
	25-15082- 3	M1		1	D-311
	25-15082- 4	M1		1	
	25-15083- 3	M1		1	D-312
	25-15083- 4	M1		1	
	25-15084- 3	M1		1	D-313
	25-15084- 4	M1		1	
	25-15085- 1	M1		1	D-314
	25-15085- 2	M1		1	
	25-15085- 3	M1		1	
	25-15085- 4	M1		1	
	25-15085- 5	M1		2	
	25-15086- 1	M1		1	E-145
	25-15086- 2	M1		1	
	25-15086- 3	M1		1	
	25-15086- 4	M1		1	
	25-15086- 5	M1		1	
	25-15086- 6	M1		1	
	25-15086- 7	M1		1	
	25-15086- 8	M1		1	
	25-15086- 9	M1		1	
	25-15086- 10	M1		1	
	25-15086- 11	M1		1	
	25-15086- 12	M1		1	
	25-15086- 13	M1		1	
	25-15086- 14	M1		1	
	25-15086- 15	M1		1	
	25-15086- 16	M1		1	
	25-15086- 17	M1		1	
	25-15086- 18	M1		1	
	25-15086- 19	M1		1	
	25-15086- 20	M1		1	
	25-15086- 21	M1		1	
	25-15086- 22	M1		1	
	25-15086- 23	M1		1	
	25-15086- 24	M1		1	
	25-15086- 25	M1		1	
	25-15086- 26	M1		1	
	25-15086- 27	M1		1	
	25-15086- 28	M1		1	
	25-15086- 29	M1		1	
	25-15086- 30	M1		1	
	25-15087- 3	M1		1	C-361
	25-15087- 4	M1		1	
	25-15087- 5			1	
	25-15087- 6			1	
	25-15087- 7			2	
	25-15087- 9			2	
	25-15088- 7	*	4 - 6	3	C-362
	25-15088- 9			1	
	25-15088- 10	X1		1	
	25-15088- 11			4	
	25-15088- 13			2	
	25-15088- 14			2	
	25-15088- 17			1	
	25-15089- 3F			2	E-146
	25-15089- 4F	X1		2	
	25-15090- 3F	X1		2	E-147
	25-15090- 4F	X1		2	
	25-15091- 1	A	7 - 14	1	C-363
	25-15091- 2	A	7 - 14	1	
R82MDA-	25-15091- 3	P	7 - 16	2	
	25-15091- 7	M1	7 - 17	1	
	25-15091- 8	M1	7 - 17	1	
	25-15092- 3	M1		1	E-148
	25-15092- 4	M1		1	
	25-15092- 5			1	
	25-15092- 6			1	
	25-15092- 7			2	
	25-15093- 3	M1		1	C-364
	25-15093- 4	M1		1	
	25-15093- 5			1	
	25-15093- 6			1	
	25-15093- 7			2	
	25-15093- 9			2	
	25-15094- 3F	X1		4	E-149
	25-15095- 1			1	
	25-15095- 2			1	
	25-15095- 3			1	
	25-15095- 4			1	
	25-15095- 5			1	
	25-15095- 6			1	
	25-15095- 7			1	
	25-15095- 8			1	
	25-15096- 1	M1		1	E-150
	25-15096- 2	M1		1	
	25-15096- 5	M1		2	
	25-15096- 6	M1		2	
	25-15096- 7	M1		1	
	25-15096- 8	M1		1	
	25-15096- 9	M1		1	
	25-15096- 10	M1		1	
	25-15097- 3	M1		1	E-151
	25-15097- 4	M1		1	
	25-15097- 5	M1		2	
	25-15097- 7			1	
	25-15097- 8			1	
	25-15097- 9			2	
	25-15098- 1	M1	4 -	1	C-365
	25-15098- 2	M1	4 -	1	
	25-15098- 3	M1		1	
	25-15098- 4	M1		1	
	25-15098- 5	M1		4	
	25-15099- 3	M1		1	D-315
	25-15099- 4	M1		1	
	25-15099- 5	M1		1	
	25-15099- 6	M1		1	
	25-15099- 7			1	
	25-15099- 8			1	
	25-15099- 9			2	
	25-15100- 3	M1		1	D-316
	25-15100- 4	M1		1	
	25-15100- 5			1	
	25-15100- 6			1	
	25-15101- 3	M1		1	D-317
	25-15101- 4	M1		1	
	25-15101- 5			1	
	25-15101- 6			1	
	25-15102- 1	M1	5 -	1	E-152
	25-15102- 3	M1	5 -	1	
	25-15102- 5	M1		1	
	25-15102- 7	M1		1	
	25-15102- 9	M1		1	
	25-15102- 10	M1		1	
	25-15102- 11	M1		1	
	25-15102- 12	M1		1	
	25-15102- 13	M1		1	
	25-15102- 14	M1		1	
	25-15102- 17	M1		1	
	25-15102- 19	M1		1	
	25-15102- 21	M1		1	
	25-15102- 22	M1		1	
	25-15102- 23	M1		1	
	25-15102- 24	M1		1	
	25-15102- 27	M1		1	
	25-15102- 28	M1		1	
	25-15102- 31	M1		1	
	25-15102- 32	M1		1	
	25-15102- 33	M1		1	
	25-15102- 34	M1		1	
	25-15102- 37	M1		1	
	25-15102- 38	M1		1	
	25-15102- 39	M1		1	
	25-15102- 40	M1		1	
	25-15102- 41	M1		1	
	25-15102- 42	M1		1	
	25-15102- 45	M1		1	
	25-15102- 46	M1		1	
	25-15102- 47	M1	5 - 2	1	
	25-15102- 48	M1	5 - 2	1	
	25-15102- 49	M	5 - 3	2	
	25-15102- 53			2	
	25-15102- 55	M1		2	
	25-15102- 57	M1		1	
	25-15102- 58	M1		1	
	25-15102- 59	M1		2	
	25-15102- 61	M1		1	
	25-15102- 62	M1		1	
	25-15102- 63	M1		1	
	25-15102- 64	M1		1	
	25-15102- 65	M1		1	
	25-15102- 66	M1		1	
	25-15102- 67	M1		1	
	25-15102- 68	M1		1	
	25-15102- 69	M1		2	
	25-15102- 71	M1		2	
	25-15102- 73	M1		1	
	25-15102- 74	M1		1	
	25-15102- 75	M1		1	

STOCK	PART NUMBER	SOURCE CODE	FIGURE & INDEX NO.	QTY. PER A/C	MICROFILM INDEX
	25-15102- 76	M1		1	
	25-15102- 77	M1		1	
	25-15102- 78	M1		1	
	25-15102- 79	M1		1	
	25-15102- 80	M1		1	
	25-15102- 81	M1		1	
	25-15102- 82	M1		1	
	25-15102- 83	M1		1	
	25-15102- 85	M1		1	
	25-15102- 86	M1		1	
	25-15102- 87	M1		1	
	25-15102- 89	M1		1	
	25-15102- 91	M1		1	
	25-15102- 93	M1		1	
	25-15102- 94	M1		1	
	25-15102- 95	M1		1	
	25-15102- 97	M1		1	
	25-15102- 99	M1		1	
	25-15102-103			2	
	25-15102-104			2	
	25-15102-301	M1	5 -	1	
	25-15102-303	M1	5 -	1	
	25-15103- 3F	X1		1	E-153
	25-15103- 4F	X1		1	
	25-15104- 5	X1	4 - 8	4	C-366
	25-15104- 7	X1		1	
	25-15104- 8	X1		1	
	25-15104- 9			2	
	25-15104- 11			1	
	25-15104- 12			1	
	25-15105- 3	X1		1	E-154
	25-15105- 4	X1		2	
	25-15106- 3	M1		1	D-318
	25-15106- 4	M1		1	
	25-15107- 3	M1		1	D-319
	25-15107- 4	M1		1	
	25-15108- 1	M1		1	D-320
	25-15108- 2	M1		1	
	25-15108- 3	M1		1	
	25-15108- 4	M1		1	
	25-15108- 5	M1		2	
	25-15108- 7	M1		2	
	25-15108- 9	M1		2	
	25-15108- 11	M1		1	
	25-15108- 12	M1		1	
	25-15108- 13	M1		1	
	25-15108- 14	M1		1	
	25-15109- 1	M1		1	E-155
	25-15109- 2	M1		1	
	25-15109- 3	M1		1	
	25-15109- 4	M1		1	
	25-15109- 5	M1		1	
	25-15109- 6	M1		1	
	25-15110- 1	X1	4 -	1	E-156
	25-15110- 2	X1	4 -	1	
	25-15110- 3	M1		2	
	25-15110- 5	M1		1	
	25-15110- 6	M1		1	
	25-15110- 7	M1		1	
	25-15110- 8	M1		1	
	25-15110- 9	M1		2	
	25-15110- 11	M1		2	
	25-15111- 1	X1	4 -	1	E-157
	25-15111- 2	X1	4 -	1	
	25-15111- 3	X2	4 - 6	1	
	25-15111- 4	X2	4 - 6	1	
	25-15111- 5	M1		1	
	25-15111- 6	M1		1	
	25-15111- 7	M1		1	
	25-15111- 8	M1		1	
	25-15111- 9	M1		1	
	25-15111- 10	M1		1	
	25-15111- 11	M1		1	
	25-15111- 12	M1		1	
	25-15111- 13	M1		1	
	25-15111- 14	M1		1	
	25-15111- 15	M1		1	
	25-15111- 16	M1		1	
	25-15111- 17			1	
	25-15111- 18			1	
	25-15111- 19			1	
	25-15111- 20			1	
	25-15111- 21			1	
	25-15111- 22			1	
	25-15111- 23			1	
	25-15111- 24			1	
	25-15111- 25			1	
	25-15111- 26			1	
	25-15111- 27			1	
	25-15111- 28			1	
	25-15111- 29			2	
	25-15111-301			1	
	25-15111-302			1	
	25-15112- 1	M1	4 - 7	2	C-367
	25-15112- 3	M1		2	
	25-15112- 5	M1	4 -	2	

STOCK	PART NUMBER	SOURCE CODE	FIGURE & INDEX NO.	QTY. PER A/C	MICROFILM INDEX
	25-15113- 1		5 -	1	E-158
	25-15113- 2	*	5 -	1	
	25-15113- 3	M1	5 - 26	2	
	25-15113- 4	M1	5 - 26	2	
	25-15113- 5	M1	5 - 30	1	
	25-15113- 6	M1	5 - 30	1	
	25-15113- 7	M1		2	
	25-15113- 9	M1		1	
	25-15113- 10	M1		1	
	25-15113- 11	M1		2	
	25-15113- 12	M1		2	
	25-15113- 13	M1		1	
	25-15113- 14	M1		1	
	25-15113- 15	M1		1	
	25-15113- 16	M1		1	
	25-15113- 17	M1		1	
	25-15113- 18	M1		1	
	25-15113- 19	M1		1	
	25-15113- 20	M1		1	
	25-15113- 21	M1		1	
	25-15113- 22	M1		1	
	25-15113- 23	M	5 - 28	1	
	25-15113- 24	M	5 - 28	1	
	25-15113- 25	M	5 - 27	1	
	25-15113- 26	M	5 - 27	1	
	25-15113- 27	M1		2	
	25-15113- 29	M1		2	
	25-15113- 31	M1		1	
	25-15113- 32	M1		1	
	25-15113- 33	M1		1	
	25-15113- 34	M1		1	
	25-15113- 35	M1		1	
	25-15113- 36	M1		1	
	25-15113- 37	M1		1	
	25-15113- 38	M1		1	
	25-15113- 39	M1		1	
	25-15113- 40	M1		1	
	25-15113- 43	M1		2	
	25-15113- 45	M1		2	
	25-15113- 47	M1		1	
	25-15113- 48	M1		1	
	25-15113- 49	M1		1	
	25-15113- 50	M1		1	
	25-15113- 51	M1		1	
	25-15113- 52	M1		1	
	25-15113- 53	M1		1	
	25-15113- 54	M1		1	
	25-15113- 55	M1		1	
	25-15113- 56	M1		1	
	25-15113- 57	M1		1	
	25-15113- 58	M1		1	
	25-15113- 59	M1		1	
	25-15113- 60	M1		1	
	25-15113- 63	M1		2	
	25-15113- 64	M1		2	
	25-15113- 65	M1		1	
	25-15113- 66	M1		1	
	25-15113- 67	M1		1	
	25-15113- 68	M1		1	
	25-15113- 69	M1		2	
	25-15113- 71	M1		2	
	25-15113- 73	M1		1	
	25-15113- 74	M1		1	
	25-15113- 75	M1		1	
	25-15113- 76	M1		1	
	25-15113- 77	M1		1	
	25-15113- 78	M1		1	
	25-15113- 79	M1	5 - 29	2	
	25-15113- 85			3	
	25-15113- 86			3	
	25-15113- 87			3	
	25-15113- 88			3	
	25-15113- 89			3	
	25-15113- 90			3	
	25-15113- 91			2	
	25-15113- 92			2	
	25-15113- 93			2	
	25-15113- 94			2	
	25-15113- 95		5 - 26	2	
	25-15113- 96		5 - 26	2	
	25-15113-301		5 -	1	
	25-15113-302		5 -	1	
	25-15114- 1	M1	4 -	1	XA-165
	25-15114- 2	M1	4 -	1	
	25-15114- 3	P1	4 - 8	3	
	25-15114- 4	X2	4 - 8	3	
	25-15114- 5	M1		1	
	25-15114- 6	M1		1	
	25-15114- 7	M1		1	
	25-15114- 8	M1		1	
	25-15114- 9	M1		2	
	25-15114- 11	M1		2	
	25-15114- 27	M1		1	
	25-15114- 28	M1		1	
	25-15114- 29	M1		1	
	25-15114- 30	M1		1	

STOCK	PART NUMBER	SOURCE CODE	FIGURE & INDEX NO.	QTY. PER A/C	MICROFILM INDEX
	25-15114- 31	M1		1	
	25-15114- 32	M1		1	
	25-15114- 35	M1		1	
	25-15114- 36	M1		1	
	25-15114- 37	M1		1	
	25-15114- 38	M1		1	
	25-15114- 39	M1		1	
	25-15114- 40	M1		1	
	25-15114- 41	M1		1	
	25-15114- 42	M1		1	
	25-15114- 43	M1		1	
	25-15114- 44	M1		1	
	25-15114- 45	M1		2	
	25-15114- 46	M1		2	
	25-15115- 1	M1	5 -	2	B-393
	25-15115- 3	M1		2	
	25-15115- 5		5 - 5	2	
	25-15115- 7	M1		2	
	25-15115- 9	M1	5 - 6	2	
	25-15115- 11	M		2	
	25-15116- 3	M1		12	A-197
R82MDA-	25-15118- 3		2 - 9	4	A-199
	25-15119- 1			1	
	25-15119- 2			1	
	25-15119- 3			1	
	25-15119- 4			1	
	25-15119- 5			1	
	25-15119- 6			1	
	25-15119- 7			1	
	25-15119- 8			1	
	25-15119- 9			1	
	25-15119- 10			1	
	25-15120- 1			1	
	25-15120- 2			1	
	25-15120- 3			1	
	25-15120- 4			1	
	25-15120- 5			1	
	25-15120- 6			1	
	25-15120- 7			1	
	25-15120- 8			1	
	25-15120- 9			1	
	25-15120- 10			1	
	25-15122- 3	M1	5 - 49	1	A-200
	25-15122- 4	M1	5 - 49	1	
	25-15122- 5	M1	5 - 19	1	
	25-15122- 6	M1	5 - 19	1	
	25-15122- 7	M1		1	
	25-15122- 8	M1		1	
	25-15122- 9	M1		1	
	25-15122- 10	M1		1	
	25-15123- 3	M1	5 - 48	1	A-201
	25-15123- 4	M1	5 - 48	1	
	25-15123- 5	M1	5 - 18	1	
	25-15123- 6	M1	5 - 18	1	
	25-15123- 7	M1		1	
	25-15123- 8	M1		1	
	25-15123- 9	M1		1	
	25-15123- 10	M1		1	
	25-15124- 1			1	
	25-15124- 2			1	
	25-15124- 3			1	
	25-15124- 4			1	
	25-15124- 5			1	
	25-15124- 6			1	
	25-15124- 7			1	
	25-15124- 8			1	
	25-15124- 9			1	
	25-15124- 10			1	
	25-15135- 1			1	
	25-15135- 2			1	
	25-15135- 3			1	
	25-15135- 4			1	
	25-15135- 5			1	
	25-15135- 6			1	
	25-15135- 7			1	
	25-15135- 8			1	
	25-15135- 9			1	
	25-15135- 10			1	
	25-15136- 1			1	
	25-15136- 2			1	
	25-15136- 3			1	
	25-15136- 4			1	
	25-15136- 5			1	
	25-15136- 6			1	
	25-15136- 7			1	
	25-15136- 8			1	
	25-15136- 9			1	
	25-15136- 10			1	
	25-15138- 1			1	
	25-15138- 2			1	
	25-15138- 3			1	
	25-15138- 4			1	
	25-15138- 5			1	
	25-15138- 6			1	
	25-15138- 7			1	
	25-15138- 8			1	

STOCK	PART NUMBER	SOURCE CODE	FIGURE & INDEX NO.	QTY. PER A/C	MICROFILM INDEX
	25-15138- 9			1	
	25-15138- 10			1	
	25-15139- 3	M1		1	
	25-15139- 4	M1		1	
	25-15140- 3	M1	5 - 53	1	
	25-15140- 3C	M1		1	
	25-15140- 4	M1	5 - 53	1	
	25-15140- 4C	M1		1	
	25-15141- 3	M1		1	
	25-15141- 3C	M1		1	
	25-15141- 4	M1		1	
	25-15141- 4C	M1		1	
	25-15142- 3			2	
	25-15143- 1			1	
	25-15143- 2			1	
	25-15143- 3			1	
	25-15143- 4			1	
	25-15143- 5			1	
	25-15143- 6			1	
	25-15143- 7			1	
	25-15143- 8			1	
	25-15143- 9			1	
	25-15143- 10			1	
	25-15143- 11			1	
	25-15143- 12			1	
	25-15144- 1			1	
	25-15144- 2			1	
	25-15144- 3			1	
	25-15144- 4			1	
	25-15144- 5			1	
	25-15144- 6			1	
	25-15144- 7			1	
	25-15144- 8			1	
	25-15144- 9			1	
	25-15144- 10			1	
	25-15144- 11			1	
	25-15144- 12			1	
	25-15144- 13			1	
	25-15144- 14			1	
	25-15144- 15			1	
	25-15144- 16			1	
	25-15144- 17			1	
	25-15144- 18			1	
	25-15144- 19			1	
	25-15144- 20			1	
	25-15145- 1			1	
	25-15145- 2			1	
	25-15145- 3			1	
	25-15145- 4			1	
	25-15145- 5			1	
	25-15145- 6			1	
	25-15145- 7			1	
	25-15145- 8			1	
	25-15145- 9			1	
	25-15145- 10			1	
	25-15145- 11			1	
	25-15145- 12			1	
	25-15145- 13			1	
	25-15145- 14			1	
	25-15145- 15			1	
	25-15145- 16			1	
	25-15146- 1			1	
	25-15146- 2			1	
	25-15146- 3			1	
	25-15146- 4			1	
	25-15146- 5			1	
	25-15146- 6			1	
	25-15146- 7			1	
	25-15146- 8			1	
	25-15147- 1			1	
	25-15147- 2			1	
	25-15147- 3			1	
	25-15147- 4			1	
	25-15147- 5			1	
	25-15147- 6			1	
	25-15147- 7			1	
	25-15147- 8			1	
	25-15147- 9			1	
	25-15147- 10			1	
	25-15147- 11			1	
	25-15147- 12			1	
	25-15147- 13			1	
	25-15147- 14			1	
	25-15147- 15			1	
	25-15147- 16			1	
	25-15148- 1			1	
	25-15148- 2			1	
	25-15148- 3			1	
	25-15148- 4			1	
	25-15148- 5			1	
	25-15148- 6			1	
	25-15148- 7			1	
	25-15148- 8			1	
	25-15148- 9			1	
	25-15148- 10			1	
	25-15148- 13			1	

STOCK	PART NUMBER	SOURCE CODE	FIGURE & INDEX NO.	QTY. PER A/C	MICROFILM INDEX
	25-15148- 14			1	
	25-15148- 15			1	
	25-15148- 16			1	
	25-15149- 1			1	
	25-15149- 2			1	
	25-15149- 3			1	
	25-15149- 4			1	
	25-15149- 5			1	
	25-15149- 6			1	
	25-15149- 7			1	
	25-15149- 8			1	
	25-15149- 9			1	
	25-15149- 10			1	
	25-15149- 11			1	
	25-15149- 12			1	
	25-15149- 13			2	
	25-15149- 15			2	
	25-15150- 1			1	
	25-15150- 2			1	
	25-15150- 5			1	
	25-15150- 6			1	
	25-15150- 7			1	
	25-15150- 8			1	
	25-15150- 9			1	
	25-15150- 10			1	
	25-15150- 11			1	
	25-15150- 12			1	
	25-15150- 13			1	
	25-15150- 14			1	
	25-15151- 1			1	
	25-15151- 2			1	
	25-15151- 3			1	
	25-15151- 4			1	
	25-15151- 5			1	
	25-15151- 6			1	
	25-15151- 7			1	
	25-15151- 8			1	
	25-15152- 1			1	
	25-15152- 2			1	
	25-15152- 3			1	
	25-15152- 4			1	
	25-15152- 5			1	
	25-15152- 6			1	
	25-15152- 7			1	
	25-15152- 8			1	
	25-15152- 9			1	
	25-15152- 10			1	
	25-15152- 11			1	
	25-15152- 12			1	
	25-15153- 1			1	
	25-15153- 2			1	
	25-15153- 7			1	
	25-15153- 8			1	
	25-15153- 10				
	25-15153- 11			1	
	25-15153- 12			1	
	25-15153- 13			1	
	25-15153- 14			1	
	25-15153- 15			1	
	25-15153- 16			1	
	25-15153- 17			1	
	25-15153- 18			1	
	25-15154- 1			1	
	25-15154- 2			1	
	25-15154- 3			1	
	25-15154- 4			1	
	25-15154- 5			1	
	25-15154- 6			1	
	25-15154- 7			1	
	25-15154- 8			1	
	25-15154- 9			1	
	25-15154- 10			1	
	25-15154- 11			1	
	25-15154- 12			1	
	25-15154- 13			1	
	25-15154- 14			1	
	25-15154- 15			2	
	25-15154- 16			2	
	25-15155- 1			1	
	25-15155- 2			1	
	25-15155- 3			1	
	25-15155- 4			1	
	25-15155- 5			1	
	25-15155- 6			1	
	25-15155- 7			1	
	25-15155- 8			1	
	25-15155- 9			1	
	25-15155- 10			1	
	25-15155- 11			1	
	25-15155- 12			1	
	25-15155- 13			1	
	25-15155- 14			1	
	25-15155- 15			1	
	25-15155- 16			1	
	25-15155- 17			1	
	25-15155- 18			1	

STOCK	PART NUMBER	SOURCE CODE	FIGURE & INDEX NO.	QTY. PER A/C	MICROFILM INDEX
	25-15155- 19			1	
	25-15155- 20			1	
	25-15155- 21			2	
	25-15155- 23			1	
	25-15155- 24			1	
	25-15155- 25			1	
	25-15155- 26			1	
	25-15155- 27			1	
	25-15155- 28			1	
	25-15155- 29			1	
	25-15155- 30			1	
	25-15155- 31			1	
	25-15155- 32			1	
	25-15155- 33			1	
	25-15155- 34			1	
	25-15155- 35			1	
	25-15155- 36			1	
	25-15155- 37			2	
	25-15155- 39			2	
	25-15155- 41			6	
	25-15155- 43			4	
	25-15155- 45			4	
	25-15155- 47			2	
	25-15155- 49			2	
	25-15156- 1			1	
	25-15156- 2			1	
	25-15156- 3			1	
	25-15156- 4			1	
	25-15156- 5			1	
	25-15156- 6			1	
	25-15156- 7			1	
	25-15156- 8			1	
	25-15156- 9			1	
	25-15156- 10			1	
	25-15156- 11			1	
	25-15156- 12			1	
	25-15156- 13			1	
	25-15156- 14			1	
	25-15156- 15			1	
	25-15156- 16			1	
	25-15156- 17			1	
	25-15156- 18			1	
	25-15156- 19			1	
	25-15156- 20			1	
	25-15156- 21			1	
	25-15156- 22			1	
	25-15156- 23			1	
	25-15156- 24			1	
	25-15156- 25			1	
	25-15156- 26			1	
	25-15156- 27			1	
	25-15156- 28			1	
	25-15156- 29			1	
	25-15156- 30			1	
	25-15156- 31			4	
	25-15156- 33			2	
	25-15156- 35			4	
	25-15156- 37			10	
	25-15156- 39			2	
	25-15156- 41			2	
	25-15156- 43			2	
	25-15156- 45			1	
	25-15156- 46			1	
	25-15157- 1			1	
	25-15157- 2			1	
	25-15157- 3			1	
	25-15157- 4			1	
	25-15157- 5			1	
	25-15157- 6			1	
	25-15157- 7			1	
	25-15157- 8			1	
	25-15157- 9			1	
	25-15157- 10			1	
	25-15157- 11			1	
	25-15157- 12			1	
	25-15157- 13			1	
	25-15157- 14			1	
	25-15157- 15			1	
	25-15157- 16			1	
	25-15157- 17			1	
	25-15157- 18			1	
	25-15157- 19			1	
	25-15157- 20			1	
	25-15157- 21			1	
	25-15157- 22			1	
	25-15157- 23			1	
	25-15157- 24			1	
	25-15157- 25			1	
	25-15157- 26			1	
	25-15157- 27			1	
	25-15157- 28			1	
	25-15157- 29			1	
	25-15157- 30			1	
	25-15157- 31			1	
	25-15157- 32			1	
	25-15157- 33			1	

STOCK	PART NUMBER	SOURCE CODE	FIGURE & INDEX NO.	QTY. PER A/C	MICROFILM INDEX
	25-15157- 34			1	
	25-15157- 35			1	
	25-15157- 36			1	
	25-15157- 37			2	
	25-15157- 39			2	
	25-15157- 41			2	
	25-15157- 43			2	
	25-15157- 45			2	
	25-15157- 47			6	
	25-15157- 49			4	
	25-15158- 3F			1	
	25-15158- 4F			1	
	25-15159- 3			1	
	25-15159- 4			1	
	25-15160- 3			1	
	25-15160- 4			1	
	25-15161- 3			1	
	25-15161- 4			1	
	25-15162- 1			4	
	25-15162-1-3			4	
	25-15162-1-3F			4	
	25-15163- 3			1	
	25-15163- 4			1	
	25-15163- 5			1	
	25-15163- 6			1	
	25-15163- 7			1	
	25-15163- 8			1	
	25-15164- 1			1	
	25-15164- 2			1	
	25-15164- 3			1	
	25-15164- 4			1	
	25-15164- 5			1	
	25-15164- 6			1	
	25-15165- 1			1	
	25-15165- 2			1	
	25-15165- 3			2	
	25-15165- 5			2	
	25-15165- 7			2	
	25-15165- 9			4	
	25-15165- 11			4	
	25-15165- 13			4	
	25-15165- 15			2	
	25-15165- 17			2	
	25-15165- 19			2	
	25-15165- 21			2	
	25-15165- 23			2	
	25-15166- 1			1	
	25-15166- 2			1	
	25-15166- 3			2	
	25-15166- 5			2	
	25-15166- 7			2	
	25-15166- 9			2	
	25-15166- 11			2	
	25-15166- 13			2	
	25-15166- 15			2	
	25-15167- 1			1	
	25-15167- 2			1	
	25-15167- 3			1	
	25-15167- 4			1	
	25-15167- 5			1	
	25-15167- 6			1	
	25-15167- 7			1	
	25-15167- 8			1	
	25-15167- 9			1	
	25-15167- 10			1	
	25-15167- 11			1	
	25-15167- 12			1	
	25-15167- 13			1	
	25-15167- 14			1	
	25-15167- 15			1	
	25-15167- 16			1	
	25-15167- 17			1	
	25-15167- 18			1	
	25-15167- 19			4	
	25-15168- 1			1	
	25-15168- 2			1	
	25-15168- 3			1	
	25-15168- 4			1	
	25-15168- 5			1	
	25-15168- 6			1	
	25-15169- 1			1	
	25-15169- 2			1	
	25-15169- 3			1	
	25-15169- 4			1	
	25-15169- 5			1	
	25-15169- 6			1	
	25-15169- 7			2	
	25-15169- 9			2	
	25-15169- 11			2	
	25-15169- 13			1	
	25-15169- 14			1	
	25-15169- 15			1	
	25-15169- 16			1	
	25-15169- 17			1	
	25-15169- 18			1	
	25-15169- 19			1	

STOCK	PART NUMBER	SOURCE CODE	FIGURE & INDEX NO.	QTY. PER A/C	MICROFILM INDEX
	25-15169- 20			1	
	25-15169- 21			1	
	25-15169- 22			1	
	25-15169- 23			2	
	25-15170- 1			1	
	25-15170- 2			1	
	25-15170- 3			1	
	25-15170- 4			1	
	25-15170- 5			1	
	25-15170- 6			1	
	25-15170- 7			2	
	25-15170- 8			2	
	25-15170- 9			1	
	25-15170- 10			1	
	25-15170- 11			1	
	25-15170- 12			1	
	25-15170- 13			1	
	25-15170- 14			1	
	25-15170- 15			1	
	25-15170- 16			1	
	25-15170- 17			1	
	25-15170- 18			1	
	25-15170- 19			2	
	25-15170- 21			2	
	25-15170- 23			2	
	25-15170- 25			2	
	25-15171- 1			1	
	25-15171- 2			1	
	25-15171- 3			1	
	25-15171- 4			1	
	25-15171- 5			1	
	25-15171- 6			1	
	25-15172- 1			1	
	25-15172- 2			1	
	25-15172- 3			1	
	25-15172- 4			1	
	25-15172- 5			1	
	25-15172- 6			1	
	25-15172- 7			1	
	25-15172- 8			1	
	25-15173- 1			1	
	25-15173- 2			1	
	25-15173- 3			1	
	25-15173- 4			1	
	25-15173- 5			2	
	25-15173- 6			1	
	25-15173- 7			2	
	25-15173- 9			1	
	25-15173- 10			2	
	25-15173- 11			2	
	25-15173- 13			2	
	25-15173- 15			2	
	25-15174- 1			1	
	25-15174- 2			1	
	25-15174- 3			2	
	25-15174- 5			1	
	25-15174- 6			1	
	25-15174- 7			1	
	25-15174- 8			1	
	25-15174- 9			2	
	25-15174- 10			2	
	25-15174- 11			1	
	25-15174- 12			1	
	25-15174- 13			1	
	25-15174- 14			1	
	25-15174- 15			1	
	25-15174- 16			1	
	25-15174- 17			2	
	25-15174- 19			2	
	25-15174- 21			2	
	25-15174- 23			2	
	25-15174- 25			2	
	25-15174- 27			2	
	25-15174- 29			2	
	25-15174- 31			2	
	25-15174- 33			2	
	25-15174- 35			2	
	25-15175- 1			1	
	25-15175- 2			1	
	25-15175- 3			1	
	25-15175- 4			1	
	25-15175- 5			1	
	25-15175- 6			1	
	25-15175- 7			2	
	25-15175- 9			2	
	25-15175- 11			2	
	25-15175- 13			4	
	25-15175- 15			2	
	25-15175- 17			2	
	25-15176- 1			1	
	25-15176- 2			1	
	25-15176- 3			2	
	25-15176- 5			1	
	25-15176- 6			1	
	25-15176- 7			1	
	25-15176- 8			1	

STOCK	PART NUMBER	SOURCE CODE	FIGURE & INDEX NO.	QTY. PER A/C	MICROFILM INDEX
	25-15176- 9			2	
	25-15176- 10			2	
	25-15176- 11			1	
	25-15176- 12			1	
	25-15176- 13			1	
	25-15176- 14			1	
	25-15176- 15			1	
	25-15176- 16			1	
	25-15176- 17			2	
	25-15176- 19			2	
	25-15176- 21			2	
	25-15176- 23			2	
	25-15176- 25			2	
	25-15176- 27			2	
	25-15176- 29			2	
	25-15176- 31			2	
	25-15176- 33			2	
	25-15177- 1			1	
	25-15177- 2			1	
	25-15177- 3			1	
	25-15177- 4			1	
	25-15177- 5			1	
	25-15177- 6			1	
	25-15177- 7			1	
	25-15177- 8			1	
	25-15177- 9			1	
	25-15177- 10			1	
	25-15177- 11			1	
	25-15177- 12			1	
	25-15177- 13			1	
	25-15177- 14			1	
	25-15177- 15			2	
	25-15177- 17			2	
	25-15177- 19			2	
	25-15177- 21			1	
	25-15177- 22			1	
	25-15177- 23			2	
	25-15177- 25			2	
	25-15177- 27			1	
	25-15177- 28			1	
	25-15177- 29			1	
	25-15177- 30			1	
	25-15177- 31			1	
	25-15177- 32			1	
	25-15177- 33			1	
	25-15177- 34			1	
	25-15177- 35			1	
	25-15177- 36			1	
	25-15177- 37			1	
	25-15177- 38			1	
	25-15177- 39			1	
	25-15177- 40			1	
	25-15178- 1			1	
	25-15178- 2			1	
	25-15178- 3			1	
	25-15178- 4			1	
	25-15178- 5			1	
	25-15178- 6			1	
	25-15178- 7			2	
	25-15178- 9			2	
	25-15178- 11			1	
	25-15178- 12			1	
	25-15178- 13			1	
	25-15178- 14			1	
	25-15178- 15			1	
	25-15178- 16			1	
	25-15178- 17			1	
	25-15178- 18			1	
	25-15178- 19			1	
	25-15178- 20			1	
	25-15178- 21			1	
	25-15178- 22			1	
	25-15178- 23			1	
	25-15178- 24			1	
	25-15178- 25			1	
	25-15178- 26			1	
	25-15178- 29			2	
	25-15178- 31			2	
	25-15178- 33			4	
	25-15179- 1			1	
	25-15179- 2			1	
	25-15179- 3			1	
	25-15179- 4			1	
	25-15179- 5			1	
	25-15179- 6			1	
	25-15179- 7			2	
	25-15179- 8			2	
	25-15179- 9			1	
	25-15179- 10			1	
	25-15179- 11			1	
	25-15179- 12			1	
	25-15179- 13			1	
	25-15179- 14			1	
	25-15179- 15			1	
	25-15179- 16			1	
	25-15179- 17			1	
	25-15179- 18			1	
	25-15179- 19			2	
	25-15179- 21			2	
	25-15179- 23			2	
	25-15179- 25			2	
	25-15180- 1			1	
	25-15180- 2			1	
	25-15180- 3			1	
	25-15180- 4			1	
	25-15180- 5			1	
	25-15180- 6			1	
	25-15180- 7			1	
	25-15180- 8			1	
	25-15180- 9			2	
	25-15180- 11			2	
	25-15180- 13			1	
	25-15180- 14			1	
	25-15180- 15			1	
	25-15180- 16			1	
	25-15181- 3			1	
	25-15181- 3C			1	
	25-15181- 4			1	
	25-15181- 4C			1	
	25-15182- 1			1	
	25-15182- 2			1	
	25-15182- 3			1	
	25-15182- 4			1	
	25-15182- 5			1	
	25-15182- 6			1	
	25-15182- 7			1	
	25-15182- 8			1	
	25-15182- 9			1	
	25-15182- 10			1	
	25-15182- 11			1	
	25-15182- 12			1	
	25-15182- 13			1	
	25-15182- 14			1	
	25-15182- 15			4	
	25-15182- 17			2	
	25-15182- 19			2	
	25-15182- 21			2	
	25-15182- 23			2	
	25-15182- 25			4	
	25-15182- 27			4	
	25-15182- 29			2	
	25-15182- 31			2	
	25-15183- 3			1	
	25-15183- 3C			1	
	25-15183- 4			1	
	25-15183- 4C			1	
	25-15184- 3			1	
	25-15184- 4			1	
	25-15185- 3			1	
	25-15185- 4			1	
	25-15186- 7			1	
	25-15186- 8			1	
	25-15186- 9			1	
	25-15186- 10			1	
	25-15186- 11			1	
	25-15186- 12			1	
	25-15186- 15			1	
	25-15186- 16			1	
	25-15186- 17			1	
	25-15186- 18			1	
	25-15186- 19			1	
	25-15186- 20			1	
	25-15187- 1			1	
	25-15187- 2			1	
	25-15187- 3			1	
	25-15187- 4			1	
	25-15187- 7			1	
	25-15187- 8			1	
	25-15187- 9			1	
	25-15187- 10			1	
	25-15187- 13			1	
	25-15187- 14			1	
	25-15187- 15			1	
	25-15187- 16			1	
	25-15187- 17			1	
	25-15187- 18			1	
	25-15187- 19			2	
	25-15187- 21			1	
	25-15187- 22			1	
	25-15187- 23			1	
	25-15187- 24			1	
	25-15187- 25			1	
	25-15187- 26			1	
	25-15187- 29			2	
	25-15187- 31			1	
	25-15187- 32			1	
	25-15187- 33			1	
	25-15187- 34			1	
	25-15187- 35			1	
	25-15187- 36			1	
	25-15188- 3			1	
	25-15188- 3C			1	

STOCK	PART NUMBER	SOURCE CODE	FIGURE & INDEX NO.	QTY. PER A/C	MICROFILM INDEX
	25-15188- 4			1	
	25-15188- 4C			1	
	25-15189- 3			1	
	25-15189- 4			1	
	25-15190- 3			2	
	25-15190- 3F			2	
	25-15190- 4			2	
	25-15190- 4F			2	
	25-15191- 3			1	
	25-15191- 4			1	
	25-15192- 3			1	
	25-15192- 4			1	
	25-15193- 3			1	
	25-15193- 4			1	
	25-15194- 3			1	
	25-15194- 4			1	
	25-15195- 1			1	
	25-15195- 2			1	
	25-15195- 3			1	
	25-15195- 4			1	
	25-15195- 5			1	
	25-15195- 6			1	
	25-15195- 7			1	
	25-15195- 8			1	
	25-15195- 9			1	
	25-15195- 10			1	
	25-15195- 11			2	
	25-15195- 13			2	
	25-15196- 1			1	
	25-15196- 2			1	
	25-15196- 3			2	
	25-15196- 4			2	
	25-15196- 5			2	
	25-15196- 6			2	
	25-15198- 1			1	
	25-15198- 2			1	
	25-15198- 3			1	
	25-15198- 4			1	
	25-15198- 5			1	
	25-15198- 6			1	
	25-15198- 7			1	
	25-15198- 8			1	
	25-15198- 9			1	
	25-15198- 10			1	
	25-15198- 11			1	
	25-15198- 12			1	
	25-15198- 13			1	
	25-15198- 14			1	
	25-15198- 15			1	
	25-15198- 16			1	
	25-15198- 17			1	
	25-15198- 18			1	
	25-15198- 19			1	
	25-15198- 20			1	
	25-15198- 21			1	
	25-15198- 22			1	
	25-15198- 23			1	
	25-15198- 24			1	
	25-15198- 25			1	
	25-15198- 26			1	
	25-15198- 27			2	
	25-15198- 29			2	
	25-15198- 31			1	
	25-15198- 32			1	
	25-15199- 1			1	
	25-15199- 2			1	
	25-15199- 23			1	
	25-15199- 24			1	
	25-15199- 25			1	
	25-15199- 26			1	
	25-15199- 27			1	
	25-15199- 28			1	
	25-15199- 29			1	
	25-15199- 30			1	
	25-15199- 31			1	
	25-15199- 32			1	
	25-15199- 33			1	
	25-15199- 34			1	
	25-15199- 35			1	
	25-15199- 36			1	
	25-15199- 37			1	
	25-15199- 38			1	
	25-15199- 39			1	
	25-15199- 40			1	
	25-15199- 41			1	
	25-15199- 42			1	
	25-15199- 43			1	
	25-15199- 44			1	
	25-15199- 45			2	
	25-15199- 46			2	
	25-15199- 47			1	
	25-15199- 48			1	
	25-15199- 49			2	
	25-15199- 51			2	
	25-15200- 1			1	
	25-15200- 2			1	

STOCK	PART NUMBER	SOURCE CODE	FIGURE & INDEX NO.	QTY. PER A/C	MICROFILM INDEX
	25-15201- 1			1	
	25-15201- 2			1	
	25-15201- 3			1	
	25-15201- 4			1	
	25-15202- 1			1	
	25-15202- 2			1	
	25-15202- 3			1	
	25-15202- 4			1	
	25-15202- 5			1	
	25-15202- 6			1	
	25-15202- 7			1	
	25-15202- 8			1	
	25-15202- 9			1	
	25-15202- 10			1	
	25-15202- 11			1	
	25-15202- 12			1	
	25-15202- 13			1	
	25-15202- 14			1	
	25-15202- 15			1	
	25-15202- 16			1	
	25-15202- 17			1	
	25-15202- 18			1	
	25-15202- 19			1	
	25-15202- 20			1	
	25-15202- 21			1	
	25-15202- 22			1	
	25-15202- 23			1	
	25-15202- 24			1	
	25-15202- 25			1	
	25-15202- 26			1	
	25-15202- 27			1	
	25-15202- 28			1	
	25-15202- 29			1	
	25-15202- 30			1	
	25-15202- 31			1	
	25-15202- 32			1	
	25-15202- 33			2	
	25-15202- 35			2	
	25-15202- 37			1	
	25-15202- 38			1	
	25-15202- 39			1	
	25-15202- 40			1	
	25-15202- 41			1	
	25-15202- 42			1	
	25-15202- 43			1	
	25-15202- 44			1	
	25-15202- 45			1	
	25-15202- 46			1	
	25-15202- 47			1	
	25-15202- 48			1	
	25-15202- 49			1	
	25-15202- 50			1	
	25-15202- 51			1	
	25-15202- 52			1	
	25-15202- 53			1	
	25-15202- 54			1	
	25-15202- 55			1	
	25-15202- 56			1	
	25-15202- 57			1	
	25-15202- 58			1	
	25-15202- 59			1	
	25-15202- 60			1	
	25-15202- 61			1	
	25-15202- 62			1	
	25-15202- 63			1	
	25-15202- 64			1	
	25-15202- 65			1	
	25-15202- 66			1	
	25-15202- 67			1	
	25-15202- 68			1	
	25-15202- 69			1	
	25-15202- 70			1	
	25-15202- 71			1	
	25-15202- 72			1	
	25-15202- 73			1	
	25-15202- 74			1	
	25-15202- 75			1	
	25-15202- 76			1	
	25-15202- 77			2	
	25-15202- 79			2	
	25-15202- 85			2	
	25-15202- 87			2	
	25-15203- 1			1	
	25-15203- 2			1	
	25-15203- 3			1	
	25-15203- 4			1	
	25-15203- 5			1	
	25-15203- 6			1	
	25-15203- 7			1	
	25-15203- 8			1	
	25-15203- 9			1	
	25-15203- 10			1	
	25-15203- 11			1	
	25-15203- 12			1	
	25-15203- 13			1	
	25-15203- 14			1	

STOCK	PART NUMBER	SOURCE CODE	FIGURE & INDEX NO.	QTY. PER A/C	MICROFILM INDEX
	25-15203- 15			1	
	25-15203- 16			1	
	25-15203- 17			1	
	25-15203- 18			1	
	25-15203- 19			1	
	25-15203- 20			1	
	25-15203- 21			1	
	25-15203- 22			1	
	25-15204- 1			1	
	25-15204- 2			1	
	25-15204- 3			1	
	25-15204- 4			1	
	25-15204- 5			1	
	25-15204- 6			1	
	25-15204- 7			1	
	25-15204- 8			1	
	25-15204- 9			1	
	25-15204- 10			1	
	25-15204- 11			1	
	25-15204- 12			1	
	25-15204- 13			1	
	25-15204- 14			1	
	25-15204- 15			1	
	25-15204- 16			1	
	25-15204- 17			1	
	25-15204- 18			1	
	25-15204- 19			2	
	25-15204- 21			2	
	25-15204- 23			1	
	25-15204- 24			1	
	25-15204- 25			1	
	25-15204- 26			1	
	25-15204- 27			1	
	25-15204- 28			1	
	25-15204- 29			1	
	25-15204- 30			1	
	25-15204- 31			1	
	25-15204- 32			1	
	25-15204- 33			1	
	25-15204- 34			1	
	25-15204- 35			1	
	25-15204- 36			1	
	25-15204- 37			2	
	25-15204- 39			4	
	25-15204- 41			4	
	25-15204- 43			2	
	25-15204- 45			2	
	25-15204- 47			2	
	25-15204- 49			4	
	25-15204- 51			4	
	25-15204- 53			1	
	25-15204- 54			1	
	25-15204- 55			1	
	25-15204- 56			1	
	25-15204- 57			1	
	25-15204- 58			1	
	25-15204- 59			1	
	25-15204- 60			1	
	25-15204- 61			1	
	25-15204- 62			1	
	25-15204- 63			1	
	25-15204- 64			1	
	25-15204- 65			1	
	25-15204- 66			1	
	25-15204- 67			1	
	25-15204- 68			1	
	25-15204- 69			1	
	25-15204- 70			1	
	25-15204- 71			1	
	25-15204- 72			1	
	25-15204- 73			1	
	25-15204- 74			1	
	25-15204- 75			1	
	25-15204- 76			1	
	25-15204- 77			1	
	25-15204- 78			1	
	25-15204- 79			1	
	25-15204- 80			1	
	25-15204- 81			2	
	25-15204- 83			2	
	25-15204- 85			4	
	25-15204- 87			2	
	25-15204- 89			2	
	25-15204- 91			2	
	25-15204- 93			2	
	25-15204- 95			2	
	25-15205- 1			1	
	25-15205- 2			1	
	25-15205- 3			2	
	25-15205- 5			2	
	25-15205- 7			1	
	25-15205- 8			1	
	25-15205- 9			2	
	25-15205- 11			2	
	25-15205- 13			1	
	25-15205- 14			1	

STOCK	PART NUMBER	SOURCE CODE	FIGURE & INDEX NO.	QTY. PER A/C	MICROFILM INDEX
	25-15205- 15			1	
	25-15205- 16			1	
	25-15205- 17			1	
	25-15205- 18			1	
	25-15205- 19			1	
	25-15205- 20			1	
	25-15205- 21			1	
	25-15205- 22			1	
	25-15205- 23			1	
	25-15205- 24			1	
	25-15205- 25			1	
	25-15205- 26			1	
	25-15205- 27			1	
	25-15205- 28			1	
	25-15205- 29			1	
	25-15205- 30			1	
	25-15205- 31			1	
	25-15205- 32			1	
	25-15205- 33			1	
	25-15205- 34			1	
	25-15205- 35			1	
	25-15205- 36			1	
	25-15205- 37			1	
	25-15205- 38			1	
	25-15205- 39			1	
	25-15205- 40			1	
	25-15205- 41			2	
	25-15205- 43			2	
	25-15205- 45			2	
	25-15205- 47			2	
	25-15205- 49			2	
	25-15205- 51			1	
	25-15205- 52			1	
	25-15205- 53			6	
	25-15205- 55			2	
	25-15205- 57			6	
	25-15205- 59			2	
	25-15206- 1			2	
	25-15206- 2			2	
	25-15206- 3			1	
	25-15206- 5			1	
	25-15206- 9			2	
	25-15206- 11			1	
	25-15206- 12			1	
	25-15206- 13			1	
	25-15206- 14			1	
	25-15206- 15			1	
	25-15206- 16			1	
	25-15206- 17			2	
	25-15206- 19			1	
	25-15206- 20			1	
	25-15206- 23			1	
	25-15206- 24			1	
	25-15206- 25			1	
	25-15206- 26			1	
	25-15206- 27			1	
	25-15206- 28			1	
	25-15206- 29			1	
	25-15206- 30			1	
	25-15206- 31			1	
	25-15206- 32			1	
	25-15206- 33			1	
	25-15206- 34			1	
	25-15206- 35			1	
	25-15206- 36			1	
	25-15206- 37			1	
	25-15206- 38			1	
	25-15206- 39			1	
	25-15206- 40			1	
	25-15206- 41			1	
	25-15206- 42			1	
	25-15206- 43			1	
	25-15206- 44			1	
	25-15206- 45			1	
	25-15206- 46			1	
	25-15206- 47			1	
	25-15206- 48			1	
	25-15206- 49			2	
	25-15206- 51			4	
	25-15206- 53			4	
	25-15206- 55			6	
	25-15206- 57			6	
	25-15206- 59			1	
	25-15206- 60			1	
	25-15206- 61			1	
	25-15206- 62			1	
	25-15206- 63			1	
	25-15206- 64			1	
	25-15206- 65			1	
	25-15206- 66			1	
	25-15206- 67			2	
	25-15206- 69			2	
	25-15206- 71			2	
	25-15206- 73			2	
	25-15206- 74			2	
	25-15206- 75			1	

STOCK	PART NUMBER	SOURCE CODE	FIGURE & INDEX NO.	QTY. PER A/C	MICROFILM INDEX
	25-15206- 76			1	
	25-15206- 77			1	
	25-15206- 79			1	
	25-15207- 1			1	
	25-15207- 2			1	
	25-15207- 3			1	
	25-15207- 4			1	
	25-15207- 5			1	
	25-15207- 6			1	
	25-15207- 7			1	
	25-15207- 8			1	
	25-15207- 9			1	
	25-15207- 10			1	
	25-15207- 11			1	
	25-15207- 12			1	
	25-15207- 13			1	
	25-15207- 14			1	
	25-15207- 15			1	
	25-15207- 16			1	
	25-15207- 17			1	
	25-15207- 18			1	
	25-15207- 19			1	
	25-15207- 20			1	
	25-15207- 21			1	
	25-15207- 22			1	
	25-15207- 23			1	
	25-15207- 24			1	
	25-15207- 25			1	
	25-15207- 26			1	
	25-15207- 27			1	
	25-15207- 28			1	
	25-15207- 29			2	
	25-15207- 31			2	
	25-15207- 33			1	
	25-15207- 34			1	
	25-15207- 35			2	
	25-15207- 37			2	
	25-15207- 39			4	
	25-15207- 41			1	
	25-15207- 42			1	
	25-15207- 43			1	
	25-15207- 44			1	
	25-15207- 45			1	
	25-15207- 46			1	
	25-15207- 47			4	
	25-15208- 3			2	
	25-15208- 4			2	
	25-15209- 1			2	
	25-15209- 3			2	
	25-15209- 5			2	
	25-15210- 1			1	
	25-15210- 2			1	
	25-15210- 3			1	
	25-15210- 4			1	
	25-15210- 5			1	
	25-15210- 6			1	
	25-15210- 7			1	
	25-15210- 8			1	
	25-15210- 9			1	
	25-15210- 10			1	
	25-15210- 11			1	
	25-15210- 12			1	
	25-15210- 13			1	
	25-15210- 14			1	
	25-15210- 15			1	
	25-15210- 16			1	
	25-15210- 17			2	
	25-15210- 19			2	
	25-15210- 21			8	
	25-15210- 23			2	
	25-15210- 25			4	
	25-15210- 27			4	
	25-15210- 29			2	
	25-15210- 31			2	
	25-15210- 33			2	
	25-15210- 35			2	
	25-15210- 37			2	
	25-15210- 39			2	
	25-15210- 41			1	
	25-15210- 42			1	
	25-15210- 43			1	
	25-15210- 44			1	
	25-15211- 1			1	
	25-15211- 2			1	
	25-15211-1-3			1	
	25-15211-1-3C			1	
	25-15211-2-4			1	
	25-15211-2-4C			1	
	25-15212- 3			1	
	25-15212- 4			1	
	25-15212- 5			1	
	25-15212- 6			1	
	25-15212- 7			1	
	25-15212- 8			1	
	25-15212- 9			1	
	25-15212- 10			1	

STOCK	PART NUMBER	SOURCE CODE	FIGURE & INDEX NO.	QTY. PER A/C	MICROFILM INDEX
	25-15212- 11			1	
	25-15212- 12			1	
	25-15212- 13			1	
	25-15212- 14			1	
	25-15212- 15			1	
	25-15212- 16			1	
	25-15212- 17			1	
	25-15212- 18			1	
	25-15212- 19			1	
	25-15212- 20			1	
	25-15212- 21			1	
	25-15212- 22			1	
	25-15212- 23			1	
	25-15212- 24			1	
	25-15212- 25			1	
	25-15212- 26			1	
	25-15212- 27			1	
	25-15212- 28			1	
	25-15212- 29			1	
	25-15212- 30			1	
	25-15212- 31			1	
	25-15212- 32			1	
	25-15212- 33			1	
	25-15212- 34			1	
	25-15212- 35			1	
	25-15212- 36			1	
	25-15212- 37			1	
	25-15212- 38			1	
	25-15212- 39			6	
	25-15213- 1			1	
	25-15213- 2			1	
	25-15213- 3			2	
	25-15213- 5			2	
	25-15213- 7			2	
	25-15213- 9			2	
	25-15213- 11			2	
	25-15213- 13			4	
	25-15213- 19			2	
	25-15213- 21			1	
	25-15213- 22			1	
	25-15213- 23			1	
	25-15213- 24			2	
	25-15213- 25			1	
	25-15213- 26			1	
	25-15213- 27			1	
	25-15213- 28			1	
	25-15213- 29			1	
	25-15213- 30			1	
	25-15213- 31			1	
	25-15213- 32			1	
	25-15213- 33			1	
	25-15213- 34			1	
	25-15213- 35			2	
	25-15213- 37			1	
	25-15213- 38			1	
	25-15213-603			2	
	25-15213-604			2	
	25-15214- 1			1	
	25-15214- 2			1	
	25-15214- 3			1	
	25-15214- 4			1	
	25-15214- 5			1	
	25-15214- 6			1	
	25-15214- 7			1	
	25-15214- 8			1	
	25-15215- 1			2	
	25-15215- 3			2	
	25-15215- 5			2	
	25-15216- 1			1	
	25-15216- 2			1	
	25-15216- 3			1	
	25-15216- 4			1	
	25-15216- 5			1	
	25-15216- 6			1	
	25-15217- 1			1	
	25-15217- 2			1	
	25-15218- 1			1	
	25-15218- 2			1	
	25-15219- 1			1	
	25-15219- 2			1	
	25-15220- 3			10	
	25-15220- 5			14	
	25-15220- 7			2	
	25-15220- 9			4	
	25-15222- 1			1	
	25-15222- 2			1	
	25-15222- 3			1	
	25-15222- 4			1	
	25-15222- 5			1	
	25-15222- 6			1	
	25-15222- 7			1	
	25-15222- 8			1	
	25-15222- 9			1	
	25-15222- 10			1	
	25-15222- 11			1	
	25-15222- 12			1	

STOCK	PART NUMBER	SOURCE CODE	FIGURE & INDEX NO.	QTY. PER A/C	MICROFILM INDEX
	25-15223- 3			1	
	25-15223- 4			1	
	25-15224- 3F			2	
	25-15224- 4F			2	
	25-15225- 3			32	
	25-15225- 5			28	
	25-15225- 7			8	
	25-15225- 9			12	
	25-15225- 11			4	
	25-15226- 3			1	
	25-15226- 4			1	
	25-15227- 3			2	
	25-15228- 3			2	
	25-15229- 1			1	
	25-15229- 2			1	
	25-15230- 1			1	
	25-15230- 2			1	
	25-15231- 1			1	
	25-15231- 2			1	
	25-15233- 3			2	
	25-15234- 1			1	
	25-15234- 2			1	
	25-15234- 3			1	
	25-15234- 4			1	
	25-15234- 5			1	
	25-13234- 6			1	
	25-15234- 7			1	
	25-15234- 8			1	
	25-15234- 9			1	
	25-15234- 10			1	
	25-15234- 11			1	
	25-15234- 12			1	
	25-15234- 13			1	
	25-15234- 14			1	
	25-15234- 15			1	
	25-15234- 16			1	
	25-15234- 17			1	
	25-15234- 18			1	
	25-15234- 19			1	
	25-15234- 20			1	
	25-15234- 21			2	
	25-15234- 23			6	
	25-15234- 25			2	
	25-15234- 27			2	
	25-15235- 3			2	
	25-15236- 1			2	
	25-15236- 2			2	
	25-15236- 3			2	
	25-15236- 4			2	
	25-15237- 1			1	
	25-15237- 2			1	
	25-15237- 5			1	
	25-15237- 7			1	
	25-15237- 9			1	
	25-15237- 10			1	
	25-15237- 11			1	
	25-15237- 13			1	
	25-15237- 15			2	
	25-15237- 17			6	
	25-15237- 19			4	
	25-15237- 21			4	
	25-15237- 23			2	
	25-15237- 25			2	
	25-15237- 27			2	
	25-15237- 29			2	
	25-15237- 31			2	
	25-15237- 33			2	
	25-15237- 35			2	
	25-15237- 37			2	
	25-15237- 39			2	
	25-15237- 41			2	
	25-15237- 43			2	
	25-15237- 45			4	
	25-15237- 47			1	
	25-15237- 49			1	
	25-15237- 51			1	
	25-15237- 53			2	
	25-15237- 55			2	
	25-15238- 1			1	
	25-15238- 2			1	
	25-15238- 3			1	
	25-15238- 4			1	
	25-15238- 5			1	
	25-15238- 6			1	
	25-15238- 7			2	
	25-15238- 9			2	
	25-15238- 11			2	
	25-15238- 13			2	
	25-15238- 15			2	
	25-15238- 17			2	
	25-15238- 19			1	
	25-15238- 20			1	
	25-15238- 21			1	
	25-15238- 22			1	
	25-15238- 23			1	
	25-15238- 24			1	

STOCK	PART NUMBER	SOURCE CODE	FIGURE & INDEX NO.	QTY. PER A/C	MICROFILM INDEX
	25-15238- 25			1	
	25-15238- 26			1	
	25-15238- 27			1	
	25-15238- 28			1	
	25-15238- 29			1	
	25-15238- 30			1	
	25-15238- 31			1	
	25-15238- 32			1	
	25-15238- 33			1	
	25-15238- 34			1	
	25-15238- 35			1	
	25-15238- 36			1	
	25-15238- 37			1	
	25-15238- 38			1	
	25-15238- 39			1	
	25-15238- 40			1	
	25-15238- 41			1	
	25-15238- 42			1	
	25-15238- 43			1	
	25-15238- 44			1	
	25-15238- 45			1	
	25-15238- 46			1	
	25-15238- 47			2	
	25-15238- 49			2	
	25-15238- 51			2	
	25-15238- 53			2	
	25-15238- 55			2	
	25-15238- 57			4	
	25-15238- 59			6	
	25-15238- 61			4	
	25-15238- 63			4	
	25-15238- 65			2	
	25-15238- 67			2	
	25-15238- 69			1	
	25-15238- 70			1	
	25-15238- 71			2	
	25-15238- 73			2	
	25-15238- 75			2	
	25-15238- 77			2	
	25-15238- 79			2	
	25-15238- 81			2	
	25-15238- 83			2	
	25-15290- 3			2	
	25-15240- 3			1	
	25-15240- 4			1	
	25-15241- 3			3	
	25-15241- 4			3	
	25-15242- 3			6	
	25-15243- 3			4	
	25-15243- 5			2	
	25-15243- 7			2	
	25-15243- 9			4	
	25-15244- 1			1	
	25-15244- 2			1	
	25-15244- 3			1	
	25-15244- 4			1	
	25-15244- 5			4	
	25-15245- 3			2	
	25-15245- 4			2	
	25-17000			2	A-202
	25-17000- 1	*	2 - 1 3 -	1	
	25-17000- 2	*	2 - 1 3 -	1	
	25-17001-301		3 - 1	1	
	25-17001-302		3 - 1	1	
	25-17002			4	XA-166 XA-167 XA-168
	25-17002- 3	M1		1	
	25-17002- 4	M1		1	
	25-17002- 5	M1		1	
	25-17002- 6			1	
	25-17002- 7	M1		4	
	25-17002- 11	M1		1	
	25-17002- 12	M1		1	
	25-17002- 13	M1		1	
	25-17002- 14	M1		1	
	25-17002- 15	M1		1	
	25-17002- 16			1	
	25-17002- 17	M1		1	
	25-17002- 18			1	
	25-17002- 19	M1		1	
	25-17002- 20	M1		1	
	25-17002- 21	M1		1	
	25-17002- 22	M1		1	
	25-17002- 23	M1		1	
	25-17002- 24	M1		1	
	25-17002- 25	M1		1	
	25-17002- 26	M1		1	
	25-17002- 27	M1		1	
	25-17002- 28			1	
	25-17002- 29	M1		1	
	25-17002- 30			1	
	25-17002- 31	M1		1	
	25-17002- 32	M1		1	
	25-17002- 33	M1		1	

STOCK	PART NUMBER	SOURCE CODE	FIGURE & INDEX NO.	QTY. PER A/C	MICROFILM INDEX
	25-17002- 34	M1		1	
	25-17002- 35	M1		1	
	25-17002- 36	M1		1	
	25-17002- 37	M1	3 -	1	
	25-17002- 38	M1	3 -	1	
	25-17002- 41	M1		1	
	25-17002- 42	M1		1	
	25-17002- 45	M1		1	
	25-17002- 46	M1		1	
	25-17002- 47	M1	3 - 10	1	
	25-17002- 48	M1	3 - 10	1	
	25-17002- 51	M1		1	
	25-17002- 52	M1		1	
	25-17002- 55	M1		1	
	25-17002- 56	M1		1	
	25-17002- 57	M1	3 - 13	1	
	25-17002- 58	M1	3 - 13	1	
	25-17002- 67			1	
	25-17002- 68			1	
	25-17002- 69			1	
	25-17002- 70			1	
	25-17002- 71			1	
	25-17002- 72			1	
	25-17002- 79	M1		2	
	25-17002- 81	M1		1	
	25-17002- 82	M1		1	
	25-17002- 83	M1		1	
	25-17002- 84	M1		1	
	25-17002- 85	M1		1	
	25-17002- 86	M1		1	
	25-17002- 87	M1		1	
	25-17002- 88	M1		1	
	25-17002- 89	M1		1	
	25-17002- 90	M1		1	
	25-17002- 91	M1		1	
	25-17002- 92	M1		1	
	25-17002- 93	M1		1	
	25-17002- 94	M1		1	
	25-17002- 95	M1		2	
	25-17002- 96	M1		1	
	25-17002- 97	M1		1	
	25-17002- 98	M1		1	
	25-17002- 99	M1		2	
	25-17002-101	M1		2	
	25-17002-103	M1		18	
	25-17002-105	M1		8	
	25-17002-107			2	
	25-17002-109			2	
	25-17002-111	M1		4	
	25-17002-113	M1		4	
	25-17002-115	M1		2	
	25-17002-117	M1		2	
	25-17002-119	M1		4	
	25-17002-121	M1		4	
	25-17002-123	M1		4	
	25-17002-125	M1		4	
	25-17002-127	M1	3 - 18	1	
	25-17002-128	M1	3 - 18	1	
	25-17002-135	M1		2	
	25-17002-137	M1		2	
	25-17002-139	M1		1	
	25-17002-140	M1		1	
	25-17002-141			2	
	25-17002-142			2	
	25-17002-143			2	
	25-17002-144			2	
	25-17002-145			1	
	25-17002-146			1	
	25-17002-147			1	
	25-17002-148			1	
	25-17002-149			1	
	25-17002-150			1	
	25-17002-151			2	
	25-17002-301		3 -	1	
	25-17002-302		3 -	1	
	25-17003- 7	P1	3 - 8	1	C-368
	25-17003- 8	P1	3 - 8	1	
	25-17004- 4			1	E-160
	25-17004- 7	X1		2	
	25-17004- 8	X1		2	
	25-17004- 11			1	
	25-17004-301		3 - 19	1	
	25-17004-302		3 - 19	1	
	25-17005- 1	X2	3 - 7	1	
	25-17005- 2	X2	3 - 7	1	
	25-17005- 3	X1		1	
	25-17005- 4	X1		1	
	25-17005- 5	X1		1	
	25-17005- 6	X1		1	
	25-17005- 9	X1		3	
	25-17005- 10	X1		3	
	25-17005- 13			1	
	25-17005- 14			1	
	25-17006- 1	X2	3 - 6	1	
	25-17006- 2	X2	3 - 6	1	
	25-17006- 3	X1		1	
	25-17006- 4	X1		1	
	25-17006- 5	X1		1	
	25-17006- 6			1	
	25-17006- 9	X1		3	
	25-17006- 10	X1		3	
	25-17006- 13			1	
	25-17006- 14			1	
	25-17007- 1	X2	3 - 12	1	C-369
	25-17007- 2	X2	3 - 12	1	
	25-17007- 3C	X1		2	
	25-17007- 5	X1		1	
	25-17007- 6	X1		1	
	25-17008- 1	X2	3 - 15	1	C-370
	25-17008- 2	X2	3 - 15	1	
	25-17008- 3C	X1		2	
	25-17008- 5	X1		1	
	25-17008- 6	X1		1	
R82MDA-	25-17011- 3	P	3 - 17	8	
	25-17012- 7	M1		1	
	25-17012- 8	M1		1	
	25-17012- 11	M1		2	
	25-17012- 13			2	
	25-17012- 14			2	
	25-17012-301			1	
	25-17012-302			1	
	25-17018- 5	M1		1	
	25-17018- 6	M1		1	
	25-17018- 7	M1		1	
	25-17018- 8	M1		1	
	25-17018- 9			2	
	25-17018- 11			2	
	25-17018-301			1	
	25-17018-302			1	
	25-17019- 5	M1		1	
	25-17019- 6	M1		1	
	25-17019- 7	M1		1	
	25-17019- 8	M1		1	
	25-17019- 9			2	
	25-17019- 11			2	
	25-17019-301			1	
	25-17019-302			1	
	25-17020- 3	M1		1	
	25-17020- 4	M1		1	
	25-17020- 7	M1		1	
	25-17020- 8	M1		1	
	25-17020- 9			1	
	25-17020- 10			1	
	25-17020- 11			2	
	25-17020-301			1	
	25-17020-302			1	
	25-17021- 3			1	
	25-17021- 4			1	
	25-17021- 7			1	
	25-17021- 8			1	
	25-17021- 11	M1		1	
	25-17021- 12	M1		1	
	25-17021- 13			1	
	25-17021- 14			1	
	25-17021- 15			2	
	25-17021- 17			2	
	25-17021- 18			2	
	25-17021- 19			4	
	25-17021- 21			1	
	25-17021- 22			1	
	25-17021-301			1	
	25-17021-302			1	
	25-17022- 7	M1		1	D-321
	25-17022- 8	M1		1	
	25-17022- 9	M1		1	
	25-17022- 10	M1		1	
	25-17022- 11			2	
	25-17022- 13			1	
	25-17022- 14			1	
	25-17022-301			1	
	25-17022-302			1	
	25-17023- 7	M1		1	D-322
	25-17023- 8	M1		1	
	25-17023- 11	M1		1	
	25-17023- 12	M1		1	
	25-17023- 13			1	
	25-17023- 14			1	
	25-17023- 15			2	
	25-17023-301			1	
	25-17023-302			1	
	25-17025- 5P	X1		2	
	25-17025- 6P	X1		2	
	25-17027- 3	M1		1	D-323
	25-17027- 4	M1		1	
	25-17027- 7	M1		1	
	25-17027- 8	M1		1	
	25-17027- 11			1	
	25-17027- 12			1	
	25-17027- 13			2	
	25-17027-301			1	
	25-17027-302			1	
	25-17028- 3	M1		1	D-324

STOCK	PART NUMBER	SOURCE CODE	FIGURE & INDEX NO.	QTY. PER A/C	MICROFILM INDEX
	25-17028- 4	M1		1	
	25-17028- 7	M1		1	
	25-17028- 8	M1		1	
	25-17028- 9	M1		1	
	25-17028- 10	M1		1	
	25-17028- 11			2	
	25-17028- 13			1	
	25-17028- 14			1	
	25-17028- 15			1	
	25-17028- 16			1	
	25-17028-301			1	
	25-17028-302			1	
	25-17029- 3	M1		1	D-329
	25-17029- 4	M1		1	
	25-17029- 5	M1		1	
	25-17029- 6	M1		1	
	25-17029- 7	M1		1	
	25-17029- 8	M1		1	
	25-17030- 3	M1		1	
	25-17030- 4	M1		1	
	25-17030- 5	M1		1	
	25-17030- 6	M1		1	
	25-17030- 7	M1		1	
	25-17030- 8	M1		1	
	25-17031- 1	M1		1	
	25-17031- 2	M1		1	
	25-17031- 3	M1		1	
	25-17031- 4	M1		2	
	25-17032- 3	M1		1	
	25-17032- 4	M1		1	
	25-17033- 3	M1		1	
	25-17033- 4	M1		1	
	25-17034- 3	M1		1	
	25-17034- 4	M1		1	
	25-17034- 5	M1		1	
	25-17034- 6	M1		1	
	25-17034- 7	M1		1	
	25-17034- 8	M1		1	
	25-17034- 9	M1		1	
	25-17034- 10	M1		1	
	25-17035- 7	X2		2	E-162
	25-17035- 8	X2		2	
	25-17035- 9			2	
	25-17035-301		3 - 20	1	
	25-17035-302		3 - 20	1	
	25-17036- 3F	X1		2	E-163
	25-17037- 7		3 - 16	1	E-164
	25-17037- 8		3 - 16	1	
	25-17038- 3F	X1		2	
	25-17039- 5	X1		1	
	25-17039- 6	X1		1	
	25-17040- 3F	X1		2	
	25-17041- 5	X1		1	
	25-17041- 6			1	
	25-17042- 1			1	
	25-17042- 2	M1		1	
	25-17042- 5	M1		1	
	25-17042- 6	M1		1	
	25-17042- 7			1	
	25-17042- 8			1	
	25-17042- 9			1	
	25-17042- 10			1	
	25-17042- 11	M1		1	
	25-17042- 12	M1		1	
	25-17042- 13	M1		1	
	25-17042- 14	M1		1	
	25-17042- 15	M1		1	
	25-17042- 16	M1		1	
	25-17042- 17	M1		1	
	25-17042- 18	M1		1	
	25-17042- 19	M1		1	
	25-17042- 20	M1		1	
	25-17042- 21	M1		2	
	25-17042- 22	M1		2	
	25-17042- 23	M1		2	
	25-17042- 24	M1		2	
	25-17042- 25	M1		1	
	25-17042- 26	M1		1	
	25-17042- 27	M1		1	
	25-17042- 28	M1		1	
	25-17042- 29	M1		1	
	25-17042- 30	M1		1	
	25-17042-301	M1		1	
	25-17042-302	M1		1	
	25-17043- 3	M1		2	
	25-17043- 5			2	
	25-17044- 3	M1		22	
	25-17044- 5	M1		8	
	25-17044- 7			30	
	25-17045- 3	M1		2	
	25-17045- 5			2	
	25-17046- 1	M1		1	
	25-17046- 2	M1		1	
	25-17046- 3	M1		1	
	25-17046- 4	M1		1	
	25-17046- 7	M1		1	

STOCK	PART NUMBER	SOURCE CODE	FIGURE & INDEX NO.	QTY. PER A/C	MICROFILM INDEX
	25-17046- 8	M1		1	
	25-17047- 1	M1		1	
	25-17047- 2	M1		1	
	25-17047- 3	M1		1	
	25-17047- 4	M1		1	
	25-17047- 7	M1		1	
	25-17047- 8	M1		1	
	25-17048- 3	M1	3 - 4	1	
	25-17048- 4	M1	3 - 4	1	
	25-17049- 3	M1		1	
	25-17049- 4	M1		1	
	25-17049- 7	M1		1	
	25-17049- 8	M1		1	
	25-17049- 9			2	
	25-17049- 11			2	
	25-17049-301			1	
	25-17049-302			1	
	25-17050- 3		3 - 21	1	E-165
	25-17050- 4	M1	3 - 21	1	
	25-17051- 1		3 - 9	8	NA-17
	25-17051- 3	M1		8	
	25-17051- 5	M1		8	
	25-17051- 7	M1		8	
	25-17052- 3P	X1		2	
	25-17052- 4P	X1		2	
	25-17053- 1			1	
	25-17053- 2			1	
	25-17053- 3			1	
	25-17053- 4			1	
	25-17053- 5			1	
	25-17053- 6			1	
	25-17053- 7			1	
	25-17053- 8			1	
	25-17053- 9			2	
	25-17053- 11			2	
	25-17053- 13			1	
	25-17053- 14			1	
	25-17053- 15			2	
	25-17053- 17			2	
	25-17053- 19			2	
	25-17053- 21			2	
	25-17053- 23			2	
	25-17053- 25			2	
	25-17053- 27			1	
	25-17053- 28			1	
	25-17053- 29			18	
	25-17053- 31			1	
	25-17053- 32			1	
	25-17053- 33			2	
	25-17053- 35			2	
	25-17053- 37			2	
	25-17053- 39			2	
	25-17053- 41			2	
	25-17053- 43			2	
	25-17053- 45			2	
	25-17053- 47			2	
	25-17053- 49			2	
	25-17053- 51			2	
	25-17053- 53			2	
	25-17053- 55			2	
	25-17053- 57			2	
	25-17054- 1			1	
	25-17054- 2			1	
	25-17054- 3			2	
	25-17054- 4			2	
	25-17054- 5			2	
	25-17054- 6			2	
	25-17055- 1			2	
	25-17055- 3			2	
	25-17055- 5			4	
	25-17055- 7			2	
	25-17055- 9			2	
	25-17057- 1			2	
	25-17057- 3			2	
	25-17057- 5			2	
	25-17057- 7			2	
	25-17057- 9			8	
	25-17058- 3			1	
	25-17058- 4			1	
	25-17059- 1			1	
	25-17059- 2			1	
	25-17059- 3			1	
	25-17059- 4			1	
	25-17060- 1			1	
	25-17060- 2			1	
	25-17060- 3			1	
	25-17060- 4			1	
	25-17061- 1			1	
	25-17061- 2			1	
	25-17061- 5			1	
	25-17061- 6			1	
	25-17061- 7			1	
	25-17061- 8			1	
	25-17062- 1			1	
	25-17062- 2			1	
	25-17062- 5			1	

STOCK	PART NUMBER	SOURCE CODE	FIGURE & INDEX NO.	QTY. PER A/C	MICROFILM INDEX
	25-17062- 6			1	
	25-17062- 7			1	
	25-17062- 8			1	
	25-17063- 1			1	
	25-17063- 2			1	
	25-17063- 3			1	
	25-17063- 4			1	
	25-17064- 1			1	
	25-17064- 2			1	
	25-17064- 3			1	
	25-17064- 4			1	
	25-17064- 5			1	
	25-17064- 6			1	
	25-17065- 1			1	
	25-17065- 2			1	
	25-17065- 3			1	
	25-17065- 4			1	
	25-17065- 5			1	
	25-17065- 6			1	
	25-17066- 1			1	
	25-17066- 2			1	
	25-17066- 3			1	
	25-17066- 4			1	
	25-17066- 5			2	
	25-17067- 1			1	
	25-17067- 2			1	
	25-17067- 3			1	
	25-17067- 4			1	
	25-17068- 1			1	
	25-17068- 2			1	
	25-17068- 5			1	
	25-17068- 6			1	
	25-17068- 7			2	
	25-17068- 9			1	
	25-17068- 10			1	
	25-17069- 1			1	
	25-17069- 2			1	
	25-17069- 5			1	
	25-17069- 6			1	
	25-17069- 7			2	
	25-17069- 9			1	
	25-17069- 10			1	
	25-17070- 1			1	
	25-17070- 2			1	
	25-17070- 3			1	
	25-17070- 4			1	
	25-17070- 5			2	
	25-17071- 1			1	
	25-17071- 2			1	
	25-17071- 3			1	
	25-17071- 4			1	
	25-17071- 5			1	
	25-17071- 6			1	
	25-17071- 7			1	
	25-17071- 8			1	
	25-17071- 9			1	
	25-17071- 10			1	
	25-17071- 11			2	
	25-17072- 3			1	
	25-17072- 4			1	
	25-17074- 3			4	
	25-17075- 1			1	
	25-17075- 2			1	
	25-17075- 3			1	
	25-17075- 4			1	
	25-17075- 5			1	
	25-17075- 6			1	
	25-17075- 7			1	
	25-17075- 8			1	
	25-17075- 9			1	
	25-17075- 10			1	
	25-17075- 11			1	
	25-17075- 12			1	
	25-17075- 13			1	
	25-17075- 14			1	
	25-17075- 15			1	
	25-17075- 16			1	
	25-17075- 17			1	
	25-17075- 18			1	
	25-17075- 19			1	
	25-17075- 20			1	
	25-17075- 21			1	
	25-17075- 22			1	
	25-17075- 23			1	
	25-17075- 24			1	
	25-17075- 25			1	
	25-17075- 26			1	
	25-17075- 27			1	
	25-17075- 28			1	
	25-17075- 29			1	
	25-17075- 30			1	
	25-17075- 31			1	
	25-17075- 32			1	
	25-17075- 33			1	
	25-17075- 34			1	
	25-17075- 35			1	
	25-17075- 36			1	
	25-17075- 37			1	
	25-17075- 38			1	
	25-17076- 3			2	
	25-17077- 3			2	
	25-17077- 5			2	
	25-17100- 1			1	
	25-17100- 2			1	
	25-17101- 1			1	
	25-17101- 2			1	
	25-17102- 1			1	
	25-17102- 2			1	
	25-17102- 3			1	
	25-17102- 4			1	
	25-17102- 5			1	
	25-17102- 6			1	
	25-17102- 7			1	
	25-17102- 8			1	
	25-17102- 9			1	
	25-17102- 10			1	
	25-17102- 11			2	
	25-17102- 13			2	
	25-17102- 15			2	
	25-17102- 17			2	
	25-17102- 19			4	
	25-17102- 21			1	
	25-17102- 22			1	
	25-17102- 23			1	
	25-17102- 24			1	
	25-17102- 25			1	
	25-17102- 26			1	
	25-17102- 27			1	
	25-17102- 28			1	
	25-17102- 29			1	
	25-17102- 30			1	
	25-17102- 31			1	
	25-17102- 32			1	
	25-17102- 33			1	
	25-17102- 34			1	
	25-17102- 35			1	
	25-17102- 36			1	
	25-17102- 37			2	
	25-17102- 39			2	
	25-17102- 41			2	
	25-17102- 45			4	
	25-17102- 47			1	
	25-17102- 48			1	
	25-17102- 49			1	
	25-17102- 50			1	
	25-17102- 51			8	
	25-17102- 53			4	
	25-17102- 55			1	
	25-17102- 57			1	
	25-17102- 59			1	
	25-17102- 61			1	
	25-17102- 63			2	
	25-17102- 65			4	
	25-17103- 7			1	
	25-17103- 8			1	
	25-17103- 9			1	
	25-17103- 10			1	
	25-18000- 1	*	14 - 2 16 -	1	E-166
	25-18000- 2	*	14 - 2 16 -	1	
	25-18002- 1	P1		1	E-167
	25-18002- 2	P1		1	
	25-18002- 3	M1		1	
	25-18002- 4	M1		1	
	25-18002- 5			1	
	25-18002- 6			1	
	25-18002- 7	M1		1	
	25-18002- 8	M1		1	
	25-18002- 9	M1		1	
	25-18002- 10	M1		1	
	25-18002- 11			1	
	25-18002- 12			1	
	25-18002- 15	M1	16 - 29	2	
	25-18002- 17	M1		4	
	25-18002- 19	M1		4	
	25-18002- 23	M1		1	
	25-18002- 24	M1		1	
	25-18002- 27			2	
	25-18002- 29			4	
	25-18002-301		16 - 1	1	
	25-18002-302		16 - 1	1	
R82MDA-	25-18004- 1		16 - 7	1	C-371
R82MDA-	25-18004- 2	P1	16 - 7	1	
	25-18004- 5	X1		1	
	25-18004- 6	X1		1	
R82MDA-	25-18005- 1	P1	16 - 12	1	C-372
R82MDA-	25-18005- 2	P1	16 - 12	1	
	25-18005- 3	X1		1	
	25-18005- 4	X1		1	
	25-18006- 3	M1	16 - 9 16 - 14	2	

STOCK	PART NUMBER	SOURCE CODE	FIGURE & INDEX NO.	QTY. PER A/C	MICROFILM INDEX
	25-18007- 7	M1		1	D-326
	25-18007- 8	M1		1	
	25-18007- 9	M1		1	
	25-18007- 10	M1		1	
	25-18009- 7	M1		1	D-327
	25-18009- 8	M1		1	
	25-18010- 3	M1		1	E-168
	25-18010- 4	M1		1	
	25-18010- 9	M1		1	
	25-18010- 10	M1		1	
	25-18010- 11	M1		1	
	25-18010- 12	M1		1	
	25-18011- 3	M1		1	
	25-18011- 4	M1		1	
	25-18011- 5	M1		1	
	25-18011- 6	M1		1	
	25-18011- 11	M1		1	
	25-18011- 12	M1		1	
	25-18011- 13	M1		1	
	25-18011- 14	M1		1	
R82MDA-	25-18013- 1	P1	16 - 24	4	
	25-18013- 3	X1		4	
R82MDA-	25-18013- 5	P1	16 - 19	4	
	25-18013- 7			4	
R82MDA-	25-18014- 3	P1	16 - 17	2	
	25-18015- 5	M1		1	
	25-18015- 6	M1		1	
	25-18017- 3		16 -	1	D-328
	25-18017- 4	M1	16 -	1	
	25-18017- 11	M1		1	
	25-18017- 12	M1		1	
	25-18017- 13	M1		1	
	25-18017- 14	M1		1	
	25-18017- 15	M1		1	
	25-18017- 16	M1		1	
	25-18017- 17	M1		2	
	25-18021- 7	M1		1	D-329
	25-18021- 8	M1		1	
	25-18021- 10	M1		1	
	25-18021- 11	M1		4	
	25-18022- 5	M1		1	
	25-18022- 6	M1		1	
	25-18022- 7	M1		4	
	25-18023- 5	M1		1	
	25-18023- 6	M1		1	
	25-18024- 5	M1		1	
	25-18024- 6	M1		1	
	25-18025- 5	M1		1	
	25-18025- 6	M1		1	
	25-18026- 5	M1		1	
	25-18026- 6	M1		1	
	25-18026- 7	M1		4	
	25-18027- 7	M1		1	
	25-18027- 8	M1		2	
	25-18027- 10	M1		1	
	25-18028- 3	M1		1	D-330
	25-18028- 4	M1		1	
	25-18028- 5	M1		1	
	25-18028- 6	M1		1	
	25-18028- 17	M1		1	
	25-18028- 18	M1		1	
	25-18028- 21			1	
	25-18028- 22			1	
	25-18028- 23	M1		1	
	25-18028- 24	M1		1	
	25-18028- 25	M1		1	
	25-18028- 26	M1		1	
	25-18028- 29	M1		1	
	25-18028- 30	M1		1	
	25-18028- 31	M1		1	
	25-18028- 32	M1		1	
	25-18028- 33	M1		2	
	25-18028- 35	M1		1	
	25-18028- 36	M1		1	
	25-18028- 37			1	
	25-18028- 38			1	
	25-18028- 39			1	
	25-18028- 40			1	
	25-18028- 41			1	
	25-18028- 42			1	
	25-18028- 43			1	
	25-18028- 44			1	
	25-18028- 45			2	
	25-18028- 47			1	
	25-18028- 48			1	
	25-18029- 3	M1		1	D-331
	25-18029- 4	M1		1	
	25-18029- 5	M1		1	
	25-18029- 6	M1		1	
	25-18029- 15	M1		1	
	25-18029- 16	M1		1	
	25-18029- 17	M1		1	
	25-18029- 18	M1		1	
	25-18029- 19	M1		1	
	25-18029- 20	M1		1	
	25-18029- 21	M1		1	
	25-18029- 22			1	
	25-18029- 23	M1		4	
	25-18029- 25	M1		2	
	25-18029- 27			2	
	25-18029- 28			2	
	25-18030- 5	M1		1	
	25-18030- 6	M1		1	
	25-18031- 7	M1		1	
	25-18031- 8	M1		1	
	25-18031- 9	M1		1	
	25-18031- 10	M1		1	
	25-18032- 3	M1		1	D-332
	25-18032- 4	M1		1	
	25-18032- 5	M1		1	
	25-18032- 6	M1		1	
	25-18032- 17	M		2	
	25-18032- 21	M1		1	
	25-18032- 22	M1		1	
	25-18032- 25	M1		1	
	25-18032- 26	M1		1	
	25-18032- 27	M1		1	
	25-18032- 28	M1		1	
	25-18032- 29	M1		1	
	25-18032- 30	M1		1	
	25-18032- 31	M1		2	
	25-18032- 33	M1		4	
	25-18032- 35			2	
	25-18033- 7	M1		1	
	25-18033- 8	M1		1	
	25-18033- 9	M1		1	
	25-18033- 10	M1		1	
	25-18034- 3	M1	16 -	1	X8-14
	25-18034- 4	M1	16 -	1	
	25-18034- 15	M1		1	
	25-18034- 16	M1		1	
	25-18034- 17	M1		2	
	25-18034- 18	M1		2	
	25-18035- 9	M1		1	
	25-18035- 10	M1		1	
	25-18035- 11	M1		1	
	25-18035- 12	M1		1	
	25-18035- 13	M1		1	
	25-18035- 14	M1		1	
	25-18036- 7	M1		1	
	25-18036- 8	M1		1	
	25-18036- 9	M1		1	
	25-18036- 10	M1		1	
	25-18037- 5	M1		1	
	25-18037- 6	M1		1	
	25-18039- 3	M1	16 - 23	4	
R82MDA-	25-18040- 5	P1	16 - 26	1	C-373
R82MDA-	25-18040- 6	P1	16 - 26	1	
	25-18041- 3F	X1		8	
	25-18043- 3F	X1		2	
	25-18043- 4F	X1		2	
	25-18048- 5F	X1		2	C-374
	25-18050- 3	M1		8	
	25-18051- 7	M1		2	B-394
	25-18051- 9	M1		2	
	25-18051- 11	M1		2	
	25-18051- 13	M1		2	
	25-18052- 3	M1	16 - 31	4	
	25-18053- 3	M1		2	
R82MDA-	25-18054- 3	P1	16 - 11 16 - 16	8	
	25-18055- 5	M1	16 - 30	1	A-203
	25-18055- 6	M1	16 - 30	1	
	25-18056- 1			1	
	25-18056- 2			1	
	25-18056- 3			1	
	25-18056- 4			1	
	25-18056- 5			1	
	25-18056- 6			1	
	25-18057- 1			1	
	25-18057- 2			1	
	25-18057- 3			1	
	25-18057- 4			1	
	25-18057- 5			1	
	25-18057- 6			1	
	25-18057- 7			1	
	25-18057- 8			1	
	25-18057- 9			1	
	25-18057- 10			1	
	25-18057- 11			1	
	25-18057- 12			1	
	25-18057- 13			1	
	25-18057- 14			1	
	25-18057- 15			1	
	25-18057- 16			1	
	25-18059- 1			1	
	25-18059- 2			1	
	25-18059- 3			1	
	25-18059- 4			1	
	25-18059- 5			1	
	25-18059- 6			1	
	25-18060- 5		16 - 3	2	

STOCK	PART NUMBER	SOURCE CODE	FIGURE & INDEX NO.	QTY. PER A/C	MICROFILM INDEX
	25-18061- 5		16 - 4	2	A-204
	25-18062- 1			1	
	25-18062- 2			1	
	25-18062- 3			1	
	25-18062- 4			1	
	25-18063- 1			1	
	25-18063- 2			1	
	25-18063- 3			1	
	25-18063- 4			1	
	25-18063- 5			1	
	25-18063- 6			1	
	25-18064- 1			1	
	25-18064- 2			1	
	25-18064- 3			1	
	25-18064- 4			1	
	25-18064- 9			2	
	25-18064- 11			2	
	25-18065- 1			1	
	25-18065- 2			1	
	25-18065- 3			1	
	25-18065- 4			1	
	25-18065- 5			1	
	25-18065- 6			1	
	25-18065- 7			1	
	25-18065- 8			1	
	25-18065- 9			1	
	25-18065- 10			1	
	25-18066- 3			2	
	25-18099- 3	M1		1	E-169
	25-18099- 4	M1		1	
	25-18099- 5	M1		1	
	25-18099- 6	M1		1	
	25-18099- 13	M1		2	
	25-18099- 17	M1		2	
	25-18099- 18	M1		2	
	25-18099- 23			2	
	25-18099- 24			2	
	25-18099- 25			1	
	25-18099- 26			1	
	25-18099-301			1	
	25-18099-302			1	
	25-18100- 1			1	
	25-18100- 2			1	
	25-18102- 1			1	
	25-18102- 2			1	
	25-18102- 3			1	
	25-18102- 4			1	
	25-18102- 5			1	
	25-18102- 6			1	
	25-18102- 7			1	
	25-18102- 8			1	
	25-18103- 1			1	
	25-18103- 2			1	
	25-18103- 3			1	
	25-18103- 4			1	
	25-18103- 5			1	
	25-18103- 6			1	
	25-18103- 7			1	
	25-18103- 8			1	
	25-18103- 9			1	
	25-18103- 10			1	
	25-18103- 11			1	
	25-18103- 12			1	
	25-18103- 13			2	
	25-18103- 15			2	
	25-18103- 17			4	
	25-18103- 19			1	
	25-18103- 20			1	
	25-18103- 21			2	
	25-18103- 23			12	
	25-18103- 25			2	
	25-18103- 27			2	
	25-18103- 29			2	
	25-18104- 1			1	
	25-18104- 2			1	
	25-18104- 3			1	
	25-18104- 4			1	
	25-18105- 3			1	
	25-18105- 4			1	
	25-18106- 1			1	
	25-18106- 2			1	
	25-18106- 3			1	
	25-18106- 4			1	
	25-18106- 5			1	
	25-18106- 6			1	
	25-18106- 7			1	
	25-18106- 8			1	
	25-18106- 9			2	
	25-18106- 11			2	
	25-18106- 13			2	
	25-18106- 15			2	
	25-18106- 17			1	
	25-18106- 19			1	
	25-18103- 20			1	
	25-18106- 21			1	
	25-18106- 22			1	

STOCK	PART NUMBER	SOURCE CODE	FIGURE & INDEX NO.	QTY. PER A/C	MICROFILM INDEX
	25-18107- 1			1	
	25-18107- 2			1	
	25-18107- 3			1	
	25-18107- 4			1	
	25-18107- 5			1	
	25-18107- 6			1	
	25-18107- 7			1	
	25-18107- 8			1	
	25-18108- 1			1	
	25-18108- 2			1	
	25-18108- 3			1	
	25-18108- 4			1	
	25-18108- 5			1	
	25-18108- 6			1	
	25-18109- 1			1	
	25-18109- 2			1	
	25-18109- 3			1	
	25-18109- 4			1	
	25-18109- 5			1	
	25-18109- 6			1	
	25-18110- 1			1	
	25-18110- 2			1	
	25-18110- 3			1	
	25-18110- 4			1	
	25-18110- 5			1	
	25-18110- 6			1	
	25-19001			4	
	25-19001-301		14 - 1 17 -	1	
	25-19001-302		14 - 1 17 -	1	
	25-19002- 21	M1		1	E-171 E-172 E-173
	25-19002- 22	M1		1	
	25-19002- 23	M1	17 - 22	1	
	25-19002- 24	M1	17 - 22	1	
	25-19002- 25	M1		1	
	25-19002- 26	M1		1	
	25-19002- 27	M1		1	
	25-19002- 28	M1		1	
	25-19002- 29	M1		1	
	25-19002- 30	M1		1	
	25-19002- 31	M1		2	
	25-19002- 33	M1	17 - 15	1	
	25-19002- 34	M1	17 - 15	1	
	25-19002- 35	M1		1	
	25-19002- 36	M1		1	
	25-19002- 37	M1		4	
	25-19002- 39	M1	17 - 16	1	
	25-19002- 40		17 - 16	1	
	25-19002- 41	M1		1	
	25-19002- 42	M1		1	
	25-19002- 45		17 - 17	1	
	25-19002- 46		17 - 17	1	
	25-19002- 47	M1		1	
	25-19002- 48			1	
	25-19002- 51			1	
	25-19002- 53	M1		1	
	25-19002- 54			1	
	25-19002- 55	M1		1	
	25-19002- 56	M1		1	
	25-19002- 57			1	
	25-19002- 58	M1		1	
	25-19002- 59	M1		9	
	25-19002- 61	M1		24	
	25-19002- 63	M1		4	
	25-19002- 65	M1		2	
	25-19002- 66	M1		2	
	25-19002- 73	M1		2	
	25-19002- 74	M1		2	
	25-19002- 77	M1		8	
	25-19002- 78	M1		8	
	25-19002- 95			2	
	25-19002- 96	M1		2	
	25-19002- 97	M1		6	
	25-19002- 98	M1		2	
	25-19002-101	M1		1	
	25-19002-102	M1		1	
	25-19002-103	M1		1	
	25-19002-104	M1		1	
	25-19002-105	M1		1	
	25-19002-106	M1		1	
	25-19002-107	M1		8	
	25-19002-109	M1		4	
	25-19002-111	M1		6	
	25-19002-113			1	
	25-19002-114			1	
	25-19002-115	M1		1	
	25-19002-116	M1		1	
	25-19002-117	M1		2	
	25-19002-118	M1		2	
	25-19002-119	M1		2	
	25-19002-120	M1		2	
	25-19002-123	M1		1	
	25-19002-124	M1		1	
	25-19002-125	M1		2	

STOCK	PART NUMBER	SOURCE CODE	FIGURE & INDEX NO.	QTY. PER A/C	MICROFILM INDEX
	25-19002-126	M1		2	
	25-19002-127	M1		1	
	25-19002-128	M1		1	
	25-19002-129	M1		2	
	25-19002-130	M1		2	
	25-19002-131			1	
	25-19002-132			1	
	25-19002-133			1	
	25-19002-134			1	
	25-19002-301	X1	17 -	1	
	25-19002-302	X1	17 -	1	
	25-19002-377			2	
	25-19003- 1	P1	20 - 20	2	C-375
			21 -		
	25-19003- 9		20 - 42	4	
			20 - 54		
			21 -		
	25-19004- 1		17 - 38	3	E-174
	25-19004- 2		17 - 38	3	
	25-19004- 5	X1		3	
	25-19004- 6	X1		3	
	25-19004- 19	X1		3	
	25-19004- 20	X1		3	
	25-19004- 21	X1		2	
	25-19004- 22			2	
	25-19004- 23			1	
	25-19004- 24			1	
	25-19004- 25			2	
	25-19004- 26			2	
	25-19004- 27		7 -	1	
	25-19004- 28		7 -	1	
	25-19004-301		7 - 36	2	
	25-19004-302		7 - 36	2	
	25-19004-303		7 - 37	1	
	25-19004-304		7 - 37	1	
	25-19005- 3			3	
	25-19005- 4			3	
	25-19005- 5	X1		6	
	25-19005- 6			6	
	25-19008- 1		17 - 1	6	B-395
	25-19008- 3			6	
	25-19008- 5	M1	17 -	12	
	25-19009- 1	M1		1	XA-169 XA-170
	25-19009- 2	M1		1	
	25-19009- 3	M1		1	
	25-19009- 4	M1		1	
	25-19009- 5	M1		1	
	25-19009- 6	M1		1	
	25-19009- 7	M1		1	
	25-19009- 8	M1		1	
	25-19009- 9	M1		1	
	25-19009- 10	M1		1	
	25-19009- 11	M1		1	
	25-19009- 12	M1		1	
	25-19009- 17	M1		1	
	25-19009- 18	M1		1	
	25-19009- 23	M1		1	
	25-19009- 24	M1		1	
	25-19009- 29	M1		1	
	25-19009- 30	M1		1	
	25-19009- 35	M1		1	
	25-19009- 36	M1		1	
	25-19009- 41	M1		2	
	25-19009- 47	M1		2	
	25-19009- 48	M1		1	
	25-19009- 50	M1		1	
	25-19009- 51	M1		1	
	25-19009- 52	M1		1	
	25-19009- 53	M1		1	
	25-19009- 54	M1		1	
	25-19009- 55	M1		1	
	25-19009- 56	M1		1	
	25-19009- 57			1	
	25-19009- 58	M1		1	
	25-19009- 59			1	
	25-19009- 60	M1		1	
	25-19009- 61	M1		1	
	25-19009- 62			1	
	25-19009- 63	M1		1	
	25-19009- 64			1	
	25-19009- 67	M1		1	
	25-19009- 68	M1		1	
	25-19009- 69			1	
	25-19009- 70	M1		1	
	25-19009- 71	M1		1	
	25-19009- 72			1	
	25-19009- 75	M1		1	
	25-19009- 76	M1		1	
	25-19009- 77			1	
	25-19009- 78			1	
	25-19009- 79	M1		1	
	25-19009- 80	M1		1	
	25-19009- 81	M1		1	
	25-19009- 82	M1		1	
	25-19009- 83			1	
	25-19009- 84	M1		1	
	25-19009- 85	M1		1	
	25-19009- 86	M1		1	
	25-19009- 87	M1		1	
	25-19009- 88	M1		1	
	25-19009- 89			1	
	25-19009- 90			1	
	25-19010- 9			1	D-334
	25-19010- 10	M1		1	
	25-19010- 11			2	
	25-19010- 12			2	
	25-19010- 13			1	
	25-19010- 14			1	
	25-19010-301			1	
	25-19010-302			1	
	25-19011- 3	X1	21 - 13	4	E-177
	25-19011- 5	X1	21 - 13	4	
	25-19013- 3	M1	6 - 4	20	A-205
			6 - 12		
	25-19013- 5	M1	6 - 2	46	
			6 - 10		
			21 - 8		
			21 - 12		
			21 - 18		
			21 - 22		
	25-19013- 7		21 - 4	6	
	25-19013- 9		21 - 12	2	
	25-19013- 11		21 - 18	10	
R82MDA-	25-19014- 3		17 - 37	16	A-206
R82MDA-	25-19014- 5	P	7 - 46	12	
			17 - 7		
R82MDA-	25-19014- 7		7 - 45	8	
	25-19014- 9			12	
R82MDA-	25-19015- 3	P1	17 - 36	6	A-207
R82MDA-	25-19017- 3	P1	17 - 39	2	A-208
R82MDA-	25-19017- 5	P1	17 - 34	2	
R82MDA-	25-19017- 7		17 - 33	2	
	25-19018- 3		21 - 25	1	C-377
	25-19018- 4		21 - 25	1	
	25-19019- 3		21 - 25	2	C-378
	25-19020- 3		21 - 25	1	C-379
	25-19020- 4	X1	21 - 25	1	
	25-19021- 1	P1	20 - 26	1	C-380
			21 -		
	25-19021- 2	P1	20 - 26	1	
			21 -		
	25-19021- 3	P1	20 - 46	2	
			21 -		
	25-19021- 5	P1	20 - 60	1	
			21 -		
	25-19021- 6	P1	20 - 60	1	
			21 -		
	25-19022- 3	M1		1	E-178
	25-19022- 4	M1		1	
	25-19022- 5	M1		1	
	25-19022- 6	M1		1	
	25-19022- 7	M1		1	
	25-19022- 8	M1		1	
	25-19022- 9	M1		1	
	25-19022- 10	M1		1	
	25-19022- 11	M1		1	
	25-19022- 12	M1		1	
	25-19022- 13	M1		1	
	25-19022- 14	M1		1	
	25-19024- 5	M1	17 - 20	1	C-382
	25-19024- 6	M1	17 - 20	1	
	25-19025- 3	M1	17 - 11	6	A-22
	25-19025- 4	M1	17 - 11	6	
	25-19026- 3	M1	17 - 13	21	A-23
			17 -		
	25-19026- 4		17 - 13	21	
			17 -		
	25-19027- 3	M1	7 - 52	16	A-24
			17 - 31		
	25-19028- 3			8	
	25-19029- 1	M1		1	A-25
	25-19029- 3	M1		1	
	25-19029- 5			1	
	25-19029- 7			1	
	25-19030- 3		17 - 21	1	
	25-19030- 3C			1	
	25-19030- 4		17 - 21	1	
	25-19030- 4C			1	
	25-19032- 3			1	
	25-19032- 4			1	
	25-19033- 3			1	
	25-19033- 4			1	
	25-19033- 5			1	
	25-19033- 6			1	
	25-19033- 7			1	
	25-19033- 8			1	
	25-19033- 9			1	
	25-19033- 10			1	
	25-19033- 11			1	
	25-19033- 12			1	
	25-19033- 13			1	
	25-19033- 14			1	

STOCK	PART NUMBER	SOURCE CODE	FIGURE & INDEX NO.	QTY. PER A/C	MICROFILM INDEX
	25-19033-603			1	
	25-19034- 3			4	
	25-19034- 4			4	
	25-19035- 3			1	
	25-19035- 4			1	
	25-19035- 5			2	
	25-19035- 6			2	
	25-19035- 7			1	
	25-19035- 8			1	
	25-19035- 9			2	
	25-19035- 11			4	
	25-19035- 13			4	
	25-19035- 15			2	
	25-19035- 17			6	
	25-19035- 19			2	
	25-19035- 21			2	
	25-19035- 23			2	
	25-19035- 25			4	
	25-19035- 27			2	
	25-19035- 29			6	
	25-19035- 31			6	
	25-19035- 33			2	
	25-19035- 35			4	
	25-19036- 9			4	
	25-19036- 11			4	
	25-19036- 13			4	
	25-19037- 3			12	
	25-19038- 3			1	
	25-19038- 3C			1	
	25-19038- 4			1	
	25-19038- 4C			1	
	25-19039- 1			1	
	25-19039- 3			1	
	25-19040- 3			4	
	25-19040- 4			4	
	25-19041- 3		17 - 41	12	
	25-19042- 3		17 - 29	12	
	25-19042- 4		17 - 30	12	
	25-19043- 3		17 - 23	2	
	25-19043- 4		17 - 23	2	
	25-19043- 5		17 - 24	2	
	25-19043- 6		17 - 24	2	
	25-19043- 7		17 - 25	2	
	25-19043- 8		17 - 25	2	
	25-19043- 9		17 - 26	2	
	25-19043- 10		17 - 26	1	
	25-19043- 11		17 - 27	2	
	25-19043- 12		17 - 27	2	
	25-19043- 13		17 - 28	2	
	25-19043- 14		17 - 28	2	
	25-19044- 3		7 - 40	12	
	25-19044- 5		17 - 40	2	
	25-19044- 7			4	
	25-19045- 3			4	
	25-19046- 3			2	
	25-19046- 4			2	
	25-19046- 5			2	
	25-19046- 6			2	
	25-19046- 7			2	
	25-19046- 8			2	
	25-19046- 9			2	
	25-19046- 10			2	
	25-19046- 11			2	
	25-19046- 12			2	
	25-19047- 3		17 - 43	12	
	25-19047- 5		17 - 42	12	
	25-19048- 3			4	
	25-19048- 5			4	
	25-19051- 1			1	
	25-19051- 2			1	
	25-19052- 1			1	
	25-19052- 2			1	
	25-19052- 3			1	
	25-19052- 4			1	
	25-19052- 5			1	
	25-19052- 6			1	
	25-19052- 7			1	
	25-19052- 8			1	
	25-19052- 9			1	
	25-19052- 10			1	
	25-19052- 11			1	
	25-19052- 12			1	
	25-19052- 13			1	
	25-19052- 14			1	
	25-19052- 15			1	
	25-19052- 16			1	
	25-19052- 17			1	
	25-19052- 18			1	
	25-19052- 19			1	
	25-19052- 20			1	
	25-19052- 21			1	
	25-19052- 22			1	
	25-19052- 23			1	
	25-19052- 24			1	
	25-19052- 25			1	
	25-19052- 26			1	

STOCK	PART NUMBER	SOURCE CODE	FIGURE & INDEX NO.	QTY. PER A/C	MICROFILM INDEX
	25-19052- 27			1	
	25-19052- 28			1	
	25-19052- 29			1	
	25-19052- 30			1	
	25-19052- 31			1	
	25-19052- 32			1	
	25-19052- 33			1	
	25-19052- 34			1	
	25-19052- 35			1	
	25-19052- 36			1	
	25-19052- 37			1	
	25-19052- 38			1	
	25-19052- 39			3	
	25-19052- 40			3	
	25-19052- 41			1	
	25-19052- 42			1	
	25-19052- 43			1	
	25-19052- 44			1	
	25-19052- 45			3	
	25-19052- 46			3	
	25-19052- 49			1	
	25-19052- 50			1	
	25-19052- 51			1	
	25-19052- 52			1	
	25-19052- 53			1	
	25-19052- 54			1	
	25-19052- 55			1	
	25-19052- 56			1	
	25-19052- 57			2	
	25-19052- 59			1	
	25-19052- 60			1	
	25-19052- 61			1	
	25-19052- 62			1	
	25-19052- 63			1	
	25-19052- 64			1	
	25-19052- 65			1	
	25-19052- 66			1	
	25-19052- 67			1	
	25-19052- 68			1	
	25-19052- 69			8	
	25-19052- 71			4	
	25-19052- 73			4	
	25-19052- 75			2	
	25-19052- 77			8	
	25-19052- 79			6	
	25-19052- 81			4	
	25-19052- 83			12	
	25-19052- 85			18	
	25-19052- 87			2	
	25-19052- 89			1	
	25-19052- 90			1	
	25-19052- 91			1	
	25-19052- 92			1	
	25-19052- 93			1	
	25-19052- 94			1	
	25-19052- 95			1	
	25-19053- 1			1	
	25-19053- 2			1	
	25-19053- 3			1	
	25-19053- 4			1	
	25-19053- 5			1	
	25-19053- 6			1	
	25-19053- 7			2	
	25-19053- 9			2	
	25-19054- 3			1	
	25-19054- 4			1	
	25-19054- 5			1	
	25-19054- 6			1	
	25-19054- 7			1	
	25-19054- 8			1	
	25-19054- 9			1	
	25-19054- 10			1	
	25-19054- 11			1	
	25-19054- 12			1	
	25-19054- 13			1	
	25-19054- 14			1	
	25-19054- 15			1	
	25-19054- 16			1	
	25-19054- 17			1	
	25-19054- 18			1	
	25-19054- 20			1	
	25-19054- 21			1	
	25-19054- 22			1	
	25-19054- 23			1	
	25-19054- 24			1	
	25-19054- 25			1	
	25-19054- 26			1	
	25-19054- 27			1	
	25-19054- 28			1	
	25-19054- 29			1	
	25-19054- 30			1	
	25-19054- 31			1	
	25-19054- 32			1	
	25-19054- 33			1	
	25-19054- 34			1	
	25-19054- 35			1	

STOCK	PART NUMBER	SOURCE CODE	FIGURE & INDEX NO.	QTY. PER A/C	MICROFILM INDEX
	25-19054- 36			1	
	25-19054- 37			2	
	25-19054- 38			2	
	25-19054- 39			2	
	25-19054- 40			2	
	25-19054- 41			1	
	25-19054- 42			1	
	25-19054- 43			1	
	25-19054- 44			1	
	25-19054- 45			1	
	25-19054- 46			1	
	25-19054- 47			1	
	25-19054- 48			1	
	25-19054- 49			1	
	25-19054- 50			1	
	25-19054- 51			1	
	25-19054- 52			1	
	25-19054- 53			1	
	25-19054- 54			1	
	25-19054- 55			1	
	25-19054- 56			1	
	25-19054- 57			1	
	25-19054- 58			1	
	25-19054- 59			1	
	25-19054- 60			1	
	25-19054- 61			1	
	25-19054- 62			1	
	25-19054- 63			1	
	25-19054- 64			1	
	25-19054- 65			1	
	25-19054- 66			1	
	25-19054- 67			1	
	25-19054- 68			1	
	25-19054- 69			1	
	25-19054- 70			1	
	25-19054- 71			1	
	25-19054- 72			1	
	25-19054- 73			1	
	25-19054- 74			1	
	25-19054- 75			1	
	25-19054- 76			1	
	25-19054- 77			1	
	25-19054- 78			1	
	25-19054- 79			1	
	25-19054- 80			1	
	25-19054- 81			1	
	25-19054- 82			1	
	25-19054- 83			1	
	25-19054- 84			1	
	25-19054- 85			1	
	25-19054- 86			1	
	25-19054- 87			1	
	25-19054- 88			1	
	25-19054- 89			1	
	25-19054- 90			1	
	25-19054- 91			1	
	25-19054- 92			1	
	25-19054- 93			1	
	25-19054- 94			1	
	25-19054- 95			1	
	25-19054- 96			1	
	25-19054- 97			1	
	25-19054- 98			1	
	25-19054- 99			1	
	25-19054-100			1	
	25-19054-101			1	
	25-19054-102			1	
	25-19054-103			1	
	25-19054-104			1	
	25-19054-105			1	
	25-19054-106			1	
	25-19054-107			1	
	25-19054-108			1	
	25-19054-109			1	
	25-19054-110			1	
	25-19054-111			1	
	25-19054-112			1	
	25-19054-113			1	
	25-19054-114			1	
	25-19054-115			2	
	25-19054-116			2	
	25-19054-117			1	
	25-19054-118			1	
	25-19054-119			1	
	25-19054-120			1	
	25-19054-121			2	
	25-19054-122			2	
	25-19054-123			2	
	25-19054-124			2	
	25-19054-125			2	
	25-19054-126			2	
	25-19054-127			1	
	25-19054-128			1	
	25-19054-133			1	
	25-19054-134			1	
	25-19054-135			3	

STOCK	PART NUMBER	SOURCE CODE	FIGURE & INDEX NO.	QTY. PER A/C	MICROFILM INDEX
	25-19054-136			3	
	25-19054-137			1	
	25-19054-138			1	
	25-19054-139			1	
	25-19054-140			1	
	25-19054-141			1	
	25-19054-142			1	
	25-19054-143			2	
	25-19054-145			2	
	25-19054-147			2	
	25-19054-149			1	
	25-19054-150			1	
	25-19055- 1			1	
	25-19055- 2			1	
	25-19055- 3			1	
	25-19055- 4			1	
	25-19055- 5			1	
	25-19055- 6			1	
	25-19055- 7			1	
	25-19055- 8			1	
	25-19055- 9			1	
	25-19055- 10			1	
	25-19055- 11			1	
	25-19055- 12			1	
	25-19055- 13			1	
	25-19055- 14			1	
	25-19055- 15			1	
	25-19055- 16			1	
	25-19055- 17			1	
	25-19055- 18			1	
	25-19055- 19			1	
	25-19055- 20			1	
	25-19055- 21			1	
	25-19055- 22			1	
	25-19055- 23			1	
	25-19055- 24			1	
	25-19056- 3			2	
	25-19056- 3F			6	
	25-19056- 4			2	
	25-19056- 4F			6	
	25-19056- 5			2	
	25-19056- 6			2	
	25-19056- 7			1	
	25-19056- 8			1	
	25-19056- 9			1	
	25-19056- 10			1	
	25-19060- 3			12	
	25-19061- 3			2	
	25-19062- 3			2	
	25-19062- 5			2	
	25-19062- 7			2	
	25-19500-301		2 - 2 7 -	1	E-179
	25-19500-302		2 - 2 7 -	1	
	25-19501- 7	M1	7 - 22	1	E-180 E-181 E-182
	25-19501- 8	M1	7 - 22	1	
	25-19501- 9	M1	7 - 24	1	
	25-19501- 10	M1	7 - 24	1	
	25-19501- 11	M1	7 - 25	1	
	25-19501- 12	M1	7 - 25	1	
	25-19501- 13	M1		4	
	25-19501- 15	M1		1	
	25-19501- 16	M1		1	
	25-19501- 17			2	
	25-19501- 18			2	
	25-19501- 29	M1	7 - 10	1	
	25-19501- 30		7 - 10	1	
	25-19501- 31	M1	7 -	1	
	25-19501- 32	M1	7 -	1	
	25-19501- 35			1	
	25-19501- 36			1	
	25-19501- 39	M1		4	
	25-19501- 41	M1		2	
	25-19501- 42	M1		2	
	25-19501- 43			2	
	25-19501- 44			2	
	25-19501- 55	M1		24	
	25-19501- 57	M1		12	
	25-19501- 59	M1		8	
	25-19501- 61	M1		16	
	25-19501- 63	M1		16	
	25-19501- 65	M1		12	
	25-19501- 67	M1		1	
	25-19501- 68	M1		1	
	25-19501- 69	M1		1	
	25-19501- 70	M1		1	
	25-19501- 83	M1		1	
	25-19501- 84	M1		1	
	25-19501- 85	M1		1	
	25-19501- 86	M1		1	
	25-19501- 89	M1		2	
	25-19501- 93	M1		1	
	25-19501- 94	M1		1	
	25-19501- 95	M1		1	

STOCK	PART NUMBER	SOURCE CODE	FIGURE & INDEX NO.	QTY. PER A/C	MICROFILM INDEX
	29-10901- 96	M1		1	
	29-10901- 97	M1		1	
	29-10901- 98	M1		1	
	29-10901- 99	M1		1	
	29-10901-100	M1		1	
	29-10901-107	M1		1	
	29-10901-108	M1		1	
	29-10901-109	M1		1	
	29-10901-110	M1		1	
	29-10901-113	M1		2	
	29-10901-114	M1		2	
	29-10901-115	M1		1	
	29-10901-116	M1		1	
	29-10901-117	M1		2	
	29-10901-118	M1		2	
	29-10901-119	M1		2	
	29-10901-120	M1		2	
	29-10901-121			2	
	29-10901-122			2	
	29-10901-127	M1		1	
	29-10901-128	M1		1	
	29-10901-129	M1		1	
	29-10901-130	M1		1	
	29-10901-193	M1	7 - 11	1	
	29-10901-194	M1	7 - 11	1	
	29-10901-195	M1		1	
	29-10901-196	M1		1	
	29-10901-197	M1		1	
	29-10901-198	M1		1	
	29-10901-141	M1		1	
	29-10901-142	M1		1	
	29-10901-143	M1		1	
	29-10901-144	M1		1	
	29-10901-145	M1		1	
	29-10901-146	M1		1	
	29-10901-147	M1		1	
	29-10901-148	M1		1	
	29-10901-149	M1		1	
	29-10901-150	M1		1	
	29-10901-151	M1		1	
	29-10901-152	M1		1	
	29-10901-153	M1		1	
	29-10901-154	M1		1	
	29-10901-157	M1		1	
	29-10901-158	M1		1	
	29-10901-159	M1		1	
	29-10901-160	M1		1	
	29-10901-161	M1		1	
	29-10901-162	M1		1	
	29-10901-163	M1	7 - 9	1	
	29-10901-164	M1	7 - 9	1	
	29-10901-165	M1	7 - 13	1	
	29-10901-166	M1	7 - 13	1	
	29-10901-167		7 - 12	1	
	29-10901-168	M1	7 - 12	1	
	29-10901-169	M1	7 -	1	
	29-10901-170	M1	7 -	1	
	29-10901-171	M1	7 - 3	1	
	29-10901-172	M1	7 - 3	1	
	29-10901-173	M1	7 -	1	
	29-10901-174	M1	7 -	1	
	29-10901-175	M1		1	
	29-10901-176	M1		1	
	29-10901-177	M1		1	
	29-10901-178	M1		1	
	29-10901-179	M1		4	
	29-10901-180	M1		4	
	29-10901-181	M1		4	
	29-10901-182	M1		4	
	29-10901-183	M1		4	
	29-10901-184	M1		4	
	29-10901-185	M1		1	
	29-10901-186	M1		1	
	29-10901-187	M1		1	
	29-10901-188	M1		1	
	29-10901-193	M1		1	
	29-10901-194	M1		1	
	29-10901-195	M1		1	
	29-10901-196	M1		1	
	29-10901-197	M1		2	
	29-10901-198	M1		2	
	29-10901-199	M1		2	
	29-10901-200	M1		2	
	29-10901-201	M1		1	
	29-10901-202	M1		1	
	29-10901-203	M1		2	
	29-10901-204	M1		2	
	29-10901-205	X1		1	
	29-10901-206	X1		1	
	29-10901-207	X1		2	
	29-10901-208	X1		2	
	29-10901-209			1	
	29-10901-210			1	
	29-10901-211			1	
	29-10901-212			1	
	29-10901-213			2	

STOCK	PART NUMBER	SOURCE CODE	FIGURE & INDEX NO.	QTY. PER A/C	MICROFILM INDEX
	29-10901-214			2	
	29-10901-215			2	
	29-10901-216			2	
	29-10901-217			0	
	29-10901-223			1	
	29-10901-224			1	
	29-10901-225			1	
	29-10901-226			1	
	29-10901-227			1	
	29-10901-228			1	
	29-10901-301	X1	7 -	1	
	29-10901-302	X1	7 -	1	
	29-10902- 3	X1	6 - 8	1	C-389
	29-10902- 4	X1	6 - 8	1	
	29-10902- 5	X1	6 - 8	2	
	29-10902- 6	X1	6 - 8	2	
	29-10903- 3F	X1		11	
	29-10903- 4F	X1		11	
	29-10904- 3	X1	6 - 19	6	C-389
	29-10905- 1	P1	9 - 16	6	C-388
			9 - 39		
			9 - 46		
			6 -		
	29-10906- 1	P1	9 - 31	1	C-387
			6 -		
	29-10906- 2	P1	9 - 31	1	
			6 -		
	29-10906- 3	P1	9 - 14	2	
			9 - 49		
			6 -		
	29-10906- 4	P1	9 - 14	2	
			5 - 49		
			6 -		
	29-10907- 1	M1	7 - 1	2	
	29-10907- 2	M1	7 - 1	2	
	29-10907 3			3	
	29-10907- 4			3	
	29-10907- 5	M1	7 - 2	1	
	29-10907- 6	M1	7 - 2	1	
	29-10907- 7	M1		2	
	29-10907- 8	M1		2	
	29-10907- 9	M1		1	
	29-10907- 10	M1		1	
	29-10908- 3			3	C-380
	29-10908- 4			3	
	29-10908- 7	X1		3	
	29-10908- 8	X1		3	
	29-10908- 9			3	
	29-10908- 10			3	
	29-10909- 5	M1		1	
	29-10909- 6	M1		1	
	29-10911- 3	M1	6 - 5	36	A-209
	29-10911- 5	M1	21 - 19	60	
			21 - 23		
	29-10912- 3	M1	21 - 24	24	
	29-10913- 11			1	D-339
	29-10913- 12			1	
	29-10913- 13			1	
	29-10913- 14			1	
	29-10913- 15			1	
	29-10913- 16			1	
	29-10913- 17			2	
	29-10913- 18			2	
	29-10913-301			1	
	29-10913-302			1	
	29-10913-303			2	
	29-10913-304			2	
	29-10914- 15	M1		1	E-103 E-104
	29-10914- 16	M1		1	
	29-10914- 17	M1		1	
	29-10914- 18	M1		1	
	29-10914- 19	M1		1	
	29-10914- 20	M1		1	
	29-10914- 21	M1		1	
	29-10914- 22	M1		1	
	29-10914- 23	M1		1	
	29-10914- 24	M1		1	
	29-10914- 25	M1		1	
	29-10914- 26	M1		1	
	29-10914- 27	M1		1	
	29-10914- 28	M1		1	
	29-10914- 29	M1		1	
	29-10914- 30	M1		1	
	29-10914- 49	M1		1	
	29-10914- 50	M1		1	
	29-10914- 51	M1		1	
	29-10914- 52	M1		1	
	29-10914- 53	M1		1	
	29-10914- 54	M1		1	
	29-10914- 55	M1		1	
	29-10914- 56	M1		1	
	29-10914- 57	M1		1	
	29-10914- 58	M1		1	
	29-10914- 59	M1		1	
	29-10914- 60	M1		1	
	29-10914- 61	M1		1	

STOCK	PART NUMBER	SOURCE CODE	FIGURE & INDEX NO.	QTY. PER A/C	MICROFILM INDEX
	25-19514- 62	M1		1	
	25-19514- 63	M1		1	
	25-19514- 64	M1		1	
	25-19514- 65	M1		1	
	25-19514- 66	M1		1	
	25-19514- 69	M1		1	
	25-19514- 70	M1		1	
	25-19514- 71	M1		1	
	25-19514- 72	M1		1	
	25-19514- 73			1	
	25-19514- 74			1	
	25-19514- 75	M1		2	
	25-19514- 76	M1		2	
	25-19514- 77			2	
	25-19514- 78			2	
	25-19514- 79			2	
	25-19514- 80			2	
	25-19514- 81			2	
	25-19514- 82			2	
	25-19514- 83			3	
	25-19514- 84			3	
	25-19515- 3	M1	7 - 26	1	XA-171
	25-19515- 4	M1	7 - 26	1	
	25-19519- 3	M1	5 - 47	1	C-391
	25-19519- 4	M1	5 - 47	1	
	25-19519- 5	M1	5 - 17	1	
	25-19519- 6	M1	5 - 17	1	
	25-19520- 3	X1		1	E-186
	25-19520- 4	X1		1	
	25-19520- 5	X1		1	
	25-19520- 6	X1		1	
	25-19520- 17			1	
	25-19520- 18	X1		1	
	25-19520- 19	X1		1	
	25-19520- 20	X1		1	
	25-19520- 21	X1		1	
	25-19520- 22	X1		1	
	25-19520- 23	X1		1	
	25-19520- 24	X1		1	
	25-19520-301	P1	7 - 18	1	
	25-19520-302	P1	7 - 18	1	
	25-19521- 7	M1		1	
	25-19521- 8	M1		1	
	25-19522- 3	M1		1	E-187
	25-19522- 4	M1		1	
	25-19522- 5	M1		1	
	25-19522- 6	M1		1	
	25-19522- 7	M1		1	
	25-19522- 8	M1		1	
	25-19522- 9	M1		1	
	25-19522- 10	M1		1	
	25-19522- 11	M1		1	
	25-19522- 12	M1		1	
	25-19522- 13	M1		1	
	25-19522- 14	M1		1	
	25-19523- 3		7 - 44	2	A-210
	25-19523- 5	M1	7 -	2	
	25-19523- 7	M1	7 -	2	
	25-19523- 9			2	
	25-19523- 11			2	
	25-19523- 13			2	
	25-19524- 3	M1	7 -	2	
	25-19524- 5	M1	7 -	2	
	25-19524- 7	M1	7 - 9	2	
			17 - 10		
	25-19524- 9		17 -	2	
	25-19524- 11	M1	17 -	2	
	25-19525- 4	M1		3	A-26
	25-19525- 5	M1	7 - 6	6	
	25-19525- 6	M1	7 - 6	6	
	25-19526- 3		7 - 23	12	A-27
			7 -		
			17 - 14		
	25-19527- 3			6	A-28
	25-19527- 5	M1	7 - 8	12	
	25-19528- 3	M1	7 - 39	4	A-29
	25-19531- 3			1	
	25-19531- 4			1	
	25-19532- 3			4	
	25-19533- 3			6	
	25-19536- 3		7 - 33	5	
	25-19536- 4		7 - 34	5	
	25-19537- 3		7 - 41	24	
	25-19538- 3			2	
	25-19538- 4			2	
	25-19539- 3		7 - 35	1	
	25-19539- 4		7 - 35	1	
	25-19539- 5			1	
	25-19539- 6			1	
	25-19540- 3		7 - 42	12	
	25-19540- 5		7 - 43	12	
	25-19541- 3		7 - 27	1	
	25-19541- 4		7 - 27	1	
	25-19541- 5		7 - 28	1	
	25-19541- 6		7 - 28	1	
	25-19541- 7		7 - 29	1	

STOCK	PART NUMBER	SOURCE CODE	FIGURE & INDEX NO.	QTY. PER A/C	MICROFILM INDEX
	25-19541- 8		7 - 29	1	
	25-19541- 9		7 - 30	1	
	25-19541- 10		7 - 30	1	
	25-19541- 11		7 - 31	2	
	25-19541- 12		7 - 32	2	
	25-19543- 3			12	
	25-19544- 3			8	
	25-19544- 5			8	
	25-19551- 1			1	
	25-19551- 2			1	
	25-19552- 1			1	
	25-19552- 2			1	
	25-19552- 3			1	
	25-19552- 4			1	
	25-19552- 5			1	
	25-19552- 6			1	
	25-19552- 7			1	
	25-19552- 8			1	
	25-19552- 9			1	
	25-19552- 10			1	
	25-19552- 11			1	
	25-19552- 12			1	
	25-19552- 13			1	
	25-19552- 14			1	
	25-19552- 15			16	
	25-19552- 17			4	
	25-19552- 19			2	
	25-19552- 20			2	
	25-19552- 21			2	
	25-19552- 22			2	
	25-19552- 23			2	
	25-19552- 24			2	
	25-19552- 25			2	
	25-19552- 26			2	
	25-19552- 27			1	
	25-19552- 28			1	
	25-19552- 29			1	
	25-19552- 30			1	
	25-19552- 31			1	
	25-19552- 32			1	
	25-19552- 33			1	
	25-19552- 34			1	
	25-19552- 35			1	
	25-19552- 36			1	
	25-19552- 37			1	
	25-19552- 38			1	
	25-19552- 39			1	
	25-19552- 40			1	
	25-19552- 41			1	
	25-19552- 42			1	
	25-19552- 43			1	
	25-19552- 44			1	
	25-19552- 45			2	
	25-19552- 46			2	
	25-19552- 47			1	
	25-19552- 48			1	
	25-19552- 49			2	
	25-19552- 50			2	
	25-19552- 51			1	
	25-19552- 52			1	
	25-19552- 53			1	
	25-19552- 54			1	
	25-19552- 55			1	
	25-19552- 56			1	
	25-19552- 57			1	
	25-19552- 58			1	
	25-19552- 59			1	
	25-19552- 60			1	
	25-19552- 61			1	
	25-19552- 62			1	
	25-19552- 63			1	
	25-19552- 64			1	
	25-19552- 65			2	
	25-19552- 66			2	
	25-19552- 67			2	
	25-19552- 68			2	
	25-19552- 70			2	
	25-19552- 71			2	
	25-19552- 72			2	
	25-19552- 73			2	
	25-19552- 74			2	
	25-19552- 75			1	
	25-19552- 76			1	
	25-19552- 77			1	
	25-19552- 78			1	
	25-19552- 79			1	
	25-19552- 80			1	
	25-19552- 81			1	
	25-19552- 82			1	
	25-19552- 83			1	
	25-19552- 84			1	
	25-19552- 85			2	
	25-19552- 87			4	
	25-19552- 88			4	
	25-19552- 91			1	
	25-19552- 92			1	

STOCK	PART NUMBER	SOURCE CODE	FIGURE & INDEX NO.	QTY. PER A/C	MICROFILM INDEX
	25-19552- 93			1	
	25-19552- 94			1	
	25-19552- 95			1	
	25-19552- 96			1	
	25-19552- 97			1	
	25-19552- 98			1	
	25-19553- 1			1	
	25-19553- 2			1	
	25-19553- 3			1	
	25-19553- 4			1	
	25-19553- 5			1	
	25-19553- 6			1	
	25-19553- 7			2	
	25-19553- 9			1	
	25-19553- 10			1	
	25-19553- 11			1	
	25-19553- 12			1	
	25-19554- 3			1	
	25-19554- 4			1	
	25-19554- 5			1	
	25-19554- 6			1	
	25-19554- 7			1	
	25-19554- 8			1	
	25-19554- 9			1	
	25-19554- 10			1	
	25-19554- 11			1	
	25-19554- 12			1	
	25-19554- 13			1	
	25-19554- 14			1	
	25-19554- 15			2	
	25-19554- 16			1	
	25-19554- 17			1	
	25-19554- 19			1	
	25-19554- 20			1	
	25-19554- 21			1	
	25-19554- 22			1	
	25-19554- 23			1	
	25-19554- 24			1	
	25-19554- 25			1	
	25-19554- 26			1	
	25-19554- 27			1	
	25-19554- 28			1	
	25-19554- 29			1	
	25-19554- 30			1	
	25-19554- 31			1	
	25-19554- 32			1	
	25-19554- 33			1	
	25-19554- 34			1	
	25-19554- 35			1	
	25-19554- 36			1	
	25-19554- 37			1	
	25-19554- 38			1	
	25-19554- 39			1	
	25-19554- 40			1	
	25-19554- 41			1	
	25-19554- 42			1	
	25-19554- 47			1	
	25-19554- 48			1	
	25-19554- 53			3	
	25-19554- 54			3	
	25-19554- 55			3	
	25-19554- 56			3	
	25-19554- 57			1	
	25-19554- 58			1	
	25-19554- 59			4	
	25-19554- 60			4	
	25-19554- 61			2	
	25-19554- 62			2	
	25-19554- 63			2	
	25-19554- 65			1	
	25-19554- 66			1	
	25-19554- 67			1	
	25-19554- 68			1	
	25-19554- 69			2	
	25-19554- 71			2	
	25-19554- 73			2	
	25-19554- 75			3	
	25-19554- 76			2	
	25-19554- 77			1	
	25-19554- 78			1	
	25-19554- 79			1	
	25-19554- 80			1	
	25-19554- 81			1	
	25-19554- 82			1	
	25-19554- 83			1	
	25-19554- 84			1	
	25-19554- 85			1	
	25-19554- 86			1	
	25-19554- 87			1	
	25-19554- 88			1	
	25-19554- 89			1	
	25-19554- 90			1	
	25-19554- 91			1	
	25-19554- 92			1	
	25-19554- 93			1	
	25-19554- 94			1	

STOCK	PART NUMBER	SOURCE CODE	FIGURE & INDEX NO.	QTY. PER A/C	MICROFILM INDEX
	25-19554- 95			1	
	25-19554- 96			1	
	25-19554- 97			1	
	25-19554- 98			1	
	25-19554- 99			1	
	25-19554-100			1	
	25-19554-101			1	
	25-19554-102			1	
	25-19554-103			1	
	25-19554-104			1	
	25-19554-105			1	
	25-19554-106			1	
	25-19554-107			1	
	25-19554-108			1	
	25-19554-109			1	
	25-19554-110			1	
	25-19554-111			1	
	25-19554-112			1	
	25-19554-113			1	
	25-19554-114			1	
	25-19554-115			1	
	25-19554-116			1	
	25-19554-117			1	
	25-19554-118			1	
	25-19554-119			1	
	25-19554-120			1	
	25-19554-121			1	
	25-19554-122			1	
	25-19558- 1			1	
	25-19558- 2			1	
	25-19558- 3			1	
	25-19558- 4			1	
	25-19558- 5			1	
	25-19558- 6			1	
	25-19558- 7			1	
	25-19558- 8			1	
	25-19559- 3			1	
	25-19559- 4			1	
	25-21000-301	*	37 -	1	E-188
	25-21000-303	*	38 -	1	
	25-21000-305			1	
	25-21002- 3	M1		1	
	25-21002- 4	M1		1	
	25-21002- 5	M1		1	
	25-21002- 6	M1		2	
	25-21002- 7	M1		2	
	25-21002- 9	M1		8	
	25-21002- 11	M1		4	
	25-21002- 13	M1		4	
	25-21002- 15	M1		4	
	25-21002- 17	M1		2	
	25-21002- 19	M1	37 - 16 38 - 16		
	25-21002- 21		37 - 18 38 - 18	2	
	25-21002- 23	M1		2	
	25-21002- 25	M1		4	
	25-21002- 27	M1		4	
	25-21002- 29	M1		2	
	25-21002- 31	M1		2	
	25-21002- 33	M1		1	
	25-21002- 34	M1		1	
	25-21002- 35	M1		1	
	25-21002- 37	M1		1	
	25-21002- 39	M1		1	
	25-21002- 41	M1		1	
	25-21002- 43	M1		2	
	25-21002- 44	M1		2	
	25-21002- 45	M1		2	
	25-21002- 47	M1		2	
	25-21002- 49			1	
	25-21002- 50			1	
	25-21002- 51		37 - 38 -	12	
	25-21002-301		37 - 7	1	
R82MDA-	25-21003- 3	P1	37 - 12 38 - 12	1	
R82MDA-	25-21003- 4		37 - 13 38 - 13	1	
	25-21004- 1	X2	37 - 19 38 - 19	1	E-190
	25-21004- 3	X1		1	
	25-21005- 1			2	
	25-21005- 3	M1		2	
	25-21005- 5	M1		2	
	25-21005- 6	M1		2	
	25-21006- 1			1	
	25-21006- 2			1	
	25-21006- 3	M1		1	
	25-21006- 4	M1		1	
	25-21006- 5			1	
	25-21006- 6			1	
	25-21007- 1	M1		1	
	25-21007- 2	M1		1	
	25-21007- 3	M1		1	
	25-21007- 4	M1		1	

STOCK	PART NUMBER	SOURCE CODE	FIGURE & INDEX NO.	QTY. PER A/C	MICROFILM INDEX
	25-21007- 5	M1		1	
	25-21007- 6	M1		1	
	25-21007- 7	M1		1	
	25-21007- 8	M1		1	
	25-21007- 9	M1		2	
	25-21008- 1	X2		1	E-191
	25-21008- 2	X2		1	
	25-21008- 5	X1		2	
	25-21008- 6	X1		2	
	25-21008-301	X2	37 - 29	1	
	25-21008-302	X2	37 - 29	1	
	25-21009- 3	M1		2	
	25-21009- 4	M1		2	
	25-21009- 5	M1		2	
	25-21009- 6	M1		2	
	25-21010- 3	M1		2	
	25-21010- 4	M1		2	
	25-21011- 3	M1		2	
	25-21011- 4	M1		2	
	25-21012- 3	M1		1	
	25-21012- 4	M1		1	
	25-21013- 4	M1		2	
	25-21014- 1	M1		1	
	25-21014- 2	M1		1	
	25-21014- 3	M1		1	
	25-21014- 4	M1		1	
	25-21014- 7	M1		4	
	25-21015- 1	M1		1	
	25-21015- 2	M1		1	
	25-21015- 3	M1		1	
	25-21015- 4	M1		1	
	25-21015- 5	M1		2	
	25-21016- 3	M1		2	
	25-21016- 4	M1		2	
R82MDA-	25-21017- 1	M1		1	
	25-21017- 2	M1		1	
	25-21017- 3	M1		1	
	25-21017- 4	M1		1	
	25-21017- 5	M1		2	
	25-21018- 3	M1		2	
	25-21018- 4	M1		2	
	25-21019- 1	M1		1	
	25-21019- 2	M1		1	
	25-21019- 3	M1		1	
	25-21019- 4	M1		1	
	25-21019- 5	M1		2	
	25-21020- 1	X1		2	
	25-21020- 3	X1		2	
	25-21020- 5	M1		2	
	25-21020- 7	M1		2	
	25-21020- 9	X1		2	
	25-21020- 11	M1		4	
	25-21022- 1	X1		2	
	25-21022- 3	X1		2	
	25-21022- 5	M1		2	
	25-21022- 7	M1		2	
	25-21022- 8	M1		2	
	25-21023- 1	M1		2	
	25-21023- 3	M1		2	
	25-21023- 5	M1		2	
	25-21023- 7	M1		2	
	25-21023- 9	M1		2	
	25-21023- 11	M1		2	
	25-21023- 55		47 - 11	1	
	25-21024- 3	X1		4	
	25-21025- 1	M1		1	
	25-21025- 2	M1		1	
	25-21025- 7	M1		1	
	25-21025- 8	M1		1	
	25-21025- 11	M1		1	
	25-21025- 12	M1		1	
	25-21025- 17	M1		2	
	25-21025- 23	M1		2	
	25-21025- 25	M1		1	
	25-21025- 26	M1		1	
	25-21025- 33	M1		2	
	25-21025- 35	M1		2	
	25-21025- 37	M1		2	
	25-21025- 39	M1		2	
	25-21025- 41	M1		2	
	25-21025- 43	M1		2	
	25-21025- 45	M1		2	
	25-21025- 47	M1		1	
	25-21025- 48	M1		1	
	25-21025- 49	M1		1	
	25-21025- 50	M1		1	
	25-21025- 51	M1		2	
	25-21025- 52	M1		2	
	25-21025- 53	M1		1	
	25-21025- 54	M1		1	
	25-21025- 55	M1		2	
	25-21025-301	M1	37 -	1	
	25-21025-302	M1	37 -	1	
R82MDA-	25-21026- 1	M	37 - 10	2	
	25-21026- 3	M1		2	
	25-21026- 5	M1		2	
	25-21026- 7	M1		4	
	25-21026- 11	M1		2	
	25-21026- 13	M1		2	
	25-21026- 15	M1		2	
	25-21026- 17	M1		2	
	25-21027- 3F	X1		1	
	25-21028- 3F	X1		6	
	25-21029- 3P			3	XA-85
	25-21030- 1	X1		1	C-394
	25-21030- 3	X1		1	
	25-21030- 5	X1		1	
	25-21030- 7	X1		2	
	25-21032- 3F	X1		2	
	25-21033- 1	X1		2	
	25-21033- 3	X1		2	
	25-21033- 5	M1		2	
	25-21033- 7	M1		4	
	25-21034- 1	M1		2	
	25-21034- 5	M1		2	
	25-21034- 7	M1		2	
	25-21034- 9	M1		2	
	25-21034- 11	M1		2	
	25-21034-301	M1		2	
	25-21035- 1	M1		2	
	25-21035- 3	X1		1	
	25-21035- 4	X1		1	
	25-21035- 5	M1		2	
	25-21035- 7	M1		2	
	25-21035- 9	M1		2	
	25-21035- 11	X1		1	
	25-21035- 12	X1		1	
	25-21035- 13	M1		2	
	25-21035- 15	M1		2	
	25-21035-301	M1		2	
	25-21037- 3	M1		1	
	25-21037- 4	M1		1	
	25-21037- 5	M1		1	
	25-21037- 6	M1		1	
	25-21038- 7			1	
	25-21038- 8			1	
	25-21038- 9			2	
	25-21038- 10			2	
	25-21038-301		37 - 1	1	
			38 - 1		
	25-21038-302		37 - 2	1	
			38 - 2		
	25-21039- 3	M		10	
	25-21039- 5	X1		2	
	25-21039- 7	X1		2	
	25-21039- 9	X1		2	
	25-21039- 11	X1		4	
	25-21040- 3	M		8	
	25-21040- 5	X1		2	
	25-21040- 7	X1		2	
	25-21040- 9	X1		4	
	25-21041- 3	M		12	
	25-21041- 5	X1		4	
	25-21041- 6	X1		4	
	25-21041- 7	X1		4	
	25-21042- 3	M1		2	
	25-21042- 4	M1		2	
	25-21043- 5	M1	39 -	1	
	25-21043- 11	M1	140 - 27	1	
	25-21043- 77			1	
	25-21044- 3	M1		4	
	25-21044- 4	M1		2	
	25-21045- 3	P1		1	E-192
	25-21045- 4	P1		1	
	25-21045- 5	X2	37 - 30	1	
	25-21045- 6	X2	37 - 31	1	
	25-21046- 3			1	E-193
	25-21046- 4	P1		1	
	25-21046- 5	X2	37 - 32	1	
	25-21046- 6		37 - 33	1	
	25-21048- 5		37 - 34	1	C-395
	25-21048- 6	M1	37 - 35	1	
	25-21049- 1	P1		2	
	25-21049- 3	M1		2	
	25-21049- 5	M1		2	
	25-21049- 7	M1		2	
	25-21049- 9	M1		2	
	25-21049- 11	M1		4	
	25-21049- 13	M1		2	
	25-21050- 1	P1	38 - 7	1	
	25-21050- 3	M1		1	
	25-21050- 4	M1		1	
	25-21050- 5	M1		1	
	25-21050- 6	M1		1	
	25-21050- 7	M1		2	
	25-21050- 9	M1		4	
	25-21050- 11	M1		8	
	25-21050- 13	M1		4	
	25-21050- 15	M1		4	
	25-21050- 17	M1		4	
	25-21050- 19	M1		2	
	25-21050- 21	M1		2	

STOCK	PART NUMBER	SOURCE CODE	FIGURE & INDEX NO.	QTY. PER A/C	MICROFILM INDEX
	25-21050- 23	M1		2	
	25-21050- 25	M1		4	
	25-21050- 27	M1		4	
	25-21050- 29	M1		2	
	25-21051- 1	M1		2	
	25-21051- 3	M1		2	
	25-21052- 3	X2	38 - 29	1	
	25-21052- 4	X2	38 - 30	1	
	25-21052- 5	X2	38 - 31	1	
	25-21052- 6	X2	38 - 32	1	
	25-21053- 1	M1		2	
	25-21053- 3	M1		2	
	25-21053- 5	M1		2	
	25-21053- 7	M1		4	
	25-21053- 9	M1		4	
	25-21054- 1	X2	38 - 33	1	
	25-21054- 2	X2	38 - 33	1	
	25-21054- 3	X1		1	
	25-21054- 4	X1		1	
	25-21055- 1	P1	38 - 10	2	
	25-21055- 3	M1		2	
	25-21055- 5	M1		2	
	25-21055- 7	M1		4	
	25-21055- 9	M1		2	
	25-21055- 11	M1		2	
	25-21055- 13	M1		2	
	25-21055- 15	M1		2	
	25-21055- 17	M1		2	
	25-21056- 1	X1		2	
	25-21056- 3	X1		2	
	25-21056- 5	X1		2	
	25-21056- 7	M1		2	
	25-21056- 9	M1		2	
	25-21056- 11	M1		2	
	25-21056- 13	M1		4	
	25-21071- 1	M1		1	
	25-21071- 2	M1		1	
	25-21071- 3	M1		1	
	25-21071- 4	M1		1	
	25-21071- 5	M1		2	
	25-21071- 7	M1		2	
	25-21072- 3		37 - 36	1	
			38 - 34		
	25-21073- 1			2	
	25-21073- 3			2	
	25-21073- 5			2	
	25-21073- 7			2	
	25-21073- 9			4	
	25-21073- 11			2	
	25-22002- 3	M1		2	
	25-22002- 4	M1		1	
	25-22002- 5	M1		1	
	25-22002- 6	M1		1	
	25-22002- 7	M1		2	
	25-22002- 9	M1		2	
	25-22002- 11	M1		1	
	25-22002- 12	M1		1	
	25-22002- 13	M1		1	
	25-22002- 14	M1		1	
	25-22002- 15	M1		1	
	25-22002- 16	M1		1	
	25-22002- 17	M1		1	
	25-22002- 18	M1		1	
	25-22002- 19	M1		1	
	25-22002- 20	M1		1	
	25-22002- 21	M1		1	
	25-22002- 22	M1		1	
	25-22002- 25	M1		2	
	25-22002- 27	M1		2	
	25-22002- 31	M1		1	
	25-22002- 32	M1		1	
	25-22002- 33	M1		1	
	25-22002- 34	M1		1	
	25-22002- 37	M1		1	
	25-22002- 38	M1		1	
	25-22002- 39	M1	37 -		
	25-22002- 40	M1	37 -	1	
	25-22002-301	X1	37 -	1	
	25-22002-302	X1	37 -	1	
	25-22003- 4	X1		1	
	25-22003- 5	M1		4	
	25-22003- 6	M1		10	
	25-22003- 7			2	
	25-22003- 8			1	
	25-22003-301			2	
	25-22003-302			2	
	25-22005- 1	M1	37 - 47	1	
	25-22005- 2	M1	37 - 48	1	
	25-22005- 5	M1		1	
	25-22005- 6	M1		1	
	25-22005- 7	M		1	
	25-22005- 8	M		1	
	25-22005- 9	M1		2	
	25-22005- 19	M1		1	
	25-22005- 20	M1		1	
	25-22005- 21	M1		1	

STOCK	PART NUMBER	SOURCE CODE	FIGURE & INDEX NO.	QTY. PER A/C	MICROFILM INDEX
	25-22005- 23	M1		4	
	25-22006- 9	M1		2	
	25-22006- 19	M1		2	
	25-22006- 21	M1	37 - 43	1	
	25-22006- 22	M1	37 - 43	1	
	25-22006- 23	M1		2	
	25-22006- 25	M1		2	
	25-22006- 27	M1		2	
	25-22006- 28	M1		2	
	25-22006-301	M1	37 - 37	1	
	25-22006-302	M1	37 - 38	1	
	25-22008- 3F	X1		1	
	25-22008- 4F	X1		1	
	25-22010- 3	P1	37 - 45	1	
	25-22010- 4	P1	37 - 46	1	
	25-22011- 3	M1		2	XA-18
	25-22012- 3	M1		1	
	25-22012- 4	M1		1	
	25-22012- 5	M1		1	
	25-22012- 6	M1		1	
	25-23000-303		39 -	1	
	25-23001- 7		39 - 4	1	
	25-23001- 9			1	
	25-23001-303		39 -	1	
	25-23001-305			1	
	25-23002- 3	M1		1	E-194 E-195 .
	25-23002- 5	M1		1	
	25-23002- 6	M1		1	
	25-23002- 7	M1		1	
	25-23002- 8	M1		1	
	25-23002- 9	M1		1	
	25-23002- 10	M1		1	
	25-23002- 11	M1		1	
	25-23002- 14	M1		1	
	25-23002- 15	M1		1	
	25-23002- 16	M1		1	
	25-23002- 17	M1		1	
	25-23002- 18	M1		1	
	25-23002- 19	M1	39 - 12	1	
	25-23002- 20	M1	39 - 12	1	
	25-23002- 21	M1	39 - 13	1	
	25-23002- 33	M1		1	
	25-23002- 34	M1		1	
	25-23002- 35	M1		1	
	25-23002- 36	M1		1	
	25-23002- 37	M1		1	
	25-23002- 38	M1		1	
	25-23002- 39	M1		1	
	25-23002- 40	M1		1	
	25-23002- 41	M1		1	
	25-23002- 43	M1		1	
	25-23002- 45	M1		2	
	25-23002- 47	M1		1	
	25-23002- 49	M1		1	
	25-23002- 51	M1		1	
	25-23002- 53	M1		2	
	25-23002- 57	M1		1	
	25-23002- 58	M1		1	
	25-23002- 59	M1		1	
	25-23002- 60	M1		1	
	25-23002- 61	M1		2	
	25-23002- 63	M1	39 - 14	1	
	25-23002- 64	M1	39 - 14	1	
	25-23002- 65	M1		1	
	25-23002- 66	M1		1	
	25-23002- 67	M1		1	
	25-23002- 68	M1		1	
	25-23002- 69	M1		1	
	25-23002- 70	M1		1	
	25-23002- 71	M1		1	
	25-23002- 72	M1		1	
	25-23002- 73	M1		1	
	25-23002- 74	M1		1	
	25-23002- 75	M1		1	
	25-23002- 76	M1		1	
	25-23002- 77	M1		1	
	25-23002- 78	M1		1	
	25-23002- 79	M1		6	
	25-23002- 81			1	
	25-23002- 83			2	
	25-23002- 85			1	
	25-23002- 87			1	
	25-23002- 89			1	
	25-23002- 91		39 - 37	1	
	25-23002- 93		39 - 38	1	
	25-23002- 95		39 - 33	1	
	25-23002-303		39 -	1	
	25-23002-305			1	
	25-23003- 1	A1	39 -	1	E-196
R82MDA-	25-23003- 5	P1	39 - 24	1	
	25-23004- 7	P1	39 - 22	1	E-197
	25-23005- 5	M1		1	E-198
	25-23005- 9	M1		1	
	25-23005- 11	M1		2	
	25-23005- 13	M1		1	
	25-23005- 15	M1		2	

STOCK	PART NUMBER	SOURCE CODE	FIGURE & INDEX NO.	QTY. PER A/C	MICROFILM INDEX
	25-23005- 17	M1		2	
	25-23005- 19	M1		1	
	25-23005- 21	M1		1	
	25-23005- 23			2	
	25-23005- 25			2	
	25-23005- 26			2	
	25-23005- 27		39 - 25	1	
	25-23005- 29			1	
	25-23005-303		39 -	1	
	25-23006- 1		39 -	1	E-199
	25-23006- 5			1	
	25-23006- 6			1	
	25-23006- 7			1	
	25-23006- 9	M1		1	
	25-23006- 11	M1		1	
	25-23006- 13	M1		1	
	25-23006- 17			1	
	25-23007- 3			1	
	25-23007- 7			1	
	25-23007- 11	M1		1	
	25-23007- 12	M1		1	
	25-23007- 19	M1		2	
	25-23007- 31	M1		1	
	25-23007- 35	M1		1	
	25-23007- 39	M		2	
	25-23007- 41	M1		1	
	25-23007- 43	M1		1	
	25-23007- 45	M1		1	
	25-23007- 47	M1		1	
	25-23007- 67	M1		1	
	25-23007- 68	M1		1	
	25-23007- 75	M1		2	
	25-23007- 77			1	
	25-23007- 79		39 -	1	
	25-23007- 81			2	
	25-23007- 83			1	
	25-23007- 85			1	
	25-23007-303		39 -	1	
	25-23008- 3	M1		4	
	25-23009- 1	M1		1	
	25-23009- 3	M1		1	
	25-23009- 5	M1		1	
	25-23009- 9	M1		1	
	25-23009- 13	M1		1	
	25-23009- 15	M1		1	
	25-23009- 16	M1		1	
	25-23010- 1	M1		1	
	25-23010- 3	M1		1	
	25-23010- 5	M1		1	
	25-23010- 7	M1		1	
	25-23010- 8	M1		1	
	25-23010- 9	M1		2	
	25-23010- 11	M1		2	
	25-23010- 13	M1		2	
	25-23010- 15	M1		2	
	25-23010- 17	M1		2	
	25-23010- 19	M1		2	
	25-23010- 21	M1		1	
	25-23010- 23	M1		1	
	25-23010- 25	M1		2	
	25-23010- 27	M1		2	
	25-23010- 29	M1		1	
	25-23010- 31	M1		1	
	25-23010- 33	M1		2	
	25-23011- 1	M1		1	
	25-23011- 7	M1		1	
	25-23011- 9			1	
	25-23011- 11			1	
	25-23012- 1	M1	39 - 21	1	
	25-23012- 3	M1		1	
	25-23013- 1	M1	39 - 19	1	
	25-23013- 3	M1		1	
	25-23014- 1	M1		1	E-200
	25-23014- 3	M1		1	
	25-23014- 5	M1		1	
	25-23014- 7	M1		1	
	25-23014- 9	M1		1	
	25-23014- 15			1	
	25-23014-301			1	
	25-23015- 1	M1		1	
	25-23015- 5			2	
	25-23015- 7			1	
	25-23016- 1	M1		3	E-201
	25-23016- 3	M1		1	
	25-23016- 5	M1		1	
	25-23016- 7			1	
	25-23016- 9	M1		3	
	25-23017- 1	M1	39 - 6	1	C-396
	25-23017- 2	M1	39 - 7	1	
	25-23017- 9	M1		1	
	25-23017- 10	M1		1	
	25-23017- 11	M1	39 -	1	
	25-23017- 13	M1	39 -	2	
	25-23018- 5	M1		1	D-336
	25-23018- 6	M1		1	
	25-23018- 7	M1		2	
	25-23018- 19	M1		1	
	25-23018- 21			1	
	25-23018-301	M1		1	
	25-23020- 7	M1		1	
	25-23020- 8	M1		1	
	25-23020- 13	M1		1	
	25-23020- 15	M1		1	
	25-23020- 16	M1		1	
	25-23020- 17	M1		1	
	25-23020- 19	M1		1	
	25-23020- 23	M1		2	
	25-23020- 29	M1		1	
	25-23020- 30	M1		1	
	25-23020- 33	M1		1	
	25-23020- 35	M1		1	
	25-23020- 37	M1		1	
	25-23020- 39	M1		1	
	25-23020-301	M1		1	
	25-23021- 1	M1		1	
	25-23021- 3	M1		1	
	25-23021- 5	M1		1	
	25-23021- 7	M1		1	
	25-23021- 9	M1		1	
	25-23022- 1	M1		1	
	25-23022- 3	M1		1	
	25-23022- 5	M1		1	
	25-23022- 7	M1		1	
	25-23023- 1	M1		1	
	25-23023- 3	M1		1	
	25-23023- 5	M1		1	
	25-23023- 7	M1		1	
	25-23023- 11	M1		1	
	25-23024- 1	M1		1	
	25-23024- 3	M1		1	
	25-23024- 5	M1		1	
	25-23024- 7	M1		1	
	25-23024- 9	M1		1	
	25-23024- 11	M1		1	
	25-23024- 13	M1		1	
	25-23024- 15	M1		1	
	25-23025- 1	M1		1	
	25-23025- 3	M1		1	
	25-23025- 5	M1		1	
	25-23026- 3	M1		1	
	25-23027- 3	M1		1	
	25-23028- 1	M1		1	
	25-23028- 3			1	
	25-23028- 5	M1		1	
	25-23028- 7	M1		2	
	25-23028- 9	M1		1	
	25-23029- 1	M1		1	
	25-23029- 3	M1		1	
	25-23029- 4	M1		1	
	25-23029- 5	M1		1	
	25-23029- 7	M1		1	
	25-23029- 9	M1		1	
	25-23029-301			1	
	25-23030- 3F	X1		1	
	25-23031- 3F	X1		1	
	25-23032- 5F	X1		2	XA-87
R82MDA-	25-23033- 5	P1	39 - 2	2	A-212
	25-23034- 1	X1		1	
	25-23034- 3	X1		1	
	25-23034- 5	X1		1	
	25-23035- 1	M1	39 - 29	1	
	25-23035- 5	M1		1	
	25-23035- 7	M1		1	
	25-23035- 9	M1		1	
	25-23035- 13	M1		1	
	25-23035- 15			2	
	25-23035- 17			2	
	25-23035-301	M1	39 - 29	1	
	25-23036- 7	M1	39 - 28	1	XA-57
	25-23037- 1	P1		1	
	25-23038- 1	P1		1	
	25-23038- 3	X1		1	
	25-23039- 1	M1	39 - 26	1	
	25-23039- 3	M1		1	
	25-23041- 3F	X1		1	
R82MDA-	25-23042- 3	P1	39 - 1	2	A-213
	25-23043- 3	M1		1	A-30
	25-23044- 3	M1		1	A-31
	25-23045- 3	M1	39 - 23	1	
	25-23047- 3	P1	39 - 27	1	
	25-23040- 3		39 -	1	
	25-23051- 3	X1	39 - 23	1	
	25-23052- 3			2	
	25-24000- 1		40 -	1	
	25-24002- 1	P1	40 - 1	1	E-203
	25-24002- 3	M1		1	
	25-24002- 7	M1		1	
	25-24002- 15	M1		1	
	25-24002- 17	M1		1	
	25-24002- 18	M1		1	
	25-24002- 19	M1	40 - 12	1	
	25-24002- 21	X1		1	

STOCK	PART NUMBER	SOURCE CODE	FIGURE & INDEX NO.	QTY. PER A/C	MICROFILM INDEX
	25-24002- 23			1	
	25-24004- 1	M1		1	E-204
	25-24004- 3	M1		1	
	25-24004- 5	M1		1	
	25-24004- 9	M1		1	
	25-24004- 10	M1		1	
	25-24004- 15	M1		2	
	25-24004- 17	M1		1	
	25-24004- 18	M1		1	
	25-24004- 19	M1		1	
	25-24004- 20	M1		1	
	25-24004- 21	M1		1	
	25-24004- 22	M1		1	
	25-24004- 23	M1		1	
	25-24004- 24	M1		1	
	25-24004- 25	M1		1	
	25-24004- 26	M1		1	
	25-24004-301			1	
	25-24005- 3			1	E-205
	25-24005- 7			1	
	25-24005- 9			1	
	25-24005- 11			1	
	25-24005- 15			1	
	25-24005- 17			1	
	25-24005- 19			1	
	25-24005- 21	M1		1	
	25-24005- 23	M1		1	
	25-24005- 25	M1		1	
	25-24005- 27	M1		1	
	25-24005- 29	M1		1	
	25-24005- 31	M1		1	
	25-24005- 33	M1		1	
	25-24005- 35	M1		1	
	25-24005- 37	M1		1	
	25-24005- 39	M1		1	
	25-24005- 41	M1		1	
	25-24005- 43	M1		1	
	25-24005- 44	M1		1	
	25-24005- 47	M1		1	
	25-24005- 49	M1		1	
	25-24005- 55	M1		1	
	25-24005- 57	M1		1	
	25-24005- 59	M1		1	
	25-24005- 61	M1		1	
	25-24005- 63	M1		1	
	25-24005- 65	M1		1	
	25-24005- 67	M1		1	
	25-24005- 69	M1		1	
	25-24005- 71	M1		1	
	25-24005- 73	M1		1	
	25-24005- 75	M1		1	
	25-24005- 77	M1		1	
	25-24005- 79	M1		1	
	25-24005- 81	M1		1	
	25-24005- 87	M1		1	
	25-24005- 91	M1		1	
	25-24005- 93	M1		1	
	25-24005- 95			1	
	25-24005- 97	M1		1	
	25-24005- 99	M1		1	
	25-24005-101	M1		1	
	25-24005-103			1	
	25-24005-105			1	
R82MDA-	25-24006- 1	P1	40 - 4	1	
	25-24006- 3	X1		1	
	25-24006- 5	X1		1	
	25-24006- 7	X1		1	
	25-24006- 9	X1		1	
	25-24007- 1	M1	40 -	1	
	25-24007- 3	M1		1	
	25-24007- 4	M1		1	
	25-24007- 5	M1		1	
	25-24007- 7	M1		1	
	25-24007- 15	M1		1	
	25-24007- 17	M1		1	
	25-24007- 21	M1	40 - 10	1	
	25-24007- 23			1	
	25-24007- 25	M1		1	
	25-24007- 27	M1		1	
	25-24007- 29	M1		1	
	25-24007- 30	M1		1	
	25-24007- 31	M1		2	
	25-24008- 1	M1	40 -	1	
	25-24008- 7	M1	40 - 7	2	
	25-24008- 9	M1		1	
	25-24008- 11	M1		1	
	25-24008- 13	M1		1	
	25-24008- 15	M1		1	
	25-24008- 17	M1		1	
	25-24008- 19	M1		1	
	25-24008- 21	M1		1	
	25-24009- 3	M1	39 - 17	4	
	25-24010- 3	M1	40 - 13	1	
	25-24011- 5	M1		2	XA-5
	25-24013- 1		40 -	1	
	25-24013- 3			1	

STOCK	PART NUMBER	SOURCE CODE	FIGURE & INDEX NO.	QTY. PER A/C	MICROFILM INDEX
	25-24013- 5			1	
	25-24013- 7			2	
	25-24013- 9		40 - 10	1	
	25-24013- 11			1	
	25-24013- 13			1	
	25-24013- 15			1	
	25-24013- 17			1	
	25-24015- 3	M1	40 - 14	1	
	25-24016- 3F	X1		1	
	25-24017- 1	P1	140 - 25	1	
	25-24017- 3	X1		1	
	25-24023- 3	M1	40 - 15	1	B-396
	25-24024- 1		40 -	1	
	25-24024- 3		40 - 7	1	
	25-24024- 5			1	
	25-24024- 7			1	
	25-24024- 9			1	
	25-24024- 11			1	
	25-24024- 13			1	
	25-24024- 15			1	
	25-24024- 17			1	
	25-24024- 19			1	
	25-24024- 20			1	
	25-24024- 21			2	
	25-24025- 3	M1		2	
	25-24025- 3C	M1		2	
	25-30010- 1	*	41 -	1	H-196
	25-30010- 3	A	41 -	1	
	25-30010-301	*	41 -	1	
	25-30010-303	A	41 -	1	
	25-30010-305		41 -	1	
	25-30010-307		41 -	1	
	25-30011- 1	P1	41 - 1	1	E-206 E-207
			43 -		
	25-30011- 3	X1	43 -	1	
	25-30011- 5	X1	43 -	1	
	25-30011- 7	M1		1	
	25-30011- 9	M1		1	
	25-30011- 11	M1		1	
	25-30011- 13	M1		1	
	25-30011- 19	M	43 - 23	2	
	25-30011- 21	M	43 - 48	1	
	25-30011- 23	M1	43 - 25	1	
	25-30011- 25	M1		2	
	25-30011- 27	M1		1	
	25-30011- 29	M1		1	
	25-30011- 30	M1		1	
	25-30011- 31	M1		1	
	25-30011- 32	M1		1	
	25-30011- 33	M1		1	
	25-30011- 34	M1		1	
	25-30011- 36	M1		1	
	25-30011- 37	M1		2	
	25-30011- 41			1	
	25-30011- 42			1	
	25-30011- 43			1	
	25-30011- 44			1	
	25-30011- 45		43 - 50	1	
	25-30011- 47			1	
	25-30011- 49			1	
	25-30011- 51			1	
	25-30011-301	X1	43 -	1	
R82MDA-	25-30011-303	P1	41 - 1	1	
			43 -		
	25-30011-305		41 - 1	1	
			43 -		
	25-30011-307		43 -	1	
	25-30012- 1	M1		1	E-208
	25-30012- 3	M1		1	
	25-30012- 5	M1		2	
	25-30012- 7	M1		1	
	25-30012- 9	M1		1	
	25-30012- 11	M1		1	
	25-30012- 13	M1		1	
	25-30012- 14	M1		1	
	25-30012- 15	M1		1	
	25-30012- 17	M1		1	
	25-30012- 18	M1		1	
	25-30012- 19			1	
	25-30012- 20			1	
	25-30012- 21	M1		1	
	25-30012- 23			1	
	25-30012- 25			1	
	25-30012- 27			1	
	25-30012- 28			1	
	25-30012- 29			1	
	25-30012- 31			1	
	25-30012- 32			1	
	25-30012- 33			1	
	25-30012- 34			1	
	25-30012- 35			1	
	25-30012- 36			1	
	25-30012- 37			1	
	25-30012- 38			1	
	25-30012- 39			1	
	25-30012- 40			1	

STOCK	PART NUMBER	SOURCE CODE	FIGURE & INDEX NO.	QTY. PER A/C	MICROFILM INDEX
	25-30012- 41			1	
	25-30012- 42			1	
	25-30012-301	M1		1	
	25-30012-303			1	
	25-30013- 1	M1		1	E-209
	25-30013- 9	M1		1	
	25-30013- 10	M1		1	
	25-30013- 11	M1		1	
	25-30013- 13	M1		1	
	25-30013- 15	M1		1	
	25-30013-301	M1		1	
	25-30014- 1	M1		1	E-210
	25-30014- 3	M1		1	
	25-30014- 5	M1		1	
	25-30014- 7	M1		1	
	25-30014- 13	M1		2	
	25-30014- 17	M1		1	
	25-30014- 19	M1		1	
	25-30014- 21	M1		1	
	25-30014-301	M1		1	
	25-30015- 1	M1		1	E-211
	25-30015- 3	M1		1	
	25-30015- 5	M1		1	
	25-30015- 7	M1		2	
	25-30015- 9	M1		1	
	25-30015- 11	M1		1	
	25-30015- 13	M1		1	
	25-30015- 15	M1		1	
	25-30015- 16	M1		1	
	25-30015- 17	M1		1	
	25-30015- 23			2	
	25-30015- 25			2	
	25-30015- 27			2	
	25-30015- 29			2	
	25-30016- 1	M1		1	D-337
	25-30016- 3	M1		1	
	25-30016- 5	M1		2	
	25-30016- 6	M1		2	
	25-30016- 7	M1		1	
	25-30016- 8	M1		1	
	25-30016- 11	M1		1	
	25-30016- 13	M1		1	
	25-30016- 15	M1		1	
	25-30016- 17			1	
	25-30016- 19	M1		2	
	25-30016- 21			3	
	25-30016- 22	M1		3	
	25-30016- 23	M1		1	
	25-30016- 25	M1		2	
	25-30016- 26	M1		2	
	25-30016- 27	M1		1	
	25-30016- 29	M1		1	
	25-30016- 31	M1		1	
	25-30016- 32	M1		1	
	25-30016- 33	M1		1	
	25-30016- 34	M1		1	
	25-30016- 35	M1		1	
	25-30016- 37	M1		2	
	25-30016- 39	M1		1	
	25-30016- 41	M1		1	
	25-30016- 42	M1		1	
	25-30016- 43	M1		1	
	25-30016- 44	M1		1	
	25-30016- 47	M1		1	
	25-30016- 49	M1		1	
	25-30016- 51	M1		1	
	25-30016- 52	M1		1	
	25-30016- 53	M1		2	
	25-30016- 54	M1		1	
	25-30016- 55	M1		1	
	25-30016- 56	M1		1	
	25-30016- 57	M1		1	
	25-30016- 59	M1		1	
	25-30016- 60	M1		1	
	25-30016- 61			2	
	25-30016- 62			2	
	25-30016- 63			1	
	25-30016-301	M1		1	
	25-30016-303			1	
	25-30016-305	M1		1	
	25-30022- 3F			4	E-214
	25-30024- 3		43 - 20	1	E-215
	25-30024- 4	X2	43 - 21	1	
	25-30024- 5		43 - 20	1	
	25-30024- 6		43 - 21	1	
	25-30025- 3F	X1		1	
	25-30025- 4F	X1		1	
	25-30026- 3F	X1		1	E-217
	25-30026- 4F	X1		1	
	25-30031- 1	X2	43 - 26	1	E-220
	25-30031- 2	X2	43 - 27	1	
	25-30031- 3	X1		1	
	25-30031- 4	X1		1	
	25-30032- 3	M1	43 - 1	1	A-214
	25-30032- 4	M1	43 - 2	1	
	25-30033- 1	M1		1	C-400
	25-30033- 3	M1		1	
	25-30033- 4	M1		1	
	25-30033- 5	M1		1	
	25-30033- 6	M1		1	
	25-30033- 7	M1		1	
	25-30034- 1		43 - 13	1	B-398
	25-30034- 3	X1		1	
	25-30035- 3F	X1		3	
	25-30035- 4F	X1		3	
	25-30037- 3	M1		1	E-221
	25-30037- 4	M1		1	
	25-30038- 3	M1		1	E-222
	25-30038- 4	M1		1	
R82MDA-	25-30040- 1	P1	41 - 2	1	
	25-30040- 5	M1		2	
	25-30041- 3		41 - 9	3	C-403
	25-30041- 4	X2	41 - 10	3	
	25-30045- 3	M1		1	
	25-30045- 5	M1		1	
	25-30045- 7	M1		2	
	25-30045- 9	M1		1	
	25-30045- 10	M1		1	
	25-30045- 11	M1		1	
	25-30045- 12	M1		1	
	25-30045- 13	M1		1	
	25-30045- 14	M1		1	
	25-30048- 3	M1	41 -	1	
	25-30048- 5	M1		1	
	25-30048- 7	M1		2	
	25-30048- 9	M1		1	
	25-30048- 10	M1		1	
	25-30048- 11	M1		1	
	25-30048- 13		41 - 12	1	
	25-30048- 14	M	41 - 13	1	
	25-30048- 15		41 - 14	1	
	25-30048- 17	M1		1	
	25-30048- 18	M1		1	
	25-30048- 19			1	
	25-30048- 20	M1		1	
	25-30048- 21	M1		1	
	25-30048- 23	M1		1	
	25-30048- 24	M1		1	
	25-30049- 3F	X1		1	E-226
	25-30049- 4F	X1		1	
	25-30049- 5F			1	
	25-30049- 6F			1	
	25-30050- 3		41 - 5	1	E-227
	25-30050- 4	X2	41 - 6	1	
	25-30050- 5			1	
	25-30050- 6			1	
	25-30053- 5		43 - 28	2	A-218
	25-30054- 3	X2	43 - 40	1	E-228
	25-30054- 4	X2	43 - 41	1	
R82MDA-	25-30056- 3	P	44 - 20	4	A-219
	25-30057- 3	M1	43 - 14	1	
	25-30058- 3	M1	43 - 11	1	
	25-30059- 3	M1	43 - 5	2	
	25-30060- 3	M1	43 - 7	2	
	25-30061- 1	M1	43 - 9	1	
	25-30061- 3	M1		1	
	25-30062- 3	M	41 - 11	1	
	25-30063- 1	M1	43 -	1	C-405
	25-30063- 2	M1	43 -	1	
	25-30063- 3	M1		1	
	25-30063- 4	M1		1	
	25-30063- 5	M1		1	
	25-30063- 7	M1		1	
	25-30063- 8	M1		1	
	25-30063- 9	M1		2	
	25-30063- 10	M1		2	
	25-30063- 11			1	
	25-30063- 13			1	
	25-30063- 15			1	
	25-30064- 1	M1	41 - 15	1	
	25-30064- 2	M1	41 - 16	1	
	25-30064- 3	M1	41 - 23	1	
	25-30064- 4	M1		1	
	25-30064- 5	M1	41 - 18	2	
	25-30065- 3	M1		1	B-401
	25-30065- 4	M1		1	
	25-30066- 1		41 - 7	1	B-402
	25-30066- 2		41 - 8	1	
	25-30066- 3	M1		1	
	25-30066- 4	M1		1	
	25-30066- 5	M1		2	
	25-30067- 3	M1		1	B-403
	25-30067- 4	M1		1	
	25-30068- 1	M1	43 - 16	1	
	25-30068- 3	X1		1	
	25-30070- 1	[illegible]	43 -	1	D-338
	25-30070- 2	M1	43 -	1	
	25-30070- 3	M1	43 -	1	
	25-30070- 5			1	
	25-30070- 6			1	
	25-30070- 9		43 - 54	1	
	25-30070- 10		43 - 55	1	

STOCK	PART NUMBER	SOURCE CODE	FIGURE & INDEX NO.	QTY. PER A/C	MICROFILM INDEX
	25-30070- 11		43 - 49	1	
	25-30070- 13	M1		1	
	25-30070- 15			2	
	25-30070- 16			2	
	25-30072- 3			1	E-229
	25-30072- 5	M1		1	
	25-30072- 7	M1		1	
	25-30072- 8			1	
	25-30072- 9	M1		1	
	25-30072- 11	M1		1	
	25-30072- 13	M1		1	
	25-30072- 14	M1		1	
	25-30072- 15	M1		1	
	25-30072- 17	M1		1	
	25-30072- 19	M1		1	
	25-30072- 20	M1		1	
	25-30072- 21	M1		1	
	25-30073- 5	M1		1	
	25-30075- 3	M1	43 - 42	1	E-230
	25-30075- 4		43 - 42	1	
	25-30075- 5	M1	43 -	1	
	25-30075- 6		43 -	1	
	25-30075- 7	M1		2	
	25-30075- 8	M1		2	
	25-30075- 9	M1		1	
	25-30075- 10	M1		1	
	25-30075- 11	M1		1	
	25-30075- 12	M1		1	
	25-30075- 13	M1	43 - 44	2	
	25-30075- 15	M1	43 - 45	2	
	25-30076- 3	M1		2	E-231
	25-30076- 4	M1		2	
	25-30077- 3	X1	43 - 19	2	
	25-30078- 3	M1		1	D-339
	25-30078- 4	M1		1	
	25-30079- 1	M1	43 - 22	1	E-232
	25-30079- 3	M1		1	
	25-30079- 4	M1		1	
	25-30079- 5	M1		1	
	25-30079- 6	M1		1	
	25-30079- 7	M1		1	
	25-30079- 9	M1		1	
	25-30079- 11	M1		1	
	25-30080- 1	M1		1	
	25-30080- 3	M1		1	
	25-30080- 5	M1		2	
	25-30081- 1	M1		1	XA-88
	25-30081- 9			2	
	25-30081- 11			1	
	25-30081- 13			1	
	25-30081-301			1	
	25-30082- 1		41 - 4	2	B-406
R82MDA-	25-30082- 3		43 - 29	2	
	25-30083- 3	M1		2	
	25-30084- 3	M1		1	A-227
	25-30084- 4	M1		1	
	25-30084- 5			1	
	25-30084- 6			1	
	25-30085- 3	M1		2	A-32
	25-30086- 1	M1	43 - 24	2	A-228
	25-30086- 3	M1		2	
	25-30086- 5	M1		2	
	25-30087- 3	M1		2	A-229
	25-30087- 5	M1		2	
	25-30088- 1	M1	43 - 56	2	
	25-30088- 3	M1		2	
	25-30088- 5	M1		2	
	25-30088- 7	M1		2	
	25-30088- 8	M1		2	
	25-30088- 9	M1		2	
	25-30088- 10	M1		2	
	25-30089- 1	X1		2	
	25-30089- 3	X1		2	
	25-30090- 1	M1		1	
	25-30090- 3	M1		1	
	25-30090- 5	M1		1	
	25-30091- 1		43 -	1	
	25-30092- 3		43 - 35	1	
	25-30093- 3		43 - 34	1	
	25-30094- 3		43 - 39	1	
	25-31000- 1		44 -	1	H-197
	25-31000-301		44 -	1	
	25-31000-303		44 -	1	
	25-31000-305			1	
	25-31001- 1		44 -	1	
	25-31001-301		44 -	1	
	25-31001-303		44 -	1	
	25-31001-305			1	
	25-31002- 1	X	44 - 19	1	E-233 E-234
			45 -		
	25-31002-301	X	44 - 19	1	
			45 -		
	25-31002-303			1	
	25-31003- 1	X2	45 - 61	1	E-235 THRU
					E-239
			46 -		

STOCK	PART NUMBER	SOURCE CODE	FIGURE & INDEX NO.	QTY. PER A/C	MICROFILM INDEX
	25-31003- 3	M1		1	
	25-31003- 9	M1		1	
	25-31003- 11	M1		1	
	25-31003- 15	M1		1	
	25-31003- 17	M1		1	
	25-31003- 19	M1		1	
	25-31003- 23	M1		1	
	25-31003- 25	M1		1	
	25-31003- 27	M1		1	
	25-31003- 29	M1		1	
	25-31003- 31	M1		1	
	25-31003- 33	M1		1	
	25-31003- 35	M1		1	
	25-31003- 37	M1		1	
	25-31003- 41	M1		1	
	25-31003- 43	M1		1	
	25-31003- 45	M1		1	
	25-31003- 47	M1		1	
	25-31003- 49	M1		1	
	25-31003- 51			1	
	25-31003- 53	M1		1	
	25-31003- 55			1	
	25-31003- 57	M1		1	
	25-31003- 59	M1		1	
	25-31003- 61	M1		1	
	25-31003- 63	M1		1	
	25-31003- 65	M1		1	
	25-31003- 67			1	
	25-31003- 69			1	
	25-31003- 73	M1		1	
	25-31003- 75	M1		1	
	25-31003- 79	M1		4	
	25-31003- 81	M1		1	
	25-31003- 83	M1		1	
	25-31003- 85	M1		1	
	25-31003- 87	M1		1	
	25-31003- 89	M1		1	
	25-31003- 93	M1		1	
	25-31003- 95	M1		1	
	25-31003- 97	M1		1	
	25-31003-1001			1	
	25-31003-1003			1	
	25-31003-1005			1	
	25-31003-1007			1	
	25-31003-1009			1	
	25-31003-101	M1		1	
	25-31003-1011			1	
	25-31003-1013			1	
	25-31003-1017			1	
	25-31003-1019			1	
	25-31003-1023			1	
	25-31003-1025			1	
	25-31003-1027			1	
	25-31003-1029			1	
	25-31003-103	M1		1	
	25-31003-1035			2	
	25-31003-1037			1	
	25-31003-1039			1	
	25-31003-105	M1		1	
	25-31003-109	M1		1	
	25-31003-115	M1		1	
	25-31003-117	M1		2	
	25-31003-119	M1		1	
	25-31003-121	M1		1	
	25-31003-123	M1		1	
	25-31003-127	M1		1	
	25-31003-133	M1		1	
	25-31003-137	M1		1	
	25-31003-147	M1		1	
	25-31003-153	M1		2	
	25-31003-157	M1		2	
	25-31003-159	M1		1	
	25-31003-161	M1		1	
	25-31003-163	M1		1	
	25-31003-165	M1		1	
	25-31003-167	M1		1	
	25-31003-169	M1		1	
	25-31003-171	M1		1	
	25-31003-175	M1		1	
	25-31003-177	M1		1	
	25-31003-179	M1		1	
	25-31003-181	M1		1	
	25-31003-183	M1		1	
	25-31003-185	M1		1	
	25-31003-187	M1		1	
	25-31003-189	M1		1	
	25-31003-191	M1		1	
	25-31003-193	M1		1	
	25-31003-195	M1		1	
	25-31003-197	M1		1	
	25-31003-199	M1		1	
	25-31003-201	M1		1	
	25-31003-203	M1		1	
	25-31003-205	M1		1	
	25-31003-207	M1		1	
	25-31003-211	M1		1	

STOCK	PART NUMBER	SOURCE CODE	FIGURE & INDEX NO.	QTY. PER A/C	MICROFILM INDEX
	25-31003-213	M1		1	
	25-31003-215	M1		1	
	25-31003-217	M1		1	
	25-31003-219	M1		1	
	25-31003-221	M1		1	
	25-31003-223	M1		1	
	25-31003-225	M1		1	
	25-31003-227	M1		1	
	25-31003-229	M1		1	
	25-31003-231	M1		1	
	25-31003-233	M1		1	
	25-31003-235	M1		1	
	25-31003-237	M1		1	
	25-31003-239	M1		1	
	25-31003-241	M1		1	
	25-31003-243	M1		2	
	25-31003-245	M1		2	
	25-31003-247	M1		1	
	25-31003-249	M1		1	
	25-31003-251	M1		1	
	25-31003-253	M1		1	
	25-31003-255	M1		1	
	25-31003-257	M1		1	
	25-31003-259	M1		1	
	25-31003-261	M1		1	
	25-31003-263	M1		1	
	25-31003-265	M1		1	
	25-31003-267	M1		1	
	25-31003-269	M1		1	
	25-31003-271	M1		1	
	25-31003-273	M1		1	
	25-31003-275	M1		1	
	25-31003-277	M1		1	
	25-31003-279	M1		1	
	25-31003-281	M1		1	
	25-31003-283	M1		1	
	25-31003-285	M1		1	
	25-31003-287	M1		1	
	25-31003-289	M1		1	
	25-31003-291	M1		1	
	25-31003-293	M1		1	
	25-31003-295	M1		1	
	25-31003-297	M1		1	
	25-31003-299	M1		1	
	25-31003-301	X2	45 - 61 46 -	1	
	25-31003-303		45 - 61 46 -	1	
	25-31003-305			1	
	25-31003-401	M1		1	
	25-31003-403	M1		1	
	25-31003-405	M1		1	
	25-31003-407	M1		1	
	25-31003-409	M1		1	
	25-31003-411	M1		1	
	25-31003-413	M1		2	
	25-31003-415	M1		1	
	25-31003-417	M1		1	
	25-31003-419	M1		1	
	25-31003-421	M1		1	
	25-31003-423	M1		1	
	25-31003-425	M1		1	
	25-31003-427	M1		1	
	25-31003-429	M1		1	
	25-31003-431	M1		1	
	25-31003-433	M1		1	
	25-31003-437	M1		1	
	25-31003-439	M1		1	
	25-31003-441	M1		1	
	25-31003-443	M1		1	
	25-31003-445	M1		1	
	25-31003-447	M1		1	
	25-31003-449	M1		1	
	25-31003-451	M1		1	
	25-31003-453	M1		1	
	25-31003-455	M1		1	
	25-31003-457	M1		1	
	25-31003-459	M1		1	
	25-31003-461	M1		1	
	25-31003-467	M1		2	
	25-31003-469	M1		1	
	25-31003-471	M1		1	
	25-31003-473	M1		1	
	25-31003-475	M1		1	
	25-31003-477	M1		1	
	25-31003-479	M1		1	
	25-31003-481	M1		1	
	25-31003-483			2	
	25-31003-485			1	
	25-31003-487			1	
	25-31003-491			1	
	25-31003-495			1	
	25-31003-497			1	
	25-31003-499			1	
	25-31004- 1	X	45 - 62	1	E-240 THRU E-244

STOCK	PART NUMBER	SOURCE CODE	FIGURE & INDEX NO.	QTY. PER A/C	MICROFILM INDEX
	25-31004- 1		47 -		
	25-31004- 3	M1		1	
	25-31004- 5	M1		1	
	25-31004- 9	M1		1	
	25-31004- 11	M1		1	
	25-31004- 15	M1		1	
	25-31004- 17	M1		11	
	25-31004- 19	M1		1	
	25-31004- 23	M1		1	
	25-31004- 25	M1		1	
	25-31004- 27	M1		1	
	25-31004- 29	M1		1	
	25-31004- 31	M1		1	
	25-31004- 33	M1		1	
	25-31004- 35	M1		1	
	25-31004- 37	M1		1	
	25-31004- 39	M1		1	
	25-31004- 41	M1		1	
	25-31004- 43	M1		1	
	25-31004- 45	M1		1	
	25-31004- 47	M1		1	
	25-31004- 49	M1		1	
	25-31004- 53	M1		1	
	25-31004- 57	M1		1	
	25-31004- 59	M1		1	
	25-31004- 61	M1		1	
	25-31004- 63	M1		1	
	25-31004- 65	M1		1	
	25-31004- 69			1	
	25-31004- 73	M1		1	
	25-31004- 75	M1		1	
	25-31004- 79	M1		1	
	25-31004- 81	M1		1	
	25-31004- 83	M1		1	
	25-31004- 85	M1		1	
	25-31004- 87	M1		1	
	25-31004- 89	M1		1	
	25-31004- 93	M1		1	
	25-31004- 95	M1		1	
	25-31004- 97	M1		1	
	25-31004-1001			1	
	25-31004-1003			1	
	25-31004-1007			1	
	25-31004-1009			1	
	25-31004-101	M1		1	
	25-31004-1011			1	
	25-31004-1013			1	
	25-31004-1015			1	
	25-31004-1017			1	
	25-31004-1019			1	
	25-31004-1023			1	
	25-31004-1025			1	
	25-31004-103	M1		1	
	25-31004-105	M1		1	
	25-31004-1075			2	
	25-31004-1077			1	
	25-31004-1079			1	
	25-31004-109	M1		1	
	25-31004-115	M1		1	
	25-31004-117	M1		2	
	25-31004-119	M1		1	
	25-31004-121	M1		1	
	25-31004-123	M1		1	
	25-31004-127	M1		1	
	25-31004-133	M1		1	
	25-31004-137	M1		1	
	25-31004-147	M1		1	
	25-31004-153	M1		2	
	25-31004-157	M1		2	
	25-31004-159	M1		1	
	25-31004-161	M1		1	
	25-31004-163	M1		1	
	25-31004-165	M1		1	
	25-31004-167	M1		1	
	25-31004-169	M1		1	
	25-31004-171	M1		1	
	25-31004-173	M1		1	
	25-31004-175	M1		1	
	25-31004-177	M1		1	
	25-31004-179	M1		1	
	25-31004-181	M1		1	
	25-31004-183	M1		1	
	25-31004-193	M1		1	
	25-31004-195	M1		1	
	25-31004-197	M1		1	
	25-31004-199	M1		1	
	25-31004-201	M1		1	
	25-31004-203	M1		1	
	25-31004-205	M1		1	
	25-31004-207	M1		1	
	25-31004-211	M1		1	
	25-31004-213	M1		1	
	25-31004-215	M1		1	
	25-31004-217	M1		1	
	25-31004-219	M1		1	
	25-31004-221	M1		1	

STOCK	PART NUMBER	SOURCE CODE	FIGURE & INDEX NO.	QTY. PER A/C	MICROFILM INDEX
	25-31004-223	M1		1	
	25-31004-225	M1		1	
	25-31004-227	M1		1	
	25-31004-229	M1		1	
	25-31004-231	M1		1	
	25-31004-233	M1		1	
	25-31004-235	M1		1	
	25-31004-237	M1		1	
	25-31004-239	M1		2	
	25-31004-241	M1		1	
	25-31004-243	M1		1	
	25-31004-245	M1		1	
	25-31004-247	M1		1	
	25-31004-249	M1		1	
	25-31004-251	M1		1	
	25-31004-253	M1		1	
	25-31004-255	M1		1	
	25-31004-257	M1		1	
	25-31004-259	M1		1	
	25-31004-261	M1		1	
	25-31004-263	M1		1	
	25-31004-265	M1		1	
	25-31004-267	M1		1	
	25-31004-269	M1		1	
	25-31004-271	M1		1	
	25-31004-273	M1		1	
	25-31004-275	M1		1	
	25-31004-277	M1		1	
	25-31004-279	M1		1	
	25-31004-281	M1		1	
	25-31004-283	M1		1	
	25-31004-285	M1		1	
	25-31004-287	M1		1	
	25-31004-289	M1		1	
	25-31004-291	M1		1	
	25-31004-293	M1		1	
	25-31004-295	M1		1	
	25-31004-297	M1		1	
	25-31004-299	M1		1	
	25-31004-301	X	45 - 62 47 -	1	
	25-31004-303		45 - 62 47 -	1	
	25-31004-401	M1		1	
	25-31004-403	M1		1	
	25-31004-405	M1		1	
	25-31004-407	M1		1	
	25-31004-409	M1		1	
	25-31004-411	M1		1	
	25-31004-413	M1		1	
	25-31004-415	M1		1	
	25-31004-417	M1		1	
	25-31004-419	M1		1	
	25-31004-421	M1		1	
	25-31004-423	M1		1	
	25-31004-425	M1		1	
	25-31004-427	M1		1	
	25-31004-429	M1		1	
	25-31004-431	M1		1	
	25-31004-433	M1		1	
	25-31004-435	M1		1	
	25-31004-437	M1		1	
	25-31004-439	M1		1	
	25-31004-441	M1		1	
	25-31004-443	M1		1	
	25-31004-445	M1		1	
	25-31004-449	M1		1	
	25-31004-451	M1		1	
	25-31004-453	M1		2	
	25-31004-455	M1		1	
	25-31004-457	M1		1	
	25-31004-459	M1		1	
	25-31004-461	M1		1	
	25-31004-463	M1		1	
	25-31004-465	M1		1	
	25-31004-467	M1		1	
	25-31004-469	M1		1	
	25-31004-471	M1		8	
	25-31004-473	M1		1	
	25-31004-477	M1		1	
	25-31004-479	M1		1	
	25-31004-481	M1		1	
	25-31004-483	M1		1	
	25-31004-485	M1		1	
	25-31004-487	M1		1	
	25-31004-489	M1		1	
	25-31004-491	M1		1	
	25-31004-493	M1		1	
	25-31004-495	M1		1	
	25-31004-497			1	
	25-31004-499			1	
	25-31005- 1		46 -	1	E-245 E-246
	25-31005- 2		47 -	1	
	25-31005- 3	M1		1	
	25-31005- 5	M1		1	
	25-31005- 9			1	

STOCK	PART NUMBER	SOURCE CODE	FIGURE & INDEX NO.	QTY. PER A/C	MICROFILM INDEX
	25-31005- 13			1	
	25-31005- 15	M1		1	
	25-31005- 17	M1		1	
	25-31005- 19	M1		1	
	25-31005- 23	M1		2	
	25-31005- 25	M1		1	
	25-31005- 26			1	
	25-31005- 29	M1		2	
	25-31005- 31	M1		1	
	25-31005- 32	M1		1	
	25-31005- 33	M1		1	
	25-31005- 34	M1		1	
	25-31005- 35	M1		1	
	25-31005- 41			1	
	25-31005- 47	M1		2	
	25-31005- 49	M1		2	
	25-31005- 51	M1		1	
	25-31005- 52	M1		1	
	25-31005- 61	M1		1	
	25-31005- 63	M1		2	
	25-31005- 65	M1		2	
	25-31005- 69			1	
	25-31005- 70	M1		1	
	25-31005- 71	M1		1	
	25-31005- 72	M1		1	
	25-31005- 89	M1		1	
	25-31005- 91	M1		1	
	25-31005- 93	M1		1	
	25-31005- 95	M1		1	
	25-31005- 96	M1		1	
	25-31005- 97			1	
	25-31005-101			1	
	25-31005-103	M1		1	
	25-31005-105	M1		1	
	25-31005-107	M1	46 - 81	1	
	25-31005-109	M	47 - 89	1	
	25-31005-111	M		1	
	25-31005-113	M1		1	
	25-31005-115	M1		1	
	25-31005-117	M1		1	
	25-31005-123	M1		1	
	25-31005-129	M1		2	
	25-31005-131	M1		1	
	25-31005-133	M1	47 - 90	1	
	25-31005-135	M1		1	
	25-31005-137			1	
	25-31005-139	M1		3	
	25-31005-141	M1		2	
	25-31005-143	M1		1	
	25-31005-145	M1		1	
	25-31005-147	M1		1	
	25-31005-149			1	
	25-31005-151	M1		1	
	25-31005-153	M1		1	
	25-31005-155	M1		2	
	25-31005-157	M1		1	
	25-31005-161	M1		1	
	25-31005-163	M1		1	
	25-31005-165	M1		1	
	25-31005-167	M1		1	
	25-31005-169	M1		1	
	25-31005-170	M1		1	
	25-31005-171	M1		1	
	25-31005-173	M1		1	
	25-31005-175	M1		1	
	25-31005-176	M1		1	
	25-31005-177	M1		1	
	25-31005-179	M1		1	
	25-31005-181	M1		1	
	25-31005-183	M1		1	
	25-31005-185			1	
	25-31005-191	M1		1	
	25-31005-193	M1		1	
	25-31005-195	M1		3	
	25-31005-197	M1		1	
	25-31005-203			1	
	25-31005-205			1	
	25-31005-207			2	
	25-31005-209		46 - 83	1	
	25-31005-211			1	
	25-31005-213			1	
	25-31005-214			1	
	25-31005-215			1	
	25-31005-217			1	
	25-31005-219			1	
	25-31005-221			1	
	25-31005-223			1	
	25-31005-225			1	
	25-31005-227			1	
	25-31005-229			1	
	25-31005-301		46 -	1	
	25-31005-302		47 -	1	
	25-31005-303		46 -	1	
	25-31005-304		47 -	1	
	25-31006- 1	M1		1	E-247
	25-31006- 2	M1		1	

STOCK	PART NUMBER	SOURCE CODE	FIGURE & INDEX NO.	QTY. PER A/C	MICROFILM INDEX
	25-31006- 3	M1		1	
	25-31006- 4	M1		1	
	25-31006- 5	M1		1	
	25-31006- 6	M1		1	
	25-31006- 7	M1		1	
	25-31006- 8	M1		1	
	25-31006- 9	M1		1	
	25-31006- 11	M1		1	
	25-31006- 12	M1		1	
	25-31006- 13	M1		1	
	25-31006- 14	M1		1	
	25-31006- 15	M1		1	
	25-31006- 17	M1		1	
	25-31006- 18	M1		1	
	25-31006- 19	M1		2	
	25-31006- 21	M1		4	
	25-31006- 24	M1		1	
	25-31006- 25	M1		1	
	25-31006- 27	M1		1	
	25-31006- 28			1	
	25-31006- 29			1	
	25-31006- 31			1	
	25-31006- 32	M1		1	
	25-31006- 33			2	
	25-31006-301			1	
	25-31006-302	M1		1	
	25-31007- 1	M1		1	E-248
	25-31007- 2	M1		1	
	25-31007- 3	M1		1	
	25-31007- 4	M1		1	
	25-31007- 7	M1		1	
	25-31007- 9	M1		1	
	25-31007- 11	M1		1	
	25-31007- 13	M1		1	
	25-31007- 15	M1		1	
	25-31007- 17			1	
	25-31007- 19	M1		1	
	25-31007- 21	M1		2	
	25-31007- 23	M1		1	
	25-31007- 27	M1		1	
	25-31007- 31	M1		1	
	25-31007- 33	M1		1	
	25-31007- 35	M1		1	
	25-31007- 37	M1		1	
	25-31007- 39	M1		1	
	25-31007- 41			1	
	25-31007- 43			2	
	25-31007- 45			1	
	25-31007-301			1	
	25-31007-303			1	
	25-31007-304			1	
	25-31008- 1		46 -	1	XA-172 XA-173
	25-31008- 2	M1	47 -	1	
	25-31008- 7			1	
	25-31008- 8	M1		1	
	25-31008- 9	M1		2	
	25-31008- 11	M1		1	
	25-31008- 13	M1		1	
	25-31008- 14	M1		1	
	25-31008- 17			2	
	25-31008- 23			1	
	25-31008- 24			1	
	25-31008- 33			1	
	25-31008- 35			1	
	25-31008- 39			1	
	25-31008- 41			1	
	25-31008- 47	M1		1	
	25-31008- 48	M1		1	
	25-31008- 49			1	
	25-31008- 51	M1		1	
	25-31008- 53	M1		2	
	25-31008- 55			2	
	25-31008- 57	M1		1	
	25-31008- 59	M1		1	
	25-31008- 60			1	
	25-31008- 61	M1		1	
	25-31008- 63	M1		1	
	25-31008- 65	M1		1	
	25-31008- 67	M1		1	
	25-31008- 69	M1		1	
	25-31008- 71	M1		1	
	25-31008- 73	M		1	
	25-31008- 75	M1		1	
	25-31008- 77	M1		1	
	25-31008- 79	M1		1	
	25-31008- 81	M1		1	
	25-31008- 82	M1		1	
	25-31008- 85	M1		2	
	25-31008- 91		46 -134 47 -126	2	
	25-31008- 93	M1		1	
	25-31008- 99	M1		1	
	25-31008-101	M1		1	
	25-31008-103	M1		1	
	25-31008-105			1	
	25-31008-107			1	

STOCK	PART NUMBER	SOURCE CODE	FIGURE & INDEX NO.	QTY. PER A/C	MICROFILM INDEX
	25-31008-108	M1		1	
	25-31008-109	M1		2	
	25-31008-113	M1		1	
	25-31008-115	M1		1	
	25-31008-117	M1		2	
	25-31008-131	M1		1	
	25-31008-143	M1		1	
	25-31008-145	M1		1	
	25-31008-147	M1		1	
	25-31008-149	M1		1	
	25-31008-151	M1		1	
	25-31008-153	M1		1	
	25-31008-155	M1		1	
	25-31008-157	M1		1	
	25-31008-158	M1		1	
	25-31008-159	M1		1	
	25-31008-161	M1		1	
	25-31008-163	M1		1	
	25-31008-164	M1		1	
	25-31008-165	M1		1	
	25-31008-166	M1		1	
	25-31008-167	M1		1	
	25-31008-169	M1		1	
	25-31008-171	M1		1	
	25-31008-173	M1		1	
	25-31008-175	M1		2	
	25-31008-177	M1		1	
	25-31008-178	M1		1	
	25-31008-179	M1		1	
	25-31008-180	M1		1	
	25-31008-181	M1		3	
	25-31008-183	M1		3	
	25-31008-185	M1		1	
	25-31008-187			1	
	25-31008-189			1	
	25-31008-191			1	
	25-31008-193			1	
	25-31008-195			1	
	25-31008-197			1	
	25-31008-199			1	
	25-31008-201			1	
	25-31008-203			1	
	25-31008-204			1	
	25-31008-205			2	
	25-31008-207			1	
	25-31008-209			1	
	25-31008-301	M1	46 -	1	
	25-31008-302	M1	47 -	1	
	25-31009- 1	M1		1	E-251
	25-31009- 2	M1		1	
	25-31009- 3	M1	46 -	1	
	25-31009- 4	M1		1	
	25-31009- 5	M1		1	
	25-31009- 6	M1		1	
	25-31009- 9	M1		1	
	25-31009- 10	M1		1	
	25-31009- 13	M1		1	
	25-31009- 14	M1		1	
	25-31009- 15	M1		1	
	25-31009- 16	M1		1	
	25-31009- 19	M1		1	
	25-31009- 20	M1		1	
	25-31009- 21	M1		2	
	25-31009- 22	M1		2	
	25-31009- 23	M1		1	
	25-31009- 25	M1		1	
	25-31009- 26	M1		1	
	25-31009- 27	M1		2	
	25-31009- 29	M1		1	
	25-31009- 30	M1		1	
	25-31009- 31			1	
	25-31009- 32			1	
	25-31009- 33	M1		1	
	25-31009- 34	M1		1	
	25-31009- 35	M1		1	
	25-31009- 37	M1		2	
	25-31009- 38	M1		2	
	25-31009- 39	M1		1	
	25-31009- 40	M1		1	
	25-31009- 41	M1		1	
	25-31009- 43			1	
	25-31009-301	M1	46 -	1	
	25-31009-302	M1		1	
	25-31010- 1	M1		1	E-252
	25-31010- 2	M1		1	
	25-31010- 3	M1		1	
	25-31010- 4	M1		1	
	25-31010- 7	M1		1	
	25-31010- 8	M1		1	
	25-31010- 9	M1		1	
	25-31010- 11	M1		1	
	25-31010- 12	M1		1	
	25-31010- 13	M1		2	
	25-31010- 15	M1		1	
	25-31010- 16	M1		1	
	25-31010- 17	M1		2	

STOCK	PART NUMBER	SOURCE CODE	FIGURE & INDEX NO.	QTY. PER A/C	MICROFILM INDEX
	25-31010- 21			1	
	25-31010- 22			1	
	25-31010- 23	M1		2	
	25-31010- 25	M1		1	
	25-31010- 26	M1		1	
	25-31010- 27	M1		1	
	25-31010- 28	M1		1	
	25-31010- 30	M1		1	
	25-31010- 31	M1		1	
	25-31010- 32			1	
	25-31010- 33	M1		1	
	25-31010- 34	M1		2	
	25-31010- 35	M1		2	
	25-31010- 39	M1		1	
	25-31010- 40	M1		1	
	25-31010- 41	M1		2	
	25-31010- 42	M1		2	
	25-31010- 43	M1		2	
	25-31010- 44	M1		2	
	25-31010- 45	M1		1	
	25-31010- 47	M1		1	
	25-31010- 48	M1		1	
	25-31010- 49	M1		1	
	25-31010- 50	M1		1	
	25-31010- 51	M1		1	
	25-31010- 52	M1		1	
	25-31010- 53	M1		4	
	25-31010-301	M1		2	
	25-31010-302	M1		1	
	25-31010-305			1	
	25-31011- 1	M1		1	E-253
	25-31011- 2	M1		1	
	25-31011- 3	M1	46 -	1	
	25-31011- 4	M1		1	
	25-31011- 5	M1	46 -	1	
	25-31011- 6	M1	47 -	1	
	25-31011- 7	M1		1	
	25-31011- 8	M1		1	
	25-31011- 9	M1		1	
	25-31011- 10	M1		1	
	25-31011- 15	M1		1	
	25-31011- 18	M1		1	
	25-31011- 19	M1		1	
	25-31011- 20	M1		1	
	25-31011- 23	M1		1	
	25-31011- 24	M1		1	
	25-31011- 25	M1		1	
	25-31011- 26	M1		1	
	25-31011- 27	M1		1	
	25-31011- 28	M1		1	
	25-31011- 29	M1		1	
	25-31011- 30	M1		1	
	25-31011- 31	M1		1	
	25-31011- 32	M1		1	
	25-31011- 33	M		1	
	25-31011- 35	M1		1	
	25-31011- 37	M1		1	
	25-31011- 39	M1		1	
	25-31011- 40	M1		1	
	25-31011- 41	M1		1	
	25-31011- 43	M1		1	
	25-31011- 45	M1		2	
	25-31011- 47	M1		2	
	25-31011- 49	M1		1	
	25-31011- 50	M1		1	
	25-31011- 51	M1		2	
	25-31011- 53	M1		2	
	25-31011- 55	M1		1	
	25-31011- 56	M1		1	
	25-31011- 57			1	
	25-31011- 58			1	
	25-31011-301	M1	46 -	1	
	25-31011-302	M1		1	
	25-31011-303			1	
	25-31011-304			1	
	25-31012- 1	M1	46 -	1	F-1
	25-31012- 2	M1	47 -	1	
	25-31012- 3	M1		1	
	25-31012- 4	M1		1	
	25-31012- 5	M1		1	
	25-31012- 6	M1		1	
	25-31012- 9	M1		1	
	25-31012- 10	M1		1	
	25-31012- 13	M1		2	
	25-31012- 14	M1		1	
	25-31012- 15	M1		1	
	25-31012- 17	M1		1	
	25-31012- 21	M1		1	
	25-31012- 22	M1		1	
	25-31012- 25	M1		1	
	25-31012- 26	M1		1	
	25-31012- 27	M1		1	
	25-31012- 28	M1		1	
	25-31012- 35	M1		1	
	25-31012- 36	M1		1	
	25-31012- 38	M1		1	

STOCK	PART NUMBER	SOURCE CODE	FIGURE & INDEX NO.	QTY. PER A/C	MICROFILM INDEX
	25-31012- 39	M1		1	
	25-31012- 40	M1		1	
	25-31012- 43	M1		1	
	25-31012- 45	M1		1	
	25-31012- 46	M1		1	
	25-31012- 49	M1		1	
	25-31012- 50	M1		1	
	25-31012- 51	M1		1	
	25-31012- 53	M1		1	
	25-31012- 54	M1		1	
	25-31012- 57	M1		1	
	25-31012- 58	M1		1	
	25-31012- 59	M1		1	
	25-31012- 61	M1		1	
	25-31012- 63	M1		1	
	25-31012- 65	M1		1	
	25-31012- 67	M1		1	
	25-31012- 68	M1		1	
	25-31012- 69	M1		1	
	25-31012- 71	M1		1	
	25-31012- 73	M1		1	
	25-31012- 74			1	
	25-31012- 77	M1		1	
	25-31012- 79			1	
	25-31012- 81			1	
	25-31013- 1	M1	46 -	1	D-341 XA-174
	25-31013- 2	M1	47 -	1	
	25-31013- 3	M1		1	
	25-31013- 5	M1		1	
	25-31013- 7	M1		1	
	25-31013- 9	M1		1	
	25-31013- 11	M1		1	
	25-31013- 12	M1		1	
	25-31013- 17	M1		1	
	25-31013- 19	M1		1	
	25-31013- 21	M1		1	
	25-31013- 22	M1		1	
	25-31013- 23	M1		1	
	25-31013- 24	M1		1	
	25-31013- 25	M1		2	
	25-31013- 26	M1		2	
	25-31013- 27	M1		1	
	25-31013- 28	M1		1	
	25-31013- 29	M1		2	
	25-31013- 35	M1		2	
	25-31013- 37	M1		1	
	25-31013- 38	M1		1	
	25-31013- 39	M1		1	
	25-31013- 40	M1		1	
	25-31013- 43	M1		1	
	25-31013- 45	M1		1	
	25-31013- 47	M1		1	
	25-31013- 52	M1		1	
	25-31013- 53	M1		2	
	25-31013- 54	M1		2	
	25-31013- 55	M1		1	
	25-31013- 57	M1		1	
	25-31013- 59	M1		1	
	25-31013- 60	M1		1	
	25-31013- 61	M1		1	
	25-31013- 63	M1		2	
	25-31013- 65	M1		2	
	25-31013- 67	M1		1	
	25-31013- 69	M1		1	
	25-31013- 70	M1		1	
	25-31013- 73	M1		1	
	25-31013- 79	M1		1	
	25-31013- 81	M1		1	
	25-31013- 83	M1		1	
	25-31013- 87	M1		1	
	25-31013- 89	M1		5	
	25-31013- 91	M1		1	
	25-31013- 93	M1		1	
	25-31013- 95	M1		1	
	25-31013- 99	M1		1	
	25-31013-101	M1		1	
	25-31013-103	M1		1	
	25-31013-105	M1		1	
	25-31013-111	M1		2	
	25-31013-113	M1		1	
	25-31013-115			1	
	25-31013-117	M1		1	
	25-31013-119	M1		1	
	25-31013-121	M1		1	
	25-31013-122	M1		1	
	25-31013-123	M1		1	
	25-31013-124	M1		1	
	25-31013-125	M1		1	
	25-31013-127	M1		1	
	25-31013-129	M1		1	
	25-31013-131	M1		1	
	25-31013-135	M1		2	
	25-31013-137	M1		2	
	25-31013-139	M1		3	
	25-31013-140	M1		3	
	25-31013-141	M1		3	

STOCK	PART NUMBER	SOURCE CODE	FIGURE & INDEX NO.	QTY. PER A/C	MICROFILM INDEX
	25-31013-142	M1		3	
	25-31013-143	M1		2	
	25-31013-144	M1		2	
	25-31013-145	M1		2	
	25-31013-146	M1		2	
	25-31013-147	M1		1	
	25-31013-149	M1		2	
	25-31013-151	M1		1	
	25-31013-152	M1		1	
	25-31013-153	M1		1	
	25-31013-154	M1		1	
	25-31013-157	M1		1	
	25-31013-159			1	
	25-31013-161			1	
	25-31013-162			1	
	25-31013-163			1	
	25-31013-301	M1	46 -	1	
	25-31013-302	M1	47 -	1	
	25-31014- 1	M1	46 -	1	F-3 F-4
	25-31014- 2	M1	47 -	1	
	25-31014- 3	M1		1	
	25-31014- 5	M1		1	
	25-31014- 7	M1		1	
	25-31014- 9	M1		1	
	25-31014- 11	M1		1	
	25-31014- 12	M1		1	
	25-31014- 13	M1		1	
	25-31014- 14	M1		1	
	25-31014- 15	M1		2	
	25-31014- 19	M1		1	
	25-31014- 20	M1		1	
	25-31014- 21	M1		1	
	25-31014- 22	M1		1	
	25-31014- 25	M1		1	
	25-31014- 26	M1		1	
	25-31014- 27	M1		1	
	25-31014- 28	M1		1	
	25-31014- 29	M1		1	
	25-31014- 31	M1		1	
	25-31014- 33	M1		1	
	25-31014- 34	M1		1	
	25-31014- 35	M1		1	
	25-31014- 37	M1		1	
	25-31014- 39	M1		1	
	25-31014- 40	M1		1	
	25-31014- 41	M1		1	
	25-31014- 42	M1		1	
	25-31014- 43	M1		1	
	25-31014- 44	M1		1	
	25-31014- 45	M1		1	
	25-31014- 46	M1		1	
	25-31014- 47	M1		1	
	25-31014- 48	M1		1	
	25-31014- 49	M1		1	
	25-31014- 50	M1		1	
	25-31014- 51	M1		1	
	25-31014- 52	M1		1	
	25-31014- 53	M1		1	
	25-31014- 57	M1		1	
	25-31014- 58	M1		1	
	25-31014- 59	M1		2	
	25-31014- 61	M1		1	
	25-31014- 63	M1		1	
	25-31014- 67	M1		1	
	25-31014- 73	M1		1	
	25-31014- 74	M1		1	
	25-31014- 75	M1		1	
	25-31014- 77	M		1	
	25-31014- 79	M1		1	
	25-31014- 80	M1		1	
	25-31014- 81	M1		1	
	25-31014- 85	M1		1	
	25-31014- 86	M1		1	
	25-31014- 87	M1		2	
	25-31014- 88	M1		2	
	25-31014- 89	M1		1	
	25-31014- 90	M1		1	
	25-31014- 91	M1		1	
	25-31014- 93	M1		1	
	25-31014- 95	M1		1	
	25-31014- 97	M1		2	
	25-31014- 99	M1		1	
	25-31014-100	M1		1	
	25-31014-101	M1		1	
	25-31014-102	M1		1	
	25-31014-103	M1		1	
	25-31014-104	M1		1	
	25-31014-105	M1	46 - 51 47 - 45	2	
	25-31014-107	M1		2	
	25-31014-109	M1		1	
	25-31014-111	M1		1	
	25-31014-113			1	
	25-31014-115			1	
	25-31014-117			1	
	25-31014-118			1	

STOCK	PART NUMBER	SOURCE CODE	FIGURE & INDEX NO.	QTY. PER A/C	MICROFILM INDEX
	25-31014-119			1	
	25-31014-120			1	
	25-31014-121			1	
	25-31014-122			1	
	25-31014-301	M1	46 -	1	
	25-31014-302		47 -	1	
	25-31015- 1	M1		1	F-5
	25-31015- 3	M1		1	
	25-31015- 5	M1		1	
	25-31015- 9	M1		1	
	25-31015- 11	M1		1	
	25-31015- 12	M1		1	
	25-31015- 13	M1		1	
	25-31015- 15	M1		1	
	25-31015- 16	M1		1	
	25-31015- 17	M		1	
	25-31015- 21	M1		1	
	25-31015- 22	M1		1	
	25-31015- 23	M1		1	
	25-31015- 24	M1		1	
	25-31015- 25	M1		1	
	25-31015- 26	M1		1	
	25-31015- 27	M1		1	
	25-31015- 28	M1		1	
	25-31015- 29	M1		1	
	25-31015- 30	M1		1	
	25-31015- 31	M1		1	
	25-31015- 32	M1		1	
	25-31015- 33	M1		1	
	25-31015- 34	M1		1	
	25-31015- 35	M1		1	
	25-31015- 37	M1		1	
	25-31015- 39	M1		1	
	25-31015- 41	M1		1	
	25-31015- 42	M1		1	
	25-31015- 43	M1		1	
	25-31015- 45	M1		1	
	25-31015- 49	M1		1	
	25-31015- 51	M1		1	
	25-31015- 53	M1		1	
	25-31015- 54	M1		1	
	25-31015- 55	M1		2	
	25-31015- 59	M1		2	
	25-31015- 61	M1		2	
	25-31015- 63	M1		1	
	25-31015- 65	M1		1	
	25-31015- 66	M1		1	
	25-31015- 69	M1		1	
	25-31015- 71	M1		1	
	25-31015- 73	M1		1	
	25-31015- 75	M1		1	
	25-31015- 77	M1		1	
	25-31015- 79	M1		1	
	25-31015- 81	M1		1	
	25-31015- 83	M1		1	
	25-31015- 85			1	
	25-31015- 87			1	
	25-31015-301	M1		1	
	25-31015-303	M1		1	
	25-31015-305	M1		1	
	25-31015-307			1	
	25-31016- 1	M1		1	D-342
	25-31016- 2	M1		1	
	25-31016- 3	M1		1	
	25-31016- 4	M1		1	
	25-31016- 5	M1		1	
	25-31016- 6	M1		1	
	25-31016- 7	M1		1	
	25-31016- 8	M1		1	
	25-31016- 9	M1		1	
	25-31016- 10	M1		1	
	25-31016- 11	M1		1	
	25-31016- 12	M1		1	
	25-31016- 13	M1		1	
	25-31016- 14	M1		1	
	25-31016- 15	M1		1	
	25-31016- 16	M1		1	
	25-31016- 17	M1		2	
	25-31016- 19	M1		1	
	25-31016- 20	M1		1	
	25-31016- 21	M1		1	
	25-31016- 22	M1		1	
	25-31016- 23	M1		1	
	25-31016- 24	M1		1	
	25-31016- 25	M1		1	
	25-31016- 26	M1		1	
	25-31016- 29	M1		1	
	25-31016- 30	M1		1	
	25-31016- 31	M1		1	
	25-31016- 33	M1		1	
	25-31016- 35	M1		2	
	25-31016- 37	M1		1	
	25-31016- 39	M1		1	
	25-31016- 41	M1		1	
	25-31016- 43	M1		1	
	25-31016- 45	M1		1	

STOCK	PART NUMBER	SOURCE CODE	FIGURE & INDEX NO.	QTY. PER A/C	MICROFILM INDEX
	25-31016- 47	M1		1	
	25-31016- 49	M1		1	
	25-31016- 50	M1		1	
	25-31016- 51	M1		1	
	25-31016- 52	M1		1	
	25-31016- 53	M		1	
	25-31016- 57	M1		1	
	25-31016- 58	M1		1	
	25-31016- 63	M1		1	
	25-31016- 64	M1		1	
	25-31016- 65	M1		1	
	25-31016- 66	M1		1	
	25-31016- 67	M1		2	
	25-31016- 69	M1		1	
	25-31016- 70	M1		1	
	25-31016- 71	M1		1	
	25-31016- 72	M1		1	
	25-31016- 73	M1		2	
	25-31016- 75	M1		1	
	25-31016- 76	M1		1	
	25-31016- 77	M1		1	
	25-31016- 79	M1		1	
	25-31016- 81	M1		1	
	25-31016- 83	M1		1	
	25-31016- 85	M1		1	
	25-31016- 87	M1		1	
	25-31016- 88	M1		1	
	25-31016- 89	M1		1	
	25-31016- 90	M1		1	
	25-31016- 91	M1		1	
	25-31016- 93	M1		1	
	25-31016- 97			2	
	25-31016- 99			1	
	25-31016-101			1	
	25-31016-301	M1		1	
	25-31016-302	M1		1	
	25-31016-303	M1		1	
	25-31017- 1	M1		1	F-6
	25-31017- 2	M1		1	
	25-31017- 3	M1		1	
	25-31017- 4	M1		1	
	25-31017- 5	M1		1	
	25-31017- 6	M1		1	
	25-31017- 7	M1		1	
	25-31017- 8	M1		1	
	25-31017- 9	M1		1	
	25-31017- 10	M1		1	
	25-31017- 11	M1		1	
	25-31017- 12	M1		1	
	25-31017- 13	M1		1	
	25-31017- 14	M1		1	
	25-31017- 15	M1		1	
	25-31017- 17	M1		1	
	25-31017- 18	M1		1	
	25-31017- 19	M1		1	
	25-31017- 21	M		1	
	25-31017- 23	M1		1	
	25-31017- 25	M1		1	
	25-31017- 27	M1		1	
	25-31017- 29	M1		1	
	25-31017- 31	M1		2	
	25-31017- 37	M1		1	
	25-31017- 41	M1		1	
	25-31017- 43	M1		3	
	25-31017- 45			1	
	25-31017- 49			1	
	25-31017-301	M1		1	
	25-31018- 1	M1		1	F-7 F-8
	25-31018- 2	M1		1	
	25-31018- 3	M1		1	
	25-31018- 4	M1		1	
	25-31018- 5	M1		1	
	25-31018- 9	M1		1	
	25-31018- 10	M1		1	
	25-31018- 11	M1		1	
	25-31018- 13	M1		1	
	25-31018- 14	M1		1	
	25-31018- 15	M1		1	
	25-31018- 16	M1		1	
	25-31018- 17	M1		1	
	25-31018- 19	M1		1	
	25-31018- 21	M1		1	
	25-31018- 23	M1		1	
	25-31018- 25	M1		2	
	25-31018- 27	M1		1	
	25-31018- 29	M1		1	
	25-31018- 33	M1		1	
	25-31018- 37	M1		1	
	25-31018- 39	M1		1	
	25-31018- 40	M1		1	
	25-31018- 41	M1		1	
	25-31018- 43	M1		1	
	25-31018- 45	M1		1	
	25-31018- 47	M1		1	
	25-31018- 51	M1		1	
	25-31018- 52	M1		1	

STOCK	PART NUMBER	SOURCE CODE	FIGURE & INDEX NO.	QTY. PER A/C	MICROFILM INDEX
	25-31018- 53	M1		1	
	25-31018- 54	M1		1	
	25-31018- 55	M1		1	
	25-31018- 57	M1		1	
	25-31018- 59	M1		1	
	25-31018- 61	M1		1	
	25-31018- 63	M1		1	
	25-31018- 65	M1		1	
	25-31018- 67	M1		2	
	25-31018- 71	M1		2	
	25-31018- 73	M1		1	
	25-31018- 75	M1		1	
	25-31018- 77	M1		1	
	25-31018- 78	M1		1	
	25-31018- 79	M1		2	
	25-31018- 81	M1		1	
	25-31018- 83	M1		1	
	25-31018- 89	M1		1	
	25-31018- 91	M1		1	
	25-31019- 1	M1		1	F-9
	25-31019- 2	M1		1	
	25-31019- 3	M1		1	
	25-31019- 5	M1		1	
	25-31019- 7	M1		1	
	25-31019- 9	M1		1	
	25-31019- 11	M1		1	
	25-31019- 13	M1		1	
	25-31019- 14	M1		1	
	25-31019- 15	M1		1	
	25-31019- 17	M1		1	
	25-31019- 19	M1		1	
	25-31019- 20	M1		1	
	25-31019- 21	M1		1	
	25-31019- 22	M1		1	
	25-31019- 23	M1		1	
	25-31019- 24	M1		1	
	25-31019- 25	M1		1	
	25-31019- 26			1	
	25-31019- 27	M1		1	
	25-31019- 29	M1		1	
	25-31019- 31	M1		1	
	25-31019- 33	M1		1	
	25-31019- 39	M1		1	
	25-31019- 43	M1		1	
	25-31019- 45	M1		1	
	25-31019- 49	M1		1	
	25-31019- 50	M1		1	
	25-31019- 51	M1		1	
	25-31019- 53			1	
	25-31019- 55	M1		2	
	25-31019- 57	M1		1	
	25-31019- 59	M1		1	
	25-31019- 61	M1		1	
	25-31019- 63	M1		1	
	25-31019- 65	M1		1	
	25-31019- 67	M1		1	
	25-31019- 69	M1		1	
	25-31019- 71	M1		1	
	25-31019- 73	M1		1	
	25-31019- 75	M1		1	
	25-31019-301	M1		1	
	25-31019-302	M1		1	
	25-31019-303	M1		1	
	25-31020- 1	M1		1	F-10
	25-31020- 2	M1		1	
	25-31020- 3	M1		1	
	25-31020- 5	M1		1	
	25-31020- 6	M1		1	
	25-31020- 7	M1		1	
	25-31020- 8	M1		1	
	25-31020- 9	M1		1	
	25-31020- 10	M1		1	
	25-31020- 11	M1		1	
	25-31020- 12	M1		1	
	25-31020- 13	M1		1	
	25-31020- 14	M1		1	
	25-31020- 15	M1		1	
	25-31020- 16	M1		1	
	25-31020- 17	M1		1	
	25-31020- 18	M1		1	
	25-31020- 19	M1		1	
	25-31020- 20	M1		1	
	25-31020- 21	M1		1	
	25-31020- 22	M1		1	
	25-31020- 23	M1		1	
	25-31020- 25	M1		1	
	25-31020- 27	M1		1	
	25-31020- 29	M1		1	
	25-31020- 30	M1		1	
	25-31020- 33	M1		1	
	25-31020- 35	M1		1	
	25-31020- 37	M1		1	
	25-31020- 39	M1		1	
	25-31020- 41	M1		1	
	25-31020- 43	M1		1	
	25-31020- 45	M1		1	

STOCK	PART NUMBER	SOURCE CODE	FIGURE & INDEX NO.	QTY. PER A/C	MICROFILM INDEX
	25-31020- 47	M1		1	
	25-31020-301			1	
	25-31020-302			1	
	25-31020-303			1	
	25-31021- 1	M1		1	F-11
	25-31021- 2	M1		1	
	25-31021- 5	M1		1	
	25-31021- 6	M1		1	
	25-31021- 7	M1		1	
	25-31021- 8	M1		1	
	25-31021- 9	M1		1	
	25-31021- 10	M1		1	
	25-31021- 11	M1		1	
	25-31021- 12	M1		1	
	25-31021- 13	M1		2	
	25-31021- 15	M1		2	
	25-31021- 17	M1		1	
	25-31021- 18	M1		1	
	25-31021- 19	M1		1	
	25-31021- 20	M1		1	
	25-31021- 23	M1		1	
	25-31021- 24	M1		1	
	25-31021- 25	M1		1	
	25-31021- 26	M1		1	
	25-31021- 27	M1		1	
	25-31021- 28	M1		1	
	25-31021- 29	M1		1	
	25-31021- 31	M1		1	
	25-31021- 32	M1		1	
	25-31021- 33	M1		1	
	25-31021- 34	M1		1	
	25-31021- 35	M1		1	
	25-31021- 36	M1		1	
	25-31021- 37	M1		1	
	25-31021- 39	M1		1	
	25-31021- 41	M1		1	
	25-31021- 43	M1		1	
	25-31021- 45	M1		1	
	25-31021- 47	M1		1	
	25-31021- 49			2	
	25-31021- 51			2	
	25-31021- 53			2	
	25-31021- 54			2	
	25-31021- 55			2	
	25-31021- 56			2	
	25-31021-301	M1		1	
	25-31021-303			1	
	25-31022- 1	M1		1	D-343
	25-31022- 2	M1		1	
	25-31022- 4	M1		1	
	25-31022- 5	M1		1	
	25-31022- 6	M1		1	
	25-31022- 7	M1		1	
	25-31022- 8	M1		1	
	25-31022- 11	M1		1	
	25-31022- 12	M1		1	
	25-31022- 13	M1		1	
	25-31022- 14	M1		1	
	25-31022- 15	M1		1	
	25-31022- 16	M1		1	
	25-31022- 17	M1		1	
	25-31022- 18	M1		1	
	25-31022- 19	M1		1	
	25-31022- 20	M1		1	
	25-31022- 21	M1		1	
	25-31022- 22	M1		1	
	25-31022- 24	M1		1	
	25-31022- 25	M1		1	
	25-31022- 26	M1		1	
	25-31022- 27	M1		1	
	25-31022- 28	M1		1	
	25-31022- 29	M1		2	
	25-31022- 31	M1		2	
	25-31022- 33	M1		2	
	25-31022- 35	M1		2	
	25-31022- 37	M1		2	
	25-31022- 39	M1		1	
	25-31022- 41	M1		1	
	25-31022- 43	M1		1	
	25-31022- 45	M1		1	
	25-31022- 46	M1		1	
	25-31022- 49	M1		1	
	25-31022- 50	M1		1	
	25-31022- 51	M1		1	
	25-31022- 53	M1		1	
	25-31022- 55	M1		1	
	25-31022- 57	M1		1	
	25-31022- 59	M1		1	
	25-31022- 63	M1		1	
	25-31022- 65	M1		1	
	25-31022- 67	M1		1	
	25-31022- 69	M1		1	
	25-31022- 71	M1		1	
	25-31022- 73	M1		1	
	25-31022- 75	M1		1	
	25-31022- 77	M1		1	

STOCK	PART NUMBER	SOURCE CODE	FIGURE & INDEX NO.	QTY. PER A/C	MICROFILM INDEX
	25-31022- 79	M1		1	
	25-31022- 81	M1		1	
	25-31022- 83	M1		1	
	25-31022- 85			2	
	25-31022- 87			2	
	25-31022-301	M1		1	
	25-31022-303			1	
	25-31023- 1		46 -	1	F-12
	25-31023- 2	M1	47 -	1	
	25-31023- 3	M1		1	
	25-31023- 4	M1		1	
	25-31023- 5	M1		1	
	25-31023- 6	M1		1	
	25-31023- 7	M1		1	
	25-31023- 8	M1		1	
	25-31023- 9	M1		2	
	25-31023- 11	M1		1	
	25-31023- 13	M1		1	
	25-31023- 15	M1		1	
	25-31023- 17	M1		1	
	25-31023- 19	M1		1	
	25-31023- 21	M1		1	
	25-31023- 23	M1		1	
	25-31023- 25	M1		1	
	25-31023- 27	M1		2	
	25-31023- 29	M1		2	
	25-31023- 31	M1		1	
	25-31023- 32	M1		1	
	25-31023- 37	M1		2	
	25-31023- 39	M1		2	
	25-31023- 40			1	
	25-31023- 41	M1	46 - 3	1	
	25-31023- 42	M1	47 - 11	1	
	25-31023- 43	M1		1	
	25-31023- 45	M1		1	
	25-31023- 47			1	
	25-31023- 49			1	
	25-31023- 51			1	
	25-31023- 53			2	
	25-31023- 55		46 - 3	2	
	25-31023-301		47 -	1	
	25-31023-303		46 -	1	
	25-31024- 1	M1		1	F-14
	25-31024- 2	M1		1	
	25-31024- 3	M1		1	
	25-31024- 4	M1		1	
	25-31024- 11	M1		1	
	25-31024- 12	M1		1	
	25-31024- 17	M1		1	
	25-31024- 18	M1		1	
	25-31024- 19	M1		1	
	25-31024- 20	M1		1	
	25-31024- 21	M1		1	
	25-31024- 22	M1		1	
	25-31024- 23	M1		1	
	25-31024- 24	M1		1	
	25-31024- 25	M1		1	
	25-31024- 26	M1		1	
	25-31024- 27	M1		1	
	25-31024- 28	M1		1	
	25-31024- 29	M1		1	
	25-31024- 30	M1		1	
	25-31024- 31	M1		1	
	25-31024- 32	M1		1	
	25-31024- 33	M1		1	
	25-31024- 34	M1		1	
	25-31024- 35	M1		1	
	25-31024- 36	M1		1	
	25-31024- 37	M1		1	
	25-31024- 38	M1		1	
	25-31024- 39	M1		1	
	25-31024- 40	M1		1	
	25-31024- 41	M1		1	
	25-31024- 42	M1		1	
	25-31024- 43	M1		1	
	25-31024- 44	M1		1	
	25-31024- 45	M1		1	
	25-31024- 46	M1		1	
	25-31024- 47	M1		1	
	25-31024- 48	M1		1	
	25-31024- 49	M1		1	
	25-31024- 50	M1		1	
	25-31024- 51	M1		1	
	25-31024- 52	M1		1	
	25-31024- 53	M1		1	
	25-31024- 54	M1		1	
	25-31024- 55	M1		1	
	25-31024- 56	M1		1	
	25-31024- 57	M1		1	
	25-31024- 58	M1		1	
	25-31024- 59	M1		1	
	25-31024- 60	M1		1	
	25-31024- 63	M1		1	
	25-31024- 64	M1		1	
	25-31024- 65	M1		4	
	25-31024- 67	M1		10	

STOCK	PART NUMBER	SOURCE CODE	FIGURE & INDEX NO.	QTY. PER A/C	MICROFILM INDEX
	25-31024- 69	M1		1	
	25-31024- 70	M1		1	
	25-31024- 71	M1		1	
	25-31024- 72	M1		1	
	25-31024- 73	M1		1	
	25-31024- 74	M1		1	
	25-31024- 75	M1		1	
	25-31024- 76	M1		1	
	25-31024- 77	M1		1	
	25-31024- 78	M1		1	
	25-31024- 79	M1		1	
	25-31024- 81	M1		1	
	25-31024- 83	M1		1	
	25-31024- 85	M1		1	
	25-31024-301	M1		1	
	25-31025- 1	M1		1	F-15
	25-31025- 2	M1		1	
	25-31025- 5	M1		1	
	25-31025- 6	M1		1	
	25-31025- 7	M1		1	
	25-31025- 11	M1		1	
	25-31025- 12	M1		1	
	25-31025- 25	M1		1	
	25-31025- 27	M1		1	
	25-31025- 29	M1		1	
	25-31025- 35	M1		1	
	25-31025- 36	M1		1	
	25-31025- 37	M1		1	
	25-31025- 39	M1		1	
	25-31025- 40	M1		1	
	25-31025- 45	M1		1	
	25-31025- 47	M1		1	
	25-31025- 49	M1		1	
	25-31025- 51	M1		1	
	25-31025- 53	M1		1	
	25-31025- 59	M1		1	
	25-31025- 63	M1		1	
	25-31025- 64	M1		1	
	25-31025- 65	M1		1	
	25-31025- 67	M1		1	
	25-31025- 69	M1		1	
	25-31025- 70	M1		1	
	25-31025- 71	M1		1	
	25-31025- 72	M1		1	
	25-31025- 73	M1		1	
	25-31025- 74	M1		1	
	25-31025- 75	M1		1	
	25-31025- 77	M1		1	
	25-31025- 79	M1		1	
	25-31025- 80	M1		1	
	25-31025- 81	M1		1	
	25-31025- 85	M1		1	
	25-31025- 86	M1		1	
	25-31025- 87	M1		1	
	25-31025- 89	M1		1	
	25-31025- 91	M1		1	
	25-31025- 93	M1		1	
	25-31025- 95	M1		1	
	25-31025- 97	M1		2	
	25-31025- 99	M1		2	
	25-31025-101	M1		2	
	25-31025-103	M1		2	
	25-31025-105	M1		1	
	25-31025-107	M1		1	
	25-31025-109			1	
	25-31025-301	M1		1	
	25-31025-302	M1		1	
	25-31026- 1	M1		1	F-16
	25-31026- 2	M1		1	
	25-31026- 3	M1		2	
	25-31026- 4	M1		2	
	25-31026- 5	M1		1	
	25-31026- 9			3	
	25-31026- 10			2	
	25-31026-301	M1		1	
	25-31026-303			1	
	25-31026-304			1	
	25-31027- 1		46 -	1	F-17
	25-31027- 2	M1	47 -	1	
	25-31027- 3	M1	46 -129	1	
	25-31027- 4	M1	47 -102	1	
	25-31027- 5	M1		1	
	25-31027- 6	M1		1	
	25-31027- 7	M1		2	
	25-31028- 1		46 - 98	1	F-18
	25-31028- 2	M1	47 - 91	1	
	25-31028- 3	M1		1	
	25-31028- 4	M1		1	
	25-31028- 5	M1		3	
	25-31028- 7	M1		1	
	25-31028- 9	M1		1	
	25-31028- 11	M1		1	
	25-31028- 13	M1		4	
	25-31028- 15	M1		2	
	25-31028- 17	M1		4	
	25-31028- 19	M1		12	
	25-31028- 21	M1		1	
	25-31028- 23	M1		2	
	25-31028- 25	M1		1	
	25-31028- 27			1	
	25-31028- 28			1	
	25-31029- 1	M1	46 -	1	F-19 D-346
	25-31029- 2	M1	47 -	1	
	25-31029- 5	M1		1	
	25-31029- 11	M1		1	
	25-31029- 12	M1		1	
	25-31029- 13	M1		1	
	25-31029- 14	M1		1	
	25-31029- 15	M1		1	
	25-31029- 17	M1		1	
	25-31029- 19	M1		1	
	25-31029- 22	M1		1	
	25-31029- 23	M1		2	
	25-31029- 27	M1		2	
	25-31029- 29	M1		2	
	25-31029- 31	M1		1	
	25-31029- 32	M1		1	
	25-31029- 39	M1		1	
	25-31029- 40	M1		1	
	25-31029- 41	M1		2	
	25-31029- 43	M1		1	
	25-31029- 45	M1		1	
	25-31029- 46	M1		1	
	25-31029- 47	M1		1	
	25-31029- 49	M1		1	
	25-31029- 50	M1		1	
	25-31029- 51	M1		1	
	25-31029- 52	M1		1	
	25-31029- 53	M1		1	
	25-31029- 57	M1		1	
	25-31029- 59	M1		2	
	25-31029- 61	M1		1	
	25-31029- 62	M1		1	
	25-31029- 63	M1		1	
	25-31029- 64	M1		1	
	25-31029- 65	M1		1	
	25-31029- 67	M1		2	
	25-31029- 69	M1		4	
	25-31029- 71	M1		1	
	25-31029- 73	M1		1	
	25-31029- 74	M1		1	
	25-31029- 75	M1		1	
	25-31029- 76	M1		1	
	25-31029- 77	M1		2	
	25-31029- 79	M1		1	
	25-31029- 81	M1		1	
	25-31029- 82	M1		1	
	25-31029- 83	M1		1	
	25-31029- 84	M1		1	
	25-31029- 85	M1		2	
	25-31029- 87	M1		1	
	25-31029- 89	M1		1	
	25-31029- 91	M1		1	
	25-31029- 92	M1		1	
	25-31029- 93	M1		1	
	25-31029- 94	M1		1	
	25-31029- 97	M1		1	
	25-31029- 98	M1		1	
	25-31029- 99	M1		1	
	25-31029-100	M1		1	
	25-31029-101	M1		1	
	25-31029-102	M1		1	
	25-31029-103	M1		1	
	25-31029-105	M1		1	
	25-31029-107	M1		2	
	25-31029-109	M1	46 -106	1	
	25-31029-110	M1	47 -109	1	
	25-31029-111	M1		1	
	25-31029-113	M1		6	
	25-31029-115	M1		2	
	25-31029-117	M1		1	
	25-31029-119	M1	46 -109 47 -124	2	
	25-31029-121	M1		6	
	25-31029-123	M1		4	
	25-31029-125	M1		4	
	25-31029-127	M1		4	
	25-31029-129	M1		4	
	25-31029-131	M1		4	
	25-31029-133	M1		2	
	25-31029-135	M1		6	
	25-31029-137	M1		8	
	25-31029-139	M1		8	
	25-31029-141	M1		2	
	25-31029-143	M1		4	
	25-31029-145	M1		2	
	25-31029-147	M1		1	
	25-31029-149	M1		1	
	25-31029-151	M1		1	
	25-31029-152	M1		1	
	25-31029-153	M1		1	
	25-31029-154	M1		1	

STOCK	PART NUMBER	SOURCE CODE	FIGURE & INDEX NO.	QTY. PER A/C	MICROFILM INDEX
	25-31029-155	M1		1	
	25-31029-157	M1		1	
	25-31029-158	M1		1	
	25-31029-159	M1		1	
	25-31029-161	M1		4	
	25-31029-163	M1		1	
	25-31029-164	M1		1	
	25-31029-165	M1		1	
	25-31029-166	M1		1	
	25-31029-167	M1		2	
	25-31029-169	M1		2	
	25-31029-171	M1		2	
	25-31029-173	M1		1	
	25-31029-175	M1		1	
	25-31029-176	M1		1	
	25-31029-177	M1		1	
	25-31029-179	M1		1	
	25-31029-180	M1		1	
	25-31029-181	M1		1	
	25-31029-182	M1		1	
	25-31029-183	M1		1	
	25-31029-184	M1		1	
	25-31029-185	M1		1	
	25-31029-186	M1		1	
	25-31029-187	M1		1	
	25-31029-188	M1		1	
	25-31029-191	M1		1	
	25-31029-192	M1		1	
	25-31029-193	M1		1	
	25-31029-194	M1		1	
	25-31029-195	M1		1	
	25-31029-197	M1		1	
	25-31029-199	M1		1	
	25-31029-200			1	
	25-31029-201	M1		1	
	25-31029-203	M1		1	
	25-31029-205	M1		1	
	25-31029-207	M1		2	
	25-31029-209	M1		2	
	25-31029-211	M1		1	
	25-31029-212	M1		1	
	25-31029-213	M1		2	
	25-31029-215	M1		2	
	25-31029-219	M1		1	
	25-31029-221	M1		1	
	25-31029-223	M1		1	
	25-31029-225	M1		1	
	25-31029-227	M1		1	
	25-31029-229	M1		1	
	25-31029-231			1	
	25-31029-233			1	
	25-31029-235			2	
	25-31029-237			1	
	25-31029-239			2	
	25-31029-241			2	
	25-31029-243			1	
	25-31029-245			2	
	25-31029-247			1	
	25-31029-249			1	
	25-31030- 1	M1	49 -	1	C-409
	25-31091- 1	M1		1	XA-175
	25-31091- 3	M1		1	
	25-31091- 5	M1		1	
	25-31091- 7	M1		1	
	25-31091- 9	M1		1	
	25-31091- 11	M1		1	
	25-31091- 13	M1		1	
	25-31091- 15	M1		1	
	25-31091- 19	M1		1	
	25-31091- 21	M1		1	
	25-31091- 23	M1		1	
	25-31091- 25	M1		1	
	25-31091- 29	M1		1	
	25-31091- 31	M1		1	
	25-31091- 33	M1		1	
	25-31091- 35	M1		1	
	25-31091- 37	M1		1	
	25-31091- 39	M1		1	
	25-31091- 41	M1		1	
	25-31091- 43	M1		1	
	25-31091- 45	M1		1	
	25-31091- 47	M1		1	
	25-31091- 49	M1		1	
	25-31091- 51	M1		1	
	25-31091- 53	M1		1	
	25-31091- 55	M1		1	
	25-31091- 57			1	
	25-31091- 59			3	
	25-31091- 61			2	
	25-31091- 63			2	
	25-31091- 65			1	
	25-31091- 67			1	
	25-31091- 69			1	
	25-31091- 71			1	
	25-31091-301	M1		1	
	25-31091-303			1	

STOCK	PART NUMBER	SOURCE CODE	FIGURE & INDEX NO.	QTY. PER A/C	MICROFILM INDEX
R82MDA-	25-31032- 1	P1	46 -110	1	F-21
	25-31032- 3	X1		1	
	25-31033- 1	M1		1	XA-176
	25-31033- 5	M1		1	
	25-31033- 9	M1		1	
	25-31033- 11	M1		1	
	25-31033- 13	M1		1	
	25-31033- 15	M1		1	
	25-31033- 17	M1		1	
	25-31033- 19	M1		1	
	25-31033- 20	M1		1	
	25-31033- 21	M1		1	
	25-31033- 23	M1		1	
	25-31033- 25	M1		1	
	25-31033- 27	M1		1	
	25-31033- 29	M1		1	
	25-31033- 31	M1		1	
	25-31033- 33			1	
	25-31033- 35			1	
	25-31033- 37			1	
	25-31033- 39			1	
	25-31033- 41			1	
	25-31033-301	M1		1	
	25-31033-303			1	
	25-31034- 1	M1	46 -	1	F-23
	25-31034- 3	M1		1	
	25-31034- 5	M1		1	
	25-31034- 7	M1		1	
	25-31034- 9	M1		1	
	25-31034- 11	M1		1	
	25-31034- 13	M1		1	
	25-31034- 15	M1		1	
	25-31034- 17	M1		1	
	25-31035- 1		45 -	1	XA-177
	25-31035- 3	M1		1	
	25-31035- 5	M1		1	
	25-31035- 7	M1		1	
	25-31035- 9	M1		1	
	25-31035- 10	M1		1	
	25-31035- 11	M1		1	
	25-31035- 12	M1		1	
	25-31035- 15	M1		1	
	25-31035- 16	M1		1	
	25-31035- 17	M1		1	
	25-31035- 19	M1		2	
	25-31035- 21	M1		2	
	25-31035- 23	M1		1	
	25-31035- 25	M1		1	
	25-31035- 26	M1		1	
	25-31035- 27	M1		2	
	25-31035- 29	M1		3	
	25-31035- 31	M1		1	
	25-31035- 33	M1		2	
	25-31035- 35	M1		2	
	25-31035- 37	M1		2	
	25-31035- 39	M1		1	
	25-31035- 40	M1		1	
	25-31035- 41	M1		2	
	25-31035- 43	M1		1	
	25-31035- 45	M1		1	
	25-31035- 47	M1		1	
	25-31035- 49	M1		1	
	25-31035- 51	M1		1	
	25-31035- 53	M1		1	
	25-31035- 55	M1		1	
	25-31035- 56	M1		1	
	25-31035- 57	M1		1	
	25-31035- 58	M1		1	
	25-31035- 59	M1		1	
	25-31035- 61	M1		1	
	25-31035- 62	M1		1	
	25-31035- 63	M1		2	
	25-31035- 65	M1		1	
	25-31035- 66	M1		1	
	25-31035- 67	M1		1	
	25-31035- 68	M1		1	
	25-31035- 69	M1		1	
	25-31035- 71	M1		1	
	25-31035- 73	M1		1	
	25-31035- 74	M1		1	
	25-31035- 75	M1		1	
	25-31035- 77	M1		1	
	25-31035- 79	M1		1	
	25-31035- 81	M1		1	
	25-31035- 83	M1		1	
	25-31035- 85	M1		1	
	25-31035- 87	M1		1	
	25-31035- 89	M1		1	
	25-31035-301	M1	45 -	1	
	25-31035-303	M1	45 -	1	
	25-31036- 1	M1		1	F-25
	25-31036- 3	M1		1	
	25-31036- 5	M1		1	
	25-31036- 7	M1		1	
	25-31036- 9	M1		1	
	25-31036- 11	M1		1	

STOCK	PART NUMBER	SOURCE CODE	FIGURE & INDEX NO.	QTY. PER A/C	MICROFILM INDEX
	25-31036- 13	M1		1	
	25-31036- 15	M1		1	
	25-31036- 17	M1		1	
	25-31037- 1		45 -	1	F-20
	25-31037- 5	M1		1	
	25-31037- 7	M1		1	
	25-31037- 11	M1		1	
	25-31037- 13	M1		1	
	25-31037- 15	M1		1	
	25-31037- 23	M1		2	
	25-31037- 25	M1		1	
	25-31037- 27	M1		1	
	25-31037- 29	M1		2	
	25-31037- 31	M1		1	
	25-31037- 33	M1		1	
	25-31037- 35	M1		2	
	25-31037- 41	M1		1	
	25-31037- 45	M1		1	
	25-31037- 47	M1		1	
	25-31037- 49	M1		1	
	25-31037- 51	M1		1	
	25-31037- 53	M1		1	
	25-31037- 55	M1		1	
	25-31037- 59	M1		1	
	25-31037- 67	M1		1	
	25-31037- 69	M1		1	
	25-31037- 71	M1		1	
	25-31037- 73	M1		2	
	25-31037- 75	M1		1	
	25-31037- 77	M1		1	
	25-31037- 81	M1		1	
	25-31037- 83			1	
	25-31037- 85			1	
	25-31037- 87			1	
	25-31037- 89			1	
	25-31037- 91			2	
	25-31037- 93			1	
	25-31037- 95			1	
	25-31037- 97			1	
	25-31037- 99			1	
	25-31037-101			1	
	25-31037-103			2	
	25-31038- 1	P1	46 - 77	1	
	25-31038- 2	P1	47 - 67	1	
	25-31038- 3	X1		1	
	25-31038- 4	X1		1	
	25-31038- 5	M1		2	
	25-31038- 7	X1		1	
	25-31038- 8	X1		1	
	25-31038- 9	X1		1	
	25-31038- 10	X1		1	
	25-31038-301	P1	46 - 77	1	
	25-31038-302		47 - 67	1	
R82MDA-	25-31038-303		46 - 77	1	
R82MDA-	25-31038-304	P1	47 - 67	1	
	25-31039- 1	M1		1	F-27
	25-31039- 5	M1		1	
	25-31039- 9	M1		1	
	25-31039- 11	M1		1	
	25-31039- 15	M1		1	
	25-31040- 1		46 - 79	1	C-411
	25-31040- 2	P1	47 - 69	1	
	25-31040- 3	X1		1	
	25-31040- 4	X1		1	
	25-31040- 5	X1		1	
	25-31040- 6	X1		1	
	25-31040- 7	X1		1	
	25-31040- 8	X1		1	
	25-31040-301	P1	46 - 79	1	
	25-31040-302	P1	47 - 69	1	
R82MDA-	25-31040-303	P1	46 - 79	1	
R82MDA-	25-31040-304	P1	47 - 69	1	
	25-31041- 1	M1		1	XA-178
	25-31041- 7	M1		1	
	25-31041- 9	M1		1	
	25-31041- 11	M1		1	
	25-31041- 13	M1		1	
	25-31041- 15	M1		1	
	25-31041-301	M1		1	
	25-31042- 3		46 - 10	1	C-412
	25-31042- 4		47 - 9	1	
	25-31043- 3		46 -130	1	C-413
	25-31043- 4		47 -100	1	
	25-31044- 3		46 - 57	1	C-414
	25-31044- 4		47 - 59	1	
	25-31045- 3		46 - 63	1	F-29
	25-31045- 4		47 - 58	1	
	25-31046- 1		46 -	1	F-30 F-31
	25-31046- 2		47 -	1	
	25-31046- 3		46 - 62	3	
	25-31046- 3C	X1		3	
	25-31046- 4		47 - 57	3	
	25-31046- 4C	X1		3	
	25-31046- 5	M1		2	
	25-31047- 1		46 -	1	F-32 F-33
	25-31047- 2		47 -	1	
	25-31047- 3		46 - 64	1	
	25-31047- 3C	X1		1	
	25-31047- 4	X2	47 - 74	1	
	25-31047- 4C	X1		1	
	25-31047- 5	M1		2	
	25-31047- 7	M1		2	
	25-31048- 1			1	F-34 F-35
	25-31048- 3	X1		1	
	25-31048- 5	X1		1	
	25-31048- 7	X1		1	
	25-31048- 9	X1		1	
	25-31048- 11	X1		1	
	25-31048- 13	M1		1	
	25-31048- 17	X1		1	
	25-31048- 19	X1		1	
	25-31048- 21	X1		1	
	25-31048- 23	X1		1	
	25-31048- 25	M1		1	
	25-31048- 27	M1		1	
	25-31048- 29	M1		1	
	25-31048- 31	M1		1	
	25-31048- 33	M1		1	
	25-31048- 35	M1		1	
	25-31048- 37	M1		1	
	25-31048- 39	M1		1	
	25-31048- 40	M1		1	
	25-31048- 41	M1		1	
	25-31048- 43	M1		1	
	25-31048- 45	M1		1	
	25-31048- 47	M1		1	
	25-31048- 49	M1		1	
	25-31049- 3F	X1		1	C-415
	25-31049- 4F	X1		1	
	25-31050- 1			1	
	25-31050- 2			1	
	25-31050- 3			1	
	25-31050- 4			1	
	25-31050- 5			1	
	25-31050- 6			1	
	25-31050- 7			1	
	25-31050- 8			1	
	25-31050- 9			1	
	25-31050- 10			1	
	25-31050- 11			1	
	25-31050- 12			1	
	25-31050- 13			1	
	25-31050- 14			1	
	25-31050- 15			1	
	25-31050- 16			1	
	25-31050- 17			1	
	25-31050- 18			1	
	25-31050- 19			1	
	25-31050- 20			1	
	25-31050- 21			1	
	25-31050- 22			1	
	25-31050- 23			1	
	25-31050- 24			1	
	25-31050- 25			1	
	25-31050- 26			1	
	25-31050- 27			1	
	25-31050- 28			1	
	25-31050- 29			1	
	25-31050- 30			1	
	25-31050- 33			1	
	25-31050- 34			1	
	25-31050- 35			1	
	25-31050- 36			1	
	25-31050- 37			1	
	25-31050- 38			1	
	25-31050- 39			2	
	25-31050- 41			4	
	25-31050- 43			8	
	25-31050- 45			10	
	25-31050- 47			1	
	25-31050- 48			1	
	25-31050- 49			2	
	25-31050- 51			4	
	25-31050- 53			2	
	25-31050- 55			8	
	25-31050- 57			2	
	25-31050- 59			1	
	25-31050- 60			1	
	25-31050- 61			1	
	25-31050- 62			1	
	25-31050- 63			1	
	25-31050- 64			1	
	25-31050- 65			1	
	25-31050- 66			1	
	25-31050- 67			1	
	25-31050- 68			1	
	25-31050- 69			1	
	25-31050- 70			1	
	25-31050- 71			1	
	25-31050- 72			1	
	25-31050- 75			1	
	25-31050- 76			1	

STOCK	PART NUMBER	SOURCE CODE	FIGURE & INDEX NO.	QTY. PER A/C	MICROFILM INDEX
	25-31050- 79			1	
	25-31050- 80			1	
	25-31050- 81			1	
	25-31050- 82			1	
	25-31050- 83			1	
	25-31050- 84			1	
	25-31050- 85			1	
	25-31050- 86			1	
	25-31051- 1	X2	46 -132	2	F-36
	25-31051- 3	X1		2	
	25-31052- 1	X2	47 - 97	2	F-37
	25-31052- 3	X1		2	
R82MDA-	25-31053- 1	P1	46 -124	1	C-416
R82MDA-	25-31053- 2	P1	47 -105	1	
	25-31053- 3	X1		1	
	25-31053- 4	X1		1	
	25-31054- 3F	X1		2	F-38
	25-31055- 3F	X1		2	F-39
R82MDA-	25-31056- 1	P1	46 - 1 48 -	1	XA-179 XA-180
R82MDA-	25-31056- 2		47 - 1 48 -	1	
	25-31056- 3	M1		1	
	25-31056- 4	M1		1	
	25-31056- 5	M1		1	
	25-31056- 6	M1		1	
	25-31056- 8			1	
	25-31056- 9	M1		2	
	25-31056- 10	M1		1	
	25-31056- 11			1	
	25-31056- 12			1	
	25-31056- 13			1	
	25-31056- 14			1	
	25-31056- 15			1	
	25-31056- 16			1	
	25-31056- 17			1	
	25-31056- 18			1	
	25-31056- 19	M1		1	
	25-31056- 20	M1		1	
	25-31056- 21			1	
	25-31056- 22			1	
	25-31056- 23			1	
	25-31056- 24			1	
	25-31056- 25	M1		1	
	25-31056- 26	M1		1	
	25-31056- 27	M1		1	
	25-31056- 28	M1		1	
	25-31056- 29			1	
	25-31056- 30			1	
	25-31056- 31	M1		1	
	25-31056- 32	M1		1	
	25-31056- 33	M1		1	
	25-31056- 34	M1		1	
	25-31056- 35	M1		1	
	25-31056- 36	M1		1	
	25-31056- 39			1	
	25-31056- 40			1	
	25-31056- 41	M1		8	
	25-31056- 43	M1		12	
	25-31056- 45	M1		8	
	25-31056- 47	M1		1	
	25-31056- 48	M1		1	
	25-31056- 49			1	
	25-31056- 50			1	
	25-31056- 51	M1		1	
	25-31056- 52	M1		1	
	25-31056- 55	M1		8	
	25-31056- 57	M1		2	
	25-31056- 59	M1		1	
	25-31056- 60	M1		1	
	25-31056- 61	M1		1	
	25-31056- 62	M1		1	
	25-31056- 63	M1		1	
	25-31056- 64	M1		1	
	25-31056- 65	M1		1	
	25-31056- 66	M1		1	
	25-31056- 67	M1		1	
	25-31056- 68	M1		1	
	25-31056- 69	M1		1	
	25-31056- 70	M1		1	
	25-31056- 71	M1		1	
	25-31056- 72	M1		1	
	25-31056- 74	M1		1	
	25-31056- 75	M1		1	
	25-31056- 76	M1		1	
	25-31056- 79	M1		1	
	25-31056- 80	M1		1	
	25-31056- 81	M1		2	
	25-31056- 83	M1		3	
	25-31056- 84	M1		3	
	25-31056- 85	M1		3	
	25-31056- 86	M1		3	
	25-31056- 87	M1		3	
	25-31056- 88	M1		3	
	25-31056- 89	M1		3	
	25-31056- 90	M1		3	
	25-31056- 91	M1		3	
	25-31056- 92	M1		3	
	25-31056- 93	M1		3	
	25-31056- 94	M1		3	
	25-31056- 95	M1		3	
	25-31056- 96	M1		3	
	25-31056- 97	M1		3	
	25-31056- 98	M1		3	
	25-31056- 99	M1		10	
	25-31056-101	M1		8	
	25-31056-103	M1		4	
	25-31056-105	M1		6	
	25-31056-107			1	
	25-31056-108			1	
	25-31056-109			1	
	25-31056-110			1	
	25-31057- 3		46 - 4	1	
	25-31057- 4	M1	47 - 3	1	
	25-31058- 1	M1	46 - 20 47 - 19	2	B-408
	25-31058- 2	M1	46 - 21 47 - 20	2	
	25-31058- 5	M1	46 - 28 47 -	2	
	25-31058- 6	M1	46 - 28 47 - 26	2	
	25-31059- 1	P1	45 - 57 50 -	1	F-42
	25-31059- 5	M1		4	
	25-31059- 7	M1		1	
	25-31059- 9	M1		2	
	25-31059- 13	M1	50 - 37	1	
	25-31059- 15	M1	50 - 36	1	
	25-31059- 17		50 - 35	1	
	25-31059- 19	M1	50 - 34	2	
	25-31059- 21	M1		1	
	25-31059- 23	M1		1	
	25-31059-301	M1	45 - 57 50 -	1	
	25-31060- 3F	X1		2	F-43
	25-31061- 3F	X1		2	C-417
	25-31062- 3F	X1		2	
	25-31063- 3		45 - 31	2	B-409
	25-31064- 1		46 -	1	F-44
	25-31064- 2	M1	47 -	1	
	25-31064- 3	M1	46 - 70	1	
	25-31064- 4	M1	47 - 61	1	
	25-31064- 5	M1		2	
	25-31064- 7	M1		2	
	25-31064- 9	M1		2	
	25-31064- 11	M1		4	
	25-31064- 13	M1		1	
	25-31064- 15	M1		2	
	25-31064- 17	M1		2	
	25-31064- 19	M1		1	
	25-31064- 20	M1		1	
	25-31064- 41	M1		2	
	25-31064- 42	M1		2	
	25-31064- 45	M1		1	
	25-31064- 49	M1		1	
	25-31064- 51	M1		1	
	25-31064- 53	M1		1	
	25-31064- 55	M1		7	
	25-31064- 57	M1		1	
	25-31064- 59	M1		1	
	25-31064- 61	M1		2	
	25-31064- 63	M1		2	
	25-31064- 65	M1		2	
	25-31064- 67	M1		2	
	25-31064- 69	M1		2	
	25-31064- 71	M1		2	
	25-31064- 73	M1		2	
	25-31065- 1		46 - 61	1	C-419
	25-31065- 2		47 - 60	1	
	25-31065- 3	X2		2	
	25-31065- 4	X2		2	
	25-31066- 3		46 -100	1	C-420
	25-31066- 4	X2	47 - 92	1	
	25-31067- 3		46 - 56	1	C-421
	25-31067- 4	X2	47 - 56	1	
	25-31068- 1	M1		1	F-45 F-46
	25-31068- 2	M1		1	
	25-31068- 3	M1		1	
	25-31068- 4	M1		1	
	25-31068- 5	M1		1	
	25-31068- 6	M1		1	
	25-31068- 7	M1		1	
	25-31068- 8	M1		1	
	25-31068- 9	M1		1	
	25-31068- 10	M1		1	
	25-31068- 11	M1		1	
	25-31068- 12	M1		1	
	25-31068- 13	M1		2	
	25-31068- 15	M1		1	
	25-31068- 16	M1		1	
	25-31068- 17	M1		1	

STOCK	PART NUMBER	SOURCE CODE	FIGURE & INDEX NO.	QTY. PER A/C	MICROFILM INDEX
	25-31068- 18	M1		1	
	25-31068- 19	M1		1	
	25-31068- 20	M1		1	
	25-31068- 21	M1		1	
	25-31068- 22	M1		1	
	25-31068- 23	M1		1	
	25-31068- 24	M1		1	
	25-31068- 25	M1		1	
	25-31068- 26	M1		1	
	25-31068- 27	M1		1	
	25-31068- 28	M1		1	
	25-31068- 29	M1		1	
	25-31068- 30	M1		1	
	25-31068- 31	M1		1	
	25-31068- 32	M1		1	
	25-31068- 33	M1		1	
	25-31068- 34	M1		1	
	25-31068- 35	M1		1	
	25-31068- 36	M1		1	
	25-31068- 37	M1		1	
	25-31068- 38	M1		1	
	25-31068- 39	M1		1	
	25-31068- 40	M1		1	
	25-31068- 41	M1		1	
	25-31068- 42	M1		1	
	25-31068- 43	M1		1	
	25-31068- 44	M1		1	
	25-31069- 1	M1		1	F-47 F-48
	25-31069- 2	M1		1	
	25-31069- 3	M1		1	
	25-31069- 4	M1		1	
	25-31069- 5			1	
	25-31069- 6			1	
	25-31069- 7	M1		1	
	25-31069- 8	M1		1	
	25-31069- 9	M1		1	
	25-31069- 10	M1		1	
	25-31069- 11	M1		1	
	25-31069- 12	M1		1	
	25-31069- 13	M1		2	
	25-31069- 15	M1		1	
	25-31069- 16	M1		1	
	25-31069- 17	M1		1	
	25-31069- 18	M1		1	
	25-31069- 19			1	
	25-31069- 20	M1		1	
	25-31069- 21	M1		1	
	25-31069- 22	M1		1	
	25-31069- 23	M1		1	
	25-31069- 24	M1		1	
	25-31069- 25	M1		1	
	25-31069- 26	M1		1	
	25-31069- 27	M1		1	
	25-31069- 28			1	
	25-31069- 29	M1		1	
	25-31069- 30	M1		1	
	25-31069- 31	M1		1	
	25-31069- 32	M1		1	
	25-31069- 33	M1		1	
	25-31069- 34	M1		1	
	25-31069- 35	M1		1	
	25-31069- 36	M1		1	
	25-31069- 37	M1		1	
	25-31069- 38	M1		1	
	25-31069- 39	M1		1	
	25-31069- 40	M1		1	
	25-31069- 41	M1		1	
	25-31069- 42	M1		1	
	25-31069- 43	M1		1	
	25-31069- 44	M1		1	
	25-31070- 1	M1	46 -	1	D-345
	25-31070- 7	M1		1	
	25-31070- 9	M1		1	
	25-31070- 15	M1		2	
	25-31070- 19	M1		8	
	25-31070- 21			1	
	25-31070- 25	M1		1	
	25-31070- 27	M1		1	
	25-31070- 29	M1		1	
	25-31070- 48	M1		1	
	25-31070- 49	M1		1	
	25-31070- 51	M1		3	
	25-31070- 55	M1		1	
	25-31070- 59	M1		1	
	25-31070- 61	M1		1	
	25-31070- 67	M1		1	
	25-31070- 73	M1		1	
	25-31070- 75	M1		1	
	25-31070- 77	M1		1	
	25-31070- 79	M1		1	
	25-31070- 81	M1		2	
	25-31070- 87	M1		2	
	25-31070- 89	M1		1	
	25-31070- 91	M1		1	
	25-31070- 93	M1		1	
	25-31070- 95	M1		1	

STOCK	PART NUMBER	SOURCE CODE	FIGURE & INDEX NO.	QTY. PER A/C	MICROFILM INDEX
	25-31070- 97	M1		1	
	25-31070- 99	M1		1	
	25-31070-103	M1		1	
	25-31070-105	M1		1	
	25-31070-107	M1		1	
	25-31070-111	M1		1	
	25-31070-113	M1		1	
	25-31070-115	M1		1	
	25-31070-117	M1		1	
	25-31070-119	M1		1	
	25-31070-125	M1		1	
	25-31070-127	M1		2	
	25-31070-129	M1		1	
	25-31070-129	M1		1	
	25-31070-131	M1		1	
	25-31070-133	M1		1	
	25-31070-135	M1		1	
	25-31070-137	M1		1	
	25-31070-139	M1		2	
	25-31070-141			1	
	25-31070-143			1	
	25-31070-145			1	
	25-31070-147			1	
	25-31070-301	M1	46 -	1	
	25-31070-303	M1	46 -	1	
	25-31071- 1		47 -	1	F-48 F-90
	25-31071- 9			2	
	25-31071- 11	M1		1	
	25-31071- 13			1	
	25-31071- 17		47 -	1	
	25-31071- 18			1	
	25-31071- 25	M1		1	
	25-31071- 29	M1		1	
	25-31071- 31	M1		1	
	25-31071- 33	M1		1	
	25-31071- 35	M1		1	
	25-31071- 37	M1	47 -183	1	
	25-31071- 39	M1	47 -182	1	
	25-31071- 41	M1	47 -184	1	
	25-31071- 43	M1		1	
	25-31071- 45	M1		1	
	25-31071- 51	M1		1	
	25-31071- 53	M1		1	
	25-31071- 55	M1		1	
	25-31071- 57			1	
	25-31071- 61			1	
	25-31071- 63			1	
	25-31071- 65			1	
	25-31071- 67	M1		1	
	25-31071- 69	M1		1	
	25-31071- 71	M1		1	
	25-31071- 73	M1		1	
	25-31071- 75	M1		1	
	25-31071- 77	M1		1	
	25-31071- 79			1	
	25-31071- 81			1	
	25-31071- 83			1	
	25-31071- 85			1	
	25-31071- 87			1	
	25-31071- 89			1	
	25-31071- 91			2	
	25-31071- 93			2	
	25-31071-301			1	
	25-31071-303			1	
	25-31072- 3F	X1		2	C-422
	25-31072- 4F	X1		2	
	25-31073- 3F			1	
	25-31073- 4F	X1		1	C-423
	25-31074- 1	O	46 - 9	1	F-91
			52 -		
	25-31075- 1		52 - 1	1	C-424
	25-31075- 3	A	52 - 3	1	
	25-31075- 5	M1	52 -	3	
	25-31075- 7	A	52 - 2	1	
	25-31075- 9	M1	52 - 12	3	
	25-31076- 3	M1	52 - 18	1	A-200
	25-31076- 5	M1	52 - 10	2	
	25-31077- 3	M1	52 - 17	3	A-231
	25-31078- 3		52 - 19	3	A-232
	25-31079- 1		46 -	1	
	25-31079- 2		47 -	1	
	25-31079- 3			1	
	25-31079- 4	M1		1	
	25-31079- 5	M1	46 - 76	2	
			47 - 63		
	25-31079- 7	M1		0	
	25-31079- 9	M1		2	
	25-31079- 11	M1		2	
R82MDA-	25-31080- 3		46 - 63	1	
R82MDA-	25-31080- 4		47 - 83	1	
R82MDA-	25-31081- 3		46 - 83	1	F-93
R82MDA-	25-31081- 4		47 - 83	1	
	25-31082- 3F	X1		1	F-94
	25-31082- 4F	X1		1	
	25-31083- 3F	X1		1	
	25-31083- 4F	X1		1	

STOCK	PART NUMBER	SOURCE CODE	FIGURE & INDEX NO.	QTY. PER A/C	MICROFILM INDEX
	25-31084- 9		45 -	1	C-425
	25-31085- 1		45 - 29	1	F-56
	25-31085- 3	M1		1	
	25-31085- 4	M1		1	
	25-31085- 5	M1	45 - 30	1	
	25-31085- 7	M1		1	
	25-31085- 9	M1		2	
	25-31085- 11	M		2	
	25-31085- 13	M1		1	
	25-31085- 15			2	
	25-31085-301			1	
	25-31086- 1		45 -	1	F-57 D-346
	25-31086- 3	M1		1	
	25-31086- 5	M1		4	
	25-31086- 7	M1		1	
	25-31086- 9	M1		1	
	25-31086- 11	M1		1	
	25-31086- 13	M1		1	
	25-31086- 15	M1		1	
	25-31086- 17	M1		1	
	25-31086- 19	M1		1	
	25-31086- 21	M1		1	
	25-31086- 23	M1		1	
	25-31086- 25	M1		1	
	25-31086- 27	M1		1	
	25-31086- 29	M1		1	
	25-31086- 31	M1		1	
	25-31086- 37	M1		1	
	25-31086- 39	M1		1	
	25-31086- 40			1	
	25-31086- 41	M1		1	
	25-31086- 43	M1		1	
	25-31086- 45	M1		1	
	25-31086- 47		45 - 49	1	
	25-31086- 49	M1		1	
	25-31086- 51	M1		1	
	25-31086- 53	M1		1	
	25-31086- 55	M1		1	
	25-31086- 57	M1		1	
	25-31086- 59	M1		1	
	25-31086- 61	M1		1	
	25-31086- 63	M1	45 - 44	1	
	25-31086- 65	M1		1	
	25-31086- 67			1	
	25-31086- 69	M1		1	
	25-31086- 71	M1		1	
	25-31086- 73	M1		1	
	25-31086- 74			1	
	25-31086- 75			1	
	25-31086- 77	M1		1	
	25-31086- 79	M1		1	
	25-31086- 81	M1		2	
	25-31086- 83	M1		2	
	25-31086- 85	M1		1	
	25-31086- 87	M1		2	
	25-31086- 89	M1		1	
	25-31086- 91	M1		1	
	25-31086- 93	M1		1	
	25-31086- 95	M1		1	
	25-31086- 98	M1		1	
	25-31086-101	M1		1	
	25-31086-103	M1		1	
	25-31086-105	M1		1	
	25-31086-107			1	
	25-31086-109			1	
	25-31086-115			1	
	25-31086-117			1	
	25-31086-119			1	
	25-31086-121			1	
	25-31086-123			1	
	25-31086-125			2	
	25-31086-127			1	
	25-31086-129			1	
	25-31086-130			1	
	25-31086-131			2	
	25-31086-301			1	
	25-31086-303			1	
	25-31087- 1		45 - 46	1	F-59
	25-31087- 3	X1		1	
	25-31087- 3F	X1		1	
	25-31088- 1	M1	46 -	1	
	25-31088- 2	M1	47 -	1	
	25-31088- 3	M1		1	
	25-31088- 4	M1		1	
	25-31088- 5	M1		1	
	25-31088- 6	M1		1	
	25-31088- 9		46 - 71	2	
			47 - 62		
	25-31088- 11		46 - 72	2	
			47 - 63		
R82MDA-	25-31089- 1		46 - 97	1	
R82MDA-	25-31089- 2		47 - 87	1	
	25-31089- 3			1	
	25-31089- 4	X1		1	
	25-31089-3-4C	X1		2	
	25-31092- 3	M1		1	

STOCK	PART NUMBER	SOURCE CODE	FIGURE & INDEX NO.	QTY. PER A/C	MICROFILM INDEX
	25-31092- 4	M1		1	
	25-31093- 3F	X1		1	C-426
	25-31093- 4F	X1		1	
	25-31095- 1	M1	46 -	1	
	25-31095- 2	M1	47 -	1	
	25-31095- 3	M1	46 - 70	1	
	25-31095- 4	M1	47 - 61	1	
	25-31095- 5	M1		2	
	25-31095- 7	M1		2	
	25-31095- 9	M1		3	
	25-31095- 11	M1		10	
	25-31095- 13	M1		1	
	25-31095- 15	M1		1	
	25-31095- 17	M1		2	
	25-31095- 19	M1		1	
	25-31095- 21	M1		2	
	25-31095- 23	M1		1	
	25-31095- 25	M1		3	
	25-31095- 27	M1		7	
	25-31095- 29	M1		1	
	25-31095- 31	M1		2	
	25-31095- 33	M1		2	
	25-31095- 35	M1		2	
	25-31095- 37	M1		2	
	25-31095- 39	M1		1	
	25-31095- 41	M1		3	
	25-31096- 1	M1		1	F-69
	25-31096- 3	M1		1	
	25-31096- 5	M1		1	
	25-31097- 3	M1		1	B-410
	25-31097- 4	M1		1	
	25-31098- 3	M1		1	C-427
	25-31098- 5			2	
	25-31099- 3	M1		2	B-411
	25-31099- 5			2	
	25-31100- 3	M1		2	C-428
	25-31100- 4	M1		1	
	25-31101- 3			1	C-429
	25-31101- 4	M1		1	
R82MDA-	25-31102- 3		46 -127	2	C-430
		P1	47 -103		
	25-31103- 3		46 - 78	2	A-239
		M1	47 - 70		
	25-31103- 4	M1	46 - 80	2	
			47 - 68		
	25-31103- 5		46 - 80	1	
	25-31103- 6		47 - 70	1	
	25-31103- 7		46 - 78	1	
	25-31103- 8		47 - 68	1	
	25-31105- 3F			3	B-412
	25-31106- 3		52 - 9	1	A-234
	25-31106- 5		52 - 9	1	
	25-31106- 7		52 - 9	1	
	25-31108- 3		46 -121	8	A-33
			47 -101		
			108 -115		
	25-31109- 3		52 - 26	1	A-235
	25-31110- 3F			2	C-431
	25-31111- 1			1	F-65
	25-31111- 2	M1		1	
	25-31111- 3			1	
	25-31111- 4			1	
	25-31111- 5	M1		1	
	25-31111- 6	M1		1	
	25-31111- 9	M1		2	
	25-31111- 11	M1		2	
	25-31111- 12	M1		2	
	25-31112- 5			1	B-413
	25-31112- 6	M1		1	
R82MDA-	25-31113- 1		47 -110	1	F-66
	25-31113- 3	X1		1	
	25-31114- 3			1	D-414
	25-31114- 6	M1		1	
	25-31115- 3F			2	C-432
	25-31116- 5	P1	46 -128	2	C-433
			47 -104		
	25-31117- 3		46 -	2	
			47 -		
	25-31117- 7		46 -	2	
			47 -		
	25-31118- 1	M1		1	F-67
	25-31118- 2	M1		1	
	25-31118- 3	M1		1	
	25-31118- 6	M1		1	
	25-31118- 9	M1		1	
	25-31118- 11	M1		1	
	25-31118- 12	M1		1	
	25-31118- 13			1	
	25-31118- 16	M1		1	
	25-31118- 17	M1		1	
	25-31118- 19	M1		1	
	25-31118- 20	M1		1	
	25-31118- 21	M1		1	
	25-31118- 22	M1		1	
	25-31118- 23	M1		1	
	25-31118- 24	M1		1	

STOCK	PART NUMBER	SOURCE CODE	FIGURE & INDEX NO.	QTY. PER A/C	MICROFILM INDEX
	25-31118- 25	M1		1	
	25-31118- 26	M1		1	
	25-31118- 27	M1		2	
	25-31118- 29	M1		1	
	25-31118- 30	M1		1	
	25-31118-301	M1		1	
	25-31118-302	M1		1	
	25-31119- 1	M1		1	
	25-31119- 3			1	
	25-31119- 4			1	
	25-31119- 5		46 - 53	2	
	25-31119- 6		47 - 47	2	
	25-31119- 7			1	
	25-31119- 8			1	
	25-31119- 9			1	
	25-31119- 10			1	
	25-31120- 3		46 - 54	1	
	25-31120- 4		47 - 48	1	
	25-31121- 1			1	
	25-31121- 3			1	
	25-31121- 5			1	
	25-31122- 3	M1		1	C-434
	25-31122- 11			1	
	25-31122- 13	M1		1	
	25-31122- 15	M1		1	
	25-31122- 17			1	
	25-31122- 19			1	
	25-31122-301			1	
	25-31123- 3			2	
	25-31124- 3		47 -	3	A-236
	25-31125- 1		47 - 8	1	F-70
	25-31125- 3		46 - 9	1	
	25-31125- 4		47 - 8	1	
	25-31125- 5	M1		1	
	25-31125- 7	M1		1	
	25-31126- 1		46 - 52	1	C-435
	25-31126- 3			1	
	25-31127- 1		46 - 48	1	C-436
	25-31127- 3	M1		1	
	25-31128- 1	M1	46 - 45	1	F-71
	25-31128- 3	M1		1	
	25-31128- 5	M		1	
	25-31129- 3		52 - 27	1	A-237
	25-31130- 3		52 - 28	1	A-238
	25-31131- 1			1	F-72
	25-31131- 2	M1		1	
	25-31131- 3	M1		1	
	25-31131- 5	M1		1	
	25-31131- 7	M1		1	
	25-31132- 3			1	B-415
	25-31133- 3	M1	45 - 14	1	A-239
	25-31134- 1			2	F-73
	25-31134- 3	M1		2	
	25-31134- 5	M1		2	
	25-31134- 7	M1		2	
	25-31134- 9	M1		4	
	25-31135- 3	M1		1	
	25-31136- 3F	X1		2	F-74
	25-31136- 5F	X1		2	
	25-31137- 3	X2	46 - 55	1	F-75
	25-31137- 4		47 - 55	1	
	25-31137- 5		46 - 55	1	
	25-31137- 6		47 - 55	1	
	25-31138- 3F			2	C-437
	25-31139- 1		46 - 99	1	C-438
	25-31139- 3	X1		2	
	25-31139-301		46 - 99	1	
	25-31140- 1	M1		1	XA-89
	25-31140- 2	M1		1	
	25-31140- 3	M1		1	
	25-31140- 4	M1		1	
	25-31141- 1	M1		1	F-76
	25-31141- 2			1	
	25-31141- 3	M1		1	
	25-31141- 7	M1		1	
	25-31141- 9			1	
	25-31141- 10	M1		1	
	25-31141- 11	M1		1	
	25-31141- 13	M1		1	
	25-31141- 15	M1		1	
	25-31141- 17	M1		1	
	25-31141- 19			1	
	25-31141- 21			1	
	25-31141- 23	M1		1	
	25-31141- 24	M1		1	
	25-31141- 25	M1		1	
	25-31141- 27	M1		1	
	25-31141- 31	M1		1	
	25-31141- 33	M1		1	
	25-31141- 35	M1		1	
	25-31141- 37	M1		1	
	25-31141-301	M1		1	
	25-31142- 3			2	
	25-31142- 5			2	
	25-31143- 3			2	
	25-31144- 1		46 -	1	F-77
	25-31144- 2		47 -	1	
	25-31144- 3	M1		1	
	25-31144- 4	M1		1	
	25-31144- 17	M1		1	
	25-31144- 18	M1		1	
	25-31144- 19	M1		1	
	25-31144- 20	M1		1	
	25-31144- 21	M1		1	
	25-31144- 22	M1		1	
	25-31144- 23	M1	46 - 36	1	
	25-31144- 24	M1	47 - 34	1	
	25-31144- 25	M1	46 - 35	1	
	25-31144- 26	M1	47 - 33	1	
	25-31144- 27	M1	46 - 34	1	
	25-31144- 28	M1	47 - 32	1	
	25-31144- 29			1	
	25-31144- 30			1	
	25-31144- 31			1	
	25-31144- 32			1	
	25-31144- 33			1	
	25-31144- 34			1	
	25-31144- 35			1	
	25-31144- 36			1	
	25-31144- 37			1	
	25-31144- 38			1	
	25-31144- 39			1	
	25-31144- 40			1	
	25-31145- 3F	X1		2	F-78
	25-31146- 3	X1	45 - 26	1	F-79
	25-31146- 4	X1	45 - 26	1	
	25-31147- 3	M1		4	A-240
	25-31149- 3	M1		1	B-416
	25-31149- 4	M1		1	
	25-31150- 3			1	
	25-31151- 3	M1		1	B-417
	25-31152- 3	M1		1	B-418
	25-31153- 1	M1		1	F-80
	25-31153- 2	M1		1	
	25-31153- 3	M1		1	
	25-31153- 4	M1		1	
	25-31153- 5	M1		1	
	25-31153- 6	M1		1	
	25-31153- 7	M1		1	
	25-31153- 8	M1		1	
	25-31153- 9	M1		1	
	25-31153- 10	M1		1	
	25-31153- 11	M1		1	
	25-31153- 12	M1		1	
	25-31153- 13	M1		1	
	25-31153- 14	M1		1	
	25-31153- 15	M1		1	
	25-31153- 16	M1		1	
	25-31153- 17	M1		1	
	25-31153- 18	M1		1	
	25-31153- 19	M1		1	
	25-31153- 20	M1		1	
	25-31153- 21	M1		2	
	25-31153- 23	M1		1	
	25-31153- 24	M1		1	
	25-31153- 25	M1		1	
	25-31153- 26	M1		1	
	25-31153- 27	M1		3	
	25-31153- 28	M1		3	
	25-31153- 29	M1		1	
	25-31153- 30	M1		1	
	25-31153- 31			3	
	25-31153- 32			3	
	25-31153- 33			2	
	25-31153- 34			2	
	25-31153- 41			1	
	25-31153- 42			1	
	25-31153- 43			1	
	25-31153- 44			1	
	25-31153- 45			1	
	25-31153- 46			1	
	25-31153- 47			1	
	25-31153- 48			1	
	25-31153- 49			2	
	25-31153- 51			2	
	25-31153- 53			2	
	25-31153-301			1	
	25-31153-302			1	
	25-31154- 3	M1		1	A-242
	25-31154- 4	M1		1	
	25-31154- 5	M1		1	
	25-31154- 7	M1	50 - 5	1	
	25-31154- 8	M1	50 - 6	1	
	25-31154- 9	M1	50 - 7	1	
	25-31156- 5	M1		1	B-420
	25-31156- 6	M1		1	
	25-31157- 3	M1		1	C-439
	25-31157- 4	M1		1	
	25-31158- 1	M1		2	C-440
	25-31158- 3	M1		2	
	25-31158- 5	M1		2	
	25-31158- 7	M1		2	

STOCK	PART NUMBER	SOURCE CODE	FIGURE & INDEX NO.	QTY. PER A/C	MICROFILM INDEX
	25-31158- 9	M1		2	
	25-31158- 11	M1		2	
	25-31159- 1	M1		1	F-81
	25-31159- 3	M1		1	
	25-31159- 5	M1		1	
	25-31159- 7	M1		1	
	25-31159- 9	M1		2	
	25-31160- 3	M1		1	B-421
	25-31160- 4	M1		1	
	25-31161- 3	M1		1	B-422
	25-31162- 3	M1		1	B-423
	25-31163- 3	M1		1	C-441
	25-31164- 3	M1		1	F-82
	25-31164- 7	M1		1	
	25-31164- 8	M1		1	
	25-31164- 19	M1		5	
	25-31164- 21	M1		1	
	25-31164- 23	M1		1	
	25-31164- 25	M1		1	
	25-31164- 29	M1		4	
	25-31164- 45	M1		4	
	25-31164- 46	M1		9	
	25-31164- 47	M1		1	
	25-31164- 49	M1		1	
	25-31164- 65	M1		1	
	25-31164- 67	M1		1	
	25-31164- 69	M1		1	
	25-31164- 71	M1		1	
	25-31164- 79	M1		1	
	25-31164- 81	M1		2	
	25-31164- 83	M1		2	
	25-31164- 85	M1		1	
	25-31164- 87	M1		1	
	25-31164- 89			1	
	25-31164- 91	M1		1	
	25-31164- 93	M1		1	
	25-31164- 95	M1		1	
	25-31164- 97	M1		1	
	25-31164-101	M1		1	
	25-31164-103	M1		1	
	25-31164-105	M1		1	
	25-31164-107	M1		1	
	25-31164-109	M1		1	
	25-31164-111	M1		1	
	25-31164-113	M1		2	
	25-31164-115	M1		4	
	25-31164-117	M1		2	
	25-31164-119	M1		1	
	25-31164-121	M1		1	
	25-31164-123	M1		1	
	25-31164-125	M1		1	
	25-31164-127	M1		1	
	25-31164-129	M1		2	
	25-31164-131	M1		1	
	25-31164-133	M1		1	
	25-31164-135			1	
	25-31164-137			1	
	25-31164-139			1	
	25-31164-147			1	
	25-31164-155	M1		1	
	25-31164-157	M1		1	
	25-31164-159	M1		4	
	25-31165- 1	M1	46 -	1	F-83
	25-31165- 5	M1		1	
	25-31165- 6			1	
	25-31165-302			1	
	25-31166- 3	X2	45 - 41	1	F-84
	25-31166- 3C	X1		1	
	25-31166- 4	X2	45 - 42	1	
	25-31166- 4C	X1		1	
	25-31167- 1		45 -	1	F-85
	25-31167- 3	M1		1	
	25-31167- 5	M1		1	
	25-31167- 9			1	
	25-31167- 11			1	
	25-31167- 13	M1		1	
	25-31167- 15	M1		1	
	25-31167- 19	M1		1	
	25-31167- 21	M1		1	
	25-31167- 23	M1		1	
	25-31167- 27	M1		1	
	25-31167- 29	M1		1	
	25-31167- 31	M1		2	
	25-31167- 35	M1		1	
	25-31167- 37	M1		1	
	25-31167- 39	M1		1	
	25-31167- 41	M1		1	
	25-31167- 43	M1		1	
	25-31167- 45	M1		2	
	25-31167- 49	M1		1	
	25-31167- 51			1	
	25-31167- 53			1	
	25-31167-301	M1	45 -	1	
	25-31168- 5	M1		1	C-442
	25-31168- 6	M1		1	
	25-31169- 5	M1		1	C-443
	25-31169- 6			1	
	25-31170- 1		46 - 47	1	C-444
	25-31170- 3	M1		1	
	25-31171- 3	M1		1	B-424
	25-31171- 4	M1		1	
	25-31172- 3	M1		1	B-425
	25-31172- 4	M1		1	
	25-31173- 3	M1	45 - 23	2	B-426
	25-31174- 1	M1		1	B-427
	25-31174- 2	M1		1	
	25-31174- 3	M1		1	
	25-31174- 4			1	
	25-31175- 1		46 -	1	XA-181 XA-182
	25-31175- 2		47 -	1	
	25-31175- 3			1	
	25-31175- 5	M1		1	
	25-31175- 6	M1		1	
	25-31175- 7			1	
	25-31175- 8	M1		1	
	25-31175- 9	M1		1	
	25-31175- 10	M1		1	
	25-31175- 11	M1		1	
	25-31175- 12	M1		1	
	25-31175- 13	M1		1	
	25-31175- 14	M1		1	
	25-31175- 15	M1		1	
	25-31175- 16	M1		1	
	25-31175- 17	M1		1	
	25-31175- 18	M1		1	
	25-31175- 19	M1		1	
	25-31175- 20	M1		1	
	25-31175- 21	M1		1	
	25-31175- 22	M1		1	
	25-31175- 23	M1		1	
	25-31175- 24	M1		1	
	25-31175- 25	M1		1	
	25-31175- 26	M1		1	
	25-31175- 27	M1		1	
	25-31175- 28	M1		1	
	25-31175- 29	M1		1	
	25-31175- 30	M1		1	
	25-31175- 31	M1		1	
	25-31175- 32	M1		1	
	25-31175- 33	M1		1	
	25-31175- 34	M1		1	
	25-31175- 35	M1		1	
	25-31175- 36	M1		1	
	25-31175- 39	M1		1	
	25-31175- 40	M1		1	
	25-31175- 41	M1		1	
	25-31175- 42	M1		1	
	25-31175- 45	M1		1	
	25-31175- 46	M1		1	
	25-31175- 47	M1		1	
	25-31175- 48	M1		1	
	25-31175- 49	M1		1	
	25-31175- 50			1	
	25-31175- 51	M1		1	
	25-31175- 52	M1		1	
	25-31175- 53	M1		1	
	25-31175- 54	M1		1	
	25-31175- 55	M1		1	
	25-31175- 56	M1		1	
	25-31175- 57	M1		2	
	25-31175- 59			1	
	25-31175- 61	M1		4	
	25-31175- 63	M1		2	
	25-31175- 65	M1		4	
	25-31175- 67	M1		2	
	25-31175- 69	M1		1	
	25-31175- 70	M1		1	
	25-31175- 71	M1		2	
	25-31175- 73	M1		2	
	25-31175- 75	M1		1	
	25-31175- 76	M1		1	
	25-31175- 77	M1	46 - 8 47 - 7	2	
	25-31175- 79	M1		1	
	25-31175- 80	M1		1	
	25-31175- 81	M1		2	
	25-31175- 83	M1		2	
	25-31175- 85	M1		1	
	25-31175- 86	M1		1	
	25-31175- 87	M1		1	
	25-31175- 89			1	
	25-31175- 91	M1		1	
	25-31175- 93	M1		1	
	25-31175- 94	M1		1	
	25-31175- 95	M	46 - 6 47 - 5	2	
	25-31175- 97	M	46 - 5 47 - 4	2	
	25-31175- 99			2	
	25-31175-100			2	
	25-31175-101			2	
	25-31175-102			2	

STOCK	PART NUMBER	SOURCE CODE	FIGURE & INDEX NO.	QTY. PER A/C	MICROFILM INDEX
	29-31176- 9		52 - 29	1	A-243
	29-31177- 9		52 - 30	1	A-244
	29-31178- 9		52 - 30	1	B-428
	29-31179- 1		52 - 35	1	A-245
	29-31179- 5	M1		1	
	29-31180- 9	M1	52 - 31	1	
R82MDA-	29-31181- 9		52 - 32	1	A-246
	29-31182- 9			2	B-429
	29-31182- 9	M1		1	
	29-31183- 3		46 - 73	1	C-445
	29-31183- 4	M1	47 - 84	1	
	29-31183- 5	M1	46 - 73	1	
	29-31183- 6	M1	47 - 64	1	
	29-31184- 1		46 -107	1	F-88
	29-31185- 1	M1		1	A-247
	29-31186- 9	M1		2	
	29-31186- 9	M1		2	
	29-31187- 9			2	
	29-31188- 9			6	
	29-31189- 3		46 -139	1	
	29-31190- 9		46 -140	1	
	29-31191- 9	M1		1	XA-90
	29-31191- 5	M1		1	
	29-31191- 7	M1		1	
	29-31192- 9			1	XA-91
	29-31192- 5	M1		1	
	29-31192- 7	M1		1	
	29-31194- 3	M1		1	B-430
	29-31194- 4	M1		1	
	29-31194- 5	M1		1	
	29-31194- 6	M1		1	
	29-31195- 3	M1		1	B-431
	29-31195- 4	M1		1	
	29-31196- 3		46 - 49	1	C-448
	29-31196- 4		47 - 44	1	
	29-31197- 1		46 -	1	
	29-31197- 2		47 -	1	
	29-31197- 3	M1		1	
	29-31197- 4	M1		1	
	29-31197- 5		46 - 90	2	
			47 - 46		
	29-31197- 7	M1		2	
	29-31197- 9			1	
	29-31197-301			1	
	29-31198- 1		46 -	1	C-449
	29-31198- 2		47 -	1	
	29-31198- 7			1	
	29-31198- 8			1	
	29-31198- 9			2	
	29-31198- 10			2	
	29-31198- 11			2	
	29-31198- 12			2	
	29-31198-301		46 -	1	
	29-31198-302		47 -	1	
	29-31199- 1	M1		1	F-90
	29-31199- 3	M1		1	
	29-31199- 5	M1		1	
	29-31199- 7	M1		1	
	29-31199- 9			1	
	29-31199- 11	M1		1	
	29-31200- 1	M1	46 -102	1	XA-92
	29-31200- 3	M1	46 -102	1	
	29-31200- 5	M1		1	
	29-31201- 5		47 - 84	1	XA-183
	29-31201- 7	M1	47 - 84	1	
	29-31202- 3		45 - 37	2	B-432
	29-31203- 1		46 - 84	1	B-433
	29-31203- 2		47 - 75	1	
	29-31204- 3		46 -	1	A-248
	29-31205- 1	M1		1	F-93
	29-31205- 2	M1		1	
	29-31205- 3	M1		1	
	29-31205- 4	M1		1	
	29-31205- 5	M1		1	
	29-31205- 6	M1		1	
	29-31205- 9	M1		2	
	29-31205- 11	M1		2	
	29-31205- 13	M1		1	
	29-31205- 14	M1		1	
	29-31205- 15	M1		1	
	29-31205- 16	M1		1	
	29-31205- 17			1	
	29-31205-301			1	
	29-31205-302			1	
	29-31206- 1	M1		1	F-94
	29-31206- 2	M1		1	
	29-31206- 3			1	
	29-31206- 5	M1		1	
	29-31206- 7	M1		1	
	29-31206- 9	M1		1	
	29-31206- 11	M1		2	
	29-31207- 1	M1		2	C-451
	29-31207- 3	M1		2	
	29-31208- 3		46 - 68	1	B-434
	29-31208- 4		47 - 72	1	
	29-31209- 1		46 - 66	1	C-452

STOCK	PART NUMBER	SOURCE CODE	FIGURE & INDEX NO.	QTY. PER A/C	MICROFILM INDEX
	29-31209- 2		47 - 71	1	
R82MDA-	29-31210- 1	P1	45 - 20	1	F-99
	29-31210- 3	M1		1	
	29-31211- 1	M1		1	C-453
	29-31211- 5	M1		1	
	29-31211- 7			1	
	29-31211- 9			1	
	29-31211-301			1	
	29-31212- 1			1	C-454
	29-31212- 3	M1		9	
	29-31212- 5			1	
	29-31212- 7			1	
	29-31213- 1			1	B-435
	29-31213- 3			2	
	29-31213- 5			1	
	29-31214- 1			1	B-436
	29-31214- 3			1	
	29-31214- 5			1	
	29-31214- 7			1	
	29-31214- 9	M1		2	
	29-31215- 1	M1		1	B-437
	29-31215- 3	M1		1	
	29-31215- 5	M1		1	
	29-31215- 7	M1		1	
	29-31215- 9	M1		1	
	29-31216- 1	M1		1	B-438
	29-31216- 3	M1		1	
	29-31216- 5	M1		1	
	29-31216- 7	M1		1	
	29-31217- 1	M1	46 - 43	1	F-96
			48 -		
	29-31217- 2		47 - 42	1	
			48 -		
	29-31217- 3	M1	49 - 6	1	
	29-31217- 4	M1	49 - 6	1	
	29-31217- 5	M1	49 - 4	2	
	29-31217- 7		49 - 5	2	
	29-31217- 11		49 - 3	4	
	29-31217- 13		49 - 7	2	
	29-31217-301		46 - 49	1	
			48 -		
	29-31217-302		47 - 42	1	
			48 -		
	29-31218- 1	M1		1	B-439
	29-31218- 2	M1		1	
	29-31218- 3	M1		1	
	29-31218- 4	M1		1	
	29-31219- 1			2	A-249
	29-31219- 3	M1		2	
	29-31220- 1	M1		1	XA-93
	29-31220- 3	M1		1	
	29-31220- 5	M1		1	
	29-31220- 7			1	
	29-31221- 3	M1		3	A-250
	29-31222- 1	M1		1	F-97
	29-31222- 2	M1		1	
	29-31222- 5			1	
	29-31222- 6	M1		1	
	29-31222- 7	M1		1	
	29-31222- 8	M1		1	
	29-31222- 9	M1		1	
	29-31222- 10	M1		1	
	29-31223- 3		45 - 65	2	B-440
	29-31224- 3		45 - 19	2	A-99
	29-31225- 3			1	A-251
	29-31226- 1			1	F-98
	29-31226- 3	M1		1	
	29-31226- 5	M1		1	
	29-31226- 7	M1		1	
	29-31226- 9	M1		1	
	29-31226- 11	M1		1	
	29-31227- 1	M1		1	
	29-31227- 3	M1		1	
	29-31227- 4	M1		1	
	29-31227- 5	M1		1	
	29-31227- 6	M1		1	
	29-31228- 3		45 - 90	2	B-441
	29-31229- 3	M1		1	
	29-31229- 4	M1		1	
	29-31230- 3	M1		1	
	29-31230- 4	M1		1	
	29-31231- 3		46 - 12	1	B-444
	29-31231- 4	M1	47 - 10	1	
	29-31232- 3	M1		2	
	29-31232- 4	M1		1	
R82MDA-	29-31234- 3	P1	45 - 98	1	
R82MDA-	29-31234- 5	P1	45 - 99	1	
	29-31235- 3	M1		1	C-457
	29-31235- 4	M1		1	
	29-31236- 3	M1		1	C-458
	29-31236- 4	M1		1	
	29-31237- 1			1	
	29-31237- 2			1	
	29-31237- 3			1	
	29-31237- 4			1	
	29-31237- 5			1	

STOCK	PART NUMBER	SOURCE CODE	FIGURE & INDEX NO.	QTY. PER A/C	MICROFILM INDEX
	25-31237- 6			1	
	25-31237- 7			1	
	25-31237- 8			1	
	25-31237- 9			2	
	25-31237- 11			2	
	25-31238- 1	M1		1	B-447
	25-31238- 2	M1		1	
	25-31238- 3			1	
	25-31238- 4			1	
	25-31238- 5	M1		2	
	25-31238- 6	M1		2	
	25-31239- 1			1	B-448
	25-31239- 3	M1		1	
	25-31239- 5	M1		1	
	25-31239- 7	M1		1	
	25-31240- 3			1	
	25-31241- 3F	X1		2	B-449
	25-31242- 1			1	
	25-31242- 2			1	
	25-31242- 3			1	
	25-31242- 4			1	
	25-31242- 5			1	
	25-31242- 6			1	
	25-31242- 7			1	
	25-31242- 8			1	
	25-31243- 3	M1	46 - 2	2	A-252
	25-31243- 4	M1	47 - 2	2	
	25-31244- 1	M1		1	A-253
	25-31244- 2	M1		1	
	25-31244- 3	M1		1	
	25-31244- 4	M1		1	
	25-31245- 1	M1		1	B-450
	25-31245- 2	M1		1	
	25-31245- 3	M1		1	
	25-31245- 4	M1		1	
	25-31246- 3	M1	50 - 30	28	
			50 - 31		
			50 - 32		
			50 - 33		
	25-31246- 5	M1	50 - 29	2	
			50 - 31		
	25-31246- 7		50 - 29	2	
	25-31247- 1	M1		1	F-100
	25-31247- 3	M1		1	
	25-31247- 5	M1		1	
	25-31247- 7	M1		1	
	25-31247-301	M1		1	
	25-31248- 1			1	F-101
	25-31248- 3	M1		1	
	25-31248- 5	M1		1	
	25-31248- 7	M1		1	
	25-31248-301			1	
	25-31249- 3			1	B-451
	25-31249- 4	M1		1	
	25-31249- 5	M1		1	
	25-31250- 3	M1		1	B-452
	25-31250- 4	M1		1	
	25-31251- 3	M1		1	B-453
	25-31251- 4	M1		1	
	25-31252- 3	M1		2	B-454
	25-31253- 3	M1		1	C-459
	25-31254- 1	M1		2	F-102
	25-31254- 3	M1		2	
	25-31254- 5	M1		2	
	25-31254- 9	M1		2	
	25-31254- 11	M1		2	
	25-31254- 13	M1		2	
	25-31254- 15	M1		1	
	25-31255- 3	M1		1	F-103
	25-31256- 3	M1	45 - 40	2	B-455
	25-31257- 3			1	B-456
	25-31257- 5	M1		2	
	25-31258- 3	M1		1	B-457
	25-31258- 4	M1		1	
	25-31259- 1	M1		1	XB-15
	25-31259- 2	M1		1	
	25-31259- 5	M1		1	
	25-31259- 6	M1		1	
	25-31259- 7	M1		2	
	25-31259- 8	M1		2	
	25-31260- 1	M1		1	F-105
	25-31260- 2	M1		1	
	25-31260- 3	M1		1	
	25-31260- 4	M1		1	
	25-31262- 1	M1		2	B-458
	25-31262- 3	M1		2	
	25-31263- 1	M1		1	C-460
	25-31263- 3	M1		1	
	25-31263- 5	M1		1	
	25-31263- 7	M1		2	
	25-31264- 1	M1		1	B-459
	25-31264- 3	M1		1	
	25-31264- 5	M1		1	
	25-31264- 7	M1		1	
	25-31264- 9	M1		2	
	25-31265- 1	M1		1	B-460

STOCK	PART NUMBER	SOURCE CODE	FIGURE & INDEX NO.	QTY. PER A/C	MICROFILM INDEX
	25-31265- 3			1	
	25-31265- 5	M1		2	
	25-31266- 1	M1		1	B-461
	25-31266- 3			1	
	25-31266- 5	M1		1	
	25-31266- 7	M1		2	
	25-31267- 3		46 -137	1	F-107
	25-31267- 5		46 -137	1	
	25-31268- 1		46 -	1	C-461
	25-31268- 2		47 -	1	
	25-31268- 3	M1		1	
	25-31268- 4	M1		1	
	25-31268- 15	M1		2	
	25-31268- 17	M1		1	
	25-31268- 18	M1		1	
	25-31268- 19		46 - 33	2	
			47 - 31		
	25-31268- 21	M1		1	
	25-31268- 22	M1		1	
	25-31268- 23	M1		1	
	25-31268- 24	M1		1	
	25-31268- 25		46 - 32	2	
			47 - 30		
	25-31269- 5	M1	46 - 11	1	A-255
	25-31270- 1	M1		1	F-108
	25-31270- 2	M1		1	
	25-31270- 3	M1		1	
	25-31270- 4	M1		1	
	25-31271- 5	M1		1	D-348
	25-31271- 6	M1		1	
	25-31272- 3	M1		1	D-349
	25-31272- 4	M1		1	
	25-31273- 1	M1		2	B-462
	25-31273- 2	M1		2	
	25-31273- 3			2	
	25-31273- 4			2	
	25-31273- 5	M1		4	
	25-31273- 7	M1		4	
	25-31273- 9	M1		4	
	25-31273- 10	M1		4	
	25-31274- 1	M1		1	B-463
	25-31274- 2	M1		1	
	25-31274- 3	M1		1	
	25-31274- 4	M1		1	
	25-31276- 3	M1		1	C-462
	25-31276- 4	M1		1	
	25-31277- 3	M1		1	C-463
	25-31277- 5	M1		1	
	25-31278- 1		46 -108	6	B-464
			47 -168		
	25-31278- 3	M1		6	
	25-31279- 1	M1	46 -	1	F-109
	25-31279- 5	M1		1	
	25-31279- 7	M1		1	
	25-31279- 9			1	
	25-31279- 11			1	
	25-31279- 13	M1		1	
	25-31279- 15	M1		1	
	25-31279-301	M1	46 -	1	
	25-31279-303			1	
	25-31279-305			1	
	25-31280- 1		47 -	1	
R82MDA-	25-31280- 3		47 -129	1	
R82MDA-	25-31280- 13		47 -129	1	
	25-31280- 15	M1		1	F-110
	25-31280- 17	M1		7	
	25-31280- 19		47 -127	1	
	25-31280- 21		47 -128	1	
	25-31280- 23	M1		1	
	25-31280- 25	M1		1	
	25-31280- 27	M1		1	
	25-31280- 28	M1		1	
	25-31280- 29			1	
	25-31280-301		47 -	1	
	25-31281- 3		46 -101	1	
	25-31281- 4		47 - 93	1	
	25-31281- 5		46 -101	1	
	25-31281- 6		47 - 93	1	
	25-31282- 1	M1		1	F-111
	25-31282- 3	M1		2	
	25-31282- 11			1	
	25-31282- 13			1	
	25-31282- 15	M1		1	
	25-31283- 1	M1		1	C-464
	25-31283- 5	M1		1	
	25-31283- 7	M1		1	
	25-31283- 9	M1		1	
	25-31283-301	M1		1	
	25-31284- 5		48 - 2	20	
	25-31285- 3		48 - 25	8	
	25-31286- 3		48 - 29	8	
	25-31287- 3		48 - 26	4	
	25-31288- 3		48 - 14	12	
	25-31289- 3		48 - 27	8	
	25-31290- 3	M1		2	A-259
	25-31290- 5		48 - 28	4	

STOCK	PART NUMBER	SOURCE CODE	FIGURE & INDEX NO.	QTY. PER A/C	MICROFILM INDEX
	25-31291- 3		48 - 12	6	
	25-31291- 5		48 - 10	4	
	25-31291- 7			2	B-469
	25-31292- 3		48 -	2	
	25-31292- 4		48 - 21	2	
	25-31293- 3	M1		1	B-471
	25-31293- 4	M1		1	
	25-31293- 5		48 -	1	
	25-31293- 6		48 - 17	1	
	25-31294- 5			12	B-472
	25-31294- 7		46 - 31	18	
			46 - 37		
			47 - 29		
			47 - 35		
	25-31295- 3	M1	46 -	12	A-260
			47 -		
	25-31296- 1		46 -	1	C-465
	25-31296- 2		47 -	1	
	25-31296- 3	M1		1	
	25-31296- 5	M1		1	
	25-31297- 5		46 -139	2	A-261
	25-31297- 7	M1	46 -140	1	
	25-31297- 9		46 -141	1	
	25-31298- 1			1	
	25-31298- 2			1	
	25-31298- 3			1	
	25-31298- 4			1	
	25-31299- 3			2	
	25-31299- 5			1	
	25-31300- 3			1	B-473
	25-31300- 4	M1		1	
	25-31300- 5			1	
	25-31300- 6			1	
	25-31301- 1		46 -	1	F-112
	25-31301- 2		47 -	1	
	25-31301- 3		46 - 18	1	
	25-31301- 4		47 - 17	1	
	25-31301- 5	M1		1	
	25-31301- 6	M1		1	
	25-31301- 7	M1		1	
	25-31301- 8	M1		1	
	25-31301- 9	M1		1	
	25-31301- 10	M1		1	
	25-31302- 1			1	
	25-31302- 3			1	
	25-31302- 5			1	
	25-31302- 7			1	
	25-31302- 9			1	
	25-31302- 11			1	
	25-31302- 13			1	
	25-31303- 3	M1		1	C-466
	25-31303- 5	M1		2	
	25-31304- 3	M1		1	A-262
	25-31304- 4	M1		1	
	25-31305- 1	M1		1	F-113
	25-31305- 3	M1		1	
	25-31305- 11	M1		1	
	25-31305- 13	M1		1	
	25-31305- 15	M1		1	
	25-31306- 1	M1		1	C-467
	25-31306- 2	M1		1	
	25-31306- 3	M1		1	
	25-31306- 5	M1		1	
	25-31307- 1			1	
	25-31307- 2			1	
	25-31307- 3			1	
	25-31307- 4			1	
	25-31307- 5			2	
	25-31307- 7			1	
	25-31307- 9			2	
	25-31307- 11			1	
	25-31307- 12			1	
	25-31307- 13			2	
	25-31307- 15			1	
	25-31307- 16			1	
	25-31307- 17			1	
	25-31307- 18			1	
	25-31308- 1		47 - 40	1	B-474
	25-31308- 5	M1		1	
	25-31309- 1	M1		1	C-468
	25-31309- 3	M1		1	
	25-31310- 3	M1		1	A-263
	25-31310- 4	M1		1	
	25-31311- 3	M1		1	A-264
	25-31311- 4	M1		1	
	25-31312- 3	M1		3	A-265
	25-31313- 3		48 - 32	8	B-475
	25-31317- 3			1	
R82MDA-	25-31318- 1		49 - 1	2	B-479
	25-31318- 3			2	
	25-31318- 5	X1		2	
	25-31319- 1	M1	47 -	1	F-114
	25-31319- 3	M1		1	
	25-31319- 5	M1		1	
	25-31319- 9	M1		1	
	25-31319-301		47 -	1	

STOCK	PART NUMBER	SOURCE CODE	FIGURE & INDEX NO.	QTY. PER A/C	MICROFILM INDEX
	25-31320- 3		48 - 1	2	
	25-31320- 4		48 - 1	2	
	25-31321- 1	M1		1	C-471
	25-31321- 2	M1		1	
	25-31321- 3	M1		2	
	25-31321- 4	M1		2	
	25-31322- 1	M1		1	C-472
	25-31322- 5	M1		1	
	25-31322- 7	M1		2	
	25-31323- 3	M1		1	B-480
	25-31324- 5	M1		1	B-481
	25-31326- 1	M1		1	C-473
	25-31326- 5	M1		2	
	25-31326- 7	M1		1	
	25-31326-301	M1		1	
	25-31327- 3	M1	46 - 7	2	
			47 - 6		
R82MDA-	25-31328- 1		47 -130	1	C-474
	25-31328- 3	X1		1	
	25-31328- 3C	X1		1	
	25-31329- 3		48 - 9	12	A-266
	25-31329- 5	M1	48 - 8	8	
	25-31330- 5			1	F-115
	25-31330- 6	M1		1	
	25-31331- 1	M1		1	F-116
	25-31331- 5	M1		1	
	25-31331- 7	M1		1	
	25-31332- 1	M1		1	B-483
	25-31332- 3	M1		1	
	25-31333- 3	M1		1	C-475
	25-31334- 3	M1	45 - 56	1	B-484
	25-31335- 1	M1		1	F-117
	25-31335- 3	M1		1	
	25-31335- 5	M1		1	
	25-31335- 7	M1		1	
	25-31335-301	M1		1	
	25-31336- 1	M1		1	
	25-31336- 3	M1		1	
	25-31336- 5	M1		1	
	25-31336- 7	M1		1	
	25-31336- 9	M1		1	
	25-31336- 11	M1		1	
	25-31337- 3	M1		1	B-485
	25-31338- 1	M1		1	F-118
	25-31338- 3	M1		1	
	25-31338- 5			1	
	25-31339- 1	M1		1	B-486
	25-31339- 3	M1		1	
	25-31339- 5	M1		1	
	25-31340- 1			1	B-487
	25-31340- 3	M1		1	
	25-31340- 5	M1		1	
	25-31340- 7	M1		1	
	25-31342- 3			6	A-37
	25-31343- 1			1	C-477
	25-31343- 3	M1		1	
	25-31343- 5	M1		1	
	25-31344- 1	M1		1	C-478
	25-31344- 7	M1		1	
	25-31344- 9	M1		1	
	25-31344- 11	M1		1	
	25-31344-301	M1		1	
	25-31345- 1			1	F-120
	25-31345- 2	M1		1	
	25-31345- 3	M1		1	
	25-31345- 5			1	
	25-31345- 7	M1		1	
	25-31345- 9	M1		1	
	25-31345- 11	M1		1	
	25-31345- 12	M1		1	
	25-31345- 13			1	
	25-31345- 15			1	
	25-31345-301			1	
	25-31345-302			1	
	25-31346- 3	M1		1	A-267
	25-31346- 6	M1		1	
	25-31347- 3			1	
	25-31347- 4			1	
	25-31348- 1			1	B-488
	25-31348- 3	M1		1	
	25-31348- 5	M1		1	
	25-31349- 1	M1		1	F-121
	25-31349- 3	M1		1	
	25-31349- 5	M1		1	
	25-31349- 7	M1		1	
	25-31350- 1	M1	50 - 13	1	
	25-31350- 3	M1	50 - 21	1	
	25-31350- 5	M1	50 - 20	1	
	25-31351- 3	M1	46 -135	3	
			50 - 22		
	25-31353- 3	M1		1	B-489
	25-31354- 3	M1	46 - 24	21	A-38
			46 -		
			46 -		
			47 - 22		
			47 -		

STOCK	PART NUMBER	SOURCE CODE	FIGURE & INDEX NO.	QTY. PER A/C	MICROFILM INDEX
	25-31354- 3		47 -		
	25-31355- 3		46 - 27	11	A-268
			46 -		
			46 -		
			47 - 25		
			47 -		
			47 -		
	25-31356- 3		46 - 26	11	A-269
			46 -		
			46 -		
			47 - 24		
			47 -		
			47 -		
	25-31357- 1		47 - 28	1	B-490
	25-31357- 2		46 - 30	1	
	25-31357- 3			1	
	25-31357- 4			1	
R82MDA-	25-31358- 1		47 - 27	1	B-491
R82MDA-	25-31358- 2		46 - 29	1	
	25-31358- 3	M1		1	
	25-31358- 4	M1		1	
	25-31359- 1		47 - 18	1	B-492
	25-31359- 2	P	46 - 19	1	
	25-31359- 3	M1		1	
	25-31359- 4		46 - 28	1	
			47 -		
	25-31360- 1		50 - 2	1	F-122 C-479
	25-31360- 3			1	
	25-31361- 3		50 - 4	1	F-123 C-480
	25-31362- 1		50 - 25	2	F-124 F-125
	25-31362-1-3	X1		2	
	25-31362-1-3C	X1		2	
	25-31363- 1	M1		1	B-493
	25-31363- 3	M1		1	
	25-31363- 5	M1		1	
	25-31363- 9	M1		1	
	25-31363- 11	M1		2	
	25-31363- 13	M1		1	
R82MDA-	25-31364- 1		45 - 17	1	F-126 F-127
			50 -		
	25-31364- 3	X1		1	
	25-31364- 9	M1		1	
	25-31364- 15	M1		1	
	25-31364- 17	M1		1	
	25-31364- 19	M1		1	
	25-31364- 21	M1		1	
	25-31364- 23	M1		1	
	25-31364- 25	M1		1	
	25-31364- 27	M1		1	
	25-31364- 29	M1		1	
	25-31364- 31	M1		1	
	25-31364- 37	M1		1	
	25-31364- 39	M1		1	
	25-31364- 43	M1		1	
	25-31364- 47	M1		1	
	25-31364- 49	M1	50 - 24	1	
	25-31364- 51		50 - 11	1	
	25-31364- 53			1	
	25-31364- 55			1	
	25-31366- 1	M1		1	F-128
	25-31366- 3	M1		1	
	25-31366- 7	M1		1	
	25-31366- 11			1	
	25-31367- 1	M1		1	C-482
	25-31367- 3	M1		1	
	25-31368- 1	M1	47 - 99	1	F-129
	25-31368- 5	M1		1	
	25-31368- 7			1	
	25-31369- 3	M1	47 - 98	1	F-130
	25-31370- 3			1	
	25-31371- 1			1	
	25-31371- 3			1	
	25-31371- 5			1	
	25-31371- 7			1	
	25-31372- 1			2	XA-94
	25-31372- 3	M1		2	
	25-31372- 5	M1		2	
	25-31372- 7	M1		2	
	25-31372- 9	M1		2	
	25-31372- 11	M1		2	
	25-31372- 13	M1		2	
	25-31372- 15	M1		2	
	25-31372- 17	M1		2	
	25-31373- 1			1	
	25-31373-1-3			1	
	25-31373-1-3C			1	
	25-31374- 1	M1		1	
	25-31374- 3	M1		1	
	25-31374- 5	M1		1	
	25-31375- 1			1	
	25-31376- 1			1	
	25-31376-1-3			1	
	25-31376-1-3F			1	
	25-31377- 3			1	
	25-31378- 3F	X1		1	
	25-31379- 3F	X1		1	

STOCK	PART NUMBER	SOURCE CODE	FIGURE & INDEX NO.	QTY. PER A/C	MICROFILM INDEX
	25-31380- 1			1	
	25-31380- 3			1	
	25-31381- 1			1	
	25-31381-1-3			1	
	25-31381-1-3C			1	
	25-31382- 3			2	
	25-31383- 3		46 -141	1	
	25-31384- 1			1	
	25-31384- 3			1	
	25-31384- 5			1	
	25-31385- 1			1	
	25-31385- 3			1	
	25-31385- 5			1	
	25-31385- 7			1	
	25-31388- 1			1	
	25-31388- 3			1	
	25-31388- 5			1	
	25-31388- 7			1	
	25-31388- 9			1	
	25-31388- 11			1	
	25-31388- 13			1	
	25-31388- 15			1	
	25-31388- 17			1	
	25-31388- 21			1	
	25-31388- 23			1	
	25-31388- 25			1	
	25-31388- 27			1	
	25-31388- 29			1	
	25-31388- 31			1	
	25-31388- 33			1	
	25-31388- 35			1	
	25-31388- 37			1	
	25-31388- 39			1	
	25-31388- 41			3	
	25-31388- 43			1	
	25-31388- 45			1	
	25-31388- 47			1	
	25-31388- 49			1	
	25-31388- 51			1	
	25-31388- 53			1	
	25-31388- 55			1	
	25-31388- 57			1	
	25-31388- 59			1	
	25-31388- 61			1	
	25-31388- 63			1	
	25-31388- 65			1	
	25-31388- 67			1	
	25-31388- 69			1	
	25-31388- 70			1	
	25-31388- 71			1	
	25-31388- 72			1	
	25-31388- 73			1	
	25-31388- 74			1	
	25-31388- 75			1	
	25-31388- 76			1	
	25-31388- 77			1	
	25-31388- 78			1	
	25-31388- 79			1	
	25-31388- 80			1	
	25-31388- 81			1	
	25-31388- 83			1	
	25-31389- 1		47 -	1	
	25-31389- 5			1	
	25-31390- 5F	M1		1	
	25-31391- 1	M1		1	
	25-31391- 3	M1		1	
	25-31391- 5	M1		1	
	25-31392- 1	M1		1	
	25-31392- 3	M1		1	
	25-31392- 5	M1		1	
	25-31393- 3	M1	47 - 50	1	
	25-31394- 1	M1	47 - 51	1	
	25-31394- 3	M1	47 - 52	1	
	25-31394- 5	M1	47 - 53	1	
	25-31394- 7	M1		1	
	25-31394- 9	M1		1	
	25-31394- 11	M1	47 - 54	2	
	25-31394- 15	M1		2	
	25-31394- 17	M1		1	
	25-31394- 19		47 -	2	
	25-31394- 21	M1		1	
	25-31394- 23			1	
	25-31395- 3		47 -	1	
	25-31396- 3	M1		4	
	25-31397- 1			1	
	25-31397- 2			1	
	25-31397- 3			1	
	25-31397- 4			1	
	25-31397- 5			1	
	25-31397- 6			1	
	25-31397- 7			1	
	25-31397- 8			1	
	25-31397- 9			1	
	25-31397- 10			1	
	25-31397- 11			1	
	25-31397- 12			1	

STOCK	PART NUMBER	SOURCE CODE	FIGURE & INDEX NO.	QTY. PER A/C	MICROFILM INDEX
	25-31397- 13			1	
	25-31397- 14			1	
	25-31397- 19			8	
	25-31397- 21			6	
	25-31397- 23			2	
	25-31397- 24			2	
	25-31397- 25			2	
	25-31397- 26			2	
	25-31398- 3			1	
	25-31500- 3			1	
	25-31501- 3			1	
	25-31507- 3			1	
	25-31507- 4			1	
	25-32001- 1	X	106 -	1	C-483
	25-32001-301		106 -	1	
	25-32001-303			1	
	25-32001-307		106 -	1	
	25-32001-309			1	
	25-32002- 1		106 - 45	1	XA-187 XA-188 XA-189
			107 -		
	25-32002- 3			2	
	25-32002- 5	M1		1	
	25-32002- 7	M1		2	
	25-32002- 9	M1		2	
	25-32002- 13			1	
	25-32002- 15	M1		1	
	25-32002- 17			1	
	25-32002- 19	M1		1	
	25-32002- 21	M1		1	
	25-32002- 23	M1		1	
	25-32002- 25			1	
	25-32002- 27			1	
	25-32002- 29			1	
	25-32002- 30			1	
	25-32002- 31			1	
	25-32002- 32			1	
	25-32002-301		106 - 45	1	
			107 -		
	25-32002-303		106 - 45	1	
			107 -		
	25-32002-307			1	
	25-32002-309		106 - 45	1	
			107 -		
	25-32003- 1	X	107 - 32	1	XA-190 THRU XA-194
			108 -		
	25-32003- 3	M1		1	
	25-32003- 5	M1		1	
	25-32003- 7	M1		1	
	25-32003- 9	M1		1	
	25-32003- 13	M1		1	
	25-32003- 15	M1		2	
	25-32003- 19	M1		1	
	25-32003- 21	M1		1	
	25-32003- 23	M1		1	
	25-32003- 27	M1		1	
	25-32003- 29	M1		1	
	25-32003- 31	M1		1	
	25-32003- 33	M1		1	
	25-32003- 35	M1		1	
	25-32003- 37	M1		1	
	25-32003- 39			1	
	25-32003- 41	M1		1	
	25-32003- 43	M1		1	
	25-32003- 45	M1		1	
	25-32003- 51	M1		1	
	25-32003- 55	M1		1	
	25-32003- 63	M1		1	
	25-32003- 65			1	
	25-32003- 93			1	
	25-32003- 95			1	
	25-32003- 97	M1		1	
	25-32003- 99	M1		1	
	25-32003-101	M1		1	
	25-32003-103	M1		1	
	25-32003-105	M1		1	
	25-32003-107	M1		1	
	25-32003-109	M1		1	
	25-32003-111	M1		1	
	25-32003-113	M1		1	
	25-32003-115	M1		1	
	25-32003-119	M1		1	
	25-32003-121	M1		1	
	25-32003-123	M1		1	
	25-32003-127	M1		1	
	25-32003-129	M1		1	
	25-32003-131	M1		1	
	25-32003-133	M1		1	
	25-32003-135	M1		1	
	25-32003-137	M1		1	
	25-32003-139	M1		1	
	25-32003-141	M1		2	
	25-32003-143	M1		1	
	25-32003-145	M1		1	
	25-32003-153	M1		1	

STOCK	PART NUMBER	SOURCE CODE	FIGURE & INDEX NO.	QTY. PER A/C	MICROFILM INDEX
	25-32003-155	M1		1	
	25-32003-157	M1		1	
	25-32003-159	M1		1	
	25-32003-161	M1		1	
	25-32003-163	M1		1	
	25-32003-165	M1		1	
	25-32003-167	M1		1	
	25-32003-169	M1		1	
	25-32003-173	M1	108 - 89	1	
	25-32003-175	M1		1	
	25-32003-177	M1		1	
	25-32003-179	M1		1	
	25-32003-181			4	
	25-32003-183			3	
	25-32003-185			1	
	25-32003-187			1	
	25-32003-189			1	
	25-32003-301	X	107 - 32	1	
			108 -		
	25-32003-303		107 - 32	1	
			108 -		
	25-32003-305		107 - 32	1	
			108 -		
	25-32004- 1		107 - 33	1	XA-195 THRU XA-199
			109 -		
	25-32004- 3	M1		1	
	25-32004- 5	M1		1	
	25-32004- 7	M1		1	
	25-32004- 9			1	
	25-32004- 11	M1		1	
	25-32004- 15	M1		1	
	25-32004- 19	M1		2	
	25-32004- 21	M1		1	
	25-32004- 23	M1		1	
	25-32004- 27	M1		1	
	25-32004- 29	M1		1	
	25-32004- 31	M1		1	
	25-32004- 33	M1		1	
	25-32004- 35	M1		1	
	25-32004- 37	M1		1	
	25-32004- 39	M1		1	
	25-32004- 41	M1		1	
	25-32004- 43	M1		1	
	25-32004- 45	M1		1	
	25-32004- 51	M1		1	
	25-32004- 55	M1		1	
	25-32004- 63	M1		1	
	25-32004- 65	M1		1	
	25-32004- 93	M1		1	
	25-32004- 95	M1		1	
	25-32004- 99	M1		1	
	25-32004-101	M1		1	
	25-32004-103	M1		1	
	25-32004-105	M1		1	
	25-32004-107	M1		1	
	25-32004-109	M1		1	
	25-32004-111	M1		1	
	25-32004-113	M1		1	
	25-32004-115	M1		1	
	25-32004-119	M1		1	
	25-32004-121	M1		1	
	25-32004-123	M1		1	
	25-32004-125	M1		1	
	25-32004-127	M1		1	
	25-32004-129	M1		1	
	25-32004-131	M1		1	
	25-32004-133	M1		1	
	25-32004-135	M1		1	
	25-32004-137	M1		2	
	25-32004-139	M1		1	
	25-32004-141	M1		1	
	25-32004-143	M1		1	
	25-32004-147	M1		1	
	25-32004-149	M1		1	
	25-32004-151	M1		1	
	25-32004-153			1	
	25-32004-155	M1		1	
	25-32004-157	M1		1	
	25-32004-159	M1		1	
	25-32004-161	M1		1	
	25-32004-163	M1		1	
	25-32004-165	M1		1	
	25-32004-167	M1		1	
	25-32004-169	M1		1	
	25-32004-171	M1		1	
	25-32004-177	M1	109 - 67	1	
	25-32004-179	M1		1	
	25-32004-181			4	
	25-32004-183			1	
	25-32004-185			3	
	25-32004-187			1	
	25-32004-189			1	
	25-32004-191			1	
	25-32004-197			1	
	25-32004-301		107 - 33	1	

STOCK	PART NUMBER	SOURCE CODE	FIGURE & INDEX NO.	QTY. PER A/C	MICROFILM INDEX
	25-32004-301		109 -		
	25-32004-303		107 - 33	1	
			109 -		
	25-32004-305	X1	107 - 33	1	
			109 -		
	25-32006- 1		107 -	1	XA-200
	25-32006- 3	M1		1	
	25-32006- 5	M1		1	
	25-32006- 7	M1		1	
	25-32006- 9	M1		1	
	25-32006- 11	M1		1	
	25-32006- 13	M1		1	
	25-32006- 15	M1		1	
	25-32006- 17	M1		1	
	25-32006- 19			1	
	25-32006- 21	M1		1	
	25-32006- 22	M1		1	
	25-32006- 23	M1		1	
	25-32006- 24	M1		1	
	25-32006- 25	M1		2	
	25-32006- 27	M1		3	
	25-32006- 31	M1		1	
	25-32006- 33	M1		1	
	25-32006- 35	M1		1	
	25-32006- 37	M1		1	
	25-32006- 39			1	
	25-32006- 41			1	
	25-32006-305			1	
	25-32007- 1	P1	106 - 29	1	F-145 F-146
			114 -		
	25-32007- 3		114 - 5	1	
	25-32007- 5	M1		1	
	25-32007- 7	M1	114 - 7	1	
	25-32007- 9	M1	114 - 8	1	
	25-32007- 11	M1		1	
	25-32007- 12	M1		1	
	25-32007- 13	X1		1	
	25-32007- 15			1	
	25-32007- 16	M1		1	
	25-32007- 17	X1		1	
	25-32007- 18	X1		1	
	25-32007- 19	M1		1	
	25-32007- 21			1	
	25-32007- 23	M1		1	
	25-32007- 25	M1		1	
	25-32007- 27	M1		1	
	25-32007- 29	M1		1	
	25-32007- 30	M1		1	
	25-32007- 31	M1		1	
	25-32007- 33	M1		1	
	25-32007- 34	M1		1	
	25-32007- 35	M1		1	
	25-32007- 37	M1		1	
	25-32007- 38	M1		1	
	25-32007- 39			1	
	25-32007- 41	M1		1	
	25-32007- 42	M1		1	
	25-32007- 43	M1		1	
	25-32007- 45	M1	114 - 22	1	
	25-32007- 47	M1		2	
	25-32007- 48	M1		2	
	25-32007- 50	M1		2	
	25-32007- 51	M1		1	
	25-32007- 52	M1		1	
	25-32007- 53	M1		1	
	25-32007- 55	M1		1	
	25-32007- 56	M1		1	
	25-32007- 57	M1		2	
	25-32007- 58	M1		2	
	25-32007- 59	M1		1	
	25-32007- 60			1	
	25-32007- 61	M1		1	
	25-32007- 62	M1		1	
	25-32007- 63	M1		2	
	25-32007- 65	M1		4	
	25-32007- 66	M1		4	
	25-32007- 67	M1		1	
	25-32007- 69	M1		10	
	25-32007- 71	M1		1	
	25-32007- 73	M1		1	
	25-32007- 75	M1		1	
	25-32007- 77	M1		1	
	25-32007- 79	M1		1	
	25-32007- 81	M1		1	
	25-32007- 83	M1		1	
	25-32007- 85	M1	114 - 25	2	
	25-32007- 87	M1		1	
	25-32007- 89	M1		1	
	25-32007- 91	M1		1	
	25-32007- 93	M1		1	
	25-32007- 95	M1		1	
	25-32007- 97	M1		4	
	25-32007- 99	M1		2	
	25-32007-101	M1		1	
	25-32007-102	M1		1	
	25-32007-105	M1	114 - 29	1	

STOCK	PART NUMBER	SOURCE CODE	FIGURE & INDEX NO.	QTY. PER A/C	MICROFILM INDEX
	25-32007-107	M1		1	
	25-32007-108	M1		1	
	25-32007-109	M1		2	
	25-32007-111	M1		4	
	25-32007-113	M1		1	
	25-32007-114	M1		1	
	25-32007-115			1	
	25-32007-116			1	
R82MDA-	25-32007-301		106 - 29	1	
			114 -		
	25-32008- 1		106 - 33	1	F-147
			113 -		
	25-32008- 3	M1		1	
	25-32008- 5	M1		1	
	25-32008- 7	M1		1	
	25-32008- 9			1	
	25-32008- 11	M1		1	
	25-32008- 13	M1		1	
	25-32008- 15	M1		1	
	25-32008- 17	M1		1	
	25-32008- 18	M1		1	
	25-32008- 19	M1		1	
	25-32008- 21	M1		1	
	25-32008- 23	M1		1	
	25-32008- 25			4	
	25-32008- 27	M1		1	
	25-32008- 29	M1		2	
	25-32008- 31	M1	113 - 6	1	
	25-32008- 33	M1	113 - 5	1	
	25-32008- 35	M1		4	
	25-32008- 37	M1		2	
R82MDA-	25-32008-301		106 - 33	1	
			113 -		
	25-32009- 1		106 - 34	1	F-148 F-149 F-150
			114 -		
	25-32009- 3			1	
	25-32009- 5	M1		1	
	25-32009- 7	M1		1	
	25-32009- 9	M1		1	
	25-32009- 11	M1		1	
	25-32009- 13	M1		1	
	25-32009- 15			1	
	25-32009- 17	M1		1	
	25-32009- 19	M1		1	
	25-32009- 21			1	
	25-32009- 23	M1		1	
	25-32009- 25	M1		1	
	25-32009- 27	M1		1	
	25-32009- 29	M1		1	
	25-32009- 31	M1		1	
	25-32009- 33	M1		1	
	25-32009- 35	M1		1	
	25-32009- 37	M1		1	
	25-32009- 39	M1		1	
	25-32009- 41	M1		1	
	25-32009- 43	M1		1	
	25-32009- 45	M1		1	
	25-32009- 47	M1		1	
	25-32009- 49	M1		1	
	25-32009- 51	M1		1	
	25-32009- 53	M1		1	
	25-32009- 55	M1		1	
	25-32009- 57	M1		1	
	25-32009- 59	M1		1	
	25-32009- 61	M1		1	
	25-32009- 63	M1		2	
	25-32009- 65	M1		1	
	25-32009- 67	M1		1	
	25-32009- 69	M1		1	
	25-32009- 71	M1		1	
	25-32009- 73	M1		2	
	25-32009- 75	M1		14	
	25-32009- 77	M1		4	
	25-32009- 79	M1		2	
	25-32009- 81	M1		4	
	25-32009- 83	M1		1	
	25-32009- 85	M1		1	
	25-32009- 87	M1		8	
	25-32009- 89	M1		1	
	25-32009- 91	M1		1	
	25-32009- 93	M1		1	
	25-32009- 95	M1		8	
	25-32009- 97	M1		2	
	25-32009- 99	M1		2	
	25-32009-101	M1		3	
	25-32009-102	M1		4	
	25-32009-103	M1		1	
	25-32009-105	M1		2	
	25-32009-107	M1		2	
	25-32009-109	M1		1	
	25-32009-111	M1		1	
	25-32009-113	M1		1	
	25-32009-115	M1		1	
	25-32009-117	M1		1	
	25-32009-119	M1		1	

STOCK	PART NUMBER	SOURCE CODE	FIGURE & INDEX NO.	QTY. PER A/C	MICROFILM INDEX
R82MDA-	25-32009-301	P1	106 - 34 114 -	1	
	25-32009-603	M1		1	
	25-32010- 1		106 - 35	1	F-151 F-152
	25-32010- 3	M1		1	
	25-32010- 5	M1		1	
	25-32010- 6	M1		1	
	25-32010- 7			1	
	25-32010- 9	M1		1	
	25-32010- 11	M1		1	
	25-32010- 13	M1		1	
	25-32010- 15	M1		1	
	25-32010- 17	M1		1	
	25-32010- 19			1	
	25-32010- 21	M1		1	
	25-32010- 23	M1		1	
	25-32010- 24			1	
	25-32010- 25	M1		1	
	25-32010- 26	M1		1	
	25-32010- 27	M1		4	
	25-32010- 29	M1		1	
	25-32010- 30	M1		1	
	25-32010- 31	M1		1	
	25-32010- 32	M1		1	
	25-32010- 33	M1		4	
	25-32010- 35	M1		1	
	25-32010- 36	M1		1	
	25-32010- 37	M1		1	
	25-32010- 38	M1		1	
	25-32010- 39	M1		4	
	25-32010- 41	M1		1	
	25-32010- 42	M1		1	
	25-32010- 43	M1		1	
	25-32010- 45	M1		2	
	25-32010- 47	M1		10	
	25-32010- 49	M1		1	
	25-32010- 51	M1		1	
	25-32010- 53	M1		1	
	25-32010- 55	M1		1	
	25-32010- 57	M1		1	
	25-32010- 59	M1		1	
	25-32010- 61	M1		1	
	25-32010- 62	M1		1	
	25-32010- 63	M1	106 - 38	1	
	25-32010- 65	M1	106 - 39	1	
	25-32010- 67		106 - 40	1	
	25-32010- 69	M1		1	
	25-32010- 71	M1		1	
	25-32010- 73	M1		1	
	25-32010- 74	M1		1	
	25-32010- 75	M1		1	
	25-32010- 77	M1		1	
	25-32010- 79	M1		1	
	25-32010- 80	M1		1	
	25-32010- 81	M1		1	
	25-32010- 82	M1		1	
	25-32010- 83	M1		1	
	25-32010- 84	M1		1	
	25-32010- 85	M1		2	
R82MDA-	25-32010-301	P1	106 - 35	1	
	25-32011- 1		106 - 1 112 -	1	F-153 F-154
	25-32011- 3	M1	112 - 10	1	
	25-32011- 5	M1		1	
	25-32011- 7	M1		1	
	25-32011- 9			1	
	25-32011- 11	M1		1	
	25-32011- 13	M1		1	
	25-32011- 15			1	
	25-32011- 17			1	
	25-32011- 19	M1		1	
	25-32011- 21	M1		1	
	25-32011- 23	M1		1	
	25-32011- 25	M1		1	
	25-32011- 27	M1		1	
	25-32011- 29	M1		1	
	25-32011- 31	M1		1	
	25-32011- 33	M1		1	
	25-32011- 35	M1		1	
	25-32011- 37	M1		1	
	25-32011- 39	M1		1	
	25-32011- 41	M1		1	
	25-32011- 42	M1		1	
	25-32011- 43	M1		3	
	25-32011- 45	M1		1	
	25-32011- 46			1	
	25-32011- 47	M1		1	
	25-32011- 48	M1		1	
	25-32011- 49	M1		1	
	25-32011- 51	M1		1	
	25-32011- 53	M1		1	
	25-32011- 54	M1		1	
	25-32011- 55	M1		1	
	25-32011- 57	M1		1	
	25-32011- 59	M1		1	
	25-32011- 61	M1		1	
	25-32011- 62	M1		1	
	25-32011- 63	M1		1	
	25-32011- 64	M1		1	
	25-32011- 65	M1		1	
	25-32011- 66	M1		1	
	25-32011- 67	M1		1	
	25-32011- 69	M1		1	
	25-32011- 71	M1		1	
	25-32011- 73	M1		1	
	25-32011- 75	M1		1	
	25-32011- 76	M1		1	
	25-32011- 81			1	
	25-32011- 83	M1	112 - 14	1	
	25-32011- 85	M1	112 - 13	1	
	25-32011- 87	M1	112 - 8	1	
	25-32011- 89	M1	112 - 7	1	
	25-32011- 91	M1		1	
	25-32011- 93	M1		1	
	25-32011- 95	M1		1	
	25-32011-101	M1		1	
	25-32011-102	M1		1	
	25-32011-103	M	112 -	1	
	25-32011-104	M	112 -	1	
	25-32011-105	M1		1	
	25-32011-107		112 - 1	1	
	25-32011-109			1	
	25-32011-111			1	
	25-32011-113			1	
	25-32011-115			1	
	25-32011-301			1	
R82MDA-	25-32012- 1	P1	108 - 12 112 -	1	D-350
R82MDA-	25-32012- 2	P1	109 - 14 112 -	1	
	25-32012- 3	M1		1	
	25-32012- 4	M1		1	
	25-32012- 5	M1		1	
	25-32012- 6	M1		1	
	25-32012- 7	M1		1	
	25-32012- 8	M1		1	
	25-32012- 9	M1		1	
	25-32012- 10	M1		1	
	25-32012- 11	M1		1	
	25-32012- 12	M1		1	
	25-32012- 13	M1		1	
	25-32012- 14	M1		1	
	25-32012- 15	M1		1	
	25-32012- 16	M1		1	
	25-32012- 17	X1		2	
	25-32012- 18	X1		2	
	25-32012- 21	X1		1	
	25-32012- 22	X1		1	
	25-32012- 23	X1		1	
	25-32012- 24	X1		1	
	25-32012- 25	X1		1	
	25-32012- 26	X1		1	
	25-32012- 29	M1		2	
	25-32012- 30	M1		1	
	25-32012- 31	X1		2	
	25-32012- 32	X1		2	
	25-32012- 33	M1		1	
	25-32012- 34	M1		1	
	25-32012- 35	M1		1	
	25-32012- 36	M1		1	
	25-32012- 37	M1		8	
	25-32012- 39	M1	112 - 32	1	
	25-32012- 40	M1	112 - 32	1	
	25-32012- 43	M1		1	
	25-32012- 44	M1		1	
	25-32012- 45	M1		1	
	25-32012- 46	M1		1	
	25-32012- 47	M1		1	
	25-32012- 48	M1		1	
	25-32012- 49	M1		1	
	25-32012- 50	M1		1	
	25-32012- 51	M1		1	
	25-32012- 52	M1		1	
	25-32012- 53			2	
	25-32012- 55			2	
	25-32013- 1	P1	108 - 63 110 -	1	F-155
	25-32013- 2	P1	109 - 12 110 -	1	
	25-32013- 3	M1		1	
	25-32013- 4	M1		1	
	25-32013- 5	M1		1	
	25-32013- 6	M1		1	
	25-32013- 7	M1		1	
	25-32013- 8	M1		1	
	25-32013- 9	M1		1	
	25-32013- 10	M1		1	
	25-32013- 11	M1		1	
	25-32013- 12	M1		1	
	25-32013- 13	M1		1	
	25-32013- 14	M1		1	
	25-32013- 15	M1		1	

STOCK	PART NUMBER	SOURCE CODE	FIGURE & INDEX NO.	QTY. PER A/C	MICROFILM INDEX
	25-32013- 16	M1		1	
	25-32013- 17	M1		1	
	25-32013- 18	M1		1	
	25-32013- 19	M1		1	
	25-32013- 20	M1		1	
	25-32013- 21	M1		2	
	25-32013- 23	M1		1	
	25-32013- 24	M1		1	
	25-32013- 25	M1		1	
	25-32013- 26	M1		1	
	25-32013- 27	M1		1	
	25-32013- 28	M1		1	
	25-32013- 29	M1		2	
	25-32013- 31	M1		1	
	25-32013- 32	M1		1	
	25-32013- 33	M1		1	
	25-32013- 34	M1		1	
	25-32013- 35	M1		1	
	25-32013- 36	M1		1	
	25-32013- 37	M1		1	
	25-32013- 38	M1		1	
	25-32013- 39	M1		1	
	25-32013- 40	M1		1	
	25-32013- 41	M1		1	
	25-32013- 42	M1		1	
	25-32013- 43	M1		1	
	25-32013- 44	M1		1	
	25-32013- 45	M1		1	
	25-32013- 46	M1		1	
	25-32013- 47	M1		1	
	25-32013- 48	M1		1	
	25-32013- 49	M1		1	
	25-32013- 50	M1		1	
	25-32013- 51	M1		1	
	25-32013- 52	M1		1	
	25-32013- 53	M1		1	
	25-32013- 54	M1		1	
	25-32013- 55	M1	110 -	1	
	25-32013- 56	M1	110 - 9	1	
	25-32013- 57	M1		1	
	25-32013- 58	M1		1	
	25-32013- 59	M1		1	
	25-32013- 60	M1		1	
	25-32013- 61	M1		1	
	25-32013- 62	M1		1	
	25-32013- 63	M1		1	
	25-32013- 64	M1		1	
	25-32013- 65	M1		1	
	25-32013- 66	M1		1	
	25-32013- 67	M1		1	
	25-32013- 68	M1		1	
	25-32013- 69			1	
	25-32013- 70			1	
	25-32013- 71			1	
	25-32013- 72			1	
	25-32013- 73			1	
	25-32013- 74			1	
	25-32013- 75			1	
	25-32013- 76			1	
	25-32013- 77			1	
	25-32013- 78			1	
	25-32013- 79			1	
	25-32013- 80			1	
	25-32013- 81			1	
	25-32013- 82			1	
	25-32013- 83			1	
	25-32013- 84			1	
	25-32013- 85			1	
	25-32013- 86			1	
	25-32013- 87			1	
	25-32013- 88			1	
	25-32013- 89			1	
	25-32013- 90			1	
	25-32013-301		108 - 63 110 -	1	
	25-32013-302		109 - 12 110 -	1	
	25-32014- 1	P1	106 - 7 111 -	1	XA-201 XA-202
	25-32014- 2	P1	106 - 8 111 -	1	
	25-32014- 3	P1	106 - 9 111 -	1	
	25-32014- 4	P1	106 - 10 111 -	1	
R82MDA-	25-32014- 5	P1	106 - 13 111 -	1	
R82MDA-	25-32014- 6	P1	106 - 14 111 -	1	
R82MDA-	25-32014- 7	P1	106 - 16 111 -	1	
R82MDA-	25-32014- 8	P1	106 - 17 111 -	1	
	25-32014- 9	M1	106 - 15 111 -	1	
	25-32014- 10	M1	106 - 15	1	

STOCK	PART NUMBER	SOURCE CODE	FIGURE & INDEX NO.	QTY. PER A/C	MICROFILM INDEX
	25-32014- 10		111 -		
	25-32014- 13	M1		1	
	25-32014- 14	M1		1	
	25-32014- 15	M1		1	
	25-32014- 16	M1		1	
	25-32014- 17	M1	111 - 4	2	
	25-32014- 18	M1	111 - 4	2	
	25-32014- 19	M1		1	
	25-32014- 20	M1		1	
	25-32014- 21	M1		2	
	25-32014- 29	M1		1	
	25-32014- 30	M1		1	
	25-32014- 31	M1		1	
	25-32014- 32	M1		1	
	25-32014- 33	M1		1	
	25-32014- 34	M1		1	
	25-32014- 37	M1		1	
	25-32014- 38	M1		1	
	25-32014- 39	M1		1	
	25-32014- 40	M1		1	
	25-32014- 41	M1		1	
	25-32014- 42	M1		1	
	25-32014- 43	M1		1	
	25-32014- 44	M1		1	
	25-32014- 47	M1		1	
	25-32014- 48	M1		1	
	25-32014- 49	M1		1	
	25-32014- 50	M1		1	
	25-32014- 51	M1		1	
	25-32014- 52	M1		1	
	25-32014- 53	M1		1	
	25-32014- 54	M1		1	
	25-32014- 55	M1	111 - 24	1	
	25-32014- 56	M1	111 - 24	1	
	25-32014- 57	M1		1	
	25-32014- 58	M1		1	
	25-32014- 59	M1	111 - 25 111 - 26	2	
	25-32014- 60	M1	111 - 25 111 - 26	2	
	25-32014- 65	M1		2	
	25-32014- 79	M1		1	
	25-32014- 80	M1		1	
	25-32014- 81	M1	111 - 13	1	
	25-32014- 82	M1	111 - 13	1	
	25-32014- 83	M1		1	
	25-32014- 84	M1		1	
	25-32014- 89	M1		1	
	25-32014- 90	M1		1	
	25-32014- 91	M1	111 - 19	1	
	25-32014- 92	M1	111 - 19	1	
	25-32014- 93	M1	106 - 12 111 -	1	
	25-32014- 94	M1	106 - 12 111 -	1	
	25-32014- 97	M1		2	
	25-32014- 99			1	
	25-32014-100			1	
	25-32014-101			2	
	25-32014-103			1	
	25-32014-104			1	
	25-32014-301		106 - 9 111 -	1	
	25-32014-302		106 - 10 111 -	1	
	25-32018- 3	X1		2	XA-203
	25-32018- 4	X1		2	
	25-32018- 5	X1		1	
	25-32018- 6	X1		1	
	25-32018- 7	X1		1	
	25-32018- 8	X1		1	
	25-32018- 9	X1		2	
	25-32018- 11	X1		2	
	25-32018- 13	X1	108 -	1	
	25-32018- 14		109 -	1	
	25-32018- 15		108 - 35	1	
	25-32018- 16		109 - 35	1	
	25-32018- 17	M1		1	
	25-32018- 18	M1		1	
	25-32022- 1		108 -	1	XA-204
	25-32022- 2	M1	109 -	1	
	25-32022- 3	A	108 -	1	
	25-32022- 4	M1	109 -	1	
	25-32022- 5	M1	108 - 39	1	
	25-32022- 6	M1	109 - 50	1	
	25-32022- 7	M1	108 - 32	1	
	25-32022- 8	M1	109 - 32	1	
	25-32022- 9	M1		1	
	25-32022- 10	M1		1	
	25-32022- 11	M1		1	
	25-32022- 13	M1		1	
	25-32022- 15	M1		1	
	25-32022- 16	M1		1	
	25-32022- 17	M1		1	
	25-32022- 18	M1		1	
	25-32023- 1	M1	108 -	1	XA-205

STOCK	PART NUMBER	SOURCE CODE	FIGURE & INDEX NO.	QTY. PER A/C	MICROFILM INDEX
	25-32023- 3	M1	109 -	1	
	25-32023- 5	M1	108 -	1	
	25-32023- 6	A	109 -	1	
	25-32023- 7	M1	108 - 23	1	
	25-32023- 9	M1	109 - 15	1	
	25-32023- 11	M1	108 - 27	1	
	25-32023- 12	M1	109 - 27	1	
	25-32023- 13	M1	109 - 18	1	
	25-32023- 15	M1		1	
	25-32023- 16	M1		1	
	25-32023- 17	M1		1	
	25-32023- 18	M1		1	
	25-32023- 19	M1		1	
	25-32023- 21	M1		1	
	25-32023- 23			1	
	25-32023- 25			1	
	25-32023- 27		109 - 20	1	
	25-32023- 29			1	
	25-32023- 33			1	
	25-32023- 35		109 - 21	1	
	25-32026- 1	M1	106 - 2	1	F-165
	25-32026- 3	M1		1	
	25-32026- 5			1	
	25-32026-301			1	
	25-32027- 1	M1	108 - 52	1	C-484
	25-32027- 3	M1		1	
	25-32027- 5	M1	108 - 55	1	
	25-32027- 7	M1	108 - 54	1	
	25-32027- 9	M1		1	
	25-32027- 11	M1		2	
R82MDA-	25-32028- 1	P1	106 - 30	1	F-166
			113 -		
	25-32028- 3	M1	113 - 8	1	
	25-32028- 5	M1		1	
	25-32028- 7	M1		1	
	25-32028- 13	M1		1	
	25-32028- 15	M1	113 - 11	1	
	25-32028- 17	M1	113 - 12	1	
	25-32028- 19	M1		1	
	25-32028- 21	M1		1	
	25-32028- 23	M1		1	
	25-32028- 25	M1		1	
	25-32028- 27	M1		1	
	25-32028- 29	M1		1	
	25-32028- 31	M1		1	
	25-32028- 33	M1		1	
	25-32028- 34	M1		1	
	25-32028- 35	M1		1	
	25-32028- 37	M1		1	
	25-32028- 39	M1		4	
	25-32028- 41	M1	113 - 7	1	
	25-32028- 43	M1		1	
	25-32028- 45	M1		1	
	25-32028- 47	M1		1	
	25-32028- 49	M1		1	
	25-32028- 51	M1		1	
	25-32028- 53	M1		1	
	25-32028- 55	M1		1	
	25-32028- 57	M1		2	
	25-32028- 61	M1		2	
	25-32028- 63	M1		1	
	25-32028- 65	M1		1	
	25-32028- 67	M1		1	
	25-32028- 71	M1		1	
	25-32028- 73	M1		1	
	25-32028- 75	M1		1	
	25-32028- 77	M1		1	
	25-32028- 79	M1		1	
	25-32028- 81	M1		1	
	25-32028-301	P1	106 -	1	
			113 -		
	25-32029- 1	M1	108 -	2	F-170
	25-32029- 2	M1	109 -	2	
	25-32029- 3	M1	108 - 58	3	
	25-32029- 4	M1	109 - 52	3	
	25-32029- 5	M1		8	
	25-32029- 7	M1		8	
	25-32029- 9	M1		4	
	25-32029- 11	M1		4	
	25-32030- 1	M1		1	F-167 F-168
	25-32030- 2	M1		1	
	25-32030- 3	M1		1	
	25-32030- 4	M1		1	
	25-32030- 5	M1		1	
	25-32030- 6	M1		1	
	25-32030- 7	M1		1	
	25-32030- 8	M1		1	
	25-32030- 9	M1		2	
	25-32030- 10	M1		2	
	25-32030- 11	M1		1	
	25-32030- 12	M1		1	
	25-32030- 13	M1		1	
	25-32030- 14	M1		1	
	25-32030- 15	M1		1	
	25-32030- 16	M1		1	
	25-32030- 17	M1		1	

STOCK	PART NUMBER	SOURCE CODE	FIGURE & INDEX NO.	QTY. PER A/C	MICROFILM INDEX
	25-32030- 18	M1		1	
	25-32030- 19	M1		1	
	25-32030- 20	M1		1	
	25-32030- 21	M1		1	
	25-32030- 22	M1		1	
	25-32030- 23	M1		1	
	25-32030- 24	M1		1	
	25-32030- 25	M1		1	
	25-32030- 26	M1		1	
	25-32030- 27	M1		1	
	25-32030- 28	M1		1	
	25-32030- 29	M1		1	
	25-32030- 30	M1		1	
	25-32030- 31	M1		1	
	25-32030- 32	M1		1	
	25-32030- 33	M1		1	
	25-32030- 34	M1		1	
	25-32030- 35	M1		1	
	25-32030- 36	M1		1	
	25-32030- 37	M1		1	
	25-32030- 38	M1		1	
	25-32030- 39	M1		1	
	25-32030- 40	M1		1	
	25-32030- 41	M1		1	
	25-32030- 42	M1		1	
	25-32030- 43	M1		1	
	25-32030- 44	M1		1	
	25-32030- 45	M1		1	
	25-32030- 46			1	
	25-32030- 47	M1		1	
	25-32030- 48	M1		1	
	25-32030- 49	M1		1	
	25-32030- 50	M1		1	
	25-32030- 51	M1		1	
	25-32030- 52	M1		1	
	25-32030- 53	M1		1	
	25-32030- 54	M1		1	
	25-32030- 55			1	
	25-32030- 56			1	
	25-32030- 57			1	
	25-32030- 58			1	
	25-32030-301			1	
	25-32030-302			1	
	25-32031- 1	M1	108 -	1	F-169
	25-32031- 2	M1	109 -	1	
	25-32031- 7	M1	108 - 84	1	
	25-32031- 8	M1	109 - 65	1	
	25-32033- 1			1	
	25-32033- 3			1	
	25-32033- 5			1	
	25-32033- 7			1	
	25-32033- 9			1	
	25-32033- 11			1	
	25-32033- 13			1	
	25-32033- 15			1	
	25-32033- 17			1	
	25-32033- 19			1	
	25-32033- 21			1	
	25-32033- 23			1	
	25-32033- 25			1	
	25-32033- 27			1	
	25-32033- 29			1	
	25-32033- 31			1	
	25-32033- 33			1	
	25-32033- 35			1	
	25-32033- 37			1	
	25-32033- 39			1	
	25-32033- 41			1	
	25-32033- 43			1	
	25-32033- 45			1	
	25-32033- 47			4	
	25-32033- 49			1	
	25-32033- 51			1	
	25-32033- 53			1	
	25-32033- 55			1	
	25-32033- 57			1	
	25-32033- 59			1	
	25-32033- 61			1	
	25-32033- 63			1	
	25-32033- 65			1	
	25-32033- 67			1	
	25-32033- 69			1	
	25-32033- 71			1	
	25-32033- 73			1	
	25-32033- 75			1	
	25-32033- 77			1	
	25-32033- 79			2	
	25-32033- 81			1	
	25-32033- 83			1	
	25-32033- 85			1	
	25-32033- 87			1	
	25-32033- 89			1	
	25-32033- 91			1	
	25-32033- 93			1	
	25-32033- 95			1	
	25-32033- 97			1	

STOCK	PART NUMBER	SOURCE CODE	FIGURE & INDEX NO.	QTY. PER A/C	MICROFILM INDEX
	25-32033- 99			1	
	25-32033-101			1	
	25-32033-103			1	
	25-32033-105			1	
	25-32033-107			1	
	25-32033-109			1	
	25-32033-111			1	
	25-32033-113			1	
	25-32033-115			1	
	25-32033-117			1	
	25-32033-119			1	
	25-32033-121			1	
	25-32033-123			1	
	25-32033-125			1	
	25-32033-127			1	
	25-32033-129			1	
	25-32033-131			1	
	25-32033-133			1	
	25-32033-135			1	
	25-32033-301			1	
	25-32034- 1			1	
	25-32034- 3			1	
	25-32034- 5			1	
	25-32034- 7			1	
	25-32034- 9			1	
	25-32034- 11			1	
	25-32034- 13			1	
	25-32034- 15			1	
	25-32034- 17			1	
	25-32034- 19			1	
	25-32034- 21			1	
	25-32034- 23			1	
	25-32034- 25			1	
	25-32034- 27			1	
	25-32034- 29			1	
	25-32034- 31			1	
	25-32034- 33			1	
	25-32034- 35			1	
	25-32034- 37			1	
	25-32034- 39			1	
	25-32034- 41			1	
	25-32034- 43			1	
	25-32034- 45			1	
	25-32034- 47			1	
	25-32034- 49			1	
	25-32034- 51			1	
	25-32034- 53			1	
	25-32034- 55			1	
	25-32034- 57			1	
	25-32034- 59			1	
	25-32034- 61			1	
	25-32034- 63			1	
	25-32034- 65			2	
	25-32034- 67			1	
	25-32034- 69			1	
	25-32034- 71			1	
	25-32034- 73			1	
	25-32034- 75			1	
	25-32034- 77			1	
	25-32034- 79			1	
	25-32034- 81			1	
	25-32034- 83			1	
	25-32034- 85			1	
	25-32034- 87			1	
	25-32034- 89			1	
	25-32034- 91			1	
	25-32034- 93			1	
	25-32034- 95			1	
	25-32034- 97			1	
	25-32034- 99			1	
	25-32034-101			1	
	25-32034-103			1	
	25-32034-105			1	
	25-32034-107			1	
	25-32034-109			1	
	25-32034-111			1	
	25-32034-113			1	
	25-32034-115			1	
	25-32034-117			1	
	25-32034-119			1	
	25-32034-121			1	
	25-32034-123			2	
	25-32034-125			1	
	25-32034-127			4	
	25-32034-129			1	
	25-32034-131			1	
	25-32034-133			1	
	25-32034-135			1	
	25-32034-137			1	
	25-32034-139			1	
	25-32034-141			1	
	25-32034-301			1	
	25-32050- 3			1	
	25-32050- 4			2	
	25-32051- 1	X2	108 -	1	F-171 F-172 F-173 D-991

STOCK	PART NUMBER	SOURCE CODE	FIGURE & INDEX NO.	QTY. PER A/C	MICROFILM INDEX
	25-32051- 3	X2	109 -	1	
	25-32051- 5	M1		1	
	25-32051- 7	X1		1	
	25-32051- 9	X1		1	
	25-32051- 11	X1		1	
	25-32051- 13	X1		1	
	25-32051- 15	X1		1	
	25-32051- 17	M1		1	
	25-32051- 18	M1		1	
	25-32051- 19	M1		1	
	25-32051- 20	M1		1	
	25-32051- 21	M1		1	
	25-32051- 23	M1		1	
	25-32051- 25	M1		1	
	25-32051- 27	M1		1	
	25-32051- 29	M1		1	
	25-32051- 31	M1		1	
	25-32051- 33	M1		1	
	25-32051- 35	M1		1	
	25-32051- 37	M1		1	
	25-32051- 39	M1		1	
	25-32051- 40	M1		1	
	25-32051- 41	M1		1	
	25-32051- 42	M1		1	
	25-32051- 43	M1		1	
	25-32051- 44	M1		1	
	25-32051- 45	M1		1	
	25-32051- 46	M1		1	
	25-32051- 47	M1		1	
	25-32051- 48	M1		1	
	25-32051- 49	M1		2	
	25-32051- 51	M1		2	
	25-32051- 53	M1		1	
	25-32051- 54	M1		1	
	25-32051- 55	M1		1	
	25-32051- 56	M1		1	
	25-32051- 57	M1		1	
	25-32051- 58	M1		1	
	25-32051- 63	M1		1	
	25-32051- 65	M1		1	
	25-32051- 67	M1		1	
	25-32051- 68	M1		1	
	25-32051- 69	M1		1	
	25-32051- 71	M1		1	
	25-32051- 73	M1		1	
	25-32051- 74	M1		1	
	25-32051- 75	M1		1	
	25-32051- 76	M1		1	
	25-32051- 77	M1		1	
	25-32051- 78	M1		1	
	25-32051- 79	M1		1	
	25-32051- 80	M1		1	
	25-32051- 83	M1		1	
	25-32051- 84	M1		1	
	25-32051- 85	M1		1	
	25-32051- 87	M1		1	
	25-32051- 89	M1		2	
	25-32051- 91	M1		1	
	25-32051- 95	M1		1	
	25-32051- 97	M1		2	
	25-32051- 99	M1		1	
	25-32051-101	M1		1	
	25-32051-102	M1		1	
	25-32051-103	M1		1	
	25-32051-104	M1		1	
	25-32051-105	M1		1	
	25-32051-106	M1		1	
	25-32051-107	M1		1	
	25-32051-108	M1		1	
	25-32051-109	M1		1	
	25-32051-111	M1		1	
	25-32051-113	M1		1	
	25-32051-114	M1		1	
	25-32051-115	M1		1	
	25-32051-116	M1		1	
	25-32051-117	M1		1	
	25-32051-118	M1		1	
	25-32051-120	M1		1	
	25-32051-121	M1		1	
	25-32051-125	M1		1	
	25-32051-127	M1		1	
	25-32051-129	M1		1	
	25-32051-131	M1		1	
	25-32051-132	M1		1	
	25-32051-133	M1		1	
	25-32051-134	M1		1	
	25-32051-135	M1		1	
	25-32051-136	M1		1	
	25-32051-139	M1		1	
	25-32051-140	M1		1	
	25-32051-141	M1		1	
	25-32051-142	M1		1	
	25-32051-143	M1		1	
	25-32051-144	M1		1	
	25-32051-145	M1		1	
	25-32051-147	M1		1	

STOCK	PART NUMBER	SOURCE CODE	FIGURE & INDEX NO.	QTY. PER A/C	MICROFILM INDEX
	25-32051-149	M1		1	
	25-32051-151	M1		1	
	25-32051-153	M1		1	
	25-32051-155	M1		2	
	25-32051-157	M1		2	
	25-32051-161	M1		1	
	25-32051-163	M1		1	
	25-32051-164	M1		1	
	25-32051-165	M1		1	
	25-32051-167	M1		2	
	25-32051-169	M1		2	
	25-32051-171	M1		1	
	25-32051-173	M1		1	
	25-32051-175	M1		1	
	25-32051-177	M1		1	
	25-32051-179	M1		1	
	25-32051-181	M1		1	
	25-32051-183	M1		1	
	25-32051-185	M1		1	
	25-32051-187	M1		1	
	25-32051-189	M1		1	
	25-32051-191	M1		1	
	25-32051-193	M1		1	
	25-32051-195			2	
	25-32051-197			2	
	25-32051-199			1	
	25-32051-201			1	
	25-32051-237			1	
	25-32051-301	X2	108 -	1	
	25-32051-303	X2	109 -	1	
	25-32052- 3F	X1		3	F-174
	25-32053- 1	X2	108 - 7	1	F-175
	25-32053- 2	X2	109 - 7	1	
	25-32053- 3	M1		1	
	25-32053- 4	M1		1	
	25-32053- 5	M1		1	
	25-32053- 6	M1		1	
	25-32053- 7	M1		1	
	25-32053- 8	M1		1	
	25-32053- 9	M1		1	
	25-32053- 11	M1		2	
	25-32053- 13	M1		2	
	25-32053- 15	M1		2	
	25-32053- 17	M1		1	
	25-32053- 18	M1		1	
	25-32053- 19	M1		1	
	25-32053- 20	M1		1	
	25-32053- 21	M1		1	
	25-32053- 22	M1		1	
	25-32053- 23	M1		1	
	25-32053- 24	M1		1	
	25-32053- 25	M1		1	
	25-32053- 26	M1		1	
	25-32053- 27	M1		1	
	25-32053- 28	M1		1	
	25-32053- 29	M1		1	
	25-32053- 30	M1		1	
	25-32053- 31	M1		1	
	25-32053- 32	M1		1	
	25-32053- 41	M1		2	
	25-32053- 42	M1		2	
	25-32053- 43	M1		1	
	25-32053- 44	M1		1	
	25-32053- 47	M1		4	
	25-32053- 49	M1		2	
	25-32053- 51	M1		4	
	25-32053- 55	M1		2	
	25-32053- 57	M1		2	
	25-32053- 59	M1		1	
	25-32053- 60	M1		1	
	25-32053- 61	M1		1	
	25-32053- 62	M1		1	
	25-32053- 63	M1		1	
	25-32053- 64	M1		1	
	25-32053- 65	M1		1	
	25-32053- 66	M1		1	
	25-32053- 67	M1		1	
	25-32053- 68	M1		1	
	25-32053- 69	M1		1	
	25-32053- 70	M1		1	
	25-32053- 71	M1		1	
	25-32053- 72	M1		1	
	25-32053- 73	M1		1	
	25-32053- 74	M1		1	
	25-32053- 75	M1		1	
	25-32053- 76	M1		1	
	25-32053- 77	M1		1	
	25-32053- 78	M1		1	
	25-32053- 79	M1		1	
	25-32053- 80	M1		1	
	25-32053- 81	M1		1	
	25-32053- 82	M1		1	
	25-32053- 83	M1		1	
	25-32053- 87	M1		1	
	25-32053- 88	M1		1	
	25-32053- 89	M1		1	

STOCK	PART NUMBER	SOURCE CODE	FIGURE & INDEX NO.	QTY. PER A/C	MICROFILM INDEX
	25-32053- 90	M1		1	
	25-32053- 91	M1		2	
	25-32053- 93	M1		2	
	25-32053- 95	M1		2	
	25-32053- 97	M1		1	
	25-32053- 99	M1		1	
	25-32053-101	M1		2	
	25-32053-109	M1		1	
	25-32053-111	M1		1	
	25-32053-113	M1		1	
	25-32053-119			2	
	25-32053-121			1	
	25-32053-122			1	
	25-32053-302	X2	109 - 7	1	
	25-32054- 1	X2	108 - 9	1	F-176
	25-32054- 2	X2	109 - 9	1	
	25-32054- 3	M1		1	
	25-32054- 4	M1		1	
	25-32054- 5	M1		1	
	25-32054- 6	M1		1	
	25-32054- 7	M1		1	
	25-32054- 8	M1		1	
	25-32054- 9	M1		1	
	25-32054- 10	M1		1	
	25-32054- 11	M1		1	
	25-32054- 13	M1		1	
	25-32054- 14	M1		1	
	25-32054- 15	M1		2	
	25-32054- 19	M1		2	
	25-32054- 21	M1		1	
	25-32054- 22	M1		1	
	25-32054- 23	M1		1	
	25-32054- 24	M1		1	
	25-32054- 25	M1		1	
	25-32054- 26	M1		1	
	25-32054- 27	M1		1	
	25-32054- 28	M1		1	
	25-32054- 29	M1		1	
	25-32054- 30	M1		1	
	25-32054- 31	M1		1	
	25-32054- 32	M1		1	
	25-32054- 33	M1		1	
	25-32054- 34	M1		1	
	25-32054- 37	M1		1	
	25-32054- 38	M1		1	
	25-32054- 39	M1		1	
	25-32054- 40	M1		1	
	25-32054- 41	M1		1	
	25-32054- 42	M1		1	
	25-32054- 43	M1		1	
	25-32054- 44	M1		1	
	25-32054- 45	M1		1	
	25-32054- 46	M1		1	
	25-32054- 47	M1		1	
	25-32054- 48	M1		1	
	25-32054- 49	M1		1	
	25-32054- 50	M1		1	
	25-32054- 51	M1		1	
	25-32054- 52	M1		1	
	25-32054- 53	M1		1	
	25-32054- 55	M1		2	
	25-32054- 57	M1		2	
	25-32054- 59	M1		1	
	25-32054- 60	M1		1	
	25-32054- 69	M1		1	
	25-32054- 71	M1		1	
	25-32054- 73	M1		2	
	25-32054- 75	M1		1	
	25-32054- 76	M1		1	
	25-32054- 77	M1		1	
	25-32054- 78	M1		1	
	25-32054- 79	M1		1	
	25-32054- 80	M1		1	
	25-32054- 81	M1		1	
	25-32054- 82	M1		1	
	25-32054- 83	M1		1	
	25-32054- 85	M1		1	
	25-32054- 87	M1		1	
	25-32054- 89			1	
	25-32054- 90			1	
	25-32054- 91			2	
	25-32054-302	X2	109 - 9	1	
	25-32055- 1	X2	108 - 10	1	F-177
	25-32055- 2	X2	109 - 10	1	
	25-32055- 5	M1		1	
	25-32055- 6	M1		1	
	25-32055- 7	M1		1	
	25-32055- 8	M1		1	
	25-32055- 11	M1		1	
	25-32055- 13	M1		2	
	25-32055- 14	M1		2	
	25-32055- 15	M1		2	
	25-32055- 19	M1		2	
	25-32055- 21	M1		1	
	25-32055- 22	M1		1	
	25-32055- 23	M1		1	

STOCK	PART NUMBER	SOURCE CODE	FIGURE & INDEX NO.	QTY. PER A/C	MICROFILM INDEX
	25-32055- 24	M1		1	
	25-32055- 25	M1		2	
	25-32055- 27	M1		2	
	25-32055- 33	M1		2	
	25-32055- 35	M1		1	
	25-32055- 36	M1		1	
	25-32055- 37	M1		1	
	25-32055- 38	M1		1	
	25-32055- 41	M1		1	
	25-32055- 42	M1		1	
	25-32055- 43	M1		1	
	25-32055- 44	M1		1	
	25-32055- 45	M1		1	
	25-32055- 46	M1		1	
	25-32055- 47	M1		1	
	25-32055- 49	M1		1	
	25-32055- 50	M1		1	
	25-32055- 51	M1		2	
	25-32055- 53	M1		2	
	25-32055- 57	M1		1	
	25-32055- 58	M1		1	
	25-32055- 59	M1		1	
	25-32055- 60	M1		1	
	25-32055- 69	M1		2	
	25-32055- 71	M1		2	
	25-32055- 73	M1		1	
	25-32055- 74	M1		1	
	25-32055- 75	M1		1	
	25-32055- 76	M1		1	
	25-32055- 77	M1		1	
	25-32055- 78	M1		1	
	25-32055- 79	M1		1	
	25-32055- 80	M1		1	
	25-32055- 81	M1		1	
	25-32055- 82	M1		1	
	25-32055- 83	M1		1	
	25-32055- 85	M1		2	
	25-32055- 87	M1		1	
	25-32055- 88	M1		1	
	25-32055- 89	M1		2	
	25-32055- 91			3	
	25-32055-301	X2	108 - 10	1	
	25-32055-302	X2	109 - 10	1	
	25-32056- 1	X2	108 - 11	1	F-178
	25-32056- 2	X2	109 - 11	1	
	25-32056- 5	M1		1	
	25-32056- 6	M1		1	
	25-32056- 7	M1		1	
	25-32056- 8	M1		1	
	25-32056- 9	M1		1	
	25-32056- 11	M1		1	
	25-32056- 12	M1		1	
	25-32056- 13	M1		2	
	25-32056- 14	M1		2	
	25-32056- 15	M1		2	
	25-32056- 17	M1		1	
	25-32056- 18	M1		1	
	25-32056- 19	M1		1	
	25-32056- 20	M1		1	
	25-32056- 21	M1		2	
	25-32056- 23	M1		2	
	25-32056- 25	M1		2	
	25-32056- 27	M1		2	
	25-32056- 31	M1		1	
	25-32056- 32	M1		1	
	25-32056- 33	M1		1	
	25-32056- 34	M1		1	
	25-32056- 35	M1		1	
	25-32056- 36	M1		1	
	25-32056- 39	M1		1	
	25-32056- 40	M1		1	
	25-32056- 41			1	
	25-32056- 42	M1		1	
	25-32056- 43	M1		1	
	25-32056- 44	M1		1	
	25-32056- 45	M1		1	
	25-32056- 57	M1		2	
	25-32056- 59	M1		2	
	25-32056- 61	M1		1	
	25-32056- 62	M1		1	
	25-32056- 63	M1		1	
	25-32056- 64	M1		1	
	25-32056- 65	M1		2	
	25-32056- 67	M1		1	
	25-32056- 68	M1		1	
	25-32056- 69	M1		1	
	25-32056- 70	M1		1	
	25-32056- 71	M1		1	
	25-32056- 72	M1		1	
	25-32056- 73	M1		1	
	25-32056- 74	M1		1	
	25-32056- 75	M1		1	
	25-32056- 76	M1		1	
	25-32056- 77	M1		1	
	25-32056- 78	M1		1	
	25-32056- 79	M1		2	

STOCK	PART NUMBER	SOURCE CODE	FIGURE & INDEX NO.	QTY. PER A/C	MICROFILM INDEX
	25-32056- 81	M1		1	
	25-32056-301	X2	108 - 11	1	
	25-32056-302	X2	109 - 11	1	
	25-32057- 1	X2	108 -	1	F-179 THRU F-182
	25-32057- 2	X2	109 -	1	
	25-32057- 3	M1		1	
	25-32057- 5	M1		1	
	25-32057- 9	M1		1	
	25-32057- 10	M1		1	
	25-32057- 11	M1		1	
	25-32057- 13	M1		1	
	25-32057- 17	M1		1	
	25-32057- 21	M1		1	
	25-32057- 22	M1		1	
	25-32057- 23	M1		1	
	25-32057- 25	M1		1	
	25-32057- 27	M1		1	
	25-32057- 29	M1		1	
	25-32057- 31	M1		1	
	25-32057- 32	M1		1	
	25-32057- 33	M1		1	
	25-32057- 34	M1		1	
	25-32057- 35	M1		1	
	25-32057- 36	M1		1	
	25-32057- 37	M1		1	
	25-32057- 38	M1		1	
	25-32057- 39	M1		1	
	25-32057- 40	M1		1	
	25-32057- 41	M1		1	
	25-32057- 42	M1		1	
	25-32057- 43	M1		1	
	25-32057- 45	M1		1	
	25-32057- 46	M1		1	
	25-32057- 47	M1		1	
	25-32057- 49	M1		1	
	25-32057- 51	M1		1	
	25-32057- 59	M1		1	
	25-32057- 60	M1		1	
	25-32057- 61	M1		2	
	25-32057- 62	M1		2	
	25-32057- 63	M1		1	
	25-32057- 64	M1		1	
	25-32057- 65	M1		1	
	25-32057- 67	M1		1	
	25-32057- 68	M1		1	
	25-32057- 69	M1		1	
	25-32057- 70	M1		1	
	25-32057- 71	M1		1	
	25-32057- 72	M1		1	
	25-32057- 73	M1		1	
	25-32057- 75	M1		2	
	25-32057- 77	M1		2	
	25-32057- 79	M1		2	
	25-32057- 81	M1		1	
	25-32057- 83	M1		1	
	25-32057- 84	M1		1	
	25-32057- 87	M1		1	
	25-32057- 88	M1		1	
	25-32057- 89	M1		1	
	25-32057- 90	M1		1	
	25-32057- 91	M1		2	
	25-32057- 93	M1		1	
	25-32057- 94	M1		1	
	25-32057- 95	M1		1	
	25-32057- 96	M1		1	
	25-32057- 99	M1		2	
	25-32057-107	M1		1	
	25-32057-111	M1		1	
	25-32057-115	M1		2	
	25-32057-117	M1		2	
	25-32057-119	M1		1	
	25-32057-120	M1		1	
	25-32057-123	M1		1	
	25-32057-124	M1		1	
	25-32057-125	M1		2	
	25-32057-133	M1		1	
	25-32057-135	M1		1	
	25-32057-139	M1		1	
	25-32057-141	M1		1	
	25-32057-142	M1		1	
	25-32057-143	M1		1	
	25-32057-145	M1		1	
	25-32057-147	M1		1	
	25-32057-148	M1		1	
	25-32057-149	M1		3	
	25-32057-151	M1		1	
	25-32057-153	M1		1	
	25-32057-154	M1		1	
	25-32057-155	M1		2	
	25-32057-157	M1		2	
	25-32057-169	M1		1	
	25-32057-171	M1		1	
	25-32057-175	M1		1	
	25-32057-177	M1		2	
	25-32057-179	M1		1	

STOCK	PART NUMBER	SOURCE CODE	FIGURE & INDEX NO.	QTY. PER A/C	MICROFILM INDEX
	25-32057-180	M1		1	
	25-32057-181	M1		1	
	25-32057-182	M1		1	
	25-32057-183	M1		1	
	25-32057-185	M1		2	
	25-32057-187	M1		2	
	25-32057-189	M1		4	
	25-32057-193	M1		1	
	25-32057-195	M1		1	
	25-32057-197	M1		1	
	25-32057-199	M1		1	
	25-32057-201	M1		1	
	25-32057-203	M1		1	
	25-32057-205	M1		1	
	25-32057-207	M1		1	
	25-32057-208	M1		1	
	25-32057-209	M1		1	
	25-32057-210	M1		1	
	25-32057-211	M1		1	
	25-32057-213	M1		2	
	25-32057-215	M1		2	
	25-32057-217	M1	108 - 85	1	
	25-32057-219	M1		2	
	25-32057-221	M1		1	
	25-32057-223	M1		1	
	25-32057-224	M1		1	
	25-32057-225	M1		1	
	25-32057-227	M1		3	
	25-32057-229	M1		1	
	25-32057-230	M1		1	
	25-32057-231	M1		2	
	25-32057-233	M1		2	
	25-32057-237	M1		2	
	25-32057-239	M1		1	
	25-32057-241	M1		1	
	25-32057-243	M1		1	
	25-32057-245	M1		1	
	25-32057-249	M1		2	
	25-32057-251			1	
	25-32057-253			1	
	25-32057-255			1	
	25-32057-257			1	
	25-32057-259			1	
	25-32057-263			2	
	25-32057-265			2	
	25-32057-267			1	
	25-32057-269			1	
	25-32057-270			1	
	25-32057-271			1	
	25-32057-273			1	
	25-32057-297			1	
	25-32057-299			2	
	25-32057-301	X2	108 -	1	
	25-32057-302	X2	109 -	1	
	25-32057-303	X2	108 -	1	
	25-32057-401			4	
	25-32057-403			1	
	25-32057-405			1	
	25-32058- 1	X2	108 - 85	1	F-183
	25-32058- 2	X2	109 - 63	1	
	25-32058- 3	M1		1	
	25-32058- 4	M1		1	
	25-32058- 5	M1		1	
	25-32058- 6	M1		1	
	25-32058- 7	M1		1	
	25-32058- 9	M1		2	
	25-32058- 11	M1		2	
	25-32058- 13	M1		1	
	25-32058- 15	M1		1	
	25-32058- 16	M1		1	
	25-32058- 17	M1		1	
	25-32058- 18	M1		1	
	25-32058- 19	M1		1	
	25-32058- 20	M1		1	
	25-32058- 21	M1		1	
	25-32058- 22	M1		1	
	25-32058- 23	M1		1	
	25-32058- 24	M1		1	
	25-32058- 27	M1		2	
	25-32058- 29	M1		1	
	25-32058- 30	M1		1	
	25-32058- 31	M1		1	
	25-32058- 32	M1		1	
	25-32058- 33	M1		1	
	25-32058- 34	M1		1	
	25-32058- 35	M1		2	
	25-32058- 37	M1		2	
	25-32058- 39	M1		2	
	25-32058- 41	M1		2	
	25-32058- 47	M1		1	
	25-32058- 48	M1		1	
	25-32058- 49	M1		1	
	25-32058- 90	M1		1	
	25-32058- 91	M1		1	
	25-32058- 92	M1		1	
	25-32058- 93	M1		1	

STOCK	PART NUMBER	SOURCE CODE	FIGURE & INDEX NO.	QTY. PER A/C	MICROFILM INDEX
	25-32058- 54	M1		1	
	25-32058- 55	M1		1	
	25-32058- 56	M1		1	
	25-32058- 57	M1		1	
	25-32058- 58	M1		1	
	25-32058- 59	M1		1	
	25-32058- 60	M1		1	
	25-32058- 61	M1		1	
	25-32058- 62	M1		1	
	25-32058- 63	M1		1	
	25-32058- 64	M1		1	
	25-32058- 65	M1		1	
	25-32058- 66	M1		1	
	25-32058- 67	M1		1	
	25-32058- 68	M1		1	
	25-32058- 69	M1		1	
	25-32058- 73	M1		1	
	25-32058- 74	M1		1	
	25-32058- 75	M1		1	
	25-32058- 76	M1		1	
	25-32058- 79	M1		1	
	25-32058- 80	M1		1	
	25-32058- 81	M1		1	
	25-32058- 82	M1		1	
	25-32058- 83	M1		1	
	25-32058- 84	M1		1	
	25-32058- 85	M1		2	
	25-32058- 89	M1		1	
	25-32058- 90	M1		1	
	25-32058- 91	M1		1	
	25-32058- 92			1	
	25-32058- 93	M1		1	
	25-32058- 94	M1		1	
	25-32058- 95	M1		2	
	25-32058- 97	M1		1	
	25-32058- 98	M1		1	
	25-32058- 99	M1		1	
	25-32058-100	M1		1	
	25-32058-101	M1		1	
	25-32058-102	M1		1	
	25-32058-103	M1		1	
	25-32058-105			2	
	25-32058-107			2	
	25-32059- 3	X1		1	F-184
	25-32059- 4	X1		1	
	25-32060- 1	X2	108 -	1	XA-206 XA-207 XA-208
	25-32060- 2	X2	109 -	1	
	25-32060- 3	M1		2	
	25-32060- 4	M1		1	
	25-32060- 5	M1		1	
	25-32060- 6	M1		1	
	25-32060- 7	M1		1	
	25-32060- 9	M1		1	
	25-32060- 13	M1		1	
	25-32060- 14	M1		1	
	25-32060- 15	M1		1	
	25-32060- 16	M1		1	
	25-32060- 17	M1		1	
	25-32060- 18	M1		1	
	25-32060- 19	M1		1	
	25-32060- 20	M1		1	
	25-32060- 21	M1		1	
	25-32060- 23	M1		1	
	25-32060- 25	M1		1	
	25-32060- 27	M1		1	
	25-32060- 29	M1		1	
	25-32060- 31	M1		1	
	25-32060- 33	M1		1	
	25-32060- 34	M1		1	
	25-32060- 37	M1		1	
	25-32060- 38	M1		1	
	25-32060- 39	M1		1	
	25-32060- 40	M1		1	
	25-32060- 41	M1		1	
	25-32060- 42	M1		1	
	25-32060- 43	M1		2	
	25-32060- 45	M1		2	
	25-32060- 47	M1		1	
	25-32060- 48	M1		1	
	25-32060- 50	M1		1	
	25-32060- 51	M1		1	
	25-32060- 52	M1		1	
	25-32060- 53	M1		1	
	25-32060- 54	M1		1	
	25-32060- 55	M1		1	
	25-32060- 56	M1		1	
	25-32060- 57	M1		2	
	25-32060- 59	X2	108 - 97	1	
	25-32060- 60	X2	109 - 84	1	
	25-32060- 61	M1		1	
	25-32060- 62	M1		1	
	25-32060- 63	M1		1	
	25-32060- 65	X2	108 -160	1	
	25-32060- 66	X2	109 - 87	1	
	25-32060- 67	M1		1	

STOCK	PART NUMBER	SOURCE CODE	FIGURE & INDEX NO.	QTY. PER A/C	MICROFILM INDEX
	25-32060- 69	M1		1	
	25-32060- 71	M1		1	
	25-32060- 73	M1		1	
	25-32060- 75	M1		1	
	25-32060- 81	M1		2	
	25-32060- 83	M1		1	
	25-32060- 85	M1		1	
	25-32060- 87	M1		3	
	25-32060- 89			1	
	25-32060- 93	M1		1	
	25-32060- 94	M1		2	
	25-32060- 95	M1		1	
	25-32060- 96	M1		2	
	25-32060- 99	M1		1	
	25-32060-100	M1		1	
	25-32060-101	M1		2	
	25-32060-103	M1		2	
	25-32060-105	M1		1	
	25-32060-107	M1		1	
	25-32060-109	M1		1	
	25-32060-111	M1		1	
	25-32060-113	M1		1	
	25-32060-115	M1		2	
	25-32060-125	M1		1	
	25-32060-126	M1		1	
	25-32060-127	M1		1	
	25-32060-128	M1		1	
	25-32060-129	M1		2	
	25-32060-131	M1		2	
	25-32060-133	M1		1	
	25-32060-135	M1		1	
	25-32060-137	M1		1	
	25-32060-141	M1		1	
	25-32060-142			1	
	25-32060-143	M1		2	
	25-32060-145	M1		1	
	25-32060-147	M1		1	
	25-32060-149	M1		1	
	25-32060-151	M1		1	
	25-32060-152	M1		1	
	25-32060-153	M1		1	
	25-32060-157	M1		2	
	25-32060-159	M1		4	
	25-32060-161	M1		1	
	25-32060-163	M1		1	
	25-32060-165	M1		1	
	25-32060-167	M1		1	
	25-32060-169	M1		1	
	25-32060-171	M1		1	
	25-32060-173	M1		2	
	25-32060-175	M1		2	
	25-32060-177	M1		2	
	25-32060-179			1	
	25-32060-181			1	
	25-32060-183			1	
	25-32060-186			1	
	25-32060-187			1	
	25-32060-188			1	
	25-32060-189			1	
	25-32060-223			2	
	25-32060-224			2	
	25-32060-231			1	
	25-32060-233			1	
	25-32060-301		108 -	1	
	25-32060-303			1	
	25-32060-304			1	
	25-32061- 3F	X		2	
	25-32062- 3	X1		2	F-189
	25-32062- 4	X1		2	
	25-32063- 1	M1		1	F-190
	25-32063- 2	M1		1	
	25-32063- 3	M1		1	
	25-32063- 5			1	
	25-32063- 6			1	
	25-32063- 7	M1		1	
	25-32063- 9	M1		4	
	25-32063- 10	M1		4	
	25-32063- 11			1	
	25-32063- 12			3	
	25-32063- 13			1	
	25-32063- 14	M1		1	
	25-32063- 15			1	
	25-32063- 16			2	
	25-32063-301			1	
	25-32063-302			1	
	25-32064- 1	M1	108 -	1	F-191
	25-32064- 2	M1		1	
	25-32064- 3			1	
	25-32064- 4			1	
	25-32064- 5	M1		1	
	25-32064- 6	M1		1	
	25-32064- 7	M1		1	
	25-32064- 8	M1		1	
	25-32064- 9	M1		1	
	25-32064- 10	M1		1	
	25-32064- 11	M1		1	

STOCK	PART NUMBER	SOURCE CODE	FIGURE & INDEX NO.	QTY. PER A/C	MICROFILM INDEX
	25-32064- 12	M1		1	
	25-32064- 15	M1		1	
	25-32064- 16	M1		1	
	25-32064- 21	M1		2	
	25-32064- 25	M1		2	
	25-32064- 27	M1		2	
	25-32064- 33	M1		1	
	25-32064- 34	M1		1	
	25-32064- 35	M1		2	
	25-32064- 37	M1		1	
	25-32064- 38	M1		1	
	25-32064- 39	M1		1	
	25-32064- 40	M1		1	
	25-32064- 41	M1		1	
	25-32064- 42	M1		1	
	25-32064- 43	M1		1	
	25-32064- 44	M1		1	
	25-32064- 45	M1		1	
	25-32064- 46	M1		1	
	25-32064- 47	M1		1	
	25-32064- 48	M1		1	
	25-32064- 49	M1		2	
	25-32064- 51	M1		1	
	25-32064- 53			3	
	25-32064- 54			1	
	25-32064- 55			1	
	25-32064-301	M1	108 -	1	
	25-32064-303			1	
	25-32065- 3	X2	108 -111	1	
	25-32065- 5	X2	108 -111	1	
	25-32066- 1	M1		1	F-193
	25-32066- 2	M1		1	
	25-32066- 4			1	
	25-32066- 5	M1		2	
	25-32066- 7	M1		1	
	25-32066- 8	M1		1	
	25-32066- 9	M1		2	
	25-32066- 11	M1		2	
	25-32066- 13	M1		1	
	25-32066- 14	M1		1	
	25-32066- 17	M1		1	
	25-32066- 18			1	
	25-32066- 20	M1		1	
	25-32066- 21	M1		1	
	25-32066- 22	M1		1	
	25-32066- 25	M1		2	
	25-32066- 27	M1		2	
	25-32066- 29	M1		2	
	25-32066- 31	M1		1	
	25-32066- 32	M1		1	
	25-32066- 33	M1		1	
	25-32066- 35	M1		1	
	25-32066- 37	M1		1	
	25-32066- 38	M1		1	
	25-32066- 39	M1		1	
	25-32066- 40	M1		1	
	25-32066- 41	M1		1	
	25-32066- 42			1	
	25-32066- 43			1	
	25-32066- 44			1	
	25-32066- 45			2	
	25-32066- 47			1	
	25-32066- 49			1	
	25-32066- 51			4	
	25-32066- 53			2	
	25-32066-301			1	
	25-32066-302			1	
	25-32067- 1	M1	108 -	1	F-194
	25-32067- 2	M1	109 -	1	
	25-32067- 3	M1		1	
	25-32067- 4	M1		1	
	25-32067- 5	M1		1	
	25-32067- 6	M1		1	
	25-32067- 7	M1		2	
	25-32067- 9	M1		1	
	25-32067- 10	M1		1	
	25-32067- 11	M1		1	
	25-32067- 12	M1		1	
	25-32067- 15	M1		1	
	25-32067- 16	M1		1	
	25-32067- 27	M1		1	
	25-32067- 28	M1		1	
	25-32067- 29	M1		2	
	25-32067- 31	M1		1	
	25-32067- 37	M1		1	
	25-32067- 38	M1		1	
	25-32067- 39			1	
	25-32067- 40			1	
	25-32067- 41	M1		1	
	25-32067- 42	M1		1	
	25-32067- 43	M1		2	
	25-32067- 45	M1		2	
	25-32067- 47	M1		2	
	25-32067- 49	M1		1	
	25-32067- 51	M1		1	
	25-32067- 53	M1		1	

STOCK	PART NUMBER	SOURCE CODE	FIGURE & INDEX NO.	QTY. PER A/C	MICROFILM INDEX
	25-32067- 54	M1		1	
	25-32067- 55	M1		1	
	25-32067- 56	M1		1	
	25-32067- 57	M1		1	
	25-32067- 58	M1		1	
	25-32067- 59	M1		1	
	25-32067- 60	M1		1	
	25-32067- 61	M1		1	
	25-32067- 63			2	
	25-32067- 64			2	
	25-32067- 65			2	
	25-32067-301			1	
	25-32067-302			1	
	25-32069- 1	M1		1	XA-209
	25-32069- 2	M1		1	
	25-32069- 3	M1		1	
	25-32069- 4	M1		1	
	25-32069- 5	M1		1	
	25-32069- 6	M1		1	
	25-32069- 7	M1		2	
	25-32069- 11	M1		2	
	25-32069- 13	M1		1	
	25-32069- 14	M1		1	
	25-32069- 17			1	
	25-32069- 18			1	
	25-32069- 19	M1		2	
	25-32069- 21	M1		2	
	25-32069- 23	M1		1	
	25-32069- 24	M1		1	
	25-32069- 25	M1		1	
	25-32069- 26			1	
	25-32069- 27			2	
	25-32069- 28			2	
	25-32069-301			1	
	25-32069-302			1	
	25-32070- 1	M1		1	F-196
	25-32070- 2	M1		1	
	25-32070- 3	M1		1	
	25-32070- 4	M1		1	
	25-32070- 5	M1		1	
	25-32070- 6	M1		1	
	25-32070- 7	M1		2	
	25-32070- 11	M1		1	
	25-32070- 13	M1		1	
	25-32070- 14	M1		1	
	25-32070- 15	M1		2	
	25-32070- 19			1	
	25-32070- 20			1	
	25-32070- 21	M1		1	
	25-32070- 22	M1		1	
	25-32070- 23			2	
	25-32070- 24			2	
	25-32070- 25			1	
	25-32070- 27			1	
	25-32070-301			1	
	25-32070-302			1	
	25-32071- 1	M1		1	F-197
	25-32071- 2	M1		1	
	25-32071- 3	M1		1	
	25-32071- 4	M1		1	
	25-32071- 5	M1		1	
	25-32071- 6	M1		1	
	25-32071- 7	M1		2	
	25-32071- 9	M1		2	
	25-32071- 11	M1		2	
	25-32071- 13	M1		1	
	25-32071- 14	M1		1	
	25-32071- 15	M1		1	
	25-32071- 16	M1		1	
	25-32071- 17			1	
	25-32071- 18			1	
	25-32071- 19			2	
	25-32071- 20			1	
	25-32071- 21			2	
	25-32071- 22			2	
	25-32071- 23			2	
	25-32071- 24			2	
	25-32071- 25			2	
	25-32071- 26			2	
	25-32071- 27			2	
	25-32071- 28			2	
	25-32071- 29			2	
	25-32071- 30			2	
	25-32071- 31			2	
	25-32071- 32			2	
	25-32071- 33			2	
	25-32071- 34			2	
	25-32071-301			1	
	25-32071-302			1	
	25-32071-303			1	
	25-32071-304			1	
	25-32072- 1	M1		1	F-198
	25-32072- 2	M1		1	
	25-32072- 5	M1		1	
	25-32072- 6	M1		1	
	25-32072- 7	M1		1	
	25-32072- 8	M1		1	
	25-32072- 9	M1		1	
	25-32072- 10	M1		1	
	25-32072- 11	M1		2	
	25-32072- 13	M1		1	
	25-32072- 14	M1		1	
	25-32072- 15	M1		1	
	25-32072- 16	M1		1	
	25-32072- 17	M1		2	
	25-32072- 19	M1		2	
	25-32072- 21	M1		2	
	25-32072- 23			2	
	25-32072- 24			2	
	25-32072- 25			1	
	25-32072- 26			1	
	25-32072- 27			3	
	25-32072- 28			3	
	25-32072- 29			3	
	25-32072- 30			3	
	25-32072- 31			3	
	25-32072- 32			3	
	25-32072- 33			1	
	25-32072- 34			1	
	25-32072- 35			1	
	25-32072- 36			1	
	25-32072-301			1	
	25-32072-302			1	
	25-32072-303			1	
	25-32072-304			1	
	25-32073- 1	M1		1	F-199 F-200 F-201
	25-32073- 2	M1		2	
	25-32073- 3	M1		1	
	25-32073- 4	M1		1	
	25-32073- 5	M1		2	
	25-32073- 7	M1		1	
	25-32073- 8	M1		1	
	25-32073- 9	M1		1	
	25-32073- 10	M1		1	
	25-32073- 11	M1		1	
	25-32073- 12	M1		1	
	25-32073- 13	M1		1	
	25-32073- 14	M1		1	
	25-32073- 15	M1		1	
	25-32073- 16	M1		1	
	25-32073- 17	M1		1	
	25-32073- 18	M1		1	
	25-32073- 19	M1		1	
	25-32073- 20	M1		1	
	25-32073- 21	M1		1	
	25-32073- 22	M1		1	
	25-32073- 23	M1		1	
	25-32073- 24	M1		1	
	25-32073- 25	M1		1	
	25-32073- 26	M1		1	
	25-32073- 27	M1		1	
	25-32073- 28	M1		1	
	25-32073- 29	M1		1	
	25-32073- 30	M1		1	
	25-32073- 33	M1		2	
	25-32073- 35	M1		1	
	25-32073- 36	M1		1	
	25-32073- 37	M1		1	
	25-32073- 38	M1		1	
	25-32073- 39	M1		1	
	25-32073- 40	M1		1	
	25-32073- 41	M1		2	
	25-32073- 43	M1		1	
	25-32073- 44	M1		1	
	25-32073- 45	M1		1	
	25-32073- 46	M1		1	
	25-32073- 47	M1		1	
	25-32073- 48	M1		1	
	25-32073- 49	M1		1	
	25-32073- 50	M1		1	
	25-32073- 51	M1		1	
	25-32073- 52	M1		1	
	25-32073- 53	M1		1	
	25-32073- 54	M1		1	
	25-32073- 55	M1		1	
	25-32073- 57	M1		1	
	25-32073- 59	M1		1	
	25-32073- 61	M1		1	
	25-32073- 63	M1		1	
	25-32073- 64	M1		1	
	25-32073- 65	M1		2	
	25-32073- 67	M1		2	
	25-32073- 69	M1		4	
	25-32073- 71	M1		4	
	25-32073- 73	M1		2	
	25-32073- 75	M1		2	
	25-32073- 77	M1		1	
	25-32073- 78	M1		1	
	25-32073- 79	M1		1	
	25-32073- 80	M1		1	
	25-32073- 81	M1		1	

STOCK	PART NUMBER	SOURCE CODE	FIGURE & INDEX NO.	QTY. PER A/C	MICROFILM INDEX
	25-32073- 82	M1		1	
	25-32073- 83	M1		2	
	25-32073- 84	M1		2	
	25-32073- 91	M1		2	
	25-32073- 92	M1		2	
	25-32073- 95	M1		1	
	25-32073- 96	M1		1	
	25-32073- 97	M1		3	
	25-32073- 98	M1		6	
	25-32073- 99	M1		1	
	25-32073-100	M1		1	
	25-32073-113	M1		1	
	25-32073-114	M1		1	
	25-32073-115	M1		1	
	25-32073-116	M1		1	
	25-32073-117	M1		3	
	25-32073-118	M1		3	
	25-32073-123	M1		2	
	25-32073-125	M1		4	
	25-32073-131	M1		1	
	25-32073-133	M1		1	
	25-32073-137	M1		1	
	25-32073-138	M1		1	
	25-32073-139	M1		2	
	25-32073-141	M1		2	
	25-32073-143	M1		1	
	25-32073-144	M1		1	
	25-32073-145	M1		1	
	25-32073-146	M1		1	
	25-32073-147	M1		1	
	25-32073-148	M1		1	
	25-32073-149	M1		1	
	25-32073-150	M1		1	
	25-32073-151	M1		2	
	25-32073-155	M1		1	
	25-32073-157			2	
	25-32073-159			2	
	25-32073-161			1	
	25-32073-162			1	
	25-32073-163			1	
	25-32073-164			1	
	25-32073-165			1	
	25-32073-166			1	
	25-32073-167			1	
	25-32073-168			1	
	25-32073-169			1	
	25-32073-170			1	
	25-32073-171			1	
	25-32073-172			1	
	25-32073-173			1	
	25-32073-174			1	
	25-32073-175			1	
	25-32073-176			1	
	25-32073-177			1	
	25-32073-178			1	
	25-32073-179			2	
	25-32073-180			2	
	25-32073-181			12	
	25-32073-183			1	
	25-32073-184			1	
	25-32073-185			1	
	25-32073-186			1	
	25-32073-187			1	
	25-32073-189			1	
	25-32073-191			2	
	25-32073-193			2	
	25-32073-195			1	
	25-32073-196			1	
	25-32073-197			2	
	25-32073-198			2	
	25-32073-199			4	
	25-32073-201			3	
	25-32073-202			3	
	25-32073-203			1	
	25-32073-204			1	
	25-32073-205			1	
	25-32073-206			1	
	25-32073-207			1	
	25-32073-209			1	
	25-32073-211			1	
	25-32073-213			1	
	25-32073-301			1	
	25-32073-302			1	
	25-32073-303			1	
	25-32073-304			1	
	25-32074- 1	M1		1	F-202
	25-32074- 2	M1		1	
	25-32074- 3	M1		1	
	25-32074- 4	M1		1	
	25-32074- 5	M1		1	
	25-32074- 6	M1		1	
	25-32074- 7	M1		1	
	25-32074- 8	M1		1	
	25-32074- 9	M1		2	
	25-32074- 13	M1		2	
	25-32074- 15	M1		1	
	25-32074- 16	M1		1	
	25-32074- 17	M1		1	
	25-32074- 18	M1		1	
	25-32074- 19	M1		2	
	25-32074- 21			2	
	25-32074- 23			1	
	25-32074- 24			1	
	25-32074-301			1	
	25-32074-302			1	
	25-32075- 1	M1		1	F-203
	25-32075- 2	M1		1	
	25-32075- 3	M1		1	
	25-32075- 4	M1		1	
	25-32075- 5	M1		1	
	25-32075- 6	M1		1	
	25-32075- 7	M1		1	
	25-32075- 8	M1		1	
	25-32075- 9	M1		1	
	25-32075- 10	M1		1	
	25-32075- 11	M1		2	
	25-32075- 13	M1		1	
	25-32075- 14	M1		1	
	25-32075- 15	M1		1	
	25-32075- 17	M1		1	
	25-32075- 18	M1		1	
	25-32075- 19			1	
	25-32075- 20			1	
	25-32075-301			1	
	25-32075-302			1	
	25-32076- 1	M1		2	F-204
	25-32076- 2	M1		2	
	25-32076- 3	M1		1	
	25-32076- 4	M1		1	
	25-32076- 5	M1		1	
	25-32076- 6	M1		1	
	25-32076- 7	M1		1	
	25-32076- 8	M1		1	
	25-32076- 9	M1		1	
	25-32076- 10	M1		1	
	25-32076- 11	M1		2	
	25-32076- 13	M1		1	
	25-32076- 15	M1		1	
	25-32076- 16	M1		1	
	25-32076- 17	M1		1	
	25-32076- 18	M1		1	
	25-32076- 19	M1		1	
	25-32076- 20	M1		1	
	25-32076- 21	M1		1	
	25-32076- 23	M1		1	
	25-32076- 24	M1		1	
	25-32076- 25	M1		1	
	25-32076- 26	M1		1	
	25-32076- 27	M1		2	
	25-32076- 29	M1		2	
	25-32076- 30	M1		2	
	25-32076- 31	M1		1	
	25-32076- 32	M1		1	
	25-32076- 37			1	
	25-32076- 38			1	
	25-32076- 39			1	
	25-32076- 41			1	
	25-32076- 42			2	
	25-32076- 43			2	
	25-32076- 44			3	
	25-32076-301			1	
	25-32076-302			1	
	25-32077- 1	M1		1	F-205
	25-32077- 2	M1		1	
	25-32077- 3	M1		1	
	25-32077- 4	M1		1	
	25-32077- 5	M1		1	
	25-32077- 6	M1		1	
	25-32077- 7	M1		1	
	25-32077- 8	M1		1	
	25-32077- 9	M1		1	
	25-32077- 11	M1		2	
	25-32077- 13	M1		1	
	25-32077- 14	M1		1	
	25-32077- 15	M1		1	
	25-32077- 16	M1		1	
	25-32077- 17	M1		1	
	25-32077- 18	M1		1	
	25-32077- 23	M1		2	
	25-32077- 24	M1		2	
	25-32077- 25			1	
	25-32077- 26			1	
	25-32077- 27			1	
	25-32077- 28			1	
	25-32077- 29			2	
	25-32077-301			1	
	25-32077-302			1	
	25-32078- 1	M1		1	F-206
	25-32078- 2	M1		1	
	25-32078- 3	M1		1	
	25-32078- 4	M1		1	
	25-32078- 5	M1		1	

STOCK	PART NUMBER	SOURCE CODE	FIGURE & INDEX NO.	QTY. PER A/C	MICROFILM INDEX
	25-32078- 6	M1		1	
	25-32078- 7	M1		1	
	25-32078- 8	M1		1	
	25-32078- 9	M1		1	
	25-32078- 10	M1		1	
	25-32078- 11	M1		2	
	25-32078- 13	M1		1	
	25-32078- 14	M1		1	
	25-32078- 19	M1		1	
	25-32078- 20	M1		1	
	25-32078- 23			1	
	25-32078- 24			1	
	25-32078- 27			1	
	25-32078- 31			2	
	25-32078- 32			2	
	25-32078- 33			2	
	25-32078- 34			2	
	25-32078- 35			1	
	25-32078- 36			1	
	25-32078- 37			2	
	25-32078- 38			2	
	25-32078- 39			1	
	25-32078- 40			1	
	25-32078-301			2	
	25-32078-302			2	
	25-32079- 1	M1		1	F-207
	25-32079- 2	M1		1	
	25-32079- 3	M1		1	
	25-32079- 4	M1		1	
	25-32079- 5	M1		1	
	25-32079- 6	M1		1	
	25-32079- 7	M1		1	
	25-32079- 8	M1		1	
	25-32079- 9	M1		2	
	25-32079- 11	M1		1	
	25-32079- 12	M1		1	
	25-32079- 13	M1		1	
	25-32079- 14	M1		1	
	25-32079- 19	M1		1	
	25-32079- 20	M1		1	
	25-32079- 21	M1		1	
	25-32079- 23	M1		2	
	25-32079- 24	M1		1	
	25-32079- 25	M1		2	
	25-32079- 27			1	
	25-32079- 28			1	
	25-32079- 29			1	
	25-32079- 30			1	
	25-32079- 31			2	
	25-32079- 35			1	
	25-32079- 36			1	
	25-32079- 37			1	
	25-32079- 38			1	
	25-32079-301			1	
	25-32079-302			1	
	25-32080- 1	M1		1	F-209 F-210
	25-32080- 2	M1		1	
	25-32080- 3	M1		2	
	25-32080- 5	M1		1	
	25-32080- 6	M1		1	
	25-32080- 7	M1		1	
	25-32080- 8	M1		1	
	25-32080- 9	M1		1	
	25-32080- 10	M1		1	
	25-32080- 11	M1		1	
	25-32080- 12	M1		1	
	25-32080- 13	M1		1	
	25-32080- 14	M1		1	
	25-32080- 15	M1		2	
	25-32080- 17	M1		1	
	25-32080- 19	M1		1	
	25-32080- 21	M1		1	
	25-32080- 22	M1		1	
	25-32080- 23	M1		1	
	25-32080- 24	M1		1	
	25-32080- 25	M1		1	
	25-32080- 26	M1		1	
	25-32080- 27	M1		1	
	25-32080- 28	M1		1	
	25-32080- 29	M1		1	
	25-32080- 30	M1		1	
	25-32080- 31	M1		1	
	25-32080- 32	M1		1	
	25-32080- 33	M1		1	
	25-32080- 34	M1		1	
	25-32080- 35	M1		1	
	25-32080- 36	M1		1	
	25-32080- 37	M1		1	
	25-32080- 38	M1		1	
	25-32080- 39	M1		2	
	25-32080- 41	M1		2	
	25-32080- 43	M1		2	
	25-32080- 45	M1		1	
	25-32080- 47	M1		2	
	25-32080- 49	M1		2	
	25-32080- 51	M1		2	

STOCK	PART NUMBER	SOURCE CODE	FIGURE & INDEX NO.	QTY. PER A/C	MICROFILM INDEX
	25-32080- 53	M1		2	
	25-32080- 55	M1		1	
	25-32080- 59	M1		2	
	25-32080- 61	M1		2	
	25-32080- 63	M1		2	
	25-32080- 65	M1		1	
	25-32080- 66	M1		1	
	25-32080- 67	M1		1	
	25-32080- 68	M1		1	
	25-32080- 69			1	
	25-32080- 71	M1		1	
	25-32080- 72	M1		1	
	25-32080- 73	M1		1	
	25-32080- 74	M1		1	
	25-32080- 75	M1		1	
	25-32080- 76	M1		1	
	25-32080- 77	M1		1	
	25-32080- 78	M1		1	
	25-32080- 79	M1		2	
	25-32080- 81	M1		1	
	25-32080- 82	M1		1	
	25-32080- 83	M1		1	
	25-32080- 84	M1		1	
	25-32080- 85	M1		1	
	25-32080- 86	M1		1	
	25-32080- 87	M1		2	
	25-32080- 89	M1		2	
	25-32080- 91	M1		2	
	25-32080- 93			1	
	25-32080- 94			1	
	25-32080- 95			1	
	25-32080- 96			1	
	25-32080- 97			1	
	25-32080- 98			1	
	25-32080- 99			1	
	25-32080-100			1	
	25-32080-101			2	
	25-32080-103			1	
	25-32080-143			1	
	25-32080-144			3	
	25-32080-301			1	
	25-32080-302			1	
	25-32081- 1	M1		1	F-211
	25-32081- 3	M1		1	
	25-32081- 5	M1		1	
	25-32081- 6	M1		1	
	25-32081- 7	M1		1	
	25-32081- 8	M1		1	
	25-32081- 9	M1		1	
	25-32081- 10	M1		1	
	25-32081- 11	M1		1	
	25-32081- 12	M1		1	
	25-32081- 13	M1		1	
	25-32081- 14	M1		1	
	25-32081- 15	M1		1	
	25-32081- 16	M1		1	
	25-32081- 17	M1		1	
	25-32081- 18	M1		1	
	25-32081- 19	M1		5	
	25-32081- 20	M1		5	
	25-32081- 21	M1		3	
	25-32081- 23	M1		1	
	25-32081- 25	M1		1	
	25-32081- 26	M1		1	
	25-32081- 27	M1		1	
	25-32081- 28	M1		1	
	25-32082- 1	M1	108 -	1	XA-210 XA-211 XA-212
	25-32082- 2	M1	109 -	1	
	25-32082- 3	M1		1	
	25-32082- 4	M1		1	
	25-32082- 5	M1		1	
	25-32082- 6	M1		1	
	25-32082- 7	M1		1	
	25-32082- 8	M1		1	
	25-32082- 9	M1		2	
	25-32082- 11	M1		1	
	25-32082- 12	M1		1	
	25-32082- 13	M1		2	
	25-32082- 15	M1		1	
	25-32082- 16	M1		1	
	25-32082- 17	M1		2	
	25-32082- 19	M1		1	
	25-32082- 20	M1		1	
	25-32082- 21	M1		1	
	25-32082- 23	M1		1	
	25-32082- 29	M1		1	
	25-32082- 30	M1		1	
	25-32082- 33	M1		1	
	25-32082- 34	M1		1	
	25-32082- 35	M1		1	
	25-32082- 36	M1		1	
	25-32082- 37	M1		1	
	25-32082- 38	M1		1	
	25-32082- 39	M1		1	
	25-32082- 40	M1		1	

STOCK	PART NUMBER	SOURCE CODE	FIGURE & INDEX NO.	QTY. PER A/C	MICROFILM INDEX
	25-32082- 41	M1		1	
	25-32082- 42	M1		1	
	25-32082- 43	M1		1	
	25-32082- 45	M1		1	
	25-32082- 47	M1		1	
	25-32082- 48	M1		1	
	25-32082- 49	M1		1	
	25-32082- 50	M1		1	
	25-32082- 53	M1		1	
	25-32082- 54	M1		1	
	25-32082- 55	M1		1	
	25-32082- 56	M1		1	
	25-32082- 57	M1		1	
	25-32082- 59	M1		1	
	25-32082- 61	M1		2	
	25-32082- 63	M1		2	
	25-32082- 65	M1		2	
	25-32082- 67	M1		2	
	25-32082- 69	M1		4	
	25-32082- 71	M1		1	
	25-32082- 73	M1		2	
	25-32082- 75	M1		4	
	25-32082- 77	M1		1	
	25-32082- 79	M1		1	
	25-32082- 81	M1		1	
	25-32082- 83	M1		2	
	25-32082- 85	M1		1	
	25-32082- 86	M1		1	
	25-32082- 87	M1		1	
	25-32082- 88	M1		1	
	25-32082- 89	M1		1	
	25-32082- 90	M1		1	
	25-32082- 91	M1		1	
	25-32082- 92	M1		1	
	25-32082- 93	M1		1	
	25-32082- 94	M1		1	
	25-32082- 95	M1		2	
	25-32082- 97	M1		2	
	25-32082- 99	M1		2	
	25-32082-101	M1		1	
	25-32082-102	M1		1	
	25-32082-103	M1		2	
	25-32082-105	M1		1	
	25-32082-106	M1		1	
	25-32082-107	M1		2	
	25-32082-109	M1		1	
	25-32082-110	M1		1	
	25-32082-111	M1		2	
	25-32082-113	M1		1	
	25-32082-115	M1		1	
	25-32082-116	M1		1	
	25-32082-117	M1		2	
	25-32082-119	M1		1	
	25-32082-120	M1		1	
	25-32082-121			2	
	25-32082-122			2	
	25-32082-123			1	
	25-32082-124			1	
	25-32082-301	M1	108 -	1	
	25-32082-302	M1	109 -	1	
	25-32083- 5	M1	108 - 66	2	C-486
	25-32083- 6	M1	109 -101	2	
	25-32084- 3	M1	108 - 21	1	C-487
	25-32085- 1			1	
	25-32085- 2			1	
	25-32085- 3			1	
	25-32085- 4			1	
	25-32085-3-4C			2	
	25-32086- 5	M1	108 - 25	1	B-495
	25-32086- 6	M1	109 - 25	1	
	25-32087- 1			1	
	25-32087- 2			1	
	25-32087- 3			1	
	25-32087- 4			1	
	25-32087- 5			2	
	25-32087- 6			2	
	25-32087- 7			2	
	25-32087- 8			2	
	25-32088- 3	M1	108 -115	1	B-496
	25-32088- 4	M1	109 - 97	1	
R82MDA-	25-32089- 3	P1	108 - 29	1	C-488
R82MDA-	25-32089- 4	P1	109 - 29	1	
	25-32090- 1	X2	108 -	1	
	25-32090- 2	X2	109 -	1	
	25-32090- 3	X1	108 - 92	2	
	25-32090- 4	X1	109 - 13	2	
	25-32090- 5			2	
	25-32090- 6			2	
	25-32090-301			1	
	25-32090-302			1	
	25-32091- 3	X1	108 - 18	1	F-216
	25-32092- 1	M1		1	
	25-32092- 2	M1		1	
	25-32092- 3	M1		1	
	25-32092- 4	M1		1	
	25-32092- 5			2	

STOCK	PART NUMBER	SOURCE CODE	FIGURE & INDEX NO.	QTY. PER A/C	MICROFILM INDEX
	25-32093- 1	M1		1	F-218
	25-32093- 2	M1		1	
	25-32093- 3	M1		1	
	25-32093- 4	M1		1	
	25-32093- 5	M1		1	
	25-32093- 6	M1		1	
	25-32093- 7	M1		1	
	25-32093- 8	M1		1	
	25-32094- 1	M1	108 -	1	XA-213 XA-214
	25-32094- 2	M1	109 -	1	
	25-32094- 3	M1	108 - 30	1	
	25-32094- 4	M1	109 - 30	1	
	25-32094- 5	M1		2	
	25-32094- 7	M1		1	
	25-32094- 9	M1		1	
	25-32094- 10	M1		1	
	25-32094- 11			4	
	25-32094- 13			1	
	25-32094- 15			1	
	25-32094- 17			1	
	25-32094- 19			1	
	25-32094- 21			1	
	25-32094- 23			2	
	25-32094-301			1	
	25-32094-302			1	
	25-32095- 1	X1	114 - 26	1	F-221
	25-32095- 3	X1		1	
	25-32096- 3F	X1		2	C-489
	25-32097- 1	X2	108 - 67	1	F-222
	25-32097- 2	X2	109 - 60	1	
	25-32097- 3	X1		1	
	25-32097- 3F	X1		1	
	25-32097- 4	X1		1	
	25-32097- 4F	X1		1	
	25-32098- 1		108 -	2	
			109 -		
	25-32099- 3			2	
	25-32099- 9		108 - 65	2	
			109 - 59		
	25-32099- 11			4	
	25-32099- 13			4	
	25-32099- 15			2	
	25-32100- 3	M1		1	F-223
R82MDA-	25-32101- 3	P1	108 - 80	1	F-224
R82MDA-	25-32101- 4	P1	109 - 75	1	
	25-32102- 3	P1	109 - 99	1	
	25-32103- 3F	X1		2	F-226
R82MDA-	25-32104- 3	P1	108 -103	1	F-227
R82MDA-	25-32104- 4	P1	109 - 90	1	
R82MDA-	25-32105- 3	P1	108 -104	1	
	25-32105- 3F	X1		1	F-228
	25-32106- 1	X2	108 - 72	1	F-229
	25-32106- 3	X1		1	
	25-32107- 3			1	
	25-32108- 1	X2	108 -	1	F-230 F-231
	25-32108- 3	M1		1	
	25-32108- 5	M1		1	
	25-32108- 7	M1		1	
	25-32108- 9	X1	108 - 19	1	
	25-32108- 13	M1		1	
	25-32108- 15	M1		1	
	25-32108- 19	M1		1	
	25-32108- 21	M1		1	
	25-32108- 23	M1		1	
	25-32108- 25	M1		1	
	25-32108- 27	M1		1	
	25-32108- 28	M1		1	
	25-32108- 29	M1		1	
	25-32108- 31	M1		1	
	25-32108- 33	M1		1	
	25-32108- 35	M1		1	
	25-32108- 37	M1		1	
	25-32108- 39	M1		1	
	25-32108- 41	M1		1	
	25-32108- 43	M1		1	
	25-32108- 45	M1		1	
	25-32108- 47	M1		1	
	25-32108- 49	M1		1	
	25-32108- 51	M1		1	
	25-32108- 53	M1		1	
	25-32108- 55	M1		1	
	25-32108- 57	M1		1	
	25-32108- 59	M1		1	
	25-32108- 61	M1		1	
	25-32108- 63	M1		1	
	25-32108- 65	M1		2	
	25-32108- 67	M1		1	
	25-32108- 69	M1		1	
	25-32108- 71	M1		1	
	25-32108- 73	M1		1	
	25-32108- 75	M1		2	
	25-32108- 77	M1		2	
	25-32108- 79	M1		1	
	25-32108- 81	M1		1	
	25-32108- 83	M1		1	
	25-32108- 85	M1		1	

STOCK	PART NUMBER	SOURCE CODE	FIGURE & INDEX NO.	QTY. PER A/C	MICROFILM INDEX
	25-32108- 87	X1	108 - 22	1	
	25-32108- 89	M1		2	
	25-32108- 91	M1		1	
	25-32108- 95	M1		1	
	25-32109- 3	X2	108 - 93	1	F-232
	25-32109- 5			1	
	25-32111- 3	M1	108 -121	2	C-491
	25-32112- 3	M1		1	F-233
	25-32112- 4	M1		1	
	25-32113- 3	P1	108 - 50	1	C-492
	25-32113- 4	P1	109 - 46	1	
	25-32113-3-4F	X1		2	
	25-32114- 3	P1	108 - 48	1	B-497
	25-32114- 4	P1	109 - 48	1	
	25-32115- 3	M1		1	F-234
	25-32115- 4	M1		2	
	25-32115- 5	M1		2	
	25-32115- 7	M1		2	
	25-32115- 9	M1		1	
	25-32115- 10	M1		1	
	25-32115- 11	M1		2	
	25-32115- 13	M1		2	
	25-32115- 15	M1		1	
	25-32115- 16	M1		1	
	25-32115- 17	M1		2	
	25-32115- 19	M1		2	
	25-32115- 21	M1		1	
	25-32115- 22	M1		1	
	25-32115- 23	M1		2	
	25-32115- 25	M1		2	
	25-32115- 27	M1		1	
	25-32115- 28	M1		1	
	25-32115- 29	M1		1	
	25-32115- 30	M1		1	
	25-32115- 31	M1		1	
	25-32115- 32	M1		1	
	25-32115- 33	M1		1	
	25-32115- 34	M1		1	
	25-32115- 35	M1		1	
	25-32115- 36	M1		1	
	25-32115- 39	M1		3	
	25-32115- 41	M1		2	
	25-32115- 45	M1		1	
	25-32115- 47	M1		1	
	25-32115- 48	M1		1	
	25-32115- 56	M1		1	
	25-32115- 57	M1		1	
	25-32115- 58	A1		1	
	25-32116- 1	*	108 -	1	
	25-32116- 2	*	109 -	1	C-493
	25-32118- 3	M1	110 -	1	C-494
	25-32118- 4		110 - 17	1	
	25-32120- 3	M1	110 - 7	2	A-270
	25-32122- 1	M1	110 - 1	1	C-495
	25-32122- 2	M1	110 - 1	1	
	25-32122- 5	M1		1	
	25-32122- 9	M1		4	
	25-32122-301		110 - 1	1	
	25-32122-302		110 - 1	1	
	25-32125- 1	A	110 -	1	
	25-32125- 2	A	110 - 11	1	C-496
	25-32125- 3	M1		6	
	25-32125- 5	M1		4	
	25-32125- 7	M1		4	
	25-32125- 9	M1		4	
	25-32125- 11	M1		2	
	25-32126- 1	M1	108 -	1	F-235
	25-32126- 2	M1	109 -	1	
	25-32126- 3	M1	108 -	1	
	25-32126- 4	M1	109 -	1	
	25-32126- 5			1	
	25-32126- 6			1	
	25-32126- 7			1	
	25-32126- 8			1	
	25-32127- 3	M1	107 - 3	4	
	25-32128- 1	M1	114 - 13	1	F-236
	25-32128- 3	M1		1	
	25-32128- 9	M1		1	
	25-32128- 11	M1	114 - 17	1	
	25-32128- 13	M1	114 - 16	1	
	25-32128- 15	M1		1	
	25-32128- 16	M1		1	
	25-32128- 17	M1		1	
	25-32128- 19	M1		1	
	25-32128- 20	M1		1	
	25-32128- 21	M1		1	
	25-32128-301	M1	114 - 13	1	
	25-32129- 3	M1		1	F-237
	25-32129- 4	M1		1	
	25-32129- 5	M1		1	
	25-32129- 6	M1		1	
	25-32129- 7	M1		1	
	25-32129- 8	M1		1	
	25-32129- 9	M1		1	
	25-32129- 10	M1		1	
	25-32129- 11	M1		2	
	25-32129- 12	M1		2	
	25-32129- 13	M1		1	
	25-32129- 14	M1		1	
	25-32129- 15	M1		1	
	25-32129- 17	M1		1	
	25-32129- 19	M1		1	
	25-32129-302	M1		1	
	25-32130- 1	M1		1	XA-215
	25-32130- 2	M1		1	
	25-32130- 3	M1		1	
	25-32130- 4	M1		1	
	25-32130- 5	M1		1	
	25-32130- 6	M1		1	
	25-32130- 7	M1		1	
	25-32130- 8	M1		1	
	25-32130- 9	M1		1	
	25-32130- 10	M1		1	
	25-32130- 11	M1		1	
	25-32130- 12	M1		1	
	25-32130- 13	M1		1	
	25-32130- 14	M1		1	
	25-32130- 15	M1		1	
	25-32130- 16	M1		1	
	25-32130- 17	M1		1	
	25-32130- 18	M1		1	
	25-32130- 19	M1		1	
	25-32130- 20	M1		1	
	25-32130- 21	M1		1	
	25-32130- 22	M1		1	
	25-32130- 23	M1		2	
	25-32130- 25	M1		2	
	25-32130- 27	M1		1	
	25-32130- 28	M1		1	
	25-32130- 29	M1		1	
	25-32130- 30	M1		1	
	25-32130- 31	M1		2	
	25-32130- 33	M1		4	
	25-32130- 35	M1		1	
	25-32130- 39			1	
	25-32130- 41			1	
	25-32130- 43			1	
	25-32130- 45			2	
	25-32130- 47			1	
	25-32130-301			1	
	25-32131- 1	M1		1	D-359
	25-32131- 2	M1	109 -	1	
	25-32131- 3	M1		1	
	25-32131- 5	M1		1	
	25-32131- 7	M1		1	
	25-32131- 9	M1		1	
	25-32131- 11	M1		1	
	25-32131- 13	M1		1	
	25-32131- 14	M1		1	
	25-32131- 15	M1		1	
	25-32131- 16	M1		1	
	25-32132- 1	M1	107 -	1	
	25-32132- 3	M1		1	XA-216
	25-32132- 5	M1		1	
	25-32132- 7	M1		1	
	25-32132- 9	M1		1	
	25-32132- 13	M1		1	
	25-32132- 15	M1		1	
	25-32132- 17	M1		1	
	25-32132- 19	M1		1	
	25-32132- 21	M1		1	
	25-32132- 23	M1		1	
	25-32132- 25	M1		1	
	25-32132- 27	M1		1	
	25-32132- 31	M1		1	
	25-32132- 33	M1		1	
	25-32132- 35	M1		1	
	25-32132- 37	M1		1	
	25-32132- 39	M1		1	
	25-32132- 41	M1		1	
	25-32132- 43			2	
	25-32132- 44			2	
	25-32132- 45			4	
	25-32132- 47			4	
	25-32132- 49			1	
	25-32132- 51			1	
	25-32132- 53			1	
	25-32132- 55			1	
	25-32132- 57			1	
	25-32132- 59			1	
	25-32132- 61			1	
	25-32132- 63			1	
	25-32132- 65			1	
	25-32132- 67			1	
	25-32132- 69			1	
	25-32132- 71			1	
	25-32132- 73			1	
	25-32132-301		107 -	1	
	25-32132-303			1	
	25-32133- 1	M1		1	C-497 F-240
	25-32133- 2	M1		1	
	25-32133- 7	M1		2	

STOCK	PART NUMBER	SOURCE CODE	FIGURE & INDEX NO.	QTY. PER A/C	MICROFILM INDEX
	25-32133- 11	M1		2	
	25-32133- 13	M1		1	
	25-32133- 15	M1		4	
	25-32133- 17	M1		1	
	25-32133- 18	M1		1	
	25-32133- 19	M1		1	
	25-32133- 20	M1		1	
	25-32133- 22	M1		1	
	25-32133- 25	M1		2	
	25-32133- 29	M1		1	
	25-32133- 31	M1		1	
	25-32133- 33	M		1	
	25-32133- 34	M		1	
	25-32133- 35	M		1	
	25-32133- 36	M		1	
	25-32133- 37	M1		1	
	25-32133- 38			1	
	25-32133- 39	M1		1	
	25-32133- 40	M1		1	
	25-32133- 41	M1		1	
	25-32133- 42	M1		1	
	25-32133- 43	M1		1	
	25-32133- 45	M1		1	
	25-32133-301	M1		1	
	25-32134- 1	M1	108 -	1	C-498
	25-32134- 2	M1	109 -	1	
	25-32134- 3	M1		1	
	25-32134- 4	M1		1	
	25-32135- 3	M1		1	F-241
	25-32135- 4	M1		1	
	25-32135- 5	M1		1	
	25-32135- 6	M1		1	
	25-32135- 7	M1		1	
	25-32135- 9	M1		1	
	25-32135- 11	M1		1	
	25-32135- 13	M1		1	
	25-32135- 15	M1		1	
	25-32135- 17			1	
	25-32135- 19			1	
	25-32135- 21			1	
	25-32135- 23			1	
	25-32135- 25			1	
	25-32136- 3F			2	B-498
R82MDA-	25-32138- 3	P1	114 - 23	1	C-499
	25-32139- 3	X2	108 - 64	2	XA-217
	25-32139- 4	X2	109 - 58	1	
	25-32140- 3F	X1		2	
	25-32141- 3	X	108 - 98	1	F-244
	25-32141- 5	X	109 - 85	1	
	25-32142- 3F	X1		1	F-245
	25-32144- 3F	X1		2	F-246
	25-32145- 5F	X1		2	C-500
	25-32145- 7		110 -	1	
	25-32145- 8		110 - 15	1	
	25-32146- 3F	X1		2	F-247
	25-32147- 3F	X1		1	F-248
	25-32148- 3F	X1		1	F-249
R82MDA-	25-32149- 3	P1	109 - 99	1	F-250
	25-32150- 1	M1	108 - 26	1	B-499
	25-32150- 2	M1	109 - 26	1	
	25-32150- 5	M1		1	
	25-32150- 6	M1		1	
	25-32151- 3	X2	108 - 34	1	C-501
	25-32151- 3F	X1		1	
R82MDA-	25-32151- 4	P1	109 - 34	1	
	25-32151- 4F	X1		1	
	25-32152- 1	M1		1	F-251
	25-32152- 2	M1		1	
	25-32152- 5	M1		1	
	25-32152- 6	M1		1	
	25-32152- 7	M1		1	
	25-32152- 8	M1		1	
	25-32152- 9			1	
	25-32152- 10			1	
	25-32153- 5	M1	108 -117	1	B-500
	25-32153- 6	M1	107 - 2	1	
	25-32154- 3	X1		1	
	25-32154- 4	X1		1	
	25-32155- 3	M1	108 -122	1	C-502
	25-32155- 4	M1	109 -100	1	
	25-32156- 3F	X1		2	C-503
	25-32157- 3	M1	108 - 57	3	A-272
			114 - 14		
			114 - 34		
	25-32158- 3F			2	
	25-32159- 3	M1		1	F-104
	25-32160- 3	M1		1	B-501
	25-32160- 4	M1		1	
	25-32161- 1	M1		1	XA-218
	25-32161- 2	M1		1	
	25-32161- 5	M1		1	
	25-32161- 7	M1		1	
	25-32161- 11	M1		4	
	25-32161- 13	M1		2	
	25-32161- 15			2	
	25-32161- 17			1	

STOCK	PART NUMBER	SOURCE CODE	FIGURE & INDEX NO.	QTY. PER A/C	MICROFILM INDEX
	25-32161- 19			1	
	25-32161-301			1	
	25-32161-302			1	
	25-32162- 3F	X1		1	B-502
	25-32162- 4F	X1		1	
R82MDA-	25-32163- 1	P1	108 - 86	1	C-505
R82MDA-	25-32163- 2	P1	109 - 64	1	
	25-32163- 3	X1	108 -	1	
	25-32163- 4	X1	109 -	1	
	25-32164- 1	M1		1	XA-219
	25-32164- 2	M1		1	
	25-32164- 5	M1		1	
	25-32164- 7	M1		3	
	25-32164- 15	M1		1	
	25-32164- 17	M1		1	
	25-32164- 21	M1		1	
	25-32164- 23			1	
	25-32164- 25			1	
	25-32164- 27			1	
	25-32164- 28			1	
	25-32164- 29			1	
	25-32164- 31			1	
	25-32164- 33			1	
	25-32164-301			1	
	25-32164-302			1	
	25-32165- 1	M1		1	C-506
	25-32165- 3	M1		1	
	25-32165- 5	M1		1	
	25-32165- 7	M1		1	
	25-32166- 3			1	
	25-32166- 4			1	
R82MDA-	25-32167- 3	P1	109 - 54	1	B-503
	25-32167- 3F	X1		1	
	25-32168- 3	M1	183 - 19	1	C-507
	25-32168- 4	M1	183 - 19	1	
	25-32169- 3	M1	14 - 43	32	A-273
			14 - 76		
			14 - 93		
	25-32169- 5	M1	14 - 42	8	
			14 - 57		
			14 - 77		
			14 - 92		
	25-32170- 3	M1	108 -	1	
	25-32171- 3		108 - 66	4	A-275
			109 - 98		
	25-32172- 3	M1	108 - 29	2	A-276
			109 - 29		
	25-32172- 5	M1	108 -	4	
	25-32173- 3	M1	108 - 87	3	
	25-32174- 3	M1	14 - 44	8	A-278
			14 - 56		
	25-32174- 5	M1	14 - 78	8	
	25-32174- 7		14 - 91	4	
	25-32175- 3	X1		3	C-508
	25-32175- 5	X1		1	
	25-32175- 7	X1		1	
	25-32175- 9	X1		1	
	25-32176- 3	X1		2	C-509
	25-32176- 5	X1		2	
	25-32177- 3	M1	108 - 31	1	F-255
	25-32177- 4	M1	109 - 31	1	
	25-32178- 3	M1		4	B-504
	25-32178- 4	M1		5	
	25-32178- 5	M1		2	
	25-32178- 6	M1		3	
	25-32178- 7	M1		2	
	25-32178- 8	M1		2	
	25-32178- 9	M1		1	
	25-32178- 10	M1		1	
	25-32178- 11	M1		1	
	25-32178- 12	M1		1	
	25-32179- 3	M1		24	A-279
	25-32179- 4	M1		24	
	25-32180- 1	M1		1	F-256
	25-32180- 2	M1		1	
	25-32180- 3	M1		1	
	25-32180- 4	M1		1	
	25-32180- 5	M1		2	
	25-32180- 6	M1		2	
	25-32180- 7	M1		2	
	25-32180- 8	M1		2	
	25-32180- 9	M1		1	
	25-32180- 10	M1		1	
	25-32180- 11	M1		1	
	25-32180- 12	M1		1	
	25-32182- 3	X2	108 - 38	3	C-510
			109 - 38		
	25-32182- 3F	X1		3	
	25-32183- 3	M1		6	F-257
	25-32183- 5	M1		4	
	25-32184- 3	M1	108 -120	1	
	25-32185- 3	M1		8	A-280
	25-32185- 4	M1		8	
	25-32185- 5	M1		8	
	25-32185- 6	M1		8	
	25-32186- 3	M1		2	A-281

STOCK	PART NUMBER	SOURCE CODE	FIGURE & INDEX NO.	QTY. PER A/C	MICROFILM INDEX
	25-32186- 4	M1		2	
	25-32186- 5	M1		2	
	25-32186- 6	M1		2	
	25-32186- 7	M1		2	
	25-32186- 8	M1		2	
	25-32186- 9	M1		2	
	25-32186- 10	M1		2	
	25-32186- 11	M1		2	
	25-32186- 12	M1		2	
	25-32186- 13	M1		1	
	25-32186- 14	M1		1	
	25-32187- 3	M1		1	F-259
	25-32187- 5	M1		1	
	25-32187- 7	M1		1	
	25-32187- 9	M1		1	
	25-32187- 11	M1		1	
	25-32187- 13	M1		1	
	25-32187- 15	M1		1	
	25-32187- 17	M1		2	
	25-32187- 19	M1		2	
	25-32187- 21	M1		1	
	25-32187- 23			1	
	25-32187- 25	M1		1	
	25-32187- 27	M1		1	
	25-32187- 29	M1		1	
	25-32187- 31	M1		1	
	25-32188- 3	M1		1	F-260
	25-32188- 5	M1		1	
	25-32188- 7	M1		1	
	25-32188- 9	M1		1	
	25-32188- 11	M1		1	
	25-32188- 13	M1		1	
	25-32188- 15	M1		1	
	25-32188- 17	M1		1	
	25-32188- 19	M1		1	
	25-32188- 21	M1		1	
	25-32188- 23			1	
	25-32188- 25			1	
	25-32188- 27			1	
	25-32189- 3	M1		6	C-511
	25-32190- 3	M1		5	B-505
	25-32190- 4	M1		5	
	25-32190- 5	M1		1	
	25-32190- 6	M1		1	
	25-32191- 3	X1		1	C-512
	25-32191- 5	X1		1	
	25-32192- 3	X1		1	C-513
	25-32192- 5	X1		1	
	25-32193- 1	M1	108 -	1	D-954
	25-32193- 3	M1		1	
	25-32193- 7	M1	108 -119	1	
	25-32193- 9	M	108 -118	1	
	25-32194- 3	M1		3	B-506
	25-32194- 4	M1		3	
	25-32196- 3	M1		1	C-514
	25-32196- 4	M1		1	
	25-32196- 5	M1		1	
	25-32196- 6	M1		1	
	25-32197- 3	M1	124 -	2	A-39
	25-32199- 3	M1		1	F-261
	25-32199- 4	M1		1	
	25-32200- 1	M1		1	
	25-32200- 3	M1		1	
	25-32200- 5	M1		1	
	25-32200- 7	M1		1	
	25-32200- 9	M1		1	
	25-32200- 11	M1		1	
	25-32200- 13	M1		1	
	25-32200- 15	M1		1	
	25-32200- 17	M1		1	
	25-32200- 19	M1		1	
	25-32200- 21	M1		1	
	25-32200- 23	M1		1	
	25-32201- 3	M1	108 -112	1	A-284
	25-32202- 3	M1		1	A-289
	25-32203- 1	M1	107 -	1	F-262
	25-32203- 3	M1	107 - 31	2	
	25-32203- 5	M1		4	
	25-32203- 7	M1		4	
	25-32203- 9	M1		2	
	25-32203- 11	M1		2	
	25-32204- 3	M1	107 - 0	1	F-263
	25-32205- 3	M1		6	B-507
	25-32205- 5	M1		1	
	25-32205- 7	M1		1	
	25-32206- 1	M1		7	A-286
	25-32206- 3	M1		4	
	25-32206- 5	M1		7	
	25-32206- 7	M1		4	
	25-32207- 9	M1		1	C-515
	25-32207- 9	M1		1	
	25-32208- 5	M1		1	F-264
	25-32208- 5	M1		1	
	25-32208- 6	M1		1	
	25-32208- 7	M1		1	
	25-32208- 8	M1		1	

STOCK	PART NUMBER	SOURCE CODE	FIGURE & INDEX NO.	QTY. PER A/C	MICROFILM INDEX
	25-32208- 11	M1		1	
	25-32209- 3	M1		1	
	25-32209- 4	M1		1	
	25-32209- 5	M1		1	
	25-32209- 6	M1		1	
	25-32210- 1	M1	108 -	2	F-265
	25-32210- 2	M1	109 -	1	
	25-32210- 3	M1	108 - 13	1	
			109 - 76		
	25-32210- 4			1	
	25-32210- 11	M1		2	
	25-32210- 17	M1		1	
	25-32210- 18	M1		1	
	25-32210- 19	M1	108 - 15	2	
			109 - 78		
	25-32210- 21	M1	108 - 14	2	
			109 - 77		
	25-32210- 23	M1		1	
	25-32210- 24	M1		1	
	25-32210- 27	M1		2	
	25-32210- 28	M1		2	
	25-32210- 29			1	
	25-32210- 30			1	
	25-32210-301			1	
	25-32211- 29	M1		1	XA-220
	25-32211- 31	M1		1	
	25-32211- 33	M1		1	
	25-32211- 35	M1		1	
	25-32212- 1	M1		1	B-509
	25-32213- 3	M1		4	B-510
	25-32214- 1	M	46 -	17	A-287
			46 - 85		
			46 -		
			47 -		
			47 -		
			47 -		
			47 -		
			106 - 4		
			139 - 27		
			139 - 38		
			140 - 4		
			141 - 8		
			141 -		
	25-32215- 1	A1	108 -	1	C-516
	25-32215- 2	A1	109 -	1	
	25-32215- 3	M1	108 - 91	1	
	25-32215- 4	M1	109 - 68	1	
	25-32216- 3	M1		4	A-40
	25-32217- 1	M1		1	C-517
	25-32217- 2			1	
	25-32217- 5	M1		1	
	25-32217- 6	M1		1	
	25-32217- 7	M1		1	
	25-32217- 8			1	
	25-32217- 9	M1		1	
	25-32217- 10			1	
	25-32218- 3	M1		1	D-959
	25-32218- 4	M1		1	
	25-32218- 5	M1		1	
	25-32218- 6	M1		1	
	25-32218- 7	M1		3	
	25-32219- 1	M1		1	F-268
	25-32219- 2	M1		1	
	25-32219- 3	M1		1	
	25-32219- 4	M1		1	
	25-32219- 9	M1		1	
	25-32219- 10	M1		1	
	25-32219- 13	M1		3	
	25-32219- 14	M1		3	
	25-32219- 15	M1		4	
	25-32219- 16	M1		4	
	25-32219- 17	M1		3	
	25-32219- 18	M1		3	
	25-32219- 19	M1		1	
	25-32219- 20	M1		1	
	25-32219- 21	M1		1	
	25-32219- 22	M1		1	
	25-32219- 23	M1		1	
	25-32219- 24	M1		1	
	25-32219- 25	M1		1	
	25-32219- 26	M1		1	
	25-32219- 27			1	
	25-32219- 28			1	
	25-32219- 29			2	
	25-32219-301			1	
	25-32219-302			1	
	25-32220- 1	M1		1	D-386
	25-32220- 2	M1		1	
	25-32220- 3	M1		1	
	25-32220- 4	M1		1	
	25-32220- 5	M1		1	
	25-32220- 6	M1		1	
	25-32220- 7	M1		1	
	25-32220- 8	M1		1	
	25-32220- 10			1	
	25-32220- 11			2	

STOCK	PART NUMBER	SOURCE CODE	FIGURE & INDEX NO.	QTY. PER A/C	MICROFILM INDEX
	25-32220- 13			2	
	25-32220- 14			2	
	25-32220- 15			2	
	25-32220-301			1	
	25-32220-302			1	
	25-32221- 1	M1	108 -114	1	B-511
	25-32221- 2	M1	109 - 96	1	
	25-32221- 3	M1		1	
	25-32221- 4	M1		1	
	25-32222- 1	M1		1	B-512
	25-32222- 2	M1		1	
	25-32222- 3	M1		2	
	25-32222- 5	M1		2	
	25-32223- 1	M1		1	F-269
	25-32223- 2	M1		1	
	25-32223- 3	M1		1	
	25-32223- 4	M1		1	
	25-32223- 5	M1		2	
	25-32223- 7	M1		2	
	25-32223- 9	M1		2	
	25-32223- 11	M1		2	
	25-32223- 13	M1		1	
	25-32223- 14	M1		1	
	25-32223- 15	M1		2	
	25-32223- 17	M1		2	
	25-32224- 1	M1		1	F-270
	25-32224- 2	M1		1	
	25-32224- 3	M1		1	
	25-32224- 4	M1		1	
	25-32224- 5	M1		1	
	25-32224- 6	M1		1	
	25-32224- 7	M1		1	
	25-32224- 8	M1		1	
	25-32224- 9	M1		2	
	25-32224- 11	M1		1	
	25-32224- 12	M1		1	
	25-32224- 13	M1		2	
	25-32224- 15	M1		2	
	25-32224- 16	M1		2	
	25-32225- 3	M1	107 - 1	2	
	25-32226- 1	M1	107 - 7	1	
	25-32226- 3	M1		1	B-513
	25-32227- 3	M1		1	F-271
	25-32227- 5	M1		1	
	25-32227- 7	M1		1	
	25-32227- 9	M1		1	
	25-32227- 11	M1		1	
	25-32227- 13	M1		1	
	25-32227- 17	M1		1	
	25-32227- 19	M1		1	
	25-32227- 21	M1		1	
	25-32227- 23	M1		1	
	25-32227- 25	M1		1	
	25-32227- 27	M1		1	
	25-32227- 29	M1		1	
	25-32227- 31	M1		1	
	25-32227- 33	M1		1	
	25-32227- 35	M1		1	
	25-32227- 37	M1		1	
	25-32227- 39	M1		1	
	25-32227- 41	M1		1	
	25-32227- 43	M1		1	
	25-32227- 45	M1		1	
	25-32227- 47	M1		4	
	25-32227- 49	M1		1	
	25-32227- 51			1	
	25-32227- 53			1	
	25-32227- 55			1	
	25-32227-301			1	
	25-32227-303			1	
	25-32228- 1	M1	109 - 91	1	C-518
	25-32228- 3	M1	109 - 92	1	
	25-32228- 5	M1		1	
	25-32228- 7	M1		1	
	25-32228- 9	M1		1	
	25-32229- 1	M1		1	F-272
	25-32229- 3	M1		1	
	25-32229- 5	M1		1	
	25-32229- 7	M1		1	
	25-32229- 9	M1		1	
	25-32229- 11	M1		2	
	25-32229- 13	M1		2	
	25-32229- 15	M1		1	
	25-32229- 17	M1		1	
	25-32229- 19	M1		1	
	25-32229- 21	M1		1	
	25-32229- 23	M1		1	
	25-32229-301	M1		1	
	25-32229-303			1	
	25-32230- 1	M1		1	F-273
	25-32230- 7	M1		1	
	25-32230- 9	M1		1	
	25-32230- 11	M1		1	
	25-32230- 13	M1		1	
	25-32230- 15	M1		1	
	25-32230- 17	M1		1	
	25-32230- 19			1	
	25-32231- 1	M1		1	F-274
	25-32231- 3	M1		1	
	25-32231- 7	M1		1	
	25-32231- 9	M1		1	
	25-32231- 11	M1		1	
	25-32231- 13	M1		3	
	25-32231- 15	M1		1	
	25-32231- 17	M1		1	
	25-32232- 1	M1		1	F-275
	25-32232- 3	M1		1	
	25-32232- 5	M1		1	
	25-32233- 1	M1	114 - 33	1	F-276
	25-32233- 3	M1		1	
	25-32233- 5	M1	114 - 37	1	
	25-32233- 7	M1	114 - 36	1	
	25-32233- 11	M1		1	
	25-32233- 13	M1		2	
	25-32233- 15	M1		1	
	25-32233- 17	M1		1	
	25-32233-301	M1	114 - 33	1	
	25-32234- 3	M1		1	F-277
	25-32234- 4	M1		1	
	25-32234- 5	M1		1	
	25-32234- 6	M1		1	
	25-32234- 9	M1		2	
	25-32234- 10	M1		2	
	25-32234- 11	M1		1	
	25-32234- 12	M1		1	
	25-32234- 14	M1		1	
	25-32235- 3	M1		1	B-514
	25-32236- 3	M1	116 -	1	C-519
	25-32236- 4	M1	116 - 8	1	
	25-32237- 1	M1		1	D-357
	25-32237- 2	M1		1	
	25-32237- 3	M1		1	
	25-32237- 4	M1		1	
	25-32237- 5	M1		1	
	25-32237- 6	M1		1	
	25-32240- 1	M1	107 -	1	F-278 F-279
	25-32240- 3	M1		1	
	25-32240- 5	M1		1	
	25-32240- 7	M1		1	
	25-32240- 9	M1		1	
	25-32240- 11	M1		1	
	25-32240- 13	M1		1	
	25-32240- 15	M1		1	
	25-32240- 17	M1		1	
	25-32240- 19	M1		1	
	25-32240- 21	M1		1	
	25-32240- 23	M1		1	
	25-32240- 25	M1		2	
	25-32240- 27	M1		2	
	25-32240- 29	M1		1	
	25-32240- 31	M1		1	
	25-32240- 33	M1		1	
	25-32240- 35	M1		1	
	25-32240- 37	M1		1	
	25-32240- 39	M1		1	
	25-32240- 41	M1		1	
	25-32240- 43	M1		1	
	25-32240- 45	M1		1	
	25-32240- 47	M1		1	
	25-32240- 49	M1		1	
	25-32240- 51	M1		1	
	25-32240- 53	M1		1	
	25-32240- 55	M1		1	
	25-32240- 57	M1		2	
	25-32240- 59	M1		1	
	25-32240- 61	M1		1	
	25-32240- 63	M1		1	
	25-32240- 65	M1		1	
	25-32240- 67	M1		1	
	25-32240- 69	M1		2	
	25-32240- 71	M1		1	
	25-32240- 73	M1		1	
	25-32240- 75	M1		1	
	25-32240- 77	M1		1	
	25-32240- 79	M1		1	
	25-32240- 81	M1		1	
	25-32240- 83	M1		1	
	25-32240- 85	M1		1	
	25-32240- 87			5	
	25-32240- 93			1	
	25-32240- 95			1	
	25-32240- 97			1	
	25-32240- 99			1	
	25-32240-101			1	
	25-32240-301	M1	107 -	1	
	25-32240-303			1	
	25-32243- 3	M1		1	A-268
	25-32244- 1	M1	107 -	1	F-280
	25-32244- 3	M1		1	
	25-32244- 5	M1		1	
	25-32244- 7	M1		1	
	25-32244- 9	M1		1	

STOCK	PART NUMBER	SOURCE CODE	FIGURE & INDEX NO.	QTY. PER A/C	MICROFILM INDEX
	25-32244- 11	M1		1	
	25-32244- 13	M1		1	
	25-32244- 15	M1		1	
	25-32244- 17			1	
	25-32244- 18			1	
	25-32245- 3	M1	113 - 13	1	B-515
	25-32246- 3	M1		1	A-289
	25-32246- 4	M1		1	
	25-32246- 5	M1		1	
	25-32246- 6	M1		1	
	25-32246- 7	M1		1	
	25-32246- 8	M1		1	
	25-32246- 9	M1		1	
	25-32246- 10	M1		1	
	25-32247- 3	M1		1	A-290
	25-32247- 4	M1		1	
	25-32247- 5	M1		1	
	25-32247- 6	M1		1	
	25-32248- 3	M1		2	A-291
	25-32248- 4	M1		2	
	25-32249- 3	M1		1	A-292
	25-32249- 4	M1		1	
	25-32249- 5	M1		1	
	25-32249- 6	M1		1	
	25-32250- 3	M1		1	A-293
	25-32250- 4	M1		1	
	25-32250- 5	M1		1	
	25-32250- 6	M1		1	
	25-32253- 1	M1		1	
	25-32253- 2	M1		1	
	25-32253- 5	M1		4	
	25-32253- 7	M1		4	
	25-32253- 9	M1		2	
	25-32253- 10	M1		2	
	25-32253- 11	M1		2	
	25-32253- 13			1	
	25-32253- 14			1	
	25-32254- 1	M1		2	
	25-32254- 3	M1		2	
	25-32255- 1	M1		1	
	25-32255- 3	M1		1	
	25-32255- 5	M1		1	
	25-32255- 7	M1		1	
	25-32255- 9	M1		1	
R82MDA-	25-32256- 3	P1	113 - 3	1	F-281
	25-32258- 3	M1	112 - 33	2	A-294
	25-32259- 3	M1	112 - 40	2	A-295
	25-32260- 3	M1	112 - 38	2	A-296
	25-32262- 1	M1	112 - 35	2	C-520
	25-32262- 5	M1		3	
	25-32263- 3	M1		1	G-121
	25-32263- 4	M1		1	
	25-32263- 5	M1		1	
	25-32263- 6	M1		1	
	25-32263- 7	M1		1	
	25-32263- 8	M1		1	
	25-32263- 15			1	
	25-32263- 16			1	
	25-32263- 17			1	
	25-32263- 18			1	
	25-32263- 19			1	
	25-32263- 20			1	
	25-32263- 21			1	
	25-32263- 22			1	
	25-32263- 23			1	
	25-32263- 24			1	
R82MDA-	25-32264- 3	P	114 - 3	2	
	25-32265- 1	M1		1	F-283
	25-32265- 3	M1		1	
	25-32265- 5	M1		1	
	25-32265- 7	M1		1	
	25-32265- 9	M1		1	
	25-32265- 11	M1		1	
	25-32266- 1	M1		1	F-284
	25-32266- 3	M1		1	
	25-32266- 5	M1		1	
	25-32266- 7	M1		1	
	25-32266- 8	M1		1	
	25-32266- 9	M1		1	
	25-32266- 11			1	
	25-32266- 13			1	
	25-32266-301			1	
	25-32267- 1	M1		1	F-285
	25-32267- 3	M1		1	
	25-32267- 5	M1		1	
	25-32267- 7	M1		1	
	25-32267- 9	M1		1	
	25-32267- 11	M1		2	
	25-32268- 1	M1	107 - 12	1	
	25-32268- 2	M1	107 - 13	1	
	25-32268- 3	M1		1	
	25-32268- 4	M1		1	
	25-32268- 5	M1		1	
	25-32268- 6	M1		1	
	25-32268- 7	M1		1	
	25-32268- 8	M1		1	
	25-32268- 9	M1		1	
	25-32268- 10	M1		1	
	25-32268- 11	M1		1	
	25-32268- 12	M1		1	
	25-32268- 13	M1		2	
	25-32268- 15	M1		1	
	25-32268- 16	M1		1	
	25-32268- 17	M1		2	
	25-32268- 19	M1		2	
	25-32268- 21	M1		2	
	25-32268- 23	M1		1	
	25-32268- 24	M1		1	
	25-32270- 1	M1		1	C-521
	25-32270- 3	M1		1	
	25-32270- 5	M1		1	
	25-32270- 7	M1		1	
	25-32271- 3	M1		1	B-517
	25-32272- 3	M1		2	B-518
	25-32273- 1	M1		1	D-358
	25-32273- 3	M1		2	
	25-32273- 5			1	
	25-32273- 7			1	
	25-32273- 9	M1		1	
	25-32273- 11	M1		3	
	25-32273- 13	M1		2	
	25-32273- 15			2	
	25-32273- 17			2	
	25-32273-301			2	
	25-32274- 1	M1	108 -	1	G-1
	25-32274- 5	M1		2	
	25-32274- 7	M1		1	
	25-32274- 9	M1		1	
	25-32274- 11	M1		1	
	25-32274- 13	M1		2	
	25-32274- 17			1	
	25-32275- 3	M1		1	G-2
	25-32275- 5	M1		1	
	25-32275- 7	M1		1	
	25-32275- 9	M1		1	
	25-32275- 11	M1		1	
	25-32275- 13	M1		1	
	25-32275- 15	M1		1	
	25-32275- 17	M1		1	
	25-32277- 1	M1		1	G-4
	25-32277- 3	M1		1	
	25-32277- 5	M1		1	
	25-32277- 7	M1		1	
	25-32277- 9	M1		1	
	25-32277- 11			2	
	25-32277- 13			2	
	25-32277- 15			2	
	25-32277- 17			2	
	25-32277- 18			2	
	25-32277- 19			2	
	25-32277- 21			2	
	25-32277- 23			2	
	25-32278- 1	M1		1	G-5
	25-32278- 3	M1		1	
	25-32278- 5	M1		1	
	25-32278- 7	M1		1	
	25-32278- 9	M1		2	
	25-32278- 11	M1		1	
	25-32278- 17	M1		1	
	25-32278- 19	M1		1	
	25-32278- 20	M1		1	
	25-32280- 3	M1		2	G-6
	25-32280- 5	M1		2	
	25-32280- 7	M1		3	
	25-32280- 9	M1		1	
	25-32280- 10	M1		1	
	25-32280- 11	M1		1	
	25-32280- 12	M1		1	
	25-32280- 13	M1		1	
	25-32281- 1	M1		1	C-522
	25-32281- 3	M1		1	
	25-32282- 1	M1		1	G-7
	25-32282- 3	M1		1	
	25-32282- 7	M1		1	
	25-32282- 9	M1		2	
	25-32282- 10	M1		2	
	25-32282- 11	M1		1	
	25-32282- 13	M1		4	
	25-32283- 3	M1		1	C-523
	25-32284- 1	M1		1	G-8
	25-32284- 3	M1		1	
	25-32284- 5	M1		1	
	25-32284- 7	M1		1	
	25-32284- 9	M1		1	
	25-32284- 11	M1		1	
	25-32284- 13	M1		1	
	25-32284- 17	M1		1	
	25-32284- 23			1	
	25-32285- 5	M1		1	C-524
	25-32285- 7	M1		1	
	25-32286- 5	M1		2	B-520
	25-32287- 3	M1		2	A-298

STOCK	PART NUMBER	SOURCE CODE	FIGURE & INDEX NO.	QTY. PER A/C	MICROFILM INDEX
	25-32288- 3	M1		1	A-299
	25-32288- 4	M1		1	
	25-32289- 1	M1		1	C-525
	25-32289- 2	M1		1	
	25-32289- 3	M1		2	
	25-32289- 4	M1		3	
	25-32289- 5	M1		2	
	25-32289- 6	M1		3	
	25-32289- 7	M1		1	
	25-32289- 8	M1		1	
	25-32289- 9	M1		1	
	25-32289- 10	M1		1	
	25-32289- 11	M1		1	
	25-32289- 12	M1		1	
	25-32290- 3	M1	114 - 28	2	A-300
	25-32291- 3	M1		1	A-301
	25-32292- 1	M1		1	XA-222
	25-32292- 3	M1		1	
	25-32292- 4	M1		1	
	25-32292- 9	M1		1	
	25-32292- 13	M1		2	
	25-32292- 15	M1		1	
	25-32292- 17	M1		2	
	25-32293- 1	M1		1	C-526
	25-32293- 3	M1		2	
	25-32293- 5	M1		2	
	25-32293- 7	M1		3	
	25-32293- 9	M1		3	
	25-32293- 11	M1		2	
	25-32293- 13	M1		1	
	25-32294- 7	M1	109 - 94	1	C-527
	25-32294- 13	M1		1	
	25-32294- 15	M1	108 -113	1	
	25-32294- 17	M1	109 - 93	1	
	25-32295- 3	M1		3	B-521
	25-32295- 5	M1	107 - 11	1	
			109 - 95		
	25-32296- 1	M1		1	G-10
	25-32296- 3	M1		1	
	25-32296- 7	M1		1	
	25-32296- 9	M1		1	
	25-32296- 13	M1		1	
	25-32296- 17	M1		1	
	25-32296- 19	M1		1	
	25-32296- 21	M1		1	
	25-32296- 23	M1		1	
	25-32296- 25	M1		1	
	25-32296- 27	M1		1	
	25-32296- 29	M1		1	
	25-32296- 31	M1		1	
	25-32296- 33	M1		1	
	25-32296- 35			1	
	25-32296- 37			1	
	25-32296-301			1	
	25-32297- 3	M1	108 - 49	16	A-302
			108 -101		
			109 - 49		
			109 - 88		
	25-32297- 5	M1	108 -102	40	
			109 - 89		
	25-32298- 3	M1	107 - 18	1	
	25-32301- 1	M1		1	B-522
	25-32301- 3	M1		1	
	25-32301- 5	M1		1	
	25-32302- 1	M1		1	G-12
	25-32302- 5			1	
	25-32303- 1	M1		1	C-528
	25-32303- 3	M1		1	
	25-32304- 3	M1		1	C-529
	25-32305- 1	M1		2	C-530
	25-32305- 3	M1		2	
	25-32305- 5	M1		2	
	25-32305- 7	M1		2	
	25-32306- 3	M1		2	A-304
	25-32307- 3F	X1		4	B-523
	25-32308- 3F	X1		4	B-524
	25-32309- 3	X2	108 - 25	1	B-525
	25-32309- 4	X2	109 - 25	1	
	25-32310- 1	X2	108 - 26	1	
	25-32310- 2	X2	109 - 26	1	B-526
	25-32310- 3	X1		1	
	25-32310- 4	X1		1	
	25-32311- 1	M1		1	C-531
	25-32311- 3	M1		1	
	25-32314- 3	M1	107 - 26	6	B-527
			107 - 27		
	25-32314- 5	M1	107 - 26	2	
	25-32315- 1	M1		1	
	25-32315- 3	M1		1	
	25-32317- 1	M1		1	
	25-32317- 3	M1		1	
	25-32318- 3	M1		8	
	25-32318- 4	M1		8	
	25-32318- 5	M1		2	
	25-32318- 6	M1		2	
	25-32318- 7	M1		2	
	25-32318- 8	M1		2	
	25-32318- 9	M1		2	
	25-32318- 10	M1		2	
	25-32318- 11	M1		2	
	25-32318- 12	M1		2	
	25-32319- 3		111 - 1	210	
			111 - 5		
			111 - 6		
			111 - 7		
			111 - 14		
			111 - 15		
			111 - 16		
			111 - 20		
			111 - 21		
			112 - 2		
			112 - 3		
			112 - 4		
			112 - 5		
			112 - 18		
			112 - 19		
			112 - 20		
			112 - 21		
			112 - 22		
			112 - 23		
			112 - 24		
			112 - 25		
			112 - 26		
			112 - 27		
			112 - 28		
			112 - 29		
			112 - 30		
			112 - 31		
			138 - 34		
			138 - 35		
			138 - 36		
			138 - 37		
			138 - 41		
			138 - 42		
			138 - 43		
	25-32320- 1	M1	107 - 21	1	
	25-32320- 3	M1		1	
	25-32320- 5	M1	107 - 24	1	
	25-32323- 1			1	
	25-32323- 2			1	
	25-32323- 3			1	
	25-32323- 4			1	
	25-32323- 5			2	
	25-32323- 7			1	
	25-32323- 8			1	
	25-32323- 9			1	
	25-32323- 10			1	
	25-32323- 11			1	
	25-32323- 12			1	
	25-32323- 13			2	
	25-32323- 14			2	
	25-32323- 15			1	
	25-32323- 16			1	
	25-32323- 17			1	
	25-32323- 18			1	
	25-32324- 1		108 -	1	
	25-32324- 2		109 -	1	
	25-32324- 12			1	
	25-32324- 14			1	
	25-32324- 15			1	
	25-32324- 16			1	
	25-32324- 17			1	
	25-32324- 18			1	
	25-32324- 19			1	
	25-32324- 20			1	
	25-32324- 21			1	
	25-32324- 22			1	
	25-32324- 23			2	
	25-32324- 24			2	
	25-32324- 25		108 - 32	1	
	25-32324- 26		109 - 32	1	
	25-32325- 1			1	
	25-32325- 3			1	
	25-32325- 5			1	
	25-32325- 7			1	
	25-32325- 9			1	
	25-32325- 13			1	
	25-32325- 15			1	
	25-32325- 19			1	
	25-32325- 21			1	
	25-32325- 23			1	
	25-32325- 25			1	
	25-32325- 27			1	
	25-32325- 28			1	
	25-32325- 29			1	
	25-32325- 31			1	
	25-32325- 33			1	
	25-32325- 35			1	
	25-32325- 37			1	
	25-32325- 39			1	
	25-32325- 41			1	
	25-32325- 43			1	

STOCK	PART NUMBER	SOURCE CODE	FIGURE & INDEX NO.	QTY. PER A/C	MICROFILM INDEX
	25-32325- 45			1	
	25-32325- 47			1	
	25-32325- 49			1	
	25-32325- 51			1	
	25-32325- 53			1	
	25-32325- 55			1	
	25-32325- 57			1	
	25-32325- 59			1	
	25-32325- 61			1	
	25-32325- 63			1	
	25-32325- 65			2	
	25-32325- 67			1	
	25-32325- 69			1	
	25-32325- 71			1	
	25-32325- 73			1	
	25-32325- 75			2	
	25-32325- 77			2	
	25-32325- 79			1	
	25-32325- 81			1	
	25-32325- 83			1	
	25-32325- 85			1	
	25-32325- 87			1	
	25-32325- 89			2	
	25-32325- 91			1	
	25-32325- 93			2	
	25-32325- 95			1	
	25-32325- 97			2	
	25-32325- 99			1	
	25-32325-101			1	
	25-32325-103			1	
	25-32325-105			1	
	25-32325-107			1	
	25-32325-109			1	
	25-32325-111			2	
	25-32325-113			1	
	25-32325-115			1	
	25-32325-117			2	
	25-32325-119			1	
	25-32325-120			1	
	25-32326- 3			1	
	25-32326- 5			1	
	25-32327- 1			1	
	25-32327- 2			1	
	25-32327- 3			1	
	25-32327- 4			1	
	25-32327- 5			2	
	25-32328- 1		108 - 41	4	
	25-32328- 2		109 - 39	3	
	25-32328- 7			2	
	25-32328- 8			2	
	25-32328- 9			2	
	25-32328- 10			2	
	25-32330- 3			1	
	25-32331- 1			1	
	25-32331- 2			1	
	25-32331- 3			1	
	25-32331- 4			1	
	25-32331- 5			1	
	25-32331- 6			1	
	25-32331- 7			1	
	25-32331- 8			1	
	25-32332- 1			1	
	25-32332- 2			1	
	25-32332- 9			2	
	25-32332- 11			1	
	25-32332- 12			1	
	25-32332- 13			2	
	25-32332- 15			1	
	25-32332- 17			1	
	25-32332- 19			1	
	25-32332- 21			2	
	25-32332- 23			1	
	25-32332- 24			1	
	25-32332- 25			2	
	25-32333- 3			9	
	25-32334- 1			3	
	25-32334- 3			3	
	25-32352- 1			1	
	25-33000- 1	*	138 -	1	G-14
	25-33000-301			1	
	25-33000-303		138 -	1	
	25-33001-301	X	138 -	1	G-15
	25-33001-303			1	
	25-33001-305		138 -	1	
	25-33001-307		138 -	1	
	25-33002- 5	M1		1	G-16
	25-33002- 7	M1		1	
	25-33002- 9	M1		1	
	25-33002- 11	M1		2	
	25-33002- 13	M1		2	
	25-33002- 15	M1		2	
	25-33002- 17	M1		2	
	25-33002- 19	M1		1	
	25-33002- 20	M1		1	
	25-33002- 27			1	
	25-33002- 28			1	

STOCK	PART NUMBER	SOURCE CODE	FIGURE & INDEX NO.	QTY. PER A/C	MICROFILM INDEX
	25-33002- 31			2	
	25-33002-301	M1	138 - 1 139 -	1	
	25-33002-303	M1	138 - 1 139 -	1	
	25-33002-305		138 - 1 139 -	1	
	25-33002-603			2	
	25-33003- 3	M1		1	G-17 D-359
	25-33003- 5	M1		1	
	25-33003- 7	M1		1	
	25-33003- 8	M1		1	
	25-33003- 13	M1		1	
	25-33003- 15	M1		1	
	25-33003- 17	M1		1	
	25-33003- 18	M1		1	
	25-33003- 19	M1		2	
	25-33003- 21			1	
	25-33003- 22			1	
	25-33003-301			1	
	25-33004- 1	M1		1	D-360 G-18
	25-33004- 3	M1		1	
	25-33004- 7	M1		1	
	25-33004- 9	M1		1	
	25-33004- 11	M1		1	
	25-33004- 13	M1		1	
	25-33004- 14	M1		1	
	25-33004- 15	M1		1	
	25-33004- 17	M1		1	
	25-33004- 19	M1		1	
	25-33004- 21	M1		1	
	25-33004- 22	M1		1	
	25-33004- 23	M1		1	
	25-33004- 25	M1		1	
	25-33004- 27	M1		1	
	25-33004- 29	M1		1	
	25-33004- 31	M1		2	
	25-33004- 35	M1		1	
	25-33004- 37	M1		1	
	25-33004- 38	M1		1	
	25-33004- 39	M1		2	
	25-33004- 41	M1		1	
	25-33004- 42	M1		1	
	25-33004- 43	M1		1	
	25-33004- 45	M1		1	
	25-33004- 46	M1		1	
	25-33004- 47	M1		2	
	25-33004- 49	M1		1	
	25-33004- 50	M1		1	
	25-33004- 51	M1		2	
	25-33004- 53	M1		1	
	25-33004- 54	M1		1	
	25-33004- 55	M1		1	
	25-33004- 56	M1		1	
	25-33004- 61	M1		1	
	25-33004- 62	M1		1	
	25-33004- 67	M1		1	
	25-33004- 69	M1		1	
	25-33004- 71	M1		1	
	25-33004- 73	M1		1	
	25-33004- 75	M1		1	
	25-33004- 77	M1		1	
	25-33004- 79	M1		1	
	25-33004- 81	M1		1	
	25-33004- 83	M1		1	
	25-33004- 84	M1		1	
	25-33004- 85	M1		1	
	25-33004- 86	M1		1	
	25-33004- 87	M1		1	
	25-33004- 89	M1		1	
	25-33004- 90	M1		1	
	25-33004- 91	M1		1	
	25-33004- 93	M1		1	
	25-33004- 94	M1		1	
	25-33004- 95	M1		1	
	25-33004- 96	M1		1	
	25-33004- 97	M1		1	
	25-33004- 98	M1		1	
	25-33004- 99	M1		1	
	25-33004-100	M1		1	
	25-33004-101	M1		2	
	25-33004-103	M1		1	
	25-33004-109	M1		1	
	25-33004-111	M1		1	
	25-33004-113	M1		1	
	25-33004-115	M1		1	
	25-33004-116	M1		1	
	25-33004-117	M1		1	
	25-33004-119	M1		1	
	25-33004-121	M1		1	
	25-33004-123	M1		1	
	25-33004-125			1	
	25-33004-127			1	
	25-33004-301	M1		1	
	25-33004-303			1	
	25-33005- 1	M1		1	D-361 D-362

STOCK	PART NUMBER	SOURCE CODE	FIGURE & INDEX NO.	QTY. PER A/C	MICROFILM INDEX
	25-33005- 1				D-369
	25-33005- 3	M1		1	
	25-33005- 5	M1		1	
	25-33005- 7	M1		1	
	25-33005- 8	M1		1	
	25-33005- 9	M1		1	
	25-33005- 10	M1		1	
	25-33005- 11	M1		1	
	25-33005- 13	M1		1	
	25-33005- 15	M1		1	
	25-33005- 16	M1		1	
	25-33005- 17	M1		1	
	25-33005- 19	M1		1	
	25-33005- 23	M1		1	
	25-33005- 24	M1		1	
	25-33005- 25	M1		1	
	25-33005- 29	M1		1	
	25-33005- 30	M1		1	
	25-33005- 35	M1		2	
	25-33005- 37	M1		1	
	25-33005- 38	M1		1	
	25-33005- 39	M1		1	
	25-33005- 41	M1		1	
	25-33005- 42	M1		1	
	25-33005- 43	M1		1	
	25-33005- 45	M1		2	
	25-33005- 47	M1		1	
	25-33005- 48	M1		1	
	25-33005- 51	M1		1	
	25-33005- 52	M1		1	
	25-33005- 55	M1		1	
	25-33005- 57	M1		1	
	25-33005- 58	M1		1	
	25-33005- 59	M1		1	
	25-33005- 60	M1		1	
	25-33005- 61	M1		1	
	25-33005- 62	M1		1	
	25-33005- 65	M1		1	
	25-33005- 67	M1		1	
	25-33005- 71	M1		1	
	25-33005- 72	M1		1	
	25-33005- 73	M1		1	
	25-33005- 74	M1		1	
	25-33005- 75	M1		1	
	25-33005- 76	M1		1	
	25-33005- 77	M1		1	
	25-33005- 78	M1		1	
	25-33005- 79	M1		1	
	25-33005- 80	M1		1	
	25-33005- 81	M1		1	
	25-33005- 82	M1		1	
	25-33005- 83	M1		1	
	25-33005- 85	M1		1	
	25-33005- 86	M1		1	
	25-33005- 87	M1		1	
	25-33005- 88	M1		1	
	25-33005- 89	M1		1	
	25-33005- 91	M1		1	
	25-33005- 93	M1		1	
	25-33005- 95	M1		1	
	25-33005- 97	M1		1	
	25-33005- 99	M1		1	
	25-33005-101	M1		1	
	25-33005-103	M1		1	
	25-33005-105	M1		1	
	25-33005-107	M1		1	
	25-33005-109	M1		1	
	25-33005-111	M1		1	
	25-33005-112	M1		1	
	25-33005-113	M1		1	
	25-33005-114	M1		1	
	25-33005-115	M1		1	
	25-33005-117	M1		1	
	25-33005-119	M1		1	
	25-33005-121	M1		1	
	25-33005-123	M1		1	
	25-33005-125	M1		2	
	25-33005-127	M1		1	
	25-33005-128	M1		1	
	25-33005-129	M1		1	
	25-33005-131	M1		1	
	25-33005-133	M1		1	
	25-33005-134	M1		1	
	25-33005-135	M1		1	
	25-33005-136	M1		1	
	25-33005-137	M1		1	
	25-33005-139	M1		1	
	25-33005-141	M1		1	
	25-33005-143	M1		1	
	25-33005-145	M1		1	
	25-33005-147	M1		1	
	25-33005-148	M1		1	
	25-33005-149	M1		1	
	25-33005-151			1	
	25-33005-301	M1		1	
	25-33005-303	M1		1	

STOCK	PART NUMBER	SOURCE CODE	FIGURE & INDEX NO.	QTY. PER A/C	MICROFILM INDEX
	25-33005-305			1	
	25-33006- 1	M1		1	D-364 G-20
	25-33006- 3	M1		1	
	25-33006- 5	M1		1	
	25-33006- 7	M1		1	
	25-33006- 9	M1		2	
	25-33006- 11	M1		1	
	25-33006- 13	M1		1	
	25-33006- 15	M1		1	
	25-33006- 16	M1		1	
	25-33006- 19	M1		2	
	25-33006- 21	M1		1	
	25-33006- 22	M1		1	
	25-33006- 23	M1		1	
	25-33006- 25	M1		1	
	25-33006- 26	M1		1	
	25-33006- 27	M1		1	
	25-33006- 28	M1		1	
	25-33006- 31	M1		1	
	25-33006- 32	M1		1	
	25-33006- 33	M1		2	
	25-33006- 37	M1		1	
	25-33006- 38	M1		1	
	25-33006- 41	M1		1	
	25-33006- 42	M1		1	
	25-33006- 43	M1		2	
	25-33006- 45	M1		1	
	25-33006- 46	M1		1	
	25-33006- 47	M1		1	
	25-33006- 48	M1		1	
	25-33006- 49	M1		1	
	25-33006- 50	M1		1	
	25-33006- 51	M1		1	
	25-33006- 55	M1		1	
	25-33006- 56	M1		1	
	25-33006- 57	M1		1	
	25-33006- 59	M1		2	
	25-33006- 61	M1		1	
	25-33006- 63	M1		1	
	25-33006- 65	M1		1	
	25-33006- 67	M1		2	
	25-33006- 69	M1		4	
	25-33006- 71	M1		1	
	25-33006- 73	M1		1	
	25-33006- 75	M1		1	
	25-33006- 79	M1		1	
	25-33006- 83	M1		1	
	25-33006- 85	M1		2	
	25-33006- 87	M1		1	
	25-33006- 88	M1		1	
	25-33006- 89	M1		1	
	25-33006- 90	M1		1	
	25-33006- 91	M1		1	
	25-33006- 92	M1		1	
	25-33006- 93	M1		1	
	25-33006- 94	M1		1	
	25-33006- 95	M1		1	
	25-33006- 96	M1		1	
	25-33006- 97	M1		1	
	25-33006-101	M1		1	
	25-33006-103	M1		1	
	25-33006-104	M1		1	
	25-33006-109	M1		1	
	25-33006-110	M1		1	
	25-33006-111	M1		1	
	25-33006-112	M1		1	
	25-33006-113	M1		2	
	25-33006-115	M1		1	
	25-33006-117	M1		1	
	25-33006-119	M1		1	
	25-33006-120	M1		1	
	25-33006-121	M1		1	
	25-33006-123	M1		1	
	25-33006-124	M1		1	
	25-33006-125	M1		1	
	25-33006-127			1	
	25-33006-129			1	
	25-33006-131			1	
	25-33006-133			1	
	25-33006-135			1	
	25-33006-136			1	
	25-33006-137			1	
	25-33006-301			1	
	25-33007- 1	M1		1	D-365 D-366
	25-33007- 3		139 -	1	
	25-33007- 5	M1		2	
	25-33007- 7	M1		1	
	25-33007- 9	M1		1	
	25-33007- 11	M1		1	
	25-33007- 17	M1		1	
	25-33007- 19	M1		1	
	25-33007- 20	M1		1	
	25-33007- 25	M1		1	
	25-33007- 26	M1		1	
	25-33007- 27	M1		1	
	25-33007- 28	M1		1	

STOCK	PART NUMBER	SOURCE CODE	FIGURE & INDEX NO.	QTY. PER A/C	MICROFILM INDEX
	25-33007- 35	M1		1	
	25-33007- 36	M1		1	
	25-33007- 37	M1		1	
	25-33007- 41	M1		1	
	25-33007- 43	M1		1	
	25-33007- 45	M1		1	
	25-33007- 47	M1		1	
	25-33007- 49	M1		1	
	25-33007- 50	M1		1	
	25-33007- 51	M1		1	
	25-33007- 52	M1		1	
	25-33007- 53	M1		1	
	25-33007- 55	M1		1	
	25-33007- 56	M1		1	
	25-33007- 59	M1		1	
	25-33007- 60	M1		1	
	25-33007- 61	M1		1	
	25-33007- 62	M1		1	
	25-33007- 63	M1		1	
	25-33007- 64	M1		1	
	25-33007- 65	M1		1	
	25-33007- 66	M1		1	
	25-33007- 67	M1		2	
	25-33007- 71	M1		1	
	25-33007- 79	M1		1	
	25-33007- 81	M1		1	
	25-33007- 83	M1		1	
	25-33007- 84	M1		1	
	25-33007- 85	M1		1	
	25-33007- 87	M1		1	
	25-33007- 89	M1		1	
	25-33007- 91	M1		1	
	25-33007- 93	M1		1	
	25-33007- 94	M1		1	
	25-33007- 97	M1		1	
	25-33007-101	M1		1	
	25-33007-102	M1		1	
	25-33007-103	M1		1	
	25-33007-104	M1		1	
	25-33007-105	M1		1	
	25-33007-106	M1		1	
	25-33007-107	M1		1	
	25-33007-108	M1		1	
	25-33007-109	M1		1	
	25-33007-111	M1		1	
	25-33007-112	M1		1	
	25-33007-113	M1		1	
	25-33007-114	M1		1	
	25-33007-115	M1		1	
	25-33007-116	M1		1	
	25-33007-119	M1		1	
	25-33007-121	M1		1	
	25-33007-123			1	
	25-33007-125			1	
	25-33007-127			1	
	25-33007-128			1	
	25-33007-129			1	
	25-33007-131			1	
	25-33007-132			1	
	25-33007-133			2	
	25-33007-136			1	
	25-33007-137			1	
	25-33007-301			1	
	25-33008- 1		141 -	1	
	25-33008- 2		141 -	1	
	25-33008- 5	M1		1	G-48
	25-33008- 6	M1		1	
	25-33008- 7	M1		1	
	25-33008- 8	M1		1	
	25-33008- 9	M1		1	
	25-33008- 10	M1		1	
	25-33009- 3		141 - 39	1	
	25-33009- 3F	X1		2	G-21
	25-33009- 4		141 - 38	1	
	25-33009- 4F	X1		2	
R82MDA-	25-33009- 5		141 - 39	1	
R82MDA-	25-33009- 6		141 - 38	1	
	25-33010- 1	M1		1	G-22
	25-33010- 3	M1		1	
	25-33010- 5	M1		1	
	25-33010- 7	M1		1	
	25-33010- 8	M1		1	
	25-33010- 9	M1		1	
	25-33010- 11	M1		1	
	25-33010- 13	M1		1	
	25-33010- 15	M1		1	
	25-33010- 17	M1		1	
	25-33010-301	M1		1	
	25-33011- 1	M1		1	G-23
	25-33011- 2	M1		1	
	25-33011- 3	M1		1	
	25-33011- 4	M1		1	
	25-33011- 5	M1		1	
	25-33011- 6	M1		1	
	25-33011- 7	M1		1	
	25-33011- 8	M1		1	

STOCK	PART NUMBER	SOURCE CODE	FIGURE & INDEX NO.	QTY. PER A/C	MICROFILM INDEX
	25-33011- 11	M1		2	
	25-33011- 13	M1		2	
	25-33011- 15	M1		2	
	25-33011- 16	M1		4	
	25-33011- 17	M1		1	
	25-33011- 18	M1		1	
	25-33011- 19	M1		2	
	25-33011- 21	M1		1	
	25-33011- 22	M1		1	
	25-33011-301	M1		1	
	25-33011-302	M1		1	
	25-33012- 1	M1		1	
	25-33012- 2	M1		1	
	25-33012- 3	M1		1	
	25-33012- 4	M1		1	
	25-33012- 5	M1		1	
	25-33012- 6	M1		1	
	25-33012- 7	M1		1	
	25-33012- 8	M1		1	
	25-33012- 13	M1		1	
	25-33012- 14	M1		1	
	25-33012- 15	M1		2	
	25-33014- 1	M1		1	XA-223
	25-33014- 17	M1		1	
	25-33014- 19	M1		1	
	25-33014- 25	M1		1	
	25-33014- 29	M1		1	
	25-33014- 31	M1		1	
	25-33014- 33	M1		1	
	25-33014- 37	M1		1	
	25-33014- 39	M1		1	
	25-33014- 40	M1		1	
	25-33014- 41	M1		1	
	25-33014- 43	M1		1	
	25-33014- 45	M1		2	
	25-33014- 47	M1		1	
	25-33014- 49	M1		1	
	25-33014- 50	M1		1	
	25-33014- 51	M1		1	
	25-33014- 53	M1		1	
	25-33014- 55	M1		1	
	25-33014- 57	M1		1	
	25-33014- 59	M1		1	
	25-33014- 61	M1		1	
	25-33014- 63	M1		1	
	25-33014- 65	M1		1	
	25-33014- 67	M1		1	
	25-33014- 69	M1		1	
	25-33014- 71	M1		1	
	25-33014- 73	M1		1	
	25-33014- 75	M1		1	
	25-33014- 77			1	
	25-33014- 81			1	
	25-33014- 83			1	
	25-33014- 85			1	
	25-33014- 87			1	
	25-33014- 89			1	
	25-33014- 91			1	
	25-33014- 93			1	
	25-33014- 95			1	
	25-33014- 97			1	
	25-33014-301			1	
	25-33015- 5	M1		1	G-26
	25-33015- 13	M1		1	
	25-33015- 17	M1		1	
	25-33015- 19	M1		1	
	25-33015- 21	M1		1	
	25-33015- 22	M1		1	
	25-33015- 23	M1		1	
	25-33015- 27	M1		1	
	25-33015- 29	M1		1	
	25-33015- 33	M1		1	
	25-33015- 35	M1		1	
	25-33015- 37	M1		1	
	25-33015- 43	M1		1	
	25-33015- 44	M1		1	
	25-33015- 53	M1		1	
	25-33015- 57	M1		1	
	25-33015- 61	M1		1	
	25-33015- 63	M1		1	
	25-33015- 65			1	
	25-33015- 67			1	
	25-33015- 68			1	
	25-33015- 69			1	
	25-33015- 70			1	
	25-33015- 71			1	
	25-33015- 73			1	
	25-33015- 75			1	
	25-33015- 77			1	
	25-33015- 79			2	
	25-33015- 81			1	
	25-33015- 83			1	
	25-33015- 85			1	
	25-33015- 87			1	
	25-33015- 89			1	
	25-33015- 91			1	

STOCK	PART NUMBER	SOURCE CODE	FIGURE & INDEX NO.	QTY. PER A/C	MICROFILM INDEX
	25-33015- 93			1	
	25-33015- 95			1	
	25-33015- 97			1	
	25-33015-301			1	
	25-33015-303			1	
	25-33016- 1	M1		1	G-27
	25-33016- 3	M1		1	
	25-33016- 5	M1		1	
	25-33016- 7	M1		1	
	25-33016- 9	M1		1	
	25-33016- 10	M1		1	
	25-33016- 15	M1		1	
	25-33016- 17	M1		1	
	25-33016- 21	M1		1	
	25-33016- 23	M1		1	
	25-33016- 25	M1		1	
	25-33016- 27	M1		1	
	25-33016- 29	M1		1	
	25-33016- 31	M1		1	
	25-33016- 33	M1		1	
	25-33016- 35	M1		1	
	25-33016- 37	M1		1	
	25-33016- 39	M1		1	
	25-33016- 41	M1		1	
	25-33016- 43	M1		1	
	25-33016- 45	M1		1	
	25-33016- 46	M1		1	
	25-33016- 47	M1		1	
	25-33016- 49	M1		1	
	25-33016- 51	M1		1	
	25-33016- 53	M1		1	
	25-33016- 55			1	
	25-33016- 57			1	
	25-33017- 1		140 -	1	XA-224
	25-33017- 29	M1		2	
	25-33017- 31	M1		1	
	25-33017- 32	M1		1	
	25-33017- 37	M1		1	
	25-33017- 39	M1		1	
	25-33017- 41	M1		1	
	25-33017- 43	M1		2	
	25-33017- 45	M1		2	
	25-33017- 47	M1		2	
	25-33017- 49	M1		1	
	25-33017- 63	M1		1	
	25-33017- 65	M1		1	
	25-33017- 89			1	
	25-33017- 91			1	
	25-33017- 93			1	
	25-33017- 95			1	
	25-33017- 97			1	
	25-33017- 99			1	
	25-33017-101			1	
	25-33017-103			1	
	25-33017-105			1	
	25-33017-107			1	
	25-33017-109			1	
	25-33017-111			1	
	25-33017-113			1	
	25-33017-115			1	
	25-33017-117			1	
	25-33017-119			1	
	25-33017-121			1	
	25-33017-123			1	
	25-33017-125			1	
	25-33017-127			1	
	25-33017-129			1	
	25-33017-131			1	
	25-33017-133			1	
	25-33017-135			1	
	25-33017-137			1	
	25-33017-139			1	
	25-33017-141			1	
	25-33017-143			1	
	25-33017-145			1	
	25-33017-146			1	
	25-33017-147			1	
	25-33017-148			1	
	25-33017-149			1	
	25-33017-151			1	
	25-33017-153			1	
	25-33017-155			1	
	25-33018- 1		140 -	1	G-29
	25-33018- 7	M1		1	
	25-33018- 9	M1		1	
	25-33018- 11	M1		1	
	25-33018- 13	M1		1	
	25-33018- 15	M1		1	
	25-33018- 17	M1		1	
	25-33018- 19	M1		2	
	25-33018- 21	M1		1	
	25-33018- 23	M1		2	
	25-33018- 27	M1		3	
	25-33018- 33			1	
	25-33018- 35			1	
	25-33018- 37			1	
	25-33018- 39			1	
	25-33018- 41			1	
	25-33018- 43			1	
	25-33018- 45			1	
	25-33018-301		140 -	1	
	25-33018-603			1	
R82MDA-	25-33020- 1		141 - 43	1	
R82MDA-	25-33020- 2		141 - 44	1	
	25-33020- 3	X1		1	G-30
	25-33020- 4	X1		1	
	25-33021- 1	M1		1	G-31 G-32
	25-33021- 3	M1		1	
	25-33021- 5	M1		2	
	25-33021- 7	M1		1	
	25-33021- 8	M1		1	
	25-33021- 11	M1		1	
	25-33021- 12	M1		1	
	25-33021- 15	M1		1	
	25-33021- 17	M1		1	
	25-33021- 19			1	
	25-33021- 20			1	
	25-33021- 21			1	
	25-33021- 22			1	
	25-33021- 23			1	
	25-33021-301			1	
	25-33021-303			1	
	25-33022- 1		141 -	1	G-33 G-34
	25-33022- 2	M1	141 -	1	
	25-33022- 3	X1	141 - 1	1	
	25-33022- 4	M1	141 - 2	1	
	25-33022- 5	M1		1	
	25-33022- 6	M1		1	
	25-33022- 7	M1		2	
	25-33022- 9	M1		1	
	25-33022- 10	M1		1	
	25-33023- 3	M1	141 - 53	1	
	25-33023- 4	M1	141 - 54	1	
	25-33024- 1	M1		1	G-36
	25-33024- 5	M1		3	
	25-33024- 7	M1		1	
	25-33024- 13			2	
	25-33024- 19	M1		1	
	25-33024- 21	M1		1	
	25-33024- 23	M1		1	
	25-33024- 25			1	
	25-33024-301	M1		1	
	25-33025- 5	X2	140 - 61	1	
	25-33026- 5	X2		1	G-38
	25-33027- 3	X2	139 - 4	1	C-533
	25-33027- 3F	X1		1	
	25-33028- 5	M1		2	G-39
	25-33028- 9	M1		1	
	25-33028- 11	M1		2	
	25-33028- 13	M1		1	
	25-33028- 15	M1		1	
	25-33028- 25	X1		2	
	25-33028- 26	X1		2	
	25-33028- 27	X1		1	
	25-33028- 28			1	
	25-33028-301	X2	140 - 39	1	
	25-33028-302	X2	140 - 40	1	
	25-33028-303	X2	140 - 39	1	
	25-33028-304	X2	140 - 40	1	
	25-33029- 5	M1	141 - 4	2	
	25-33030- 1	M1		1	G-40
	25-33030- 3	M1		1	
	25-33030- 7	M1		1	
	25-33030- 9	M1		2	
	25-33030- 15	M1		2	
	25-33030- 19	M1		2	
	25-33030- 21	M1		1	
	25-33030- 23	M1		1	
	25-33030- 25	M1		1	
	25-33031- 1	X2	141 - 10	1	G-41
	25-33031- 2	X2	141 - 11	1	
	25-33031- 3	X1		1	
	25-33031- 4	X1		1	
	25-33033- 1	M1		1	G-42
	25-33033- 3	M1		1	
	25-33033- 5	M1		2	
	25-33033- 9	M1		1	
	25-33033- 11	M1		1	
	25-33033- 13	M1		1	
	25-33033- 19	M1		1	
	25-33033- 23	M1		1	
	25-33033- 31	M1		1	
	25-33033- 33	M1		1	
	25-33033- 35	M1		1	
	25-33033- 37	M1		1	
	25-33033- 39	M1		1	
	25-33033- 41	M1		1	
	25-33033- 43	M1		1	
	25-33035- 1	M1		1	G-43
	25-33035- 5	M1		1	
	25-33035- 9			1	
	25-33035- 11			1	

STOCK	PART NUMBER	SOURCE CODE	FIGURE & INDEX NO.	QTY. PER A/C	MICROFILM INDEX
	25-33035- 13			1	
	25-33036- 1	M1		1	G-44
	25-33036- 3	M1		1	
	25-33036- 5	M1		1	
	25-33036- 7	M1		1	
	25-33036- 9	M1		1	
	25-33036- 11	M1		1	
	25-33036- 17	M1		1	
	25-33036- 19	M1		1	
	25-33036- 23			1	
	25-33036- 25			2	
	25-33036- 27			2	
	25-33037- 1	M1		1	G-45
	25-33037- 3	M1		1	
	25-33037- 5	M1		1	
	25-33037- 7	M1		1	
	25-33037- 9	M1		1	
	25-33037- 11	M1		1	
	25-33037- 13	M1		1	
	25-33037- 15	M1		1	
	25-33037- 17	M1		1	
	25-33037- 19	M1		1	
	25-33037- 21	M1		2	
	25-33037- 22	M1		1	
	25-33037- 23	M1		1	
	25-33037- 25	M1		1	
	25-33037- 27	M1		1	
	25-33037- 29	M1		1	
	25-33037-301	M1		1	
	25-33039- 1	M1		1	G-46
	25-33039- 3	M1		2	
	25-33039- 5	M1		2	
	25-33039- 7	M1		2	
	25-33039- 11	M1		1	
	25-33039- 13	M1		1	
	25-33039- 15	M1		2	
	25-33039- 17	M1		1	
	25-33039- 21	M1		1	
	25-33039- 23	M1		2	
	25-33039- 29	M1		1	
	25-33039- 31	M1		1	
	25-33039- 33	M1		1	
	25-33039- 35	M1		1	
	25-33039- 37	M1		1	
	25-33039- 39	M1		2	
	25-33039- 41	M1		2	
	25-33039- 43	M1		2	
	25-33039- 45	M1		2	
	25-33039-301	M1		1	
	25-33040- 1		142 - 1	1	
	25-33040- 3			1	
	25-33040- 5			2	
	25-33040- 7			1	
	25-33040- 9			1	
	25-33040- 11			1	
	25-33040- 12			1	
	25-33040- 13			1	
	25-33040- 14			1	
	25-33040- 15			1	
	25-33040- 16			1	
	25-33040- 17			1	
	25-33040- 18			1	
	25-33040- 19			1	
	25-33040- 20			1	
	25-33040- 21			1	
	25-33040- 23			1	
	25-33040- 25			1	
	25-33040- 27			1	
	25-33040- 29			1	
	25-33040- 30			1	
	25-33040- 31			2	
	25-33040- 33			1	
	25-33040- 35			2	
	25-33040- 37			1	
	25-33040- 39			2	
	25-33040- 41			1	
	25-33040- 42			1	
	25-33040- 43			1	
	25-33040- 45			1	
	25-33040- 47			2	
	25-33040- 49			1	
	25-33040- 50			1	
	25-33040- 51			2	
	25-33040- 53			1	
	25-33040- 54			1	
	25-33040- 55			1	
	25-33040- 57			1	
	25-33040- 58			1	
	25-33040- 59			1	
	25-33040- 60			1	
	25-33040- 61			1	
	25-33040- 63			1	
	25-33040- 65			1	
	25-33040- 67			1	
	25-33040- 69			2	
	25-33040- 71			2	
	25-33040- 73			1	
	25-33040- 75			2	
	25-33040- 77			1	
	25-33040- 78			1	
	25-33040- 79			2	
	25-33040- 81			1	
	25-33040- 82			1	
	25-33040- 83			1	
	25-33040- 84			1	
	25-33040- 85			1	
	25-33040- 86			1	
	25-33040- 87			1	
	25-33040- 88			1	
	25-33040- 89			1	
	25-33040- 91			1	
	25-33041- 5	M1		1	G-47
	25-33041- 7	M1		1	
	25-33041- 9	M1		1	
	25-33041- 11	M1		1	
	25-33041- 13			1	
	25-33041- 15	M1		1	
	25-33041- 17	M1		1	
	25-33041- 21	M1		1	
	25-33041- 23	M1		1	
	25-33041- 25	M1		1	
	25-33041- 27	M1		1	
	25-33041- 29	M1		1	
	25-33041- 31	M1		1	
	25-33041- 33	M1		1	
	25-33041- 35	M1		1	
	25-33041- 43	M1		1	
	25-33041- 45	M1		1	
	25-33041- 47	M1		1	
	25-33041- 51			1	
	25-33041- 53			1	
	25-33041- 55			1	
	25-33041- 57			1	
	25-33041-301	M1	140 -	1	
	25-33041-303	M1	140 -	1	
	25-33043- 1	M1	140 -	1	G-49
	25-33043- 3	M1		1	
	25-33043- 9	M1		1	
	25-33043- 11	M1		1	
	25-33043- 13	M1		1	
	25-33043-301	M1	140 -	1	
	25-33044- 3	M1		1	G-50
	25-33044- 4	M1		1	
	25-33044- 5	M1		1	
	25-33044- 7	M1		2	
	25-33044- 9	M1		1	
	25-33044- 10	M1		1	
	25-33044- 11	M1		1	
	25-33044- 13	M1		1	
	25-33044- 15	M1		1	
	25-33044- 16	M1		1	
	25-33044- 19	M1		1	
	25-33044- 21	M1		1	
R82MDA-	25-33046- 1	P1	141 - 9	1	G-51
	25-33046- 3	X1		1	
	25-33047- 11	M1		1	G-52 THRU G-94
	25-33047- 15	M1		1	
	25-33047- 17	M1		1	
	25-33047- 19	M1		2	
	25-33047- 21	M1		2	
	25-33047- 23	M1		1	
	25-33047- 25	M1		2	
	25-33047- 29	M1		1	
	25-33047- 31	M1		1	
	25-33047- 33	M1		1	
	25-33047- 37	M1		1	
	25-33047- 39	M1		1	
	25-33047- 40	M1		1	
	25-33047- 41	M1		1	
	25-33047- 42	M1		1	
	25-33047- 45	M1		1	
	25-33047- 63	M1		1	
	25-33047- 65	M1		1	
	25-33047- 69	M1		1	
	25-33047- 70	M1		1	
	25-33047- 73	M1		1	
	25-33047- 75	M1		2	
	25-33047- 77	M1		2	
	25-33047- 79	M1	140 - 24	1	
	25-33047- 81	M1		1	
	25-33047- 83	M1		2	
	25-33047- 85	M1		1	
	25-33047- 87	M1		1	
	25-33047- 91	M1		1	
	25-33047- 93	M1		1	
	25-33047- 95	M1		2	
	25-33047- 97	M1		3	
	25-33047- 99	M1		2	
	25-33047-101	M1		2	
	25-33047-107	M1		1	
	25-33047-109	M1		2	
	25-33047-111	M1		1	

STOCK	PART NUMBER	SOURCE CODE	FIGURE & INDEX NO.	QTY. PER A/C	MICROFILM INDEX
	25-33047-113	M1		1	
	25-33047-115	M1		1	
	25-33047-121	M1		1	
	25-33047-123	M1		1	
	25-33047-125	M1		1	
	25-33047-127	M1		1	
	25-33047-129	M1		1	
	25-33047-130	M1		1	
	25-33047-131			1	
	25-33047-132			1	
	25-33047-133			1	
	25-33047-135			1	
	25-33047-137			1	
	25-33047-139			2	
	25-33047-141			2	
	25-33047-143			2	
	25-33047-145			2	
	25-33047-147			1	
	25-33047-149			2	
	25-33047-151			2	
	25-33047-153			2	
	25-33047-155			1	
	25-33047-157			1	
	25-33047-159			1	
	25-33047-160			1	
	25-33047-161			4	
	25-33047-163			2	
	25-33047-165			2	
	25-33047-301	M1	139 - 2 140 -	1	
	25-33047-303	M1	139 - 2 140 -	1	
	25-33047-305		139 - 2 140 -	1	
	25-33048- 1	M1	139 - 1 141 -	1	H-199
	25-33048- 3	M1		1	
	25-33048- 4	M1		1	
	25-33048- 5	M1		1	
	25-33048- 6	M1		1	
	25-33048- 7	M1		1	
	25-33048- 8	M1		1	
	25-33048- 9	M1		1	
	25-33048- 10	M1		1	
	25-33048- 11	M1		1	
	25-33048- 12	M1		1	
	25-33048- 16	M1		1	
	25-33048- 17	M1		1	
	25-33048- 18	M1		1	
	25-33048- 19	M1		1	
	25-33048- 20	M1		1	
	25-33048- 21	M1		1	
	25-33048- 23	M1		2	
	25-33048- 25	M1		3	
	25-33048- 26			1	
	25-33048- 27	M1		3	
	25-33048- 28			1	
	25-33048- 29	M1		1	
	25-33048- 30	M1		1	
	25-33048- 33	M1		2	
	25-33048- 37	M1		1	
	25-33048- 41	M1		2	
	25-33048- 43	M1		2	
	25-33048- 45	M1		2	
	25-33048- 47	M1		2	
	25-33048- 49	M1		4	
	25-33048- 51	M1		4	
	25-33048- 53	M1		2	
	25-33048- 55	M1		2	
	25-33048- 57	M1		2	
	25-33048- 59	M1		4	
	25-33048- 61	M1		4	
	25-33048- 63	M1		2	
	25-33048- 65	M1		2	
	25-33048- 67	M1		2	
	25-33048- 69	M1		2	
	25-33048- 73	M1		1	
	25-33048- 75	M1		2	
	25-33048- 77	M1		1	
	25-33048- 78	M1		1	
	25-33048- 81			1	
	25-33048- 82			1	
	25-33048-301	M1	139 - 1 141 -	1	
	25-33049- 5	M1	141 - 3	2	B-529
	25-33050- 1	M1		1	D-367
	25-33050- 3	M1		1	
	25-33050- 5	M1		1	
	25-33051- 1	M1	139 - 9	1	G-55
	25-33051- 4	M1		1	
	25-33051- 5	M1		1	
	25-33051- 6	M1		1	
	25-33051- 7	M1		1	
	25-33051- 8	M1		1	
	25-33051- 11	M1		1	
	25-33051- 13	M1		1	

STOCK	PART NUMBER	SOURCE CODE	FIGURE & INDEX NO.	QTY. PER A/C	MICROFILM INDEX
	25-33051- 15	M1		2	
	25-33051- 17	M1		2	
	25-33051- 19	M1		2	
	25-33051- 25	M1		2	
	25-33051- 27	M1		2	
	25-33051- 29	M1		2	
	25-33051- 31	M1		2	
	25-33051- 33	M1		1	
	25-33051- 35	M1		1	
	25-33051- 37	M1		2	
	25-33051- 39	M1		2	
	25-33051- 41	M1		2	
	25-33051- 49	M1		2	
	25-33051- 51	M1		4	
	25-33051- 53	M1		4	
	25-33051- 57	M1		2	
	25-33051- 59	M1		2	
	25-33051- 61	M1		1	
	25-33051- 63	M1		1	
	25-33051- 65	M1		1	
	25-33051- 69	M1		1	
	25-33051- 71	M1		1	
	25-33051- 73	M1		1	
	25-33051- 74	M1		1	
	25-33051- 75	M1		1	
	25-33051- 76	M1		1	
	25-33051- 77	M1		2	
	25-33051- 79	M1		3	
	25-33051- 80			1	
	25-33051- 81	M1		2	
	25-33051- 83	M1		4	
	25-33051- 85	M1		2	
	25-33051- 87	M1		2	
	25-33051- 89	M1		1	
	25-33051- 91	M1		1	
	25-33051- 92	M1		1	
	25-33051- 95	M1		1	
	25-33051- 97	M1		2	
	25-33051-103			1	
	25-33051-301	M1	139 - 3	1	
	25-33051-303			1	
	25-33056- 1	*	139 -	1	G-56
	25-33056- 3	M1	139 - 45	1	
	25-33056- 5	M1	139 -	1	
	25-33056- 1	M1		2	XA-225 THRU XA-228
	25-33056- 2	M1		2	
	25-33056- 3	M1		1	
	25-33056- 4	M1		1	
	25-33056- 5	M1		1	
	25-33056- 6	M1		1	
	25-33056- 7	M1		1	
	25-33056- 8	M1		1	
	25-33056- 9	M1		1	
	25-33056- 10	M1		1	
	25-33056- 11	M1		1	
	25-33056- 12	M1		1	
	25-33056- 13	M1		1	
	25-33056- 14	M1		1	
	25-33056- 15	M1		1	
	25-33056- 16	M1		1	
	25-33056- 19	M1		1	
	25-33056- 20	M1		1	
	25-33056- 25	M1		1	
	25-33056- 26	M1		1	
	25-33056- 33	M1		1	
	25-33056- 34	M1		1	
	25-33056- 35	M1		1	
	25-33056- 36	M1		1	
	25-33056- 37	M1		1	
	25-33056- 38	M1		1	
	25-33056- 39	M1		1	
	25-33056- 40	M1		1	
	25-33056- 41	M1		1	
	25-33056- 42	M1		1	
	25-33056- 43	M1		2	
	25-33056- 45	M1		1	
	25-33056- 46	M1		1	
	25-33056- 47	M1		1	
	25-33056- 48	M1		1	
	25-33056- 49	M1		1	
	25-33056- 50	M1		1	
	25-33056- 51	M1		1	
	25-33056- 52	M1		1	
	25-33056- 53	M1		1	
	25-33056- 54	M1		1	
	25-33056- 55	M1		1	
	25-33056- 56	M1		1	
	25-33056- 57	M1		1	
	25-33056- 59	M1		1	
	25-33056- 60	M1		1	
	25-33056- 61	M1		1	
	25-33056- 62	M1		1	
	25-33056- 63	M1		1	
	25-33056- 64	M1		1	
	25-33056- 65	M1		1	

STOCK	PART NUMBER	SOURCE CODE	FIGURE & INDEX NO.	QTY. PER A/C	MICROFILM INDEX
	25-33056- 66	M1		1	
	25-33056- 67	M1		1	
	25-33056- 68	M1		1	
	25-33056- 69	M1		1	
	25-33056- 70	M1		1	
	25-33056- 71	M1		1	
	25-33056- 72	M1		1	
	25-33056- 73	M1		1	
	25-33056- 74	M1		1	
	25-33056- 75	M1		1	
	25-33056- 76	M1		1	
	25-33056- 77	M1		1	
	25-33056- 78	M1		1	
	25-33056- 79	M1		1	
	25-33056- 80	M1		1	
	25-33056- 83	M1		1	
	25-33056- 84	M1		1	
	25-33056- 85	M1		1	
	25-33056- 86	M1		1	
	25-33056- 87	M1		1	
	25-33056- 88	M1		1	
	25-33056- 89	M1		1	
	25-33056- 90	M1		1	
	25-33056- 91	M1		1	
	25-33056- 93	M1		1	
	25-33056- 95	M1		1	
	25-33056- 97	M1		1	
	25-33056- 99	M1		1	
	25-33056-101	M1		1	
	25-33056-103	M1		1	
	25-33056-104	M1		1	
	25-33056-105	M1		1	
	25-33056-107	M1		1	
	25-33056-109	M1		1	
	25-33056-110	M1		1	
	25-33056-111	M1		1	
	25-33056-112	M1		1	
	25-33056-113	M1		2	
	25-33056-115	M1		2	
	25-33056-117	M1		1	
	25-33056-119	M1		1	
	25-33056-121	M1		1	
	25-33056-123	M1		1	
	25-33056-125	M1		1	
	25-33056-126	M1		1	
	25-33056-127	M1		1	
	25-33056-129	M1		1	
	25-33056-130	M1		1	
	25-33056-131	M1		2	
	25-33056-133	M1		2	
	25-33056-137	M1		1	
	25-33056-138	M1		1	
	25-33056-139	M1		2	
	25-33056-140	M1		2	
	25-33056-141	M1		1	
	25-33056-143	M1		1	
	25-33056-144	M1		1	
	25-33056-145	M1		1	
	25-33056-146	M1		1	
	25-33056-147			1	
	25-33056-148			1	
	25-33056-149			2	
	25-33056-151			2	
	25-33056-152			2	
	25-33056-153			2	
	25-33056-154			2	
	25-33056-155			2	
	25-33056-156			2	
	25-33056-157			2	
	25-33056-159			1	
	25-33056-160			1	
	25-33056-161			1	
	25-33056-162			1	
	25-33056-163			1	
	25-33056-164			1	
	25-33056-165			1	
	25-33056-166			1	
	25-33057- 1	M1		1	G-52 THRU G-60
	25-33057- 3	M1		1	
	25-33057- 5	M1		1	
	25-33057- 6	M1		1	
	25-33057- 7	M1		2	
	25-33057- 9	M1		1	
	25-33057- 11	M1		1	
	25-33057- 13	M1		1	
	25-33057- 14	M1		1	
	25-33058- 1	M1	141 -	1	G-61 THRU G-63
	25-33058- 5	M1		1	
	25-33058- 6	M1		1	
	25-33058- 7	M1		1	
	25-33058- 9	M1		1	
	25-33058- 11	M1		1	
	25-33058- 12	M1		1	
	25-33058- 13	M1		1	
	25-33058- 15	M1		1	
	25-33058- 17	M1		1	

STOCK	PART NUMBER	SOURCE CODE	FIGURE & INDEX NO.	QTY. PER A/C	MICROFILM INDEX
	25-33058- 19	M1		1	
	25-33058- 21	M1		1	
	25-33058- 23	M1		1	
	25-33058- 25	M1		1	
	25-33058- 27	M1		1	
	25-33058- 28	M1		1	
	25-33058- 29	M1		1	
	25-33058- 31	M1		3	
	25-33058- 33	M1		1	
	25-33058- 35	M1		1	
	25-33058- 37	M1		1	
	25-33058- 39	M1		1	
	25-33058- 40	M1		1	
	25-33058- 41	M1		4	
	25-33058- 45	M1		1	
	25-33058- 46	M1		1	
	25-33058- 47	M1		1	
	25-33058- 48	M1		1	
	25-33058- 49	M1		1	
	25-33058- 51	M1		1	
	25-33058- 53	M1		1	
	25-33058- 55	M1		1	
	25-33058- 61	M1		1	
	25-33058- 63	M1		1	
	25-33058- 65	M1		1	
	25-33058- 67	M1		1	
	25-33058- 69	M1		1	
	25-33058- 70	M1		1	
	25-33058- 71	M1		1	
	25-33058- 73	M		1	
	25-33058- 75	M1		1	
	25-33058- 77			1	
	25-33058- 79			1	
	25-33058- 81			1	
	25-33058- 83			1	
	25-33058- 85			1	
	25-33058- 87			1	
	25-33058- 89			1	
	25-33058-301		141 -	1	
	25-33058-601			1	
	25-33059- 1	*		1	G-64
	25-33059- 3	M1		1	
	25-33059- 5	M1		1	
	25-33059- 7	M1		1	
	25-33060- 1	M1		1	G-65
	25-33060- 2	M1		1	
	25-33060- 3	M1		1	
	25-33060- 4	M1		1	
	25-33060- 5	M1		1	
	25-33060- 6	M1		1	
	25-33060- 7	M1		1	
	25-33060- 8	M1		1	
	25-33060- 9	M1		1	
	25-33060- 10	M1		1	
	25-33060-301	M1		1	
	25-33060-302	M1		1	
	25-33063- 3F	X1		1	G-72
	25-33063- 4F	X1		1	
	25-33064- 1	M1	139 - 15	1	
	25-33064- 3	M1		1	
	25-33064- 5	X1		1	
	25-33064- 7	M1		2	
	25-33065- 5F	X1		1	G-74
	25-33066- 3F	X1		1	G-75
	25-33067- 3F	X1		3	G-76
	25-33067- 4F	X1		3	
	25-33068- 3			1	
	25-33068- 4			1	
	25-33069- 3			1	
	25-33069- 4			1	
	25-33070- 3F	X1		1	G-77
R82MDA-	25-33071- 1	P1	140 - 45	1	G-78
	25-33071- 3	X1		1	
	25-33071- 5	X1		1	
	25-33071- 7	X1		1	
	25-33071- 8	X1		1	
	25-33071- 9	X1		1	
	25-33071- 11	X1		1	
	25-33072-3-4F	X1		2	
R82MDA-	25-33073- 1	P1	139 - 5	1	G-80
R82MDA-	25-33073- 2	P1	139 - 6	1	
	25-33073- 3	M1		1	
	25-33073- 4	M1		1	
	25-33073- 5	M1		1	
	25-33073- 6	M1		1	
	25-33073- 7	M1	139 - 11	1	
	25-33073- 8	M1	139 - 12	1	
	25-33074- 3			1	
	25-33074- 4			1	
	25-33075- 3	M1		2	A-305
R82MDA-	25-33077- 1	P1	140 - 5	1	G-81
	25-33077- 9	M1		8	
	25-33077- 15			2	
R82MDA-	25-33078- 3	P1	139 - 20	1	C-534
	25-33079- 3F	X1		1	C-535
	25-33080- 1	M1	141 - 16	1	G-82

STOCK	PART NUMBER	SOURCE CODE	FIGURE & INDEX NO.	QTY. PER A/C	MICROFILM INDEX
	25-33080- 3	M1		2	
	25-33080- 5	M1		1	
	25-33080- 7	M1		1	
	25-33080- 8	M1		1	
R82MDA-	25-33081- 1	P1	140 - 34	1	
	25-33081- 3	X1		1	
	25-33082- 3			1	
	25-33082- 4	M1		1	C-536
	25-33082- 5	M1		1	
	25-33082- 6	M1		1	
	25-33083- 3	M1	141 - 12	4	A-306
	25-33084- 1	M1		1	G-83
	25-33084- 7	M1		2	
	25-33084- 9	M1		1	
	25-33084- 13	M1		1	
	25-33084- 17	M1		1	
	25-33084- 21	M1		2	
	25-33084- 23	M1		4	
	25-33084- 25	M1		1	
	25-33084- 27	M1		1	
	25-33084- 29	M1		1	
	25-33084- 31	M1		1	
	25-33085- 3			1	
R82MDA-	25-33086- 1	P1	140 - 30	1	A-307
	25-33086- 3	X1		1	
	25-33087- 1			1	
	25-33087- 2			1	
	25-33087- 3			1	
	25-33087- 4			1	
	25-33088- 3	M1		1	C-538
	25-33088- 4	M1		1	
	25-33089- 3	M1		1	C-539
	25-33089- 4	M1		1	
	25-33090- 3F	X1		1	
	25-33091- 1	M1		1	G-84
	25-33091- 2	M1		1	
	25-33091- 4	M1		1	
	25-33091- 5	M1		1	
	25-33091- 7	M1		1	
	25-33091- 9			1	
	25-33091- 10			2	
	25-33092- 3	M1	140 - 29	1	A-308
	25-33093- 3	X2	141 - 1	1	G-85
	25-33093- 4	M1	141 - 2	1	
	25-33093- 5	M1		1	
	25-33093- 6	M1		1	
R82MDA-	25-33094- 1	P	140 - 62	1	G-86
	25-33094- 7			1	
	25-33094- 13			1	
	25-33094- 15			1	
	25-33094- 17			1	
	25-33094- 19			1	
	25-33094- 21			1	
R82MDA-	25-33095- 1	P	139 - 39	1	G-87
R82MDA-	25-33095- 2	P	139 - 40	1	
	25-33095- 7			1	
	25-33095- 8			1	
	25-33095- 9			1	
	25-33095- 11			1	
	25-33095- 13			1	
	25-33095- 15			1	
	25-33095- 16			1	
	25-33095- 17			1	
	25-33095- 19			1	
	25-33095- 21			1	
R82MDA-	25-33096- 1	P	139 - 21	1	G-88
R82MDA-	25-33096- 2	P	139 - 22	1	
	25-33096- 3	X1		1	
	25-33096- 4	X1		1	
	25-33096- 5	X1		1	
	25-33096- 6	X1		1	
	25-33097- 1	M1	139 - 32	1	G-89
	25-33097- 2	M1	139 - 33	1	
	25-33097- 3	M1		1	
	25-33097- 4	M1		1	
	25-33098- 1	M1	139 - 24	1	
	25-33098- 2	M1	139 - 25	1	
	25-33098- 3	M1		1	
	25-33098- 4	M1		1	
	25-33099- 1	M1	141 - 5	1	C-542
	25-33099- 2	M1	141 - 5	1	
	25-33099- 3	M1		1	
	25-33099- 4	M1		1	
	25-33100- 3	M1	141 - 25	1	G-90
	25-33100- 4	M1	141 - 26	1	
	25-33101- 1	M1	140 - 1	1	G-91
	25-33101- 7	X1		1	
	25-33101- 9	X1		1	
	25-33101- 11	X1		1	
	25-33102- 1		140 - 3	1	C-543
	25-33103- 3	M1		1	G-92
	25-33103- 4	M1		1	
	25-33103- 5	M1		1	
	25-33103- 6	M1		1	
	25-33103- 9	M1		1	
	25-33103- 11			1	

STOCK	PART NUMBER	SOURCE CODE	FIGURE & INDEX NO.	QTY. PER A/C	MICROFILM INDEX
	25-33103- 13			2	
	25-33104- 1	M1		1	G-93
	25-33104- 3	M1		1	
	25-33104- 4	M1		1	
	25-33104- 5	M1		1	
	25-33104- 6	M1		1	
	25-33104- 9	M1		1	
	25-33104- 11	M1		1	
	25-33104- 13	M1		1	
	25-33104- 14	M1		1	
	25-33104- 15	M1		1	
	25-33104- 17			1	
	25-33104- 19			2	
	25-33105- 1	M1		1	G-94
	25-33105- 3	M1		1	
	25-33105- 4	M1		1	
	25-33105- 5	M1		1	
	25-33105- 6	M1		1	
	25-33105- 7	M1		1	
	25-33105- 9	M1		1	
	25-33105- 11	M1		1	
	25-33105- 13	M1		1	
	25-33105- 15			2	
	25-33105- 17			2	
	25-33105- 25	M1		1	
R82MDA-	25-33106- 1	P1	141 - 13	1	G-95
	25-33106- 3	X1		1	
	25-33106- 5	X1		1	
	25-33106- 7	X1		1	
	25-33106- 9	X1		1	
	25-33106- 11	X1		1	
	25-33106- 13	X1		1	
	25-33106- 15	M	141 - 15	2	
	25-33106- 17	X1		1	
	25-33106- 19	X1		1	
	25-33106- 20	X1		1	
	25-33107- 3	M1		4	A-309
	25-33108- 3	M1		2	A-310
	25-33109- 3F	X1		1	C-544
R82MDA-	25-33110- 3	P1	138 - 27	1	C-545
	25-33111- 1	M1		1	D-369
	25-33111- 3	M1		1	
	25-33111- 5	M1		1	
	25-33111- 6	M1		1	
	25-33111- 7	M1		1	
	25-33111- 9	M1		1	
	25-33111- 10	M1		1	
	25-33111- 11			6	
	25-33113- 1	M1		1	
	25-33113- 5	M1		1	D-370
	25-33113- 7	M1		1	
	25-33113- 9	M1		1	
	25-33113- 13	M1		1	
	25-33113- 14	M1		1	
	25-33113- 15	M1		1	
	25-33114- 3	M1	111 - 11 139 - 13	4	B-533
	25-33115- 1			1	G-96
	25-33115- 3	M1		1	
	25-33115- 5			1	
	25-33115- 7			1	
	25-33115- 9			1	
	25-33116- 1	M1		1	G-97
	25-33116- 2			1	
	25-33116- 3			1	
	25-33116- 4			1	
	25-33116- 5			1	
	25-33116- 6			1	
	25-33116- 7			1	
	25-33116- 8			1	
	25-33116- 9			1	
	25-33116- 10			1	
	25-33116- 11			1	
	25-33116- 12			1	
	25-33116- 13			1	
	25-33116- 14			1	
	25-33116- 15			1	
	25-33116- 16			1	
	25-33116- 17			1	
	25-33116- 18			1	
	25-33116- 19			2	
	25-33117- 3	M1		1	G-98
	25-33117- 4			1	
	25-33117- 5			1	
	25-33117- 6			1	
	25-33118- 3	M1		1	C-546
	25-33118- 4			1	
	25-33119- 3	M1		1	C-547
	25-33119- 4			1	
	25-33120- 3	M1		1	C-548
	25-33120- 4			1	
	25-33120- 5			1	
	25-33120- 6			1	
	25-33121- 3	M1		1	G-99
	25-33121- 4			1	
	25-33122- 3	M1		1	C-549

STOCK	PART NUMBER	SOURCE CODE	FIGURE & INDEX NO.	QTY. PER A/C	MICROFILM INDEX
	25-33122- 4			1	
	25-33122- 5			1	
	25-33122- 6			1	
	25-33122- 7			1	
	25-33122- 8			1	
	25-33123- 3	X2	141 - 4	2	
	25-33124- 3	M1		4	B-535
	25-33125- 1	M	143 - 2	1	G-100
	25-33125- 5	X1		1	
	25-33125- 7	M1		1	
	25-33126- 1	M1		1	D-371
	25-33126- 5	M1		1	
	25-33126- 7	M		1	
	25-33128- 1	M1		1	G-102
	25-33128- 2	M1		1	
	25-33128- 3	M1		1	
	25-33128- 4	M1		1	
	25-33128- 5	M1		1	
	25-33128- 6	M1		1	
	25-33128- 7	M1		1	
	25-33128- 8	M1		1	
	25-33128- 15			1	
	25-33128- 16			1	
	25-33128- 17			1	
	25-33128- 18			1	
	25-33128- 19			2	
	25-33128- 21			1	
	25-33128- 22			1	
	25-33129- 1	M1	143 -	2	
	25-33129- 2	M1	143 -	2	
	25-33129- 3	M1		2	
	25-33129- 4	M1		2	
	25-33129- 5	M1		4	
	25-33129- 7	M1		2	
	25-33129- 8	M1		2	
	25-33129- 9	M1		2	
	25-33129- 10	M1		2	
	25-33129- 11	M1		4	
	25-33129- 13	M1		2	
	25-33129- 14	M1		2	
	25-33129- 15	M1		2	
	25-33129- 16	M1		2	
	25-33129- 17	M1	143 - 10	2	
	25-33129- 18	M1	143 - 10	2	
	25-33129- 19	M1	143 - 11	2	
	25-33129- 20	M1	143 - 11	2	
	25-33129- 21	M1		4	
	25-33129- 23	M1		2	
	25-33129- 24	M1		2	
	25-33129- 25	M1		4	
	25-33129- 27	M1		2	
	25-33129- 29	M1		2	
	25-33129- 31	M1		4	
	25-33130- 3	X1		1	D-372
	25-33130- 5	X1		1	
	25-33131- 1	M1		1	D-373
	25-33131- 5	M1		1	
	25-33131- 7	M1		1	
	25-33131- 9	M1		1	
	25-33131- 10	M1		1	
	25-33131- 11	M1		1	
	25-33131- 12	M1		1	
	25-33131- 13	M1		1	
	25-33131- 15			1	
	25-33132- 1	M1		1	G-103
	25-33132- 5	M1		1	
	25-33132- 6	M1		1	
	25-33132- 11	M1		1	
	25-33132- 13	M1		1	
	25-33132- 15	M1		1	
	25-33132- 17	M1		2	
	25-33137- 1	M1		1	C-553
	25-33137- 9			1	
	25-33137- 11			1	
	25-33137- 13			1	
	25-33137- 14			1	
	25-33139- 1	M1		1	C-554
	25-33139- 9			1	
	25-33139- 11			1	
	25-33140- 1	M1		1	C-555
	25-33142- 1	M1		1	G-106
	25-33142- 3	M1		1	
	25-33142- 5	M1		1	
	25-33142- 6	M1		1	
	25-33142- 7	M1		1	
	25-33142- 9	M1		1	
	25-33142- 10	M1		1	
	25-33142- 11	M1		2	
	25-33142- 13	M1		1	
	25-33143- 1	M1		1	G-107
	25-33143- 3	M1		1	
	25-33143- 5	M1		1	
	25-33143- 6	M1		1	
	25-33143- 7	M1		1	
	25-33143- 9	M1		2	
	25-33144- 1	M1		1	C-557

STOCK	PART NUMBER	SOURCE CODE	FIGURE & INDEX NO.	QTY. PER A/C	MICROFILM INDEX
	25-33144- 3	M1		1	
	25-33144- 5	M1		1	
	25-33144- 7	M1		1	
	25-33144- 8	M1		1	
	25-33144- 9	M1		1	
	25-33145- 1	M1		1	C-558
	25-33145- 3	M1		1	
	25-33145- 5	M1		1	
	25-33145- 7	M1		1	
	25-33145- 8	M1		1	
	25-33145- 9	M1		1	
	25-33146- 1	M1		1	C-559
	25-33146- 3	M1		1	
	25-33146- 5	M1		1	
	25-33146- 7	M1		1	
	25-33146- 8	M1		1	
	25-33146- 9	M1		2	
	25-33147- 1	M1		1	C-560
	25-33147- 3	M1		1	
	25-33147- 5	M1		1	
	25-33147- 7	M1		1	
	25-33147- 9	M1		1	
	25-33148- 5	M1		2	XA-290
	25-33148- 7	M1		1	
	25-33148- 8	M1		1	
	25-33148- 11	M1		1	
	25-33148- 12	M1		2	
	25-33148- 13	M1		1	
	25-33148- 14	M1		1	
	25-33148- 15	M1		1	
	25-33148- 16	M1		1	
	25-33148- 17	M1		1	
	25-33148- 18	M1		1	
	25-33148-301	M1		1	
	25-33148-302	M1		1	
	25-33149- 3	X2	141 - 3	2	
	25-33150- 3	M1		14	A-311
	25-33151- 1	M1		1	C-561
	25-33151- 3	M1		1	
	25-33151- 5	M1		1	
	25-33151- 7	M1		1	
	25-33151- 8	M1		1	
	25-33151- 9	M1		2	
	25-33152- 1	M1		1	C-562
	25-33152- 2	M1		1	
	25-33152- 3	M1		1	
	25-33152- 4	M1		1	
	25-33152- 5	M1		1	
	25-33152- 6	M1		1	
	25-33153- 1	M1	142 - 4	2	G-109
	25-33153- 3	X1		2	
	25-33153- 5	X1		2	
	25-33153- 7	X1		2	
	25-33153- 9	M1		2	
	25-33153- 11	M1		4	
	25-33154- 5	M1		2	A-312
	25-33155- 1	M1	143 - 3	1	C-563
	25-33155- 2	M1	143 - 3	1	
	25-33155- 7	M1		1	
	25-33155- 8	M1		1	
	25-33155- 9	M1		1	
	25-33155- 10	M1		1	
	25-33156- 3	M1	143 - 4	1	G-110
	25-33156- 4	M1	143 - 4	2	
	25-33157- 5		143 - 6	22	A-313
			143 - 7		
	25-33190- 3	M1		1	B-538
	25-33190- 4	M1		1	
	25-33190- 5	M1		1	
	25-33190- 6	M1		1	
	25-33190- 7	M1		1	
	25-33190- 8	M1		1	
	25-33190- 9	M1		1	
	25-33190- 10	M1		1	
	25-33190- 11	M1		2	
	25-33190- 12	M1		2	
	25-33190- 13	M1		2	
	25-33190- 14	M1		2	
	25-33190- 15	M1		1	
	25-33190- 16	M1		1	
	25-33190- 17	M1		1	
	25-33190- 18	M1		1	
	25-33190- 19	M1		1	
	25-33190- 20	M1		1	
	25-33190- 21	M1		1	
	25-33190- 22	M1		1	
	25-33160- 1	M1		1	B-539
	25-33160- 2	M1		1	
	25-33160- 3	M1		1	
	25-33160- 4	M1		1	
	25-33160- 5	M1		1	
	25-33160- 6	M1		1	
	25-33162- 6	M1		1	B-540
	25-33165- 5	M1		1	A-315
	25-33165- 7			2	
	25-33166- 3	M1		79	A-42

STOCK	PART NUMBER	SOURCE CODE	FIGURE & INDEX NO.	QTY. PER A/C	MICROFILM INDEX
	25-33167- 3	M1		1	A-316
	25-33167- 4	M1		1	
	25-33168- 3	M1		1	B-543
	25-33171- 3	M1		1	A-318
	25-33171- 4	M1		1	
	25-33171- 5	M1		1	
	25-33171- 6	M1		1	
R82MDA-	25-33172- 3	P1	140 - 23	1	C-565
	25-33172- 3F	X1		1	
	25-33173- 3	M1		2	C-566
	25-33173-603			1	
	25-33174- 1	M1	139 - 18	1	C-567
	25-33174- 2	M1	139 - 19	1	
	25-33174- 3	M		1	
	25-33174- 4	M		1	
	25-33174- 5	M1		1	
	25-33174- 7	M1		1	
	25-33174- 9	M1		2	
	25-33175- 1	M1	141 - 55	1	C-568
	25-33175- 2	M1	141 - 56	1	
	25-33175- 3	M1		1	
	25-33175- 4	M1		1	
	25-33176- 3	M1		1	G-111
	25-33176- 5	M1		1	
	25-33177- 1	M1		1	C-569
	25-33177- 2	M1		1	
	25-33177- 3	M1		3	
	25-33177- 4	M1		2	
	25-33177- 5	M1		2	
	25-33178- 1	M1		1	C-570
	25-33178- 2	M1		1	
	25-33178- 3	M1		1	
	25-33178- 4	M1		1	
	25-33178- 7	M1		2	
	25-33179- 1	M1		1	C-571
	25-33179- 2	M1		1	
	25-33179- 3	M1		1	
	25-33179- 4	M1		1	
	25-33179- 5	M1		3	
	25-33179- 6			1	
	25-33180- 1			1	
	25-33180- 3			1	
	25-33180- 5			1	
	25-33180- 7			2	
	25-33180- 9			2	
	25-33180- 11			1	
R82MDA-	25-33182- 3	P1	141 - 19	1	
	25-33183- 1	M1	141 - 21	1	C-572
	25-33183- 3	M1		1	
	25-33183- 5	M1		1	
	25-33184- 1	M1		1	G-112
	25-33184- 2	M1		1	
	25-33184- 3	M1		1	
	25-33184- 4	M1		1	
	25-33184- 5	M1		1	
	25-33184- 6	M1		1	
	25-33184- 9	M1		1	
	25-33184- 11	M1		1	
	25-33184- 13	M1		1	
	25-33184- 14	M1		1	
	25-33184- 15	M1		1	
	25-33184- 16	M1		1	
	25-33184- 17	M1		1	
	25-33184- 18	M1		1	
	25-33184- 19	M1		1	
	25-33184- 20	M1		1	
	25-33186- 1	M1		1	D-374
	25-33186- 2	M1		1	
	25-33186- 3	M1		1	
	25-33186- 4	M1		1	
	25-33186- 5	M1		2	
	25-33186- 7	M1		2	
	25-33187- 1	M1		1	D-375
	25-33187- 2	M1		1	
	25-33187- 5	M1		1	
	25-33187- 6	M1		1	
	25-33187- 7	M1		1	
	25-33187- 8	M1		1	
	25-33188- 1	M1		1	G-113
	25-33188- 2	M1		1	
	25-33188- 3	M1		1	
	25-33188- 4	M1		1	
	25-33188- 5	M1		1	
	25-33188- 6	M1		1	
	25-33189- 1	M1	139 - 31	3	C-573
	25-33189- 3	M1		3	
	25-33189- 5	M1		4	
	25-33189- 7	M1		4	
	25-33189- 9	M1		4	
	25-33189- 11	M1		4	
	25-33189-603			1	
	25-33189-6301		139 - 44	1	
	25-33192- 1			1	
	25-33192- 3			1	
	25-33192- 5			1	
	25-33192- 7			2	

STOCK	PART NUMBER	SOURCE CODE	FIGURE & INDEX NO.	QTY. PER A/C	MICROFILM INDEX
	25-33194- 3	M1	141 - 40	1	C-574
	25-33194- 4	M1	141 - 40	1	
	25-33195- 1	*	140 -	1	
	25-33196- 3	M1		1	B-546
	25-33196- 5	M1		1	
	25-33197- 1	M1		1	D-376
	25-33197- 2	M1		1	
	25-33197- 7	M1		1	
	25-33197- 8	M1		1	
	25-33197- 9			1	
	25-33197- 11			1	
	25-33197- 13			1	
	25-33197- 14			1	
	25-33198			1	G-114
	25-33198- 3	M1		1	
	25-33198- 4	M1		1	
	25-33198- 5	M1		1	
	25-33198- 6	M1		1	
	25-33198- 7	M1		1	
	25-33198- 11	M1		1	
	25-33198- 12	M1		1	
	25-33198- 15	M1		1	
	25-33198- 16	M1		1	
	25-33198- 17	M1		1	
	25-33198- 18	M1		1	
	25-33198- 19	M1		1	
	25-33198- 20	M1		1	
	25-33198- 21	M1		1	
	25-33198- 22	M1		1	
	25-33198- 23	M1		1	
	25-33198- 25			1	
	25-33198- 26			1	
	25-33198- 27			2	
	25-33198- 28			2	
	25-33199- 1	M1		1	C-576
	25-33199- 3	M1		1	
	25-33199- 4	M1		1	
	25-33199- 5	M1		1	
	25-33200- 4	M1		1	B-547
	25-33201- 3	M1		1	D-377
	25-33201- 4	M1		1	
	25-33202- 3	M1		1	G-115
	25-33202- 4	M1		1	
	25-33203- 3	M1		2	G-116
	25-33204- 1	*	141 -	1	C-577
	25-33204- 2	*	141 -	1	
	25-33204- 3	M1	141 - 45	1	
	25-33204- 4	M1	141 - 46	1	
	25-33204- 5	M1		1	
	25-33204- 6	M1		1	
	25-33204- 7	M1		2	
	25-33204- 9	M1	141 - 48	2	
	25-33204- 11	M1	141 - 49	2	
	25-33204- 13	M1		1	
	25-33204- 14	M1		1	
	25-33205- 1	*	141 -	1	G-117
	25-33205- 2	*	141 -	1	
	25-33205- 3	M1	141 - 29	1	
	25-33205- 4	M1	141 - 30	1	
	25-33205- 5	M1		1	
	25-33205- 6	M1		1	
	25-33205- 7	M1		2	
	25-33205- 9	M1		1	
	25-33205- 10	M1		1	
	25-33205- 11	M1	141 - 32	2	
	25-33205- 13	M1	141 - 33	2	
	25-33206- 3F	X1		1	G-118
	25-33207- 3	X2	140 - 44	1	
	25-33209- 1	M1		1	C-578
	25-33209- 3	M1		1	
	25-33209- 5	M1		1	
	25-33209- 9	M1		1	
	25-33210- 3	M1	139 - 16	1	B-548
	25-33211- 1			1	
	25-33212- 1	*	138 -	1	B-549
	25-33212-301	*	138 -	1	
	25-33213-301	*	138 - 12 142 -	1	G-120
	25-33213-303	*	138 - 12 142 -	1	
	25-33215- 3	M1		1	A-324
	25-33216- 3	M1		1	XB-16
	25-33216- 5	M1		1	
	25-33217- 3	M1		2	XA-19
	25-33218- 1	M1		1	XA-59
	25-33218- 3	M1		1	
	25-33218- 5	M1		1	
	25-33218- 7			1	
	25-33218-301			1	
	25-33219- 1			1	
	25-33219- 3			2	
	25-33219- 5			1	
	25-33220- 1			1	
	25-33220- 3			1	
	25-33220- 5			2	
	25-33220- 6			2	

STOCK	PART NUMBER	SOURCE CODE	FIGURE & INDEX NO.	QTY. PER A/C	MICROFILM INDEX
	25-33220- 7			2	
	25-33220- 9			1	
	25-33220- 10			1	
	25-33220- 11			1	
	25-33220- 13			1	
	25-33221- 1			1	
	25-33221- 3			1	
	25-33221- 4			1	
	25-33221- 5			2	
	25-33221- 6			2	
	25-33222- 1			1	
	25-33222- 3			1	
	25-33222- 5			1	
	25-33222- 7			2	
	25-33222- 8			2	
	25-33222- 9			2	
	25-33223- 1			1	
	25-33223- 3			2	
	25-33223- 5			2	
	25-33223- 6			2	
	25-33223- 9			1	
	25-33224- 1		141 -	1	
	25-33224- 2		141 -	1	
	25-33224- 3	M1		1	
	25-33224- 4	M1		1	
	25-33224- 5	M1		1	
	25-33224- 6	M1		1	
	25-33224- 7	M1		1	
	25-33224- 8	M1		1	
	25-33224- 9	M1		1	
	25-33224- 10	M1		1	
	25-33225- 1		138 - 10	1	
			143 -		
	25-33225- 3			1	
	25-33225- 5			1	
	25-33225- 7			1	
	25-33225- 8			1	
	25-33225- 9		143 - 1	1	
	25-33225- 11		143 - 8	1	
	25-33225- 12		143 - 9	1	
	25-33225 13			1	
	25-33225- 15			1	
	25-33225- 17			1	
	25-33225- 18			1	
	25-33225- 19			1	
	25-33225- 21			1	
	25-33225- 23			1	
	25-33225- 24			1	
	25-33225- 25			1	
	25-33225- 27			1	
	25-33225- 28			1	
	25-33225- 29			1	
	25-33225- 30			1	
	25-33225- 31			1	
	25-33225- 32			1	
	25-33225- 33			1	
	25-33225- 35			1	
	25-33225- 37			1	
	25-33225- 38			1	
	25-33225- 39			1	
	25-33225- 41			1	
	25-33225- 42			1	
	25-33225- 43			1	
	25-33225- 44			1	
	25-33225- 45			1	
	25-33225- 47			1	
	25-33225- 48			1	
	25-33225- 49			1	
	25-33225- 50			1	
	25-33225- 51			1	
	25-33225- 53			1	
	25-33226- 1			1	
	25-33226- 3			1	
	25-33226- 5			1	
	25-33226- 6			1	
	25-33226- 7			1	
	25-33226- 8			1	
	25-33226- 9			1	
	25-33226- 10			1	
	25-33226- 11			1	
	25-33226- 12			1	
	25-33226- 13			1	
	25-33226- 14			1	
	25-33226- 15			1	
	25-33226- 16			1	
	25-33226- 17			2	
	25-33226- 19			2	
	25-33226- 21			1	
	25-33226- 23			1	
	25-33226- 24			1	
	25-33226- 25			1	
	25-33226- 27			4	
	25-33232- 1	M1		1	
	25-33232- 3	M1		1	
	25-33232- 5	M1		1	
	25-33240- 1	P1	142 - 1	1	

STOCK	PART NUMBER	SOURCE CODE	FIGURE & INDEX NO.	QTY. PER A/C	MICROFILM INDEX
	25-33240- 3	M1		1	
	25-33240- 5	M1		2	
	25-33240- 7	M1		1	
	25-33240- 8	M1		1	
	25-33240- 9	M1		1	
	25-33240- 11	M1		1	
	25-33240- 12	M1		1	
	25-33240- 13	M1		1	
	25-33240- 14	M1		1	
	25-33240- 15	M1		1	
	25-33240- 16	M1		1	
	25-33240- 17	M1		1	
	25-33240- 18	M1		1	
	25-33240- 19	M1		1	
	25-33240- 20	M1		1	
	25-33240- 23	M1		1	
	25-33240- 25	M1		1	
	25-33240- 27	M1		1	
	25-33240- 28	M1		1	
	25-33240- 29	M1		2	
	25-33240- 31	M1		1	
	25-33240- 33	M1		2	
	25-33240- 35	M1		1	
	25-33240- 37	M1		1	
	25-33240- 38	M1		1	
	25-33240- 39	M1		1	
	25-33240- 40	M1		1	
	25-33240- 41	M1		1	
	25-33240- 43	M1		2	
	25-33240- 49	M1		1	
	25-33240- 50	M1		1	
	25-33240- 51	M1		2	
	25-33240- 53	M1		1	
	25-33240- 54	M1		1	
	25-33240- 61	M1		1	
	25-33240- 62	M1		1	
	25-33240- 63	M1		1	
	25-33240- 64	M1		1	
	25-33240- 65	M1		2	
	25-33240- 67	M1		2	
	25-33240- 69			1	
	25-33240- 71			1	
	25-33240- 73			1	
	25-33240- 75			1	
	25-33240- 77			1	
	25-33240- 79			1	
	25-33240- 80			1	
	25-33240- 81			1	
	25-33240- 83			1	
	25-33240- 85			1	
	25-33241- 1	M1		1	
	25-33241- 7	M1		2	
	25-33241- 9			1	
	25-33241- 11			1	
	25-33242- 1	M1		1	
	25-33242- 11			1	
	25-33242- 13			1	
	25-33242- 15			1	
	25-33242- 16			1	
	25-33242- 17			1	
	25-33242- 18			1	
	25-33243- 1	M1		1	
	25-33243- 3	M1		1	
	25-33243- 5	M1		1	
	25-33243- 11			1	
	25-33243- 12			1	
	25-33243- 13			1	
	25-33244- 1	M1		1	
	25-33244- 3	M1		1	
	25-33244- 5	M1		1	
	25-33244- 6	M1		1	
	25-33244- 7	M1		1	
	25-33244- 8	M1		1	
	25-33244- 11	M1		2	
	25-33244- 13	M1		2	
	25-33244- 15	M1		2	
	25-33244- 17			1	
	25-33245- 1	M1		1	
	25-33245- 3	M1		1	
	25-33245- 5	M1		1	
	25-33245- 6	M1		1	
	25-33245- 9	M1		2	
	25-33245- 11	M1		1	
	25-33245- 13			1	
	25-33246- 1	M1		1	
	25-33246- 3	M1		1	
	25-33246- 5	M1		1	
	25-33246- 6	M1		1	
	25-33246- 9			1	
	25-33247- 1	M1		1	
	25-33247- 3	M1		1	
	25-33247- 7	M1		1	
	25-33247- 8	M1		1	
	25-33247- 9	M1		1	
	25-33247- 11			1	
	25-33248- 1	M1		1	

STOCK	PART NUMBER	SOURCE CODE	FIGURE & INDEX NO.	QTY. PER A/C	MICROFILM INDEX
	25-33248- 3	M1		1	
	25-33248- 7	M1		1	
	25-33248- 8	M1		1	
	25-33248- 9	M1		1	
	25-33248- 11			1	
	25-33249- 1	M1		1	
	25-33249- 3	M1		1	
	25-33249- 7	M1		1	
	25-33249- 8	M1		1	
	25-33249- 9	M1		1	
	25-33249- 11			1	
	25-33250- 1	M1		1	
	25-33250- 3	M1		1	
	25-33250- 9			1	
	25-33250- 11			1	
	25-33251- 1	M1		1	
	25-33251- 2	M1		1	
	25-33251- 3	M1		1	
	25-33251- 4	M1		1	
	25-33251- 5	M1		1	
	25-33251- 6	M1		1	
	25-33253- 1	M1		1	
	25-33253- 3	M1		1	
	25-33253- 4			1	
	25-33253- 5	M1		1	
	25-33253- 6	M1		1	
	25-33253- 7	M1		1	
	25-33253- 9	M1		1	
	25-33253- 11	M1		1	
	25-33253- 13	M1		2	
	25-33253- 15	M1		2	
	25-33253- 17	M1		1	
	25-33253- 18	M1		1	
	25-33253- 19			1	
	25-33253- 21			1	
	25-33254- 1	M1		1	
	25-33254- 5	M1		2	
	25-33254- 7			1	
	25-33255- 1			1	
	25-33255- 5	M1		2	
	25-33255- 7	M1		2	
	25-33255- 9			1	
	25-33257- 1	M1		1	
	25-33257- 3	M1		1	
	25-33257- 5			1	
	25-33257- 7			1	
	25-33258- 1	M1		1	
	25-33258- 3	M1		1	
	25-33258- 7	M1		1	
	25-33258- 8	M1		1	
	25-33258- 9			1	
	25-33258- 11			1	
	25-33259- 1	M1		1	
	25-33259- 7			1	
	25-33259- 9			1	
	25-33260- 1	P1	138 - 10 143 -	1	
	25-33260- 3	M1		1	
	25-33260- 5	M1		1	
	25-33260- 6	M1		1	
	25-33260- 7	M1		1	
	25-33260- 13	M1		1	
	25-33260- 14	M1		1	
	25-33260- 17	M1		1	
	25-33260- 18	M1		1	
	25-33260- 19	M1		1	
	25-33260- 21	M1		1	
	25-33260- 23	M1		2	
	25-33260- 25	M1		1	
	25-33260- 29	M1		2	
	25-33260- 35			1	
	25-33260- 37			1	
	25-33260- 39			1	
	25-33260- 41			1	
	25-33260- 43			1	
	25-33260- 45			1	
	25-33260- 47			1	
	25-33260- 49			1	
	25-33260- 51			1	
	25-33260- 53			1	
	25-33260- 54			1	
	25-33260- 55			1	
	25-33260- 56			1	
	25-33261- 3	M1		1	
	25-33262- 3	M1		1	
	25-33262- 3C	M1		1	
	25-33262- 4	M1		1	
	25-33262- 4C	M1		1	
	25-33265- 1	M1		1	
	25-33265- 3	M1		1	
	25-33265- 7			1	
	25-33266- 1	M1		1	
	25-33266- 2	M1		1	
	25-33266- 3	M1		1	
	25-33266- 4	M1		1	
	25-33266- 5	M1		1	
	25-33266- 6	M1		1	
	25-33269- 1	M1		1	
	25-33269- 5	M1		1	
	25-33269- 6	M1		1	
	25-33269- 7	M1		1	
	25-33269- 9	M1		1	
	25-33269- 10	M1		1	
	25-33269- 11	M1		1	
	25-33269- 12	M1		1	
	25-33269- 13	M1		1	
	25-33269- 17	M1		1	
	25-33269- 21	M1		1	
	25-33269- 31	M1		1	
	25-33269- 35	M1		1	
	25-33269- 37	M1		1	
	25-33269- 39	M1		1	
	25-33269- 41			1	
	25-33269- 43			2	
	25-33269- 45			2	
	25-33269- 47			2	
	25-33269- 49			2	
	25-33269- 51			2	
	25-33269- 53			2	
	25-33269- 55			2	
	25-33269- 57			2	
	25-33269- 59			2	
	25-33269- 61			2	
	25-33269- 63			2	
	25-33269- 65			2	
	25-33269- 67			2	
	25-33271- 1	M1		1	
	25-33271- 2	M1		1	
	25-33271- 9			1	
	25-33271- 10			1	
	25-33271- 11			1	
	25-33271- 12			1	
	25-33271- 13			1	
	25-33271- 14			1	
	25-33272- 1	M1		1	
	25-33272- 2	M1		1	
	25-33272- 7	M1		1	
	25-33272- 8	M1		1	
	25-33272- 9	M1		1	
	25-33272- 10	M1		1	
	25-33272- 11	M1		1	
	25-33272- 12	M1		1	
	25-33272- 13			2	
	25-33272- 14			2	
	25-33272- 15			4	
	25-33272- 17			1	
	25-33272- 18			1	
	25-33272- 19			2	
	25-33273- 1	M1		1	
	25-33273- 3	M1		1	
	25-33273- 4	M1		1	
	25-33273- 5	M1		14	
	25-33273- 7	M1		1	
	25-33273- 9	M1		14	
	25-33273- 11	M1		1	
	25-33273- 13	M1		1	
	25-33275- 1			1	
	25-33275- 3			1	
	25-33275- 5			1	
	25-33275-301			1	
	25-33276- 3			1	
	25-33277- 1		143 - 5	1	
	25-33277- 3			2	
	25-33277- 5			2	
	25-33277- 7			12	
	25-33277- 9			2	
	25-33277- 11			12	
	25-33277- 13			2	
	25-33278- 3		140 - 63	2	
	25-33278- 3C			2	
	25-33278- 4		140 - 64	2	
	25-33278- 4C			2	
	25-33279- 1		140 - 36	1	
	25-33279-1-3			1	
	25-33279-1-3P			1	
	25-33280- 3			1	
	25-33280- 3P			1	
	25-33281- 1			1	
	25-33281- 3			1	
	25-33281- 5			1	
	25-33281- 7			1	
	25-33281- 9			1	
	25-33281- 10			1	
	25-33281- 11			1	
	25-33281- 13			1	
	25-33281- 15			2	
	25-33281- 17			1	
	25-33281- 19			1	
	25-33281- 21			1	
	25-33281- 23			1	
	25-33282- 1		140 - 37	1	
	25-33282-1-3			1	

STOCK	PART NUMBER	SOURCE CODE	FIGURE & INDEX NO.	QTY. PER A/C	MICROFILM INDEX
	25-33282-1-3P			1	
	25-33283- 1			1	
	25-33283- 3			1	
	25-33283- 5			1	
	25-33283- 7			1	
	25-33283- 8			1	
	25-33283- 9			1	
	25-33283- 10			1	
	25-33284- 1			1	
	25-33284- 3			1	
	25-33284- 5			1	
	25-33284- 7			1	
	25-33284- 8			1	
	25-33284- 9			2	
	25-33285- 3			36	
	25-33285- 5			16	
	25-33285- 7			46	
	25-33286- 1			1	
	25-33286- 3			1	
	25-33286- 5			1	
	25-33286- 7			1	
	25-33286- 9			1	
	25-33286- 11			1	
	25-33286- 13			2	
	25-33286- 15			1	
	25-33286- 16			1	
	25-33286- 17			1	
	25-33286- 19			1	
	25-33286- 21			1	
	25-33286- 23			2	
	25-33286- 25			2	
	25-33287- 1			1	
	25-33287- 3			2	
	25-33287- 5			1	
	25-33287- 7			1	
	25-33287- 8			1	
	25-33287- 9			1	
	25-33287- 10			1	
	25-33287- 11			1	
	25-33288- 3			1	
	25-34001- 1	*	138 - 4 145 -	1	
	25-34001- 2	*	138 - 4 145 -	1	
R82MDA-	25-34002- 1	P1	145 - 26	1	G-122 G-123
R82MDA-	25-34002- 2	P1	145 - 26	1	
	25-34002- 3	M1	145 -	1	
	25-34002- 4	M1	145 -	1	
	25-34002- 5	M1	145 -	1	
	25-34002- 6	M1	145 -	1	
	25-34002- 7	M1		1	
	25-34002- 8	M1		1	
	25-34002- 9	M1		1	
	25-34002- 10	M1		1	
	25-34002- 11	M1		1	
	25-34002- 12	M1		1	
	25-34002- 13	M1		1	
	25-34002- 14	M1		1	
	25-34002- 17	M1		1	
	25-34002- 18	M1		1	
	25-34002- 19	M1		1	
	25-34002- 20	M1		1	
	25-34002- 21	M1		1	
	25-34002- 22	M1		1	
	25-34002- 37	M1		1	
	25-34002- 38	M1		1	
	25-34002- 39	M1		1	
	25-34002- 40	M1		1	
	25-34002- 41	M1		1	
	25-34002- 42	M1		1	
	25-34002- 43	M1		1	
	25-34002- 44	M1		1	
	25-34002- 47	M1		1	
	25-34002- 48	M1		1	
	25-34002- 53	M1		1	
	25-34002- 54	M1		1	
	25-34002- 57	M1		1	
	25-34002- 58	M1		1	
	25-34002- 59	M1		1	
	25-34002- 60	M1		1	
	25-34002- 61	M1		1	
	25-34002- 62	M1		1	
	25-34002- 63	M1		1	
	25-34002- 64	M1		1	
	25-34002- 65	M1		1	
	25-34002- 66	M1		1	
	25-34002- 67	M1		1	
	25-34002- 68	M1		1	
	25-34002- 69	M1		1	
	25-34002- 70	M1		1	
	25-34002- 71	M1		1	
	25-34002- 72	M1		1	
	25-34002- 73	M1		1	
	25-34002- 74	M1		1	
	25-34002- 75	M1		1	
	25-34002- 76	M1		1	
	25-34002- 77	M1		1	
	25-34002- 78	M1		1	
	25-34002- 79	M1		1	
	25-34002- 80	M1		1	
	25-34002- 81	M1		1	
	25-34002- 82	M1		1	
	25-34002- 83	M1		1	
	25-34002- 84	M1		1	
	25-34002- 85	M1		1	
	25-34002- 86	M1		1	
	25-34002- 87	M1		1	
	25-34002- 88	M1		1	
	25-34002- 89	M1		1	
	25-34002- 90	M1		1	
	25-34002- 91	M1		1	
	25-34002- 92	M1		1	
	25-34002- 93	M1		1	
	25-34002- 94	M1		1	
	25-34002- 95	M1		1	
	25-34002- 96	M1		1	
	25-34002- 97	M1		1	
	25-34002- 99	M1		1	
	25-34002-103	M1		1	
	25-34002-109	M1		1	
	25-34002-110	M1		1	
	25-34002-113	M1		1	
	25-34002-114	M1		1	
	25-34002-115	M1		1	
	25-34002-116	M1		1	
	25-34002-117	M1		4	
	25-34002-119	M1		4	
	25-34002-121	M1		8	
	25-34002-123	M1		1	
	25-34002-124	M1		1	
	25-34002-125	M1		1	
	25-34002-126	M1		1	
	25-34002-127	M1		1	
	25-34002-128	M1		1	
	25-34002-129	M1		2	
	25-34002-130	M1		2	
	25-34002-131	M1		2	
	25-34002-133	M1		2	
	25-34002-135			1	
	25-34002-136			1	
	25-34002-137			1	
	25-34002-138			1	
	25-34002-139			1	
	25-34002-140			1	
	25-34002-141			2	
	25-34002-142			2	
R82MDA-	25-34003- 3	P1	145 - 28	2	
	25-34004- 3F	X1		2	B-550
	25-34009- 1	M1	145 -	1	
	25-34009- 2	M1	145 -	1	
	25-34009- 5	M1		1	
	25-34009- 6	M1		1	
	25-34010- 1	M1	145 -	1	
	25-34010- 2	M1	145 -	1	
	25-34010- 5	M1		1	
	25-34010- 6	M1		1	
R82MDA-	25-35001- 1	P1	45 - 1 51 -	1	XA-231
	25-35001- 3	M	51 - 47	1	
	25-35001- 5	M	51 - 44	1	
	25-35001- 7	M	51 - 33	1	
	25-35001- 9	M	51 - 37	2	
	25-35001- 11	M	51 - 30	2	
	25-35001- 13	M	51 - 45	1	
R82MDA-	25-35002- 1	P1	44 - 1 53 -	1	
	25-35002- 3	M	53 - 12	1	
	25-35002- 5	M	53 - 13	2	
	25-35002- 7	M	53 - 14	1	
	25-35002- 9	M	53 - 1	1	
	25-35002- 11			1	
	25-35002-301			1	
	25-35003- 1	M	44 - 9 54 -	1	G-124 G-125
	25-35006- 3	M1	51 - 27	1	
	25-35006- 5	M1	51 - 28	1	
	25-35006- 7	X1	45 - 3	1	
	25-35006- 8	X1	45 - 4	1	
	25-35006- 9	M1		1	
	25-35006- 11	M1		1	
	25-35006- 13	X1		1	
	25-35006- 14	X1		1	
	25-35006- 15	M	45 - 11	1	
	25-35006- 16	M	45 - 12	1	
R82MDA-	25-35007- 1	P1	51 - 47	1	
	25-35007- 3	X1		1	
	25-35007- 5	X1		1	
	25-35007- 6	X1		1	
	25-35007- 7	X1		1	
	25-35007- 8	X1		1	
	25-35007- 9	X1		1	
	25-35007- 10	X1		1	

STOCK	PART NUMBER	SOURCE CODE	FIGURE & INDEX NO.	QTY. PER A/C	MICROFILM INDEX
	25-35007- 11	X1		1	
	25-35007- 12	X1		1	
	25-35007- 13	X1		1	
	25-35007- 14	X1		1	
	25-35007- 15	X1		1	
	25-35007- 16	X1		1	
	25-35007- 17	X1		1	
	25-35007- 19	X1		1	
	25-35007- 21	X1		1	
	25-35007- 23	X1		1	
	25-35008- 3	P1	53 - 91	1	
	25-35008- 5	X1	51 - 42	1	
	25-35009- 1		51 - 31	1	
	25-35009- 3	M1		2	
R82MDA-	25-35010- 1	P1	53 - 1	1	
	25-35010- 5	X1		1	
	25-35010- 6	X1		1	
	25-35010- 7	X1		1	
	25-35010- 8	X1		1	
	25-35010- 9	X1		1	
	25-35010- 10	X1		1	
	25-35010- 11			1	
	25-35010- 12	X1		1	
	25-35010- 13	X1		1	
	25-35010- 14	X1		1	
	25-35010- 15	X1		1	
	25-35010- 16	X1		1	
	25-35010- 17	X1		1	
	25-35010- 18	X1		1	
	25-35010- 19	X1		1	
	25-35010- 21	X1		1	
	25-35010- 23	X1		1	
	25-35010- 25	X1		1	
	25-35010- 27	X1		1	
	25-35010- 29	X1		1	
	25-35010- 31	X1		1	
	25-35010- 33	X1		1	
	25-35010- 34	X1		1	
	25-35010- 35	M1		1	
	25-35010- 37	M1		1	
	25-35010- 38	M1		1	
	25-35010- 39	M1		1	
	25-35010- 41	M		1	
	25-35010- 43			1	
	25-35010- 45			1	
	25-35010- 46			1	
	25-35010-301			1	
	25-35012- 1	M1	53 - 87	1	
	25-35012- 2	M1	53 - 88	1	
	25-35012- 3	M1		1	
	25-35012- 4	M1		1	
	25-35012- 7			1	
	25-35012- 8			1	
	25-35012- 9	M1		2	
	25-35012- 11	M1	53 - 90	1	
	25-35012- 15	M1		1	
	25-35012- 16	M1		1	
	25-35012- 17	M1		2	
	25-35012- 18	M1		2	
	25-35013- 1	*		1	
	25-35013- 3	*	53 -	1	
	25-35013- 5	M1		1	
	25-35013- 7	M1		1	
	25-35013- 9	M1		1	
	25-35013- 11	M1		1	
	25-35013- 13	M1		1	
	25-35013- 15	M1		1	
	25-35013- 17	M1		1	
	25-35013- 18	M1		1	
	25-35013- 19	M1		1	
	25-35013- 20	M1		1	
	25-35013- 21	M1		1	
	25-35013- 23	M1		2	
	25-35013- 25	M1		1	
	25-35013- 27	M1		1	
	25-35013- 29	M1		2	
	25-35014- 1	M1	53 - 15	1	
	25-35014- 3	M1		1	
	25-35014- 5	M1		1	
	25-35014- 7	M1		1	
	25-35014- 8	M1		1	
	25-35014- 9	M1		1	
	25-35014- 11	M1		1	
	25-35014- 12	M1		1	
	25-35014- 13	M1		1	
	25-35014- 15	M1		1	
	25-35014- 16	M1		1	
	25-35014- 17	M1		1	
	25-35014- 18	M1		1	
	25-35014- 19	M1		1	
	25-35014- 20	M1		1	
	25-35014- 21			1	
R82MDA-	25-35015- 1	P1	53 - 61	1	D-378
R82MDA-	25-35016- 1	P1	44 - 2	1	G-126
	25-35016- 3	X1		1	
	25-35016- 5	X1		1	
	25-35016- 7	X1		1	
	25-35017- 5		54 - 53	1	A-325
	25-35017- 7			1	
	25-35018- 3	M1	45 - 47	1	B-551
	25-35019- 3	M1	54 - 1	1	C-579
	25-35021- 3	M1	54 - 55	1	A-326
	25-35022- 1	M1	54 - 39	1	C-580
	25-35023- 3	M1	54 - 56	1	C-581
	25-35024- 3	M1	54 - 44	1	C-582
	25-35025- 7	M1	51 - 25	1	
	25-35025- 9		51 - 22	1	
	25-35025- 10		51 - 23	1	
	25-35025- 11			1	
	25-35025- 12			1	
	25-35026- 3	M1	45 - 2	4	
	25-35027- 3	M1	53 - 83	1	
	25-35027- 4	M1	53 - 84	1	
	25-35028- 3	M1	54 - 49	1	A-327
R82MDA-	25-35029- 3	P1	53 - 17	1	
	25-35029- 3C	X1		1	
	25-35030- 3	M1	53 - 59	1	A-328
	25-35031- 3	M1	54 - 63	1	B-552
	25-35032- 1	X2	53 - 48	1	C-583
	25-35034- 3	M1	54 - 41	1	A-329
R82MDA-	25-35035- 3	P1	53 - 25	1	
R82MDA-	25-35035- 4	P1	53 - 26	1	
	25-35035-3-4C	X1		2	
	25-35036- 3	M1	54 - 21	1	B-553
	25-35036- 5	M1	54 - 13	1	
	25-35037- 3	M1	54 - 45	1	C-584
	25-35038- 3	M1	54 - 32	1	B-554
	25-35038- 5	M1	54 - 28	1	
	25-35039- 3	M1	54 - 76	1	C-585
	25-35040- 3	M1	54 - 78	1	B-555
	25-35041- 3	X1	53 - 60	1	C-586
	25-35042- 1	X1	53 - 50	1	B-556
	25-35042- 3	X1		1	
	25-35043- 3	M1	53 - 56	2	A-330
	25-35044- 3			1	C-587
	25-35044- 3C			1	
	25-35044- 4			1	
	25-35044- 4C			1	
R82MDA-	25-35044- 5	P1	53 - 85	1	
	25-35044- 5C	X1		1	
R82MDA-	25-35044- 6	P1	53 - 86	1	
	25-35044- 6C	X1		1	
	25-35045- 3F	X1		1	C-588
	25-35046- 3	M1	48 - 30	10	A-331
			53 - 20		
			54 - 66		
	25-35048- 3	M1	54 - 57	1	B-557
	25-35049- 3	M1	53 - 52	1	A-332
	25-35051- 1	A	73 - 13	1	C-589
			86 -		
R82MDA-	25-35052- 3	P1	86 - 2	1	B-558
	25-35052- 3C	X1		1	
	25-35053- 5	M1	86 - 5	1	B-559
	25-35055- 3	M1	86 - 7	1	A-43
	25-35056- 1	*	73 -	1	B-560
	25-35057- 3	X1	51 - 39	1	XA-99
	25-35057- 3C	X1		1	
	25-35057- 4	X1	51 - 40	1	
	25-35057- 4C	X1		1	
	25-35058- 3	M1	53 - 67	1	
	25-35059- 1	M1	53 - 21	1	
	25-35059- 3	M1		1	
	25-35061- 3	M1	53 - 18	1	
	25-35062- 3F	M1		1	G-127
R82MDA-	25-35063- 3	P1	53 - 22	1	
	25-35064- 7	M1		1	XA-100
	25-35064- 8	M1		1	
	25-35065- 3	M1	53 - 81	2	
	25-35065- 4	M1	53 - 82	2	
	25-35066- 7	M1	53 - 23	1	
	25-35066- 8	M1	53 - 23	1	
	25-35068- 3	M1		2	
	25-35069- 5	M1		1	
	25-35069- 6	M1		1	
	25-35069- 7	M1		1	
	25-35069- 8	M1		1	
	25-35069- 9	M1		1	
	25-35069- 10	M1		1	
	25-35069- 11	M1		1	
	25-35069- 12	M1		1	
	25-35069- 13	M1		1	
	25-35069- 14	M1		1	
	25-35069- 15	M1		2	
	25-35069- 17	M1		6	
	25-35069- 19	M1		1	
	25-35069- 20	M1		1	
	25-35069- 21	M1		1	
	25-35069- 22	M1		1	
	25-35069- 23	M1		1	
	25-35069- 24	M1		1	
	25-35070- 3	M1	53 - 68	2	
	25-35071- 1	M1	53 - 29	1	

STOCK	PART NUMBER	SOURCE CODE	FIGURE & INDEX NO.	QTY. PER A/C	MICROFILM INDEX
	25-35071- 3	M1	53 - 30	1	
R82MDA-	25-35072- 1	P	53 - 77	2	
	25-35072- 3	M1		2	
R82MDA-	25-35073- 1	P1	53 - 27	1	
	25-35074- 3	M1		2	
	25-35075- 3	M1		1	
	25-35075- 4	M1		1	
	25-35076- 3	X1		1	
	25-35077- 3	M1	73 - 11	1	A-334
	25-35078- 3	M1	54 - 93	1	C-590
	25-35079- 3	M1	54 - 62	1	B-561
	25-35080- 3	M1	54 - 19	2	B-562
			54 - 60		
			59 - 1		
	25-35081- 1	M1	86 - 12	1	B-563
	25-35081- 3	M1		1	
	25-35082- 3	M	54 - 15	2	A-335
	25-35084- 3	M1	54 - 73	1	A-336
	25-35085- 5			1	B-565
	25-35085-301		54 - 36	1	
	25-35086- 3	M1		1	A-337
	25-35087- 3	M1	54 - 6	3	A-338
			54 - 26		
			54 - 68		
	25-35088- 3	M1	54 - 37	1	A-339
	25-35089- 3	M1		1	A-340
	25-35090- 3	M1	53 - 19	1	
	25-35091- 1	M1	53 -	1	
	25-35091- 3	M1	53 - 44	1	
	25-35091- 7	M1		1	
	25-35091- 11	M1	53 - 45	1	
	25-35091- 13	M1		1	
	25-35092- 1	M1	51 - 46	1	
	25-35092- 3	M1		1	
	25-35093- 1	P1	53 - 72	1	
	25-35093- 3	X1		1	
	25-35093- 3C	X1		1	
	25-35094- 3	M1	53 - 74	1	
	25-35095- 3	M1	51 - 24	6	
	25-35095- 5	M1		1	
	25-35095- 6	M1		1	
	25-35095- 7	M1		6	
	25-35095- 9	M1		6	
	25-35096- 3	M1	51 -	1	
	25-35096- 4	M1	51 - 38	1	
	25-35097- 5	M1		2	
	25-35098- 3	M1	51 - 34	1	
	25-35098- 4	M1	51 - 35	2	
	25-35099- 5	M1	86 - 9	1	A-341
	25-35100- 3	M1	86 - 11	1	A-342
	25-35101- 3	M1	54 - 11	1	A-343
	25-35102- 3	M1	53 - 75	1	
	25-35103- 1		51 - 31	1	
	25-35103- 3			1	
	25-35103- 5			1	
	25-35103- 7			1	
	25-35103- 8			1	
	25-37001- 1			1	
	25-37001- 3			1	
	25-37002- 1			1	
	25-37002- 3			1	
	25-37002- 5			1	
	25-37002- 7			1	
	25-37002- 9			1	
	25-37002- 11			1	
	25-37002- 13			1	
	25-37002- 15			1	
	25-37002- 17			1	
	25-37002- 19			2	
	25-37002- 21			1	
	25-37002- 23			1	
	25-37002- 25			1	
	25-37002- 26			1	
	25-37002- 27			1	
	25-37002- 29			1	
	25-37002- 31			1	
	25-37002- 33			1	
	25-37002- 34			1	
	25-37002- 35			1	
	25-37002- 36			1	
	25-37002- 37			1	
	25-37002- 38			1	
	25-37002- 39			2	
	25-37002- 41			1	
	25-37002- 42			1	
	25-37002- 43			1	
	25-37002- 44			1	
	25-37003			1	
	25-37004- 1			1	
	25-37004- 3			1	
	25-37004- 5			1	
	25-37004- 7			1	
	25-37004- 9			1	
	25-37004- 11			1	
	25-37004- 13			1	
	25-37004- 15			1	

STOCK	PART NUMBER	SOURCE CODE	FIGURE & INDEX NO.	QTY. PER A/C	MICROFILM INDEX
	25-37004- 17			1	
	25-37004- 19			1	
	25-37004- 21			1	
	25-37004- 23			1	
	25-37004- 25			1	
	25-37004- 27			1	
	25-37005- 1			1	
	25-37005- 3			1	
	25-37005- 5			1	
	25-37005- 7			1	
	25-37005- 8			1	
	25-37005- 9			1	
	25-37005- 11			1	
	25-37005- 13			1	
	25-37005- 14			1	
	25-37005- 15			1	
	25-37005- 16			1	
	25-37005- 17			1	
	25-37005- 19			1	
	25-37005- 21			2	
	25-37005- 23			1	
	25-37005- 25			1	
	25-37005- 27			1	
	25-37005- 29			1	
	25-37005- 30			1	
	25-37005- 31			1	
	25-37005- 32			1	
	25-37005- 33			1	
	25-37006			1	
	25-37009- 3			1	
	25-37009- 4			1	
	25-37010- 3			1	
	25-37010- 4			1	
	25-37011- 3			2	
	25-37012- 3			1	
	25-37013- 3			1	
	25-37013- 4			1	
	25-37014- 3			1	
	25-37014- 4			1	
	25-37015- 1			1	
	25-37015- 3			1	
	25-37016- 1			1	
	25-37016- 3			1	
	25-37016- 5			1	
	25-37016- 7			1	
	25-37016- 9			1	
	25-37016- 11			1	
	25-37016- 13			1	
	25-37016- 15			1	
	25-37016- 16			1	
	25-37016- 17			1	
	25-37016- 19			1	
	25-37016- 21			1	
	25-37017- 3			1	
	25-37017- 4			1	
	25-37018- 3			1	
	25-37018- 4			1	
	25-37019- 3			1	
	25-37019- 4			1	
	25-37024- 3			1	
	25-37024- 4			1	
	25-37025- 3			1	
	25-37025- 4			1	
	25-37027- 3			1	
	25-37027- 4			1	
	25-37028- 3			1	
	25-37029- 1			1	
	25-37029- 3			1	
	25-37029- 5			1	
	25-37031- 3			2	
	25-37032- 3			2	
	25-37033- 3			1	
	25-37036- 1			1	
	25-37036- 3			1	
	25-37036- 5			1	
	25-37036- 7			1	
	25-37036- 9			1	
	25-37037- 1			1	
	25-37037- 3			1	
	25-37037- 5			1	
	25-37037- 7			1	
	25-37037- 9			1	
	25-37037- 11			1	
	25-37037- 13			1	
	25-37037- 15			1	
	25-37037- 17			1	
	25-37037- 19			1	
	25-37042- 3			2	
	25-37042- 4			2	
	25-37043- 1			1	
	25-37043- 3			1	
	25-37043- 5			1	
	25-37044- 1			1	
	25-37044- 3			1	
	25-37044- 5			1	
	25-37045- 1			1	

STOCK	PART NUMBER	SOURCE CODE	FIGURE & INDEX NO.	QTY. PER A/C	MICROFILM INDEX
	25-37045- 3			1	
	25-37045- 5			1	
	25-37049- 1			1	
	25-37049- 3			1	
	25-37049- 5			1	
	25-37051- 1			1	
	25-37051- 3			1	
	25-37053- 3			1	
	25-37056			1	
	25-37066- 1			1	
	25-37066- 3			1	
	25-37066- 5			1	
	25-37066- 7			1	
	25-37066- 9			1	
	25-37066- 11			1	
	25-37072- 1			1	
	25-37072- 3			1	
	25-37075- 1			1	
	25-37075- 5			1	
	25-37075- 7			1	
	25-37077- 3			1	
	25-39072- 7			1	
	25-41000- 1	*	178 -	1	XA-235
	25-41000- 2	*	178 -	1	
	25-41000-301	*	178 -	1	
	25-41000-302	*	178 -	1	
	25-41000-303			1	
	25-41000-304			1	
	25-41001- 1	*	178 - 73	2	G-128
	25-41001- 3	*	178 - 76	2	
	25-41003- 3F	X1		4	C-591
R82MDA-	25-41004- 3	P1	178 - 55	4	C-592
	25-41005- 3F	X1		2	C-593
R82MDA-	25-41006- 3	P1	178 - 52	2	C-594
	25-41008- 3F	X1		2	C-595
R82MDA-	25-41008- 5	P1	179 - 19	2	
R82MDA-	25-41010- 1	P1	18 - 76	2	B-566
R82MDA-	25-41010- 2	P1	18 - 76	2	
	25-41010- 3	X1		2	
	25-41010- 4	X1		2	
R82MDA-	25-41011- 1	P1	180 - 48	2	C-596
	25-41011- 3	X1	180 - 54	2	
	25-41011- 3F	X1		2	
	25-41011- 5	M1	180 - 52	2	
R82MDA-	25-41012- 1	P	178 - 29	4	C-597
	25-41012- 3	X1		2	
	25-41012- 5	X1		4	
	25-41012- 7	X1	178 -	2	
R82MDA-	25-41013- 3	P	178 - 41	2	A-346
R82MDA-	25-41014- 3	P	178 - 39	4	A-347
R82MDA-	25-41015- 1	P1	178 - 26	2	B-567
	25-41015- 3	X1	178 -	2	
	25-41015- 7	X1	178 -	2	
	25-41016- 3	P1		2	B-568
	25-41016- 5		18 - 83	4	
R82MDA-	25-41017- 3	P	182 - 25	2	
	25-41020- 1	A	178 - 43	1	G-129
	25-41020- 2	A	178 - 43	1	
R82MDA-	25-41025- 1	P1	178 - 45	1	C-598
R82MDA-	25-41025- 2	P1	178 - 45	1	
	25-41025- 3	X1		1	
	25-41025- 4	X1		1	
	25-41025-1-3C	X1		1	
	25-41025-2-4C	X1		1	
	25-41026- 1	M1	178 - 25	2	XA-61
	25-41026- 5	M1		2	
	25-41026- 9	M1		2	
	25-41027- 5	M1		2	A-349
	25-41028- 1	M1	178 - 12	1	
	25-41028- 2	M1	178 - 12	1	
	25-41028- 3	M1		1	
	25-41028- 4	M1		1	
	25-41045- 1	A	178 -	2	G-130
	25-41045- 3	A	178 -	1	
	25-41045- 4	A	178 -	1	
R82MDA-	25-41051- 5	P	178 - 57	2	A-350
R82MDA-	25-41052- 3	P	178 - 64	2	A-351
R82MDA-	25-41053- 3	P	178 - 56	2	A-352
	25-41054- 3	M1	178 - 22	1	B-570
	25-41054- 4	M1	178 - 22	1	
	25-41055- 1	A	178 - 15	2	A-353
	25-41055- 3	M1	178 - 17	2	
	25-41056- 3	M1		1	B-571
	25-41056- 4	M1		1	
	25-41057- 3	M1	183 - 18	1	B-572
	25-41057- 4	M1	183 - 18	1	
	25-41059- 1	M1	178 - 11	2	A-45
	25-41059- 2	M1	178 - 11	2	
	25-41059- 3	M1		4	
	25-41060- 3	M1		2	A-354
	25-41061- 1	M1		2	XA-62
	25-41061- 2	M1		2	
	25-41061- 5	M1		2	
	25-41061- 6	M1		2	
	25-41062- 3	M1	178 - 67	10	A-355
	25-41063- 3	M1	178 - 21	2	
	25-41064- 3	M1	178 - 23	1	
	25-41064- 4	M1	178 - 23	1	
	25-41065- 1	M1	178 - 38	2	
	25-41065- 3	M1		2	
	25-41066- 1	M1	178 -	1	
	25-41066- 2	M1	178 -	1	
	25-41066- 3	M1	178 - 37	1	
	25-41066- 4	M1	178 - 37	1	
	25-41066- 5	M1	178 - 35	2	
	25-41066- 7	M1		2	
	25-41066- 9	M1		2	
	25-41066- 11	M1		8	
	25-41066- 13	M1		2	
	25-41066- 15	M1		2	
	25-41066- 17	M1		2	
	25-41067- 3	M1	178 - 33	1	
	25-41067- 4	M1	178 - 33	1	
	25-41068- 1	M1	178 -	1	
	25-41068- 2	M1	178 -	1	
R82MDA-	25-41069- 3	P	28 - 43	2	
			178 - 77		
	25-41070- 3		28 - 43	2	
			178 - 77		
	25-41071- 3			2	
	25-41200- 1	A	178 - 79	1	G-131
			179 -		
	25-41200- 2	A	178 - 79	1	
			179 -		
R82MDA-	25-41200- 3	P1	179 - 24	1	
			180 -		
R82MDA-	25-41200- 4	P1	179 - 24	1	
			180 -		
	25-41201- 3F	X1		1	G-132
	25-41201- 4F	X1		1	
	25-41204- 1	X2	180 -104	4	G-135
	25-41204- 3	X1		2	
	25-41204- 3F	X1		2	
	25-41204- 5	X1		2	
	25-41204- 7	X1		2	
	25-41204- 9	X1		4	
R82MDA-	25-41205- 1	P1	178 - 65	2	G-136
	25-41205- 3	X1		2	
	25-41205- 3F	X1		2	
R82MDA-	25-41207- 3	P1	178 - 69	2	C-599
			180 - 2		
	25-41207- 3F	X1		2	
R82MDA-	25-41209- 1	P1	180 - 28	2	XA-103
	25-41209- 3	X1		2	
	25-41209- 3F	X1		2	
R82MDA-	25-41211- 3	P1	180 - 97	2	
R82MDA-	25-41212- 3	P1	180 - 69	2	B-577
R82MDA-	25-41213- 1	P1	180 - 73	2	C-601
	25-41213- 3	X1	180 - 80	2	
	25-41213- 5	X1		2	
	25-41213- 7	X1		2	
	25-41213- 9	X1	180 - 80	2	
	25-41213- 11	X1		2	
	25-41213- 13	X1		2	
R82MDA-	25-41214- 1	P1	179 - 1	2	G-137
	25-41214- 3	X1		2	
	25-41214- 5	M		2	
R82MDA-	25-41216- 1	P1	178 - 62	2	C-602
	25-41216- 3	X1		2	
	25-41216- 3F	X1		2	
	25-41218- 5		180 - 45	2	C-603
	25-41218- 5F			2	
	25-41218- 7		180 - 45	2	
	25-41219- 3	X1	180 - 35	2	B-578
	25-41219- 3F	X1		2	
R82MDA-	25-41220- 3	P1	180 - 37	2	A-356
R82MDA-	25-41221- 1	P1	180 - 39	2	B-579
	25-41221- 5			2	
R82MDA-	25-41222- 1	P1	178 - 48	1	C-604
R82MDA-	25-41222- 2	P1	178 - 48	1	
	25-41222- 3	X1		1	
	25-41222- 3F	X1		2	
	25-41222- 4	X1		1	
R82MDA-	25-41223- 1	P1	178 - 58	2	
	25-41223- 3	X1		2	C-605
	25-41223- 3F			2	
R82MDA-	25-41224- 1	P1	180 - 87	1	
	25-41224- 2	P1	180 - 87	1	
	25-41224- 5	X1		1	XA-236
	25-41224- 6			1	
	25-41224-3-4F			2	
	25-41226- 1	X2	180 - 90	1	
	25-41226- 2	X2	180 - 90	1	
	25-41226- 5	X1		1	G-140
	25-41226- 6			1	
R82MDA-	25-41228- 3	P1	180 - 89	4	
R82MDA-	25-41234- 3	P1	180 - 57	4	B-580
R82MDA-	25-41235- 3	P1	180 - 62	2	B-581
R82MDA-	25-41236- 3	P1	180 - 7	2	
R82MDA-	25-41237- 3	P1	180 - 68	2	
	25-41238- 3F	X1		2	G-142
R82MDA-	25-41239- 1	P1	179 - 11	1	XA-237

STOCK	PART NUMBER	SOURCE CODE	FIGURE & INDEX NO.	QTY. PER A/C	MICROFILM INDEX
R82MDA-	25-41239- 2	P1	179 - 11	1	
	25-41239- 3			1	
	25-41239- 4			1	
	25-41240- 3	M1	179 - 15	4	
	25-41241- 3	M1	179 - 14	2	
	25-41241- 5	M1	179 - 5	4	
	25-41242- 3	M1	180 - 14	2	
	25-41243- 3	M1	179 - 4	4	
	25-41244- 3	M1	180 - 96	2	B-583
R82MDA-	25-41246- 3	P1	180 - 76	2	
R82MDA-	25-41247- 3	P1	180 -103	2	B-584
	25-41248- 1	P1	180 -106	2	
	25-41248- 7			2	
	25-41248- 9			2	
	25-41248-301		180 -106	2	
R82MDA-	25-41249- 3	P1	180 - 6	2	
R82MDA-	25-41250- 3	P1	178 - 71	2	
			180 - 4		
R82MDA-	25-41251- 3	P1	178 - 72	2	
			180 - 5		
	25-41252- 3	M1	180 - 10	4	A-48
R82MDA-	25-41253- 3	P1	180 - 18	2	A-365
R82MDA-	25-41254- 5	P	180 - 72	2	B-586
R82MDA-	25-41256- 1	P1	180 - 83	2	B-587
	25-41256- 3	X1		2	
	25-41257- 3	M1	180 - 13	2	A-366
	25-41258- 3	M1	178 - 68	4	A-49
			180 - 1		
	25-41259- 3		180 - 56	2	
	25-41260- 3		180 - 82	2	
R82MDA-	25-41263- 3		180 - 60	8	
R82MDA-	25-41264- 3		180 -101	2	
	25-41266- 3			2	A-369
	25-41266- 5		18 -	6	
R82MDA-	25-41267- 3		179 - 8	2	
R82MDA-	25-41268- 3		179 - 6	2	
	25-41269- 7		180 - 95	8	
	25-41270- 5		179 - 2	2	
R82MDA-	25-41271- 1		178 - 32	2	A-371
	25-41271- 3	X1		2	
	25-41272- 5		180 - 36	1	
	25-41272- 6		180 - 36	1	
R82MDA-	25-41272-301		180 -	1	
R82MDA-	25-41272-302		180 -	1	
	25-41273- 3		180 - 43	2	
R82MDA-	25-41274- 3	P	179 - 12	4	
			179 - 13		
R82MDA-	25-41275- 5		180 - 38	2	
R82MDA-	25-41276- 3		180 - 40	2	
R82MDA-	25-41277- 3		179 - 3	2	
	25-41278-1-3F	X1		2	G-144
	25-41279- 5		180 - 26	1	
	25-41279- 6		180 - 26	1	
	25-41280- 1		180 - 85	2	A-374
	25-41280- 3	M1		2	
	25-41280- 5			6	
R82MDA-	25-41281- 1		180 - 17	1	G-145
	25-41281- 2		180 - 17	1	
	25-41281- 3	X1		2	
	25-41282- 1		180 - 15	2	A-375
	25-41282- 3	M1		2	
	25-41283- 3		179 - 16	2	
	25-41284- 3		28 - 42	4	
			179 - 23		
	25-41285- 3		180 - 93	2	
	25-41286- 3		180 - 9	2	
R82MDA-	25-41402- 1		18 - 78	4	C-607
	25-41402- 3			2	
	25-41402- 3F	X1		4	
	25-41402- 5	X1		6	
	25-42100- 1	P1	178 - 5	1	G-147
			182 -		
	25-42100- 2	P1	178 - 5	1	
			182 -		
	25-42100- 3	X1		1	
	25-42100- 4	X1		1	
	25-42100- 5	X1		1	
	25-42100- 6	X1		1	
	25-42100- 7	X1		1	
	25-42100- 8	X1		1	
	25-42100- 9	M1		1	
	25-42100- 10	M1		1	
	25-42100- 11	M1		1	
	25-42100- 12	M1		1	
	25-42100- 13	M1		2	
	25-42100- 17	X1		2	
	25-42100- 21	M1	182 - 2	2	
			182 - 4		
	25-42100- 29	M1		1	
	25-42100- 30	M1		1	
	25-42100- 33	M1	182 - 21	2	
	25-42100- 35			1	
	25-42100- 36			1	
	25-42100- 37			1	
	25-42100- 38			1	
	25-42100- 39			1	
	25-42100- 40			1	
	25-42100- 41			2	
	25-42100- 42			2	
	25-42100- 43			1	
	25-42100- 44			1	
	25-42100- 45			2	
	25-42100- 47			1	
	25-42100- 48			1	
	25-42100- 49		182 - 11	4	
	25-42100- 51			1	
	25-42100- 52			1	
	25-42101- 1			1	
	25-42101- 2			1	
	25-42101- 3			1	
	25-42101- 4			1	
	25-42101- 5			1	
	25-42101- 6			1	
	25-42101- 7			1	
	25-42101- 8			1	
	25-42101- 9			1	
	25-42101- 10			1	
	25-42101- 11			1	
	25-42101- 12			1	
	25-42101- 13			1	
	25-42101- 14			1	
	25-42101- 15			1	
	25-42101- 16			1	
	25-42101- 17			1	
	25-42101- 18			1	
	25-42101- 19			1	
	25-42101- 20			1	
	25-42101- 21			2	
	25-42101- 23			2	
	25-42101- 25			2	
	25-42101- 27			2	
	25-42101- 29			2	
	25-42101- 31			1	
	25-42101- 32			1	
	25-42102- 1			2	
	25-42102- 5			2	
	25-42103- 3			1	
	25-42103- 4			1	
	25-42104- 3			1	
	25-42104- 4			1	
	25-42104- 5			1	
	25-42104- 6			1	
	25-42104- 7			1	
	25-42104- 8			1	
	25-42105- 3			2	
	25-42150			1	
	25-42155- 1	X1	182 - 6	1	G-148
	25-42155- 2	X1	182 - 6	1	
	25-42155- 3	X1		1	
	25-42155- 3F	X1		1	
	25-42155- 4	X1		1	
	25-42155- 4F	X1		1	
	25-42156- 1		182 - 8	2	
	25-42156- 3			2	
R82MDA-	25-42161- 1	P1	182 - 12	4	B-598
R82MDA-	25-42161- 3	P1	182 - 13	4	
	25-42161- 5	X1	182 - 20	8	
	25-42163- 3	M1	182 - 18	8	
	25-42164- 1			1	G-149
	25-42164- 2			1	
	25-42164- 3	X1	182 - 24	1	
	25-42164- 3F			2	
	25-42164- 4	X1	182 - 24	1	
	25-42164- 4F	X1		2	
	25-42164-1-5			1	
	25-42164-2-6			1	
	25-42165- 3	M1	182 - 27	2	A-378
	25-42165- 4	M1	182 - 28	2	
	25-42166- 3	M	182 - 29	2	
	25-42167- 3	M1		2	A-380
	25-42167- 5		182 - 22	4	
	25-42169- 3	M1	182 - 1	2	B-599
	25-42169- 4	M1	182 - 1	2	
	25-42172- 3		18 - 91	4	
R82MDA-	25-42200- 1	P1	183 - 29	1	XA-238 XA-239
R82MDA-	25-42200- 2	P1	183 - 29	1	
	25-42200- 3	X1		1	
	25-42200- 4	X1		1	
	25-42200- 5	X1		1	
	25-42200- 6	X1		1	
	25-42200- 7	M1		1	
	25-42200- 8	M1		1	
	25-42200- 9	M1		1	
	25-42200- 10	M1		1	
	25-42200- 11	M1		1	
	25-42200- 12	M1		1	
	25-42200- 13	M1		1	
	25-42200- 14	M1		1	
	25-42200- 15	M1		1	
	25-42200- 16	M1		1	
	25-42200- 17	M1		1	
	25-42200- 18	M1		1	

STOCK	PART NUMBER	SOURCE CODE	FIGURE & INDEX NO.	QTY. PER A/C	MICROFILM INDEX
	25-42200- 19	M1		1	
	25-42200- 20	M1		1	
	25-42200- 21	M1		1	
	25-42200- 22	M1		1	
	25-42200- 25	M1		1	
	25-42200- 26	M1		1	
	25-42200- 27	M1		1	
	25-42200- 28	M1		1	
	25-42200- 29	M1		1	
	25-42200- 30	M1		1	
	25-42200- 31	X1		1	
	25-42200- 32	X1		1	
	25-42200- 33	X1		1	
	25-42200- 34	X1		1	
	25-42200- 35	M1		1	
	25-42200- 36	M1		1	
	25-42200- 43	M1		1	
	25-42200- 44	M1		1	
	25-42200- 45	M1		1	
	25-42200- 46	M1		1	
	25-42200- 47	M1		1	
	25-42200- 48	M1		1	
	25-42200- 49			1	
	25-42200- 50			1	
	25-42200- 51			1	
	25-42200- 52			1	
	25-42200- 57	M1		1	
	25-42200- 58	M1		1	
	25-42200- 59	M1		1	
	25-42200- 60	M1		1	
	25-42200- 61	M1		1	
	25-42200- 62	M1		1	
	25-42200- 63	M1		1	
	25-42200- 64	M1		1	
	25-42200- 65	M1		1	
	25-42200- 66	M1		1	
	25-42200- 67	M1		1	
	25-42200- 68	M1		1	
	25-42200- 69	M1		1	
	25-42200- 70	M1		1	
	25-42200- 71	M1		1	
	25-42200- 72	M1		1	
	25-42200- 73			6	
	25-42200- 75			1	
	25-42200- 76			1	
	25-42200- 77			1	
	25-42200- 78			1	
	25-42200- 79			1	
	25-42200- 80			1	
	25-42200- 81			1	
	25-42200- 82			1	
	25-42200- 83			1	
	25-42200- 84			1	
	25-42200- 85			1	
	25-42200- 86			1	
	25-42200- 87			1	
	25-42200- 88			1	
	25-42200- 89			1	
	25-42200- 90			1	
	25-42200- 91			1	
	25-42200- 92			1	
	25-42200- 93			1	
	25-42200- 94			1	
	25-42200- 95			1	
	25-42200- 96			1	
	25-42200- 97			1	
	25-42200- 98			1	
	25-42200- 99			1	
	25-42200-100			1	
	25-42200-101			1	
	25-42200-102			1	
	25-42200-103			1	
	25-42200-104			1	
	25-42200-105			1	
	25-42200-106			1	
	25-42200-107			1	
	25-42200-108			1	
	25-42200-109			1	
	25-42200-110			1	
	25-42200-111			1	
	25-42200-112			1	
	25-42200-113			1	
	25-42200-114			1	
	25-42200-115			36	
	25-42200-117			1	
	25-42200-118			1	
	25-42201- 1	M1	14 -107	1	XA-240
	25-42201- 2	M1	14 -107	1	
	25-42201- 3	M1	14 -	1	
	25-42201- 4	M1	14 -	1	
	25-42201- 5	M1	14 -	1	
	25-42201- 6	M1	14 -	1	
	25-42201- 7	M1	183 - 37	2	
	25-42201- 9	M1	183 - 30	1	
	25-42201- 10	M1	183 - 30	1	
	25-42201- 11	M1		2	
	25-42201- 13	M1	14 -	10	
	25-42201- 15	M1	183 -	1	
	25-42201- 16	M1	183 -	1	
	25-42201- 17		14 -	10	
	25-42201- 19		183 - 31	4	
	25-42202- 3	M1	183 - 36	4	B-600
	25-42203- 1			1	
	25-42203- 2			1	
	25-42203- 3			1	
	25-42203- 4			1	
	25-42203- 5			1	
	25-42203- 6			1	
	25-42203- 7			1	
	25-42203- 8			1	
	25-42203- 9			1	
	25-42203- 10			1	
	25-42203- 11			1	
	25-42203- 12			1	
	25-42203- 13			1	
	25-42203- 14			1	
	25-42203- 15			1	
	25-42203- 16			1	
	25-42203- 17			1	
	25-42203- 18			1	
	25-42203- 19			1	
	25-42203- 20			1	
	25-42203- 21			1	
	25-42203- 22			1	
	25-42203- 23			1	
	25-42203- 24			1	
	25-42203- 25			1	
	25-42203- 26			1	
	25-42203- 27			1	
	25-42203- 28			1	
	25-42203- 29			1	
	25-42203- 30			1	
	25-42203- 31			1	
	25-42203- 32			1	
	25-42203- 33			1	
	25-42203- 34			1	
	25-42203- 35			1	
	25-42203- 36			1	
	25-42203- 37			1	
	25-42203- 38			1	
	25-42203- 39			1	
	25-42203- 40			1	
	25-42203- 41			1	
	25-42203- 42			1	
	25-42203- 43			1	
	25-42203- 44			1	
	25-42203- 45			1	
	25-42203- 46			1	
	25-42203- 47			1	
	25-42203- 48			1	
	25-42203- 49			1	
	25-42203- 50			1	
	25-42203- 51			1	
	25-42203- 52			1	
	25-42203- 53			1	
	25-42203- 54			1	
	25-42203- 55			1	
	25-42203- 56			1	
	25-42203- 57			1	
	25-42203- 58			1	
	25-42203- 59			1	
	25-42203- 60			1	
	25-42203- 61			1	
	25-42203- 62			1	
	25-42203- 63			2	
	25-42203- 65			2	
	25-42203- 67			1	
	25-42203- 68			1	
	25-42203- 69			1	
	25-42203- 70			1	
	25-42203- 71			1	
	25-42203- 72			1	
	25-42203- 73			1	
	25-42203- 74			1	
	25-42203- 75			1	
	25-42203- 76			1	
	25-42203- 77			1	
	25-42203- 78			1	
	25-42203- 79			1	
	25-42203- 80			1	
	25-42204- 1			1	
	25-42204- 2			1	
	25-42250- 1	A	15 - 10 32 -	1	G-153
	25-42250- 2	A	15 - 10 32 -	1	
	25-42250- 3	A	32 -	2	
	25-42250- 4	A	32 -	2	
	25-42250-301			2	
	25-42250-302			2	
	25-42250-303			1	
	25-42250-304			1	

STOCK	PART NUMBER	SOURCE CODE	FIGURE & INDEX NO.	QTY. PER A/C	MICROFILM INDEX
R82MDA-	25-42251- 1	P1	32 - 46	1	G-154
R82MDA-	25-42251- 2	P1	32 - 46	1	
	25-42251- 3	X1		2	
	25-42251- 4	X1		2	
	25-42251- 5	X1		4	
	25-42251- 7	X1		4	
	25-42251- 11	X1		4	
	25-42251- 13	X1		4	
	25-42251- 15	X1		4	
	25-42251- 17	X1		4	
	25-42251- 19	X1		4	
	25-42251- 21	X1		4	
	25-42251- 23			24	
	25-42251-301			2	
	25-42251-302			2	
R82MDA-	25-42252- 1	P1	32 - 37	8	B-601
	25-42252- 3	X1		8	
	25-42252- 3F	X1		8	
	25-42253- 3	M1	32 - 38	8	
	25-42254- 3	M1	32 - 41	4	B-602
	25-42254- 4	M1	32 - 42	4	
R82MDA-	25-42256- 3	P1	32 - 33	4	
	25-42257- 3	M1	32 - 30	8	
R82MDA-	25-42258- 3	P	32 - 28	8	
R82MDA-	25-42259- 1	P1	32 - 1	4	
	25-42259- 3	X1	32 - 9	4	
	25-42259- 5	X1	32 - 7	4	
R82MDA-	25-42260- 1	P1	32 - 15	4	
	25-42260- 7	X1	32 - 24	4	
	25-42260- 9	X1	32 - 22	4	
	25-42261- 3	M1	32 - 39	16	A-383
	25-42262- 3	M1	32 - 10	8	
	25-42263- 3	M1	32 - 40	16	
R82MDA-	25-42264- 1	P1	32 - 14	4	
	25-42264- 3	X1		4	
	25-42265- 3	M1	32 - 12	8	
	25-42266- 3	M1	32 - 36	4	
	25-42267- 3		28 - 88	8	
			32 - 19		
	25-42268- 3			1	
	25-42268- 4			1	
	25-42268- 5			1	
	25-42268- 6			1	
	25-42268- 7			1	
	25-42268- 8			1	
	25-42269- 3			2	
	25-42269- 5			2	
	25-42270- 3			4	
	25-42270- 5			8	
	25-42270- 7			4	
	25-42270- 9			8	
	25-42271- 3			2	
	25-42273- 3			2	
	25-42273- 4			2	
	25-42274- 3			2	
	25-42276- 1			1	
	25-42276- 2			1	
	25-42276- 3			1	
	25-42276- 4			1	
	25-42276- 5			2	
	25-42300- 1	A	178 - 81	1	G-155
			183 -		
	25-42300- 2	A	178 - 81	1	
			183 -		
R82MDA-	25-42307- 3	P1	108 - 99	2	C-609
			109 - 86		
	25-42307- 3F	X1		2	
	25-42309- 3	P		2	A-385
	25-42309- 5		183 - 5	2	
R82MDA-	25-42310- 1		183 - 21	1	G-157
R82MDA-	25-42310- 2		183 - 21	1	
	25-42310- 11			1	
	25-42310- 12			1	
	25-42310-3-4F	X1		2	
R82MDA-	25-42312- 1	P1	183 - 1	2	C-610
	25-42312- 5	X1		2	
R82MDA-	25-42313- 3	P	183 - 10	2	
R82MDA-	25-42350- 1	P1	178 - 3	1	XA-241 XA-242
			182 -		
R82MDA-	25-42350- 2	P1	178 - 3	1	
			182 -		
R82MDA-	25-42350- 3	P1	178 - 2	1	
			182 -		
R82MDA-	25-42350- 4	P1	178 - 2	1	
			182 -		
R82MDA-	25-42350- 5	P1	178 - 4	1	
			182 -		
R82MDA-	25-42350- 6	P1	178 - 4	1	
			182 -		
	25-42350- 7	M1		1	
	25-42350- 8	M1		1	
	25-42350- 11	X1		1	
	25-42350- 12	X1		1	
	25-42350- 13	M1		1	
	25-42350- 14	M1		1	
	25-42350- 15	M1		1	

STOCK	PART NUMBER	SOURCE CODE	FIGURE & INDEX NO.	QTY. PER A/C	MICROFILM INDEX
	25-42350- 16	M1		1	
	25-42350- 17	M1		1	
	25-42350- 18	M1		1	
	25-42350- 19	M1		1	
	25-42350- 20	M1		1	
	25-42350- 21	M1		1	
	25-42350- 22	M1		1	
	25-42350- 23	M1		1	
	25-42350- 24	M1		1	
	25-42350- 31	M1		2	
	25-42350- 35	M1		2	
	25-42350- 37	M1	182 - 36	2	
	25-42350- 39	M1	182 -	2	
	25-42350- 41	M1	182 - 37	24	
	25-42350- 43	M1	182 - 40	24	
	25-42350- 45	M1		2	
	25-42350- 47	M1		2	
	25-42350- 49	M1		2	
	25-42350- 51	M1		1	
	25-42350- 52	M1		1	
	25-42350- 53	M1		2	
	25-42350- 55	M1		2	
	25-42350- 56	M1		2	
	25-42350- 59	M1		2	
	25-42350- 61	M1		3	
	25-42350- 62			3	
	25-42350- 65	M1		2	
	25-42350- 67	M1		1	
	25-42350- 68	M1		1	
	25-42350- 71	M1		1	
	25-42350- 72	M1		1	
	25-42350- 73	M1		1	
	25-42350- 74	M1		1	
	25-42350- 75	M1		2	
	25-42350- 77	M1		2	
	25-42350- 79	M1		2	
	25-42350- 80	X1		2	
	25-42350- 81	X1		2	
	25-42350- 82	X1		1	
	25-42350- 83	X1		1	
	25-42350- 84	X1		1	
	25-42350- 85	M1		2	
	25-42350- 87	M1	182 -	8	
	25-42350- 91	M1	182 - 52	32	
	25-42350- 93			1	
	25-42350- 94			1	
	25-42350- 95	M1		2	
	25-42350- 97	M1		4	
	25-42350- 99	M1		1	
	25-42350-100	M1		1	
	25-42350-101	M1		1	
	25-42350-102	M1		1	
	25-42350-103	M1		1	
	25-42350-104	M1		1	
	25-42350-105	M1		1	
	25-42350-106	M1		1	
	25-42350-107	M1	182 - 41	1	
	25-42350-108	M1	182 - 41	1	
	25-42350-109	M1	182 - 53	1	
	25-42350-110		182 - 53	1	
	25-42350-111			1	
	25-42350-112			1	
	25-42350-113	M1		1	
	25-42350-114	M1		1	
	25-42350-115	M1		2	
	25-42350-119	M1		1	
	25-42350-120	M1		1	
	25-42350-121	M1		2	
	25-42350-123			2	
	25-42350-125			2	
	25-42350-127			1	
	25-42350-128			1	
	25-42350-129			1	
	25-42350-130			1	
	25-42350-131			1	
	25-42350-132			1	
	25-42350-133			1	
	25-42350-134			1	
	25-42350-137			3	
	25-42350-138			3	
	25-42350-139			6	
	25-42350-141		178 - 1	1	
			182 -		
	25-42350-142		178 - 1	1	
			182 -		
	25-42350-143			1	
	25-42350-144			1	
	25-42350-145			1	
	25-42350-146			1	
	25-42350-147			1	
	25-42350-148			1	
	25-42350-149			1	
	25-42350-150			1	
	25-42350-151			1	
	25-42350-152			1	
	25-42350-153			1	

STOCK	PART NUMBER	SOURCE CODE	FIGURE & INDEX NO.	QTY. PER A/C	MICROFILM INDEX
	25-42350-154			1	
	25-42350-155		182 - 45	1	
	25-42350-156		182 - 45	1	
	25-42350-157			1	
	25-42350-158			1	
	25-42350-159			1	
	25-42350-160			1	
	25-42350-161			1	
	25-42350-162			1	
	25-42350-163		182 - 31	1	
	25-42350-164		182 - 31	1	
	25-42350-165			32	
	25-42350-167			32	
	25-42350-169			32	
	25-42350-171			32	
	25-42350-173			2	
	25-42350-175			128	
	25-42350-177			2	
	25-42350-179			2	
	25-42350-181			1	
	25-42350-182			1	
	25-42350-183			1	
	25-42350-184			1	
	25-42350-185			1	
	25-42350-186			1	
	25-42350-187			1	
	25-42350-188			1	
	25-42350-189			1	
	25-42350-190			1	
	25-42350-191			1	
	25-42350-192			1	
	25-42350-193			1	
	25-42350-194			1	
	25-42350-195			1	
	25-42350-196			1	
	25-42350-197			1	
	25-42350-198			1	
	25-42350-199			1	
	25-42350-200			1	
	25-42350-201			1	
	25-42350-202			1	
	25-42350-203			1	
	25-42350-204			1	
	25-42350-209			2	
	25-42350-211			2	
	25-42350-213			1	
	25-42350-214			1	
	25-42350-301			1	
	25-42350-302			1	
	25-42350-303			1	
	25-42350-304			1	
	25-42350-305			1	
	25-42350-306			1	
	25-42350-307			1	
	25-42350-308			1	
	25-42351- 1	M1		1	
	25-42351- 2	M1		1	
	25-42351- 3	M1		1	
	25-42351- 4	M1		1	
	25-42352- 1	M1		1	
	25-42352- 2	M1		1	
	25-42352- 3	M1		1	
	25-42352- 4	M1		1	
	25-42353- 1	M1		1	
	25-42353- 2	M1		1	
	25-42353- 3	M1		1	
	25-42353- 4	M1		1	
R82MDA-	25-42355- 1		182 - 33	1	
R82MDA-	25-42355- 2		182 - 33	1	
	25-42355- 5			1	
	25-42355- 6	M1		1	
	25-42355- 7	M1		1	
	25-42355- 8	M1		1	
R82MDA-	25-42356- 1		182 - 38	1	
R82MDA-	25-42356- 2		182 - 38	1	
	25-42356- 5	M1		1	
	25-42356- 6	M1		1	
	25-42356- 7	M1		1	
	25-42356- 8	M1		1	
R82MDA-	25-42357- 1		182 - 49	2	
	25-42357- 7			1	
R82MDA-	25-42358- 1		182 - 50	2	
	25-42358- 5			4	
	25-42358- 7			4	
	25-42359- 3		182 -	1	
	25-42359- 4		182 -	1	
	25-42360- 3		182 - 35	1	
	25-42360- 4		182 - 35	1	
	25-42361- 3		182 -	3	
	25-42362- 7		182 - 43	2	
	25-42362- 9		182 - 44	2	
	25-42362- 11			2	
	25-42362- 13			2	
	25-42363- 3		182 - 42	2	
	25-42363- 5			2	
	25-42364- 3		183 - 32	2	
	25-42364- 4		183 - 32	2	
	25-42365- 5		182 - 46	3	
	25-42365- 6		182 - 46	2	
	25-42365- 7			1	
	25-42365- 8			1	
	25-42366- 3			16	
	25-42367- 3			16	
	25-42368- 3			1	
	25-42368- 4			1	
	25-42369- 3			1	
	25-42369- 4			1	
	25-42370- 3			2	
	25-42371- 3			2	
	25-42372- 1			1	
	25-42372- 2			1	
	25-42372- 3			1	
	25-42372- 4			1	
	25-42373- 1			1	
	25-42373- 2			1	
	25-42373- 3			1	
	25-42373- 4			1	
	25-42374- 1			2	
	25-42374- 3			1	
	25-42375- 1			1	
	25-42375- 2			1	
	25-42375- 3			1	
	25-42375- 4			1	
	25-42400- 5	M1		1	G-160
	25-42400- 6	M1		1	
	25-42400- 7	M1		1	
	25-42400- 8	M1		1	
	25-42400- 9	M1		2	
	25-42400- 15	M		2	
	25-42400- 17	M1		1	
	25-42400- 18	M1		1	
	25-42400- 19	M	183 - 48	1	
	25-42400- 21		183 - 49	1	
	25-42400- 22		183 - 49	1	
	25-42400- 23		183 - 47	6	
	25-42400-301		183 - 41	1	
	25-42400-302		183 - 41	1	
	25-42401- 3	M1		2	A-387
	25-42401- 5	M1		2	
	25-42402- 5		183 - 45	4	
	25-42450- 3		183 - 44	2	G-161
	25-42450-301		178 - 80 183 -	1	
	25-42450-302		178 - 80 183 -	1	
	25-42451- 1	M1	183 - 50	2	B-615
	25-42451- 3	X1		2	
	25-42452- 1	M1		2	XA-105
	25-42452- 5	M1		2	
	25-42452- 7	M1		6	
	25-42452- 9			2	
	25-42452-301		183 - 52	2	
	25-42454- 3	M1	183 - 38	4	
	25-42455- 3	M1		2	A-390
	25-43000- 1	*	178 - 78 181 -	1	G-162
	25-43000- 2	*	178 - 78 181 -	1	
R82MDA-	25-43051- 3	P	181 - 3	2	
	25-43052- 1		181 - 34	1	
	25-43052- 2		181 - 34	1	
	25-43052- 5			1	
	25-43052- 6			1	
	25-43052- 7			1	
	25-43052- 8			1	
	25-43053- 1		181 - 35	1	
	25-43053- 2		181 - 35	1	
	25-43053- 3			1	
	25-43053- 4			1	
	25-43053- 5			2	
	25-43054- 3	M1	181 - 18	4	
	25-43055- 1		181 - 22	2	
	25-43055- 3		181 - 29	2	
	25-43056- 1		181 - 10	2	
	25-43056- 3		181 - 17	6	
	25-43057- 3		181 - 26	2	
	25-43058- 3		181 - 30	1	
	25-43058- 5		181 - 30	1	
	25-43058- 7		181 - 6	1	
	25-43058- 9		181 - 6	1	
	25-43058-1003			1	
	25-43058-1005			1	
	25-43058-1007			1	
	25-43058-1009			1	
	25-45000- 1	*	184 -	1	G-163
	25-45000- 3			2	
	25-45000-301	*	184 -	1	
R82MDA-	25-45001- 1		189 - 1	1	XA-243
	25-45001- 3		189 - 7	1	
	25-45001- 3F	X1		1	
	25-45003- 3F	X1		1	B-616
	25-45004- 1		184 - 41	1	

STOCK	PART NUMBER	SOURCE CODE	FIGURE & INDEX NO.	QTY. PER A/C	MICROFILM INDEX
	25-45005- 3F	X1		1	B-617
	25-45006- 3F	X1		1	G-165
	25-45007- 3			1	G-166 G-167
	25-45007- 3F	X1		1	
	25-45008- 1		189 - 17	1	
	25-45008- 3	X1		1	XA-244
	25-45009- 1		189 - 25	1	
	25-45009- 3	X1		1	G-169
R82MDA-	25-45010- 1		189 - 8	1	C-612
	25-45010- 5		189 - 14	2	
	25-45010- 7		189 - 15	1	
R82MDA-	25-45011- 1		185 - 97	1	XA-63
	25-45011- 5	M1		1	
	25-45012- 5			2	
R82MDA-	25-45013- 5		184 - 48	2	
R82MDA-	25-45014- 1		189 - 16	1	
	25-45014- 5		189 - 32	1	
	25-45014- 7		189 - 33	1	
R82MDA-	25-45015- 3		184 - 7	1	
R82MDA-	25-45016- 3		184 - 30	1	
R82MDA-	25-45017- 3		184 - 19	2	
R82MDA-	25-45018- 3		184 - 20	5	
	25-45020- 1	A	184 - 28	1	
			189 -		
R82MDA-	25-45024- 1		184 - 10	2	
	25-45024- 3	M1		2	
	25-45024- 5	M1		2	
	25-45024- 7		184 -	1	
	25-45024- 9		184 - 15	1	
	25-45026- 1		184 - 32	1	C-613
	25-45026- 3	M1		1	
	25-45026- 5	M1		1	
R82MDA-	25-45029- 1		184 - 9	1	C-614
	25-45029- 3	X1		1	
	25-45029- 5	X1		1	
	25-45029- 7		184 -	1	
	25-45029- 9		184 - 14	1	
	25-45031- 3		184 - 16	2	
	25-45032- 3		184 - 18	2	
R82MDA-	25-45033- 3		185 - 20	2	C-615
	25-45033- 3F	X1		2	
R82MDA-	25-45034- 3		185 - 21	2	
	25-45036- 3		189 - 3	1	
R82MDA-	25-45037- 5		184 - 31	2	
	25-45038- 3		184 - 25	2	
	25-45039- 3		184 - 24	2	
R82MDA-	25-45040- 1		184 - 22	2	
	25-45040- 3	X1		2	C-616
	25-45040- 5	X1		2	
	25-45041- 3		189 - 10	1	
	25-45041- 4		189 - 11	1	
	25-45042- 1	M1		3	C-617
	25-45042- 5	M1		1	
	25-45045- 1	A	184 -	1	C-618
	25-45048- 3		184 - 27	2	
R82MDA-	25-45049- 3		184 - 27	1	
	25-45049- 3F	X1		1	
	25-45051- 5		184 - 21	1	
R82MDA-	25-45200- 1	P1	184 - 45	1	G-171
			185 -		
	25-45201- 3	X2	185 -108	1	XB-20
	25-45202- 3F	X1		1	G-172
	25-45203- 3F	X1		1	G-173
	25-45204- 3	X2		1	D-380
	25-45204- 5	X2	185 - 94	1	
	25-45207- 3F	X1		1	C-619
R82MDA-	25-45208- 3	P1	185 - 91	12	A-405
	25-45209- 1	P1	185 -	2	C-620
	25-45209- 5		185 - 60	1	
R82MDA-	25-45210- 3	P1	185 - 89	1	D-381
	25-45211- 5		185 - 83	2	C-621
	25-45211- 7			1	
	25-45212- 3F	X1		1	
	25-45213- 3F	X1		1	
R82MDA-	25-45214- 1	P1	185 - 66	1	G-174
	25-45214- 3	X1		1	
	25-45214- 3F	X1		1	
	25-45216- 3F	X1		1	
	25-45217- 3F	X1		1	G-175
	25-45218- 3F	X1		2	G-176
	25-45218- 5	P1		1	
	25-45218- 7	P1	185 - 96	1	
	25-45219- 1	X2	185 - 6	1	XA-245
	25-45219- 3	X1		1	
R82MDA-	25-45220- 3	P1	185 - 9	1	C-624
R82MDA-	25-45221- 3	P1	185 - 52	1	B-623
	25-45222- 1	X2	185 - 99	1	
	25-45222- 3	X1		1	
R82MDA-	25-45223- 1	P1	185 - 44	1	
	25-45223- 3	X1		1	
	25-45225- 3F	X1		1	
R82MDA-	25-45226- 1	P1	185 - 41	1	
	25-45226- 3			1	
R82MDA-	25-45227- 1	P1	185 - 10	1	
	25-45227- 3	X1		1	
R82MDA-	25-45228- 1	P1	185 - 15	1	

STOCK	PART NUMBER	SOURCE CODE	FIGURE & INDEX NO.	QTY. PER A/C	MICROFILM INDEX
	25-45228- 3	X1		1	
R82MDA-	25-45229- 1	P1	185 - 24	1	XA-107
	25-45229- 3	X1		1	
R82MDA-	25-45230- 3	P1	185 - 38	1	
R82MDA-	25-45231- 3	P1	185 - 31	1	
	25-45232- 3	M1	185 - 33	2	
			185 - 37		
R82MDA-	25-45235- 3		185 - 54	1	
	25-45238- 5		185 - 77	1	A-408
R82MDA-	25-45239- 3		185 - 80	1	
R82MDA-	25-45241- 3		185 - 87	1	
R82MDA-	25-45242- 3		185 - 86	1	
	25-45243- 3		185 - 72	1	
R82MDA-	25-45244- 1		185 - 75	1	B-631
	25-45244- 3	X1		1	
R82MDA-	25-45245- 3		185 - 3	2	
R82MDA-	25-45246- 1		185 - 5	1	A-411
	25-45246- 3	X1		1	
	25-45247- 5	X1		1	B-632
R82MDA-	25-45249- 1		185 - 92	1	C-628
	25-45250- 3		185 - 74	1	
	25-45250- 5		185 - 53	1	
	25-45255- 3		185 - 22	1	A-412
	25-45257- 3	M1	185 - 57	2	A-112
			185 - 62		
	25-45258- 3	X1		1	C-629
	25-45259- 3		185 -	1	
	25-45260- 1		184 - 37	1	
	25-45260- 3		184 - 40	1	
	25-45260- 5	X1		1	
R82MDA-	25-45261- 3	P1	185 - 34	1	
R82MDA-	25-45262- 3	P1	185 - 35	1	
	25-45263- 3	M1	185 - 93	4	
	25-45265- 3	M1	185 -106	1	A-55
	25-45266- 3	P1	185 - 58	2	
R82MDA-	25-45267- 1	P1	185 - 61	1	
			185 -		
	25-45267- 3		185 - 65	1	
R82MDA-	25-45268- 3		185 - 63	1	
	25-45269- 3		185 - 56	1	
	25-45269-3			1	
	25-45270- 3			1	
	25-45500- 1	*	138 - 9	1	
			144 -		
R82MDA-	25-45501- 1		144 - 26	1	
	25-45501- 3		144 - 34	1	
R82MDA-	25-45502- 1		144 - 29	1	
	25-45502- 5			1	
	25-45508- 3F	X1		1	G-182
	25-45509- 3		144 - 33	1	
	25-45510- 3	M1	144 - 3	2	
			144 - 28		
R82MDA-	25-45512- 3	P1	144 - 4	1	
	25-46100- 1	P1	184 - 1	1	G-185 G-186
			188 -		
	25-46100- 2	P1	184 - 1	2	
			188 -		
	25-46100- 3	X1		1	
	25-46100- 4			1	
	25-46100- 5			1	
	25-46100- 6			1	
	25-46100- 7			1	
	25-46100- 8			1	
	25-46100- 9		188 - 15	1	
	25-46100- 10		188 -	1	
	25-46100- 11			1	
	25-46100- 12			1	
	25-46100- 13			1	
	25-46100- 14			1	
	25-46100- 15			1	
	25-46100- 16			1	
	25-46100- 17			1	
	25-46100- 18			1	
	25-46100- 19			1	
	25-46100- 20			1	
	25-46100- 21			1	
	25-46100 22			1	
	25-46100- 23			1	
	25-46100- 24			1	
	25-46100- 25			1	
	25-46100- 26			1	
	25-46100- 27			1	
	25-46100- 28			1	
	25-46100- 29			1	
	25-46100- 30			1	
	25-46100- 31			1	
	25-46100 32			1	
	25-46100- 33			1	
	25-46100- 34			1	
	25-46100- 35			1	
	25-46100- 36			1	
	25-46100- 37			1	
	25-46100- 38			1	
	25-46100- 39			3	
	25-46100- 40			3	
	25-46100- 41			1	

STOCK	PART NUMBER	SOURCE CODE	FIGURE & INDEX NO.	QTY. PER A/C	MICROFILM INDEX
	25-46100- 42			1	
	25-46100- 49		188 - 12	1	
	25-46100- 51			2	
	25-46100- 53		188 - 13	1	
	25-46100- 57			1	
	25-46100- 63			1	
	25-46100- 65			1	
	25-46100- 66			1	
	25-46100- 67			1	
	25-46100- 69			1	
	25-46100- 71		188 - 16	1	
	25-46100- 73			1	
R82MDA-	25-46100-301	P1	184 - 1	2	
			188 -		
	25-46101- 3F	X1		1	C-636
	25-46101- 4F	X1		1	
	25-46102- 3F	X1		1	C-637
	25-46102- 4F	X1		1	
	25-46103- 1	M1	188 -	2	C-638
	25-46103- 7	M1	188 - 6	2	
	25-46103- 9	M1	188 - 8	2	
	25-46103- 11	M1	188 - 11	2	
	25-46103- 13	M1	188 - 7	2	
	25-46105- 1	P1	188 - 3	1	C-639
	25-46105- 2	P1	188 - 3	1	
	25-46105- 3	X1		1	
	25-46105- 4	X1		1	
	25-46106- 1	P1	188 - 1	1	B-638
	25-46106- 2	P1	188 - 1	1	
	25-46106- 3	X1		1	
	25-46106- 4	X1		1	
R82MDA-	25-46107- 3	P1	188 - 17	1	XA-108
	25-46107- 3C	X1		1	
R82MDA-	25-46107- 4	P1	188 - 17	1	
	25-46107- 4C	X1		1	
	25-46151- 3	M1	95 - 94	2	
	25-49001- 1	*	138 -	1	XA-248
	25-49004- 1	M1	138 -	1	XA-25
	25-49004- 3	M1	138 - 33	1	
	25-49052- 1	M1	138 -	1	
	25-49053- 3	*	138 - 31		XA-6
	25-49054- 3	M1	138 - 42	1	XA-7
	25-49055- 3		138 - 44	1	
	25-50001- 1	*	138 - 13	1	G-187
			164 -		
	25-50001- 3	*	124 -	1	
	25-50001-301	*	138 - 13	1	
			164 -		
	25-50001-303	*	124 -	1	
R82MDA-	25-50002- 1	P1	124 - 2	1	C-641
	25-50003- 1	P1	164 -	1	G-188
	25-50003- 2	P1	164 -	1	
	25-50003- 5	M1	164 - 4	2	
	25-50003- 7	X1	164 - 20	1	
	25-50003- 8	X1	164 - 20	1	
	25-50004- 3	A	194 - 12	2	B-639
	25-50004-301		194 - 12	1	
	25-50005- 1	P1	194 - 2	2	B-640
R82MDA-	25-50005-301	P1	194 - 2	4	
	25-50006- 1	*	190 -	1	XB-24 THRU XB-29
R82MDA-	25-50006- 3	P		1	
	25-50006- 5		191 - 29	2	
	25-50007- 1	A	194 - 17	2	
	25-50007-301	A	194 - 17	1	
	25-50008			1	
R82MDA-	25-50009- 1	P1	124 - 2	2	
R82MDA-	25-50010- 1	P1	164 -	1	
R82MDA-	25-50010- 2	P1	164 -	1	
	25-50010- 3	M1	164 - 4	2	
	25-50010- 5	P1	164 - 20	1	
	25-50010- 6	P1	164 - 20	1	
	25-50050- 5			1	
	25-50051- 3	X1	194 - 5	3	
R82MDA-	25-50052- 3	P1	194 - 28	3	
R82MDA-	25-50055- 3	P1	194 - 34	2	
R82MDA-	25-50056- 3	P1	194 - 35	2	
	25-50058- 3			1	XA-110
	25-50058- 3F	X1		1	
	25-50058- 5	X1	124 - 23	1	
	25-50058- 5F			1	
	25-50059- 3	X1	124 - 11	3	
	25-50059- 3F	X1		1	C-644
R82MDA-	25-50060- 3	P1	124 - 16	1	A-419
	25-50061- 3	M1	124 - 1	2	A-420
	25-50062- 1	X1	164 - 24	1	XA-111
	25-50062- 2	X1	164 - 24	1	
	25-50062- 3	X1		1	
	25-50062- 3F	X1		1	
	25-50062- 4	X1		1	
	25-50062- 4F	X1		1	
	25-50062- 5F	X1		1	
	25-50062- 6F	X1		1	
	25-50064- 3	X1	164 - 22	2	
	25-50064- 3F	X1		2	XA-65
	25-50064- 5F	X1		2	
	25-50066- 3	M1	194 - 9	2	
	25-50067- 3	M1	194 - 7	2	
R82MDA-	25-50071- 3	P1	194 - 14	3	A-423
R82MDA-	25-50072- 3	P1	194 - 15	6	A-424
	25-50076- 3	M1	164 - 14	2	XA-66
	25-50076- 5	M1	164 - 14	2	
	25-50077- 3	M1	164 - 15	2	XA-67
	25-50077- 5	M1	164 - 15	2	
	25-50078- 5			1	
	25-50078- 9			2	
	25-50078- 11			1	
	25-50079- 5	M1	194 - 19	3	
	25-50080- 1	M1	164 - 27	1	B-649
	25-50080- 2	M1	164 - 27	1	
	25-50080- 3	M1		1	
	25-50080- 4	M1		1	
	25-50080- 5	M1		1	
	25-50080- 6	M1		1	
R82MDA-	25-50081- 3	P1	194 - 37	6	A-426
	25-50082- 3	M1	164 - 19	2	A-427
	25-50082- 5	P1	164 - 19	2	
	25-50083- 3	M1	164 - 3	4	A-428
	25-50084- 3	M1	164 - 10	2	
	25-50085- 3	M1	164 - 11	2	A-430
R82MDA-	25-50086- 3	P	194 - 38	6	A-431
			194 - 39		
	25-50087- 3F	X1		2	G-191
	25-50088- 3	P1	194 - 16	2	G-192
	25-50089- 3F	X1		3	A-432
R82MDA-	25-50090- 3	P1	194 - 10	3	
	25-50091- 3F	X1		1	C-648
	25-50092- 3	P1	194 - 33	2	
	25-50093- 5		190 - 20	4	B-650
	25-50094- 3	M1	190 - 23	2	B-651
	25-50095- 1	M1	192 - 5	80	A-434
			192 - 6		
			192 - 7		
	25-50095- 3	X1		80	
	25-50096- 1		192 - 8	24	
	25-50096- 3	X1		24	A-435
	25-50097- 3	M1	192 - 12	2	B-652
	25-50098- 3	M1	191 - 23	15	A-436
			191 - 37		
			191 - 47		
			193 - 18		
R82MDA-	25-50099- 3	P	191 - 58	2	
	25-50101- 3	M1	194 - 23	3	A-439
R82MDA-	25-50102- 3	P	194 - 27	3	A-440
	25-50103- 1	M1	193 - 16	4	A-441
			193 - 17		
	25-50103- 3	M1		4	
	25-50105- 3F	X1		1	
	25-50106- 3	P1	194 - 16	1	
	25-50107- 3F	X1		1	
	25-50108- 3	P1	194 - 33	1	
	25-50109- 3F	X1		2	
	25-50110- 3	P1		1	
	25-50110- 5	P1		1	
	25-50111- 3	P1	164 - 22	2	XA-68
	25-50112- 1	P1	164 - 24	1	XA-112
	25-50112- 2	X1	164 - 24	1	
	25-50112- 3	X1		1	
	25-50112- 4	X1		1	
R82MDA-	25-50113- 3	P	124 - 17	2	XA-69
	25-50114- 3	X1	124 - 24	2	XA-113
	25-50115- 3	M1	124 - 19	2	XA-8
	25-50116- 3	M1	164 - 10	2	XA-26
	25-50117- 3	M1	164 - 11	2	XA-27
	25-50118- 3	M1	194 - 9	6	XA-28
	25-50119- 3	M1	194 - 7	6	XA-29
	25-50120- 3		192 - 13	18	
	25-50121- 3		192 - 13	18	
	25-50122- 1		191 - 79	1	
	25-50122- 3			1	
	25-50126- 3			3	
	25-50127- 3			1	
	25-50128- 3			1	
	25-52000- 1	M	106 - 22	1	G-193
			126 -		
	25-52001- 1		106 - 22	1	
			126 -		
R82MDA-	25-52058- 3	P	126 - 10	5	A-442
R82MDA-	25-52059- 3	P	126 - 3	2	A-443
R82MDA-	25-52060- 1	P1	191 - 16	3	
	25-52060- 3	X1		3	
	25-52060- 5	X1		3	
	25-52061- 5	M1	126 - 18	2	XA-70
	25-52062- 1	A	126 -	1	XA-114
	25-52063- 1		126 - 11	1	
	25-52063- 3			1	
	25-52063- 5			1	
	25-52100			1	
	25-52110- 3			1	
	25-52110- 3C			1	
	25-52110- 4			1	
	25-52110- 4C			1	

STOCK	PART NUMBER	SOURCE CODE	FIGURE & INDEX NO.	QTY. PER A/C	MICROFILM INDEX
	25-54004- 5	A	75 -	1	G-195
	25-54004- 7			1	
	25-54004-301	*	74 - 24	1	
			75 -		
	25-54004-303			1	
R82MDA-	25-54051- 3	P	75 - 28	1	B-654
	25-54054- 3F	X1		1	C-650
R82MDA-	25-54055- 3	P1	75 - 26	1	D-1
	25-54057- 7	~~P1~~	~~75 - 2~~	1	D-2
	25-54057- 9	X2	75 - 2	1	
	25-54057-3-5C			1	
	25-54060- 5	X1		1	XA-250
	25-54060- 7	X1		1	
	25-54060-1-3F	X1		1	
	25-54060-301	P1	75 - 34	1	
	25-54060-303		75 - 34	1	
	25-54061- 5	M1	75 - 36	1	B-657
	25-54062- 5	M1	75 - 15	1	B-658
	25-54063- 5	M1	75 - 18	1	XA-30
R82MDA-	25-54064- 3	P	75 - 30	12	A-447
	25-54065- 5	M1	75 - 31	6	A-448
	25-54066- 7	M1	75 - 32	1	B-659
	25-54066- 9	M1	75 - 19	1	
R82MDA-	25-54067- 3	P1	75 - 14	1	B-660
	25-54067- 3C	X1		1	
	25-54068- 1		75 -	1	
	25-54068- 3		75 -	1	
R82MDA-	25-54069- 3	P	75 - 8	1	A-449
	25-54070- 5			1	D-4
	25-54070-301		75 - 4	1	
	25-54071- 3	M1	46 -104	1	B-661
	25-54072- 3	M1	75 - 10	1	A-450
	25-54073- 3	M1		1	A-451
	25-54074- 3	M1	75 - 25	1	A-452
	25-54075- 3		75 - 6	1	
	25-54076- 1			1	
	25-54077- 3			1	
	25-54077- 3C			1	
	25-54078- 3			1	
	25-54078- 3C			1	
	25-54079- 3			1	
	25-54080- 3			1	
	25-54081- 3			1	
	25-54081- 3C			1	
	25-54100- 1	*	44 - 15	1	G-197
			61 -		
R82MDA-	25-54102- 1	P1	61 - 35	1	D-5
	25-54102- 3	X1		1	
	25-54102- 3F	X1		1	
R82MDA-	25-54103- 1	P1	61 - 13	1	D-6
	25-54103- 3	X1		1	
	25-54103- 3F	X1		1	
R82MDA-	25-54104- 1	P1	117 - 9	1	D-7
	25-54104- 3	X1		1	
	25-54104- 3F	X1		1	
R82MDA-	25-54105- 1	P1	117 - 17	1	D-8
	25-54105- 3	X1		1	
	25-54105- 3F	X1		1	
R82MDA-	25-54106- 3	P1	61 - 39	1	D-9
	25-54106- 3F	X1		1	
	25-54107- 1	M1	61 - 37	1	D-10
	25-54107- 3	M1		1	
	25-54107- 5	M1		1	
	25-54107- 7	M1		1	
R82MDA-	25-54108- 3	M1	108 - 70	1	D-11
	25-54108- 3F	X1		1	
	25-54110- 1	*	106 - 20	1	G-198
			117 -		
	25-54110-301	*	106 - 20	1	
			117 -		
	25-54110-303	*	106 - 20	1	
			117 -		
	25-54111- 1	X2		1	
	25-54111-1-3			1	
	25-54111-1-3F			1	
	25-54112- 1	X2		1	
	25-54112-1-3			1	
	25-54112-1-3F			1	
	25-54113- 1	M1		1	
	25-54113- 3	M1		1	
	25-54113- 5	M1		1	
	25-54113- 7	M1		1	
	25-54113- 9	M1		1	
	25-54113- 11	M1		1	
	25-54113- 13	M1		1	
	25-54113- 15	M1		1	
	25-54114- 1	M1	117 - 27	1	
	25-54114- 3	M1		1	
	25-54114- 5	M1		1	
	25-54114- 7	M1		1	
	25-55000- 1	*	73 -	1	G-199
	25-55054- 3	M1	94 - 47	1	A-454
R82MDA-	25-55057- 1	P1	46 -103	1	D-14
	25-55057-1-3	X1		1	
	25-55057-1-3C	X1		1	
	25-55058- 1	M1	73 -	1	B-663

STOCK	PART NUMBER	SOURCE CODE	FIGURE & INDEX NO.	QTY. PER A/C	MICROFILM INDEX
	25-55058- 3	M1	73 - 32	1	
	25-55059- 3	M1		1	B-664
	25-55059- 5	M1	73 - 28	2	
	25-55059- 5C	X1		1	
	25-55060- 5	M1	73 - 31	1	A-456
	25-56000- 1	*	106 - 21	1	G-200
			125 -		
	25-56000- 3		125 - 2	1	
	25-56000-301	*	106 - 21	1	
			125 -		
	25-56000-303		106 - 21	1	
			125 -		
R82MDA-	25-56005- 1	P1	125 - 35	1	G-201
	25-56005- 3	X1		1	
	25-56005- 5	X1		1	
	25-56005- 7	X1		1	
	25-56005- 9	X1		1	
	25-56005- 11	X1		1	
	25-56005- 13	X1		1	
	25-56005- 15	X1		1	
	25-56005- 17	M1		1	
	25-56005- 21	M1		1	
	25-56005- 23	X1		1	
	25-56005- 25	X1		1	
	25-56005- 27	M1		1	
	25-56005- 29	M1		1	
	25-56005- 31	X1		1	
R82MDA-	25-56051- 3	P1	191 - 35	2	G-202
	25-56051- 3C	X1		2	
	25-56052- 1			1	XA-251
	25-56052- 5	X2	125 - 27	1	
	25-56052- 5C	X1		1	
	25-56052-1-9			1	
	25-56052-1-9C			1	
	25-56053- 1	M1	125 -	1	
	25-56053- 3	M1		1	
	25-56054- 3	M1	125 - 8	1	B-665
	25-56055- 1	M1	125 -	1	
	25-56055- 3	M1	125 - 15	1	
	25-56055- 5	M1	125 - 16	1	
	25-56055- 7	M1	125 - 13	1	
	25-56056- 3	M1	125 - 6	1	
R82MDA-	25-56057- 3	P1	125 - 39	1	B-666
R82MDA-	25-56058- 3	P1	125 - 41	1	B-667
	25-56059- 3	M	125 - 4	1	
	25-56060- 3	M1	125 - 17	1	
	25-56060- 7		125 - 18	1	
	25-56060- 9			1	
	25-56060-1003	M1		1	
	25-56060-1007			1	
	25-56060-1009			1	
	25-56061- 1	M1	125 - 34	1	
	25-56061- 3	M1		1	
	25-56061- 5	M1		1	
	25-56061- 7	M1		1	
	25-56062- 3	M	125 - 31	1	
	25-56063- 3	M	125 - 12	1	
	25-56064- 3	M	125 - 28	1	
	25-56065- 3			1	
	25-56065- 4			1	
	25-56071- 3	M1	191 - 33	2	
R82MDA-	25-56073- 3	P	191 - 36	2	
	25-56076- 1		125 -	1	
	25-56076- 3		125 - 22	1	
	25-56076- 5		125 - 19	1	
	25-58000-301		106 - 19	1	
			118 -		
	25-58000-303		106 - 19	1	
			118 -		
	25-58000-305			1	
	25-58000-309		106 - 19	1	
			118 -		
R82MDA-	25-58001- 1	P1	119 - 83	1	
	25-58001-301	P1		1	
R82MDA-	25-58002- 1	P1	120 -142	1	
R82MDA-	25-58003- 1	P1	121 - 65	1	
	25-58004- 1	P1	36 - 62	1	
	25-58004- 2	P1	36 - 62	1	
	25-58004- 3	P1	36 - 62	1	
	25-58004- 4	P1	36 - 62	1	
	25-58004- 5			1	
	25-58004- 6			1	
R82MDA-	25-58005- 1	P1	36 - 64	1	
R82MDA-	25-58005- 2	P1	36 - 64	1	
	25-58005- 3	P1	36 - 64	1	
	25-58005- 4	P1	36 - 64	1	
	25-58005- 5			1	
	25-58005- 6			1	
	25-58006-301	*	118 - 4	1	G-210 G-211
			119 -		
	25-58006-303	*	118 - 4	1	
			119 -		
	25-58007-301	*	118 - 3	1	XA-255 XA-256
			120 -		
	25-58007-303		118 - 3	1	
			120 -		

STOCK	PART NUMBER	SOURCE CODE	FIGURE & INDEX NO.	QTY. PER A/C	MICROFILM INDEX
	25-58008-301	*	118 - 2	1	XA-257
			121 -		
	25-58009- 1	*	14 - 3	1	XA-258 XA-259
			36 -		
	25-58009- 2	*	14 - 3	1	
			36 -		
	25-58009- 3	*	15 - 3	1	
			35 -		
	25-58009- 4	*	15 - 3	1	
			35 -		
	25-58009-301	*	14 - 3	1	
			36 -		
	25-58009-302	*	14 - 3	1	
			36 -		
	25-58009-303		15 - 3	1	
			35 -		
	25-58009-304		15 - 3	1	
			35 -		
	25-58009-305			1	
	25-58009-306			1	
	25-58009-307			1	
	25-58009-308			1	
	25-58010-301	*	118 - 1	1	G-217
			122 -		
	25-58011- 1	*	118 -	1	G-218
	25-58011- 3	M1	138 - 14	1	
			163 -		
	25-58012- 1	*	138 - 6	1	G-219
			161 -		
	25-58014-301		106 - 44	1	G-220
			123 -		
	25-58014-303		106 - 44	1	
			123 -		
	25-58015- 1	M1	35 -	1	XA-260
	25-58015- 2	M1	35 -	1	
	25-58015- 3	M1		2	
	25-58015- 5	M1		2	
	25-58015- 9	M1		2	
	25-58015- 11	M1		2	
	25-58015- 13	M1		2	
	25-58015- 15	M1		2	
	25-58015- 17	M1		2	
	25-58015- 19	M1		2	
	25-58015- 21	M1		2	
	25-58015- 23	M1		8	
	25-58015- 25	M1		2	
	25-58015- 27	M1	36 -	1	
	25-58015- 28	M1	36 -	1	
	25-58017- 1		118 - 1	1	
			122 -		
	25-58017- 3		118 - 1	1	
			122 -		
	25-58020- 1			1	
R82MDA-	25-58050- 3	P1	121 - 24	1	D-15
	25-58050- 3C	X1		1	
	25-58051- 1	M1	120 -	1	G-222
	25-58051- 3	M1	120 -144	1	
	25-58051- 5	M1	120 -153	1	
	25-58051- 7	M1	120 -148	2	
	25-58051- 9	M1	120 -147	2	
	25-58051- 11	M1	120 -145	1	
	25-58051- 13	M1	120 -149	1	
	25-58051- 15	M1	120 -152	1	
	25-58051- 17	M1	120 -151	1	
	25-58051- 19	M1	120 -150	1	
	25-58051- 21	M1	120 -146	1	
	25-58051- 27			4	
	25-58051- 31	M1	114 -	1	
	25-58051- 39	M1	114 - 44	1	
	25-58051- 41	M1	114 - 43	1	
	25-58051- 43	M1	114 - 45	1	
	25-58051- 45			2	
	25-58051- 47			2	
	25-58051- 49			1	
	25-58051- 51			1	
	25-58051-301			1	
R82MDA-	25-58052- 3	P1	120 -113	1	G-223
	25-58052- 3C	X1		1	
R82MDA-	25-58053- 1	P1	120 -	1	D-16
			122 - 69		
	25-58053- 3		120 - 73	1	
	25-58053- 3C			1	
R82MDA-	25-58055- 3		120 - 81	1	G-224
	25-58055- 3C	X1		1	
R82MDA-	25-58056- 3		121 - 26	1	XA-115
	25-58056- 3C	X1		1	
	25-58057- 1		120 - 68	1	
	25-58058- 1		119 -	1	G-225
	25-58058- 3		119 - 89	2	
	25-58058- 5		119 - 94	1	
	25-58058- 7		119 - 90	2	
	25-58058- 9		119 - 93	1	
	25-58058- 13	M1	119 - 88	1	
	25-58058- 15		119 - 91	2	
	25-58058- 17		119 - 86	1	
	25-58058- 19		114 - 31	1	
	25-58058- 21		119 - 92	1	
	25-58058- 23		114 - 32	1	
	25-58058- 25		119 - 87	1	
	25-58058- 27	M1		2	
	25-58058- 29	M1		1	
	25-58058- 30	M1		1	
	25-58058- 31	M1		2	
	25-58058- 33		114 -	1	
	25-58058-301	M1		1	
R82MDA-	25-58059- 3	P1	120 - 16	4	D-18
			121 - 45		
	25-58059- 3C	X1		4	
R82MDA-	25-58060- 3	P1	121 - 27	1	
	25-58060- 3C	X1		1	
	25-58061- 1	*	120 -124	1	
	25-58062- 3	P1	120 -116	1	G-226
	25-58062- 3C	X1		1	
	25-58063- 3	P1	119 - 36	1	D-384
	25-58063- 3C	X1		1	
	25-58063- 5		119 - 36	1	
	25-58063- 5C			1	
R82MDA-	25-58064- 3	P1	191 - 58	2	G-227
	25-58064- 3C	X1		2	
R82MDA-	25-58065- 1	P1	120 -122	1	D-20
	25-58065- 3C	X1		1	
	25-58065- 7	X1		1	
	25-58066- 1	M1	121 -	1	XA-261
	25-58066- 3	M1	121 - 68	1	
	25-58066- 5	M1	121 - 77	1	
	25-58066- 7	M1	121 - 72	1	
	25-58066- 8	P1	121 - 72	1	
	25-58066- 9	M1	121 - 73	1	
	25-58066- 10	M1	121 - 73	1	
	25-58066- 11	M1	121 - 69	1	
	25-58066- 13	M1	121 - 70	1	
	25-58066- 15	M1	121 - 71	1	
	25-58066- 17	M1	121 - 75	1	
	25-58066- 19	M1	121 - 74	1	
	25-58066- 21	M1	121 - 76	2	
	25-58066- 23			1	
	25-58066- 27			1	
	25-58066- 29	M1	106 - 43	1	
	25-58066- 31			1	
	25-58066- 32			1	
	25-58066- 33			1	
	25-58066- 35			1	
	25-58066- 37			1	
	25-58066- 38			1	
	25-58066-301			1	
R82MDA-	25-58067- 3	P1	121 - 58	2	D-21
	25-58067- 3C	X1		2	
	25-58069- 3	M1	36 - 5	2	A-463
	25-58072- 1	M1	18 -	10	A-464
	25-58072- 3	M1		10	
	25-58072- 5	M1		10	
R82MDA-	25-58076- 3	P	120 - 8	3	D-22
			120 - 60		
			121 - 8		
R82MDA-	25-58076- 5	P	120 - 98	1	
R82MDA-	25-58076- 7	P	18 - 28	10	
			107 - 30		
			119 - 82		
			121 - 41		
R82MDA-	25-58076- 9	P	120 - 78	1	
R82MDA-	25-58076- 11	P	120 - 80	1	
R82MDA-	25-58076- 13	P	119 - 13	3	
R82MDA-	25-58076- 15	P	108 -	8	
			108 -		
			109 -		
			119 - 60		
			119 - 78		
			120 - 13		
			121 - 44		
R82MDA-	25-58076- 17	P	121 - 57	4	
R82MDA-	25-58076- 21	P	36 - 32	4	
			121 - 20		
R82MDA-	25-58076- 23	P	119 - 44	7	
			120 - 34		
			120 - 49		
			122 - 10		
			122 - 16		
			122 - 30		
			122 - 48		
R82MDA-	25-58076- 25	P	119 - 39	1	
R82MDA-	25-58076- 27	P	119 - 37	2	
			120 -115		
R82MDA-	25-58076- 29	P	119 - 35	4	
			122 - 9		
			122 - 26		
			122 - 49		
R82MDA-	25-58076- 31	P		3	
R82MDA-	25-58076- 33	P	122 - 57	4	
R82MDA-	25-58076- 35	P		3	
R82MDA-	25-58076- 37	P	120 - 18	4	
			121 - 47		
R82MDA-	25-58076- 39	P		2	

STOCK	PART NUMBER	SOURCE CODE	FIGURE & INDEX NO.	QTY. PER A/C	MICROFILM INDEX
R82MDA-	25-58076- 41	P	120 - 83	11	
			120 - 90		
			120 -123		
	25-58076- 43	P	120 -110	1	
R82MDA-	25-58076- 45	P	120 -138	1	
R82MDA-	25-58076- 47	P	36 - 7	2	
R82MDA-	25-58076- 49	P	36 - 61	2	
R82MDA-	25-58076- 51	P	36 - 43	2	
R82MDA-	25-58076- 53	P	119 - 19	27	
			120 - 5		
			120 - 25		
			121 - 5		
			121 - 64		
R82MDA-	25-58076- 55			2	
R82MDA-	25-58076- 57			2	
	25-58076- 59		120 - 74	10	
			120 -112		
			122 - 65		
			122 - 68		
			163 - 12		
R82MDA-	25-58080- 3	P1	119 - 34	1	D-23
	25-58080- 3C	X1		1	
	25-58081- 1	*	163 - 13	1	
	25-58082- 1	*	122 - 71	1	
	25-58083- 1	*		2	
	25-58084- 3	*	119 - 58	1	
	25-58084- 5	*	120 - 11	1	
	25-58084- 7	*	121 - 42	1	
	25-58084- 9	*	36 - 20	2	
	25-58084- 11	*	36 - 21	2	
	25-58084- 13	*	36 - 57	2	
	25-58084- 15	*	81 - 62	1	
	25-58084- 17	*	36 - 42	2	
	25-58084- 19	*	136 - 52	1	
	25-58084- 21	*	136 - 54	1	
	25-58084- 25		136 - 53	1	
	25-58084- 27		136 - 55	1	
	25-58085- 1	*	36 - 3	3	
			122 - 27		
	25-58085- 3		36 - 3	7	
			122 - 27		
	25-58086- 3			2	
	25-58086- 3C			2	
	25-58087- 3	*	35 - 24	2	
	25-58088- 1	*	119 -	1	
	25-58088- 3	*	120 -	1	
	25-58088- 5	*	119 - 57	1	
	25-58088- 7	*	120 - 59	1	
	25-58088- 9	*	36 - 38	4	
			120 - 51		
			121 - 21		
	25-58088- 11	*	120 - 6	1	
			121 - 6		
	25-58088- 13	*	36 - 58	3	
			119 - 22		
	25-58088- 17	*	119 - 56	2	
			120 - 57		
	25-58088- 19	*	119 - 52	2	
			120 - 54		
	25-58088- 21	*	119 - 53	2	
			120 - 55		
	25-58088- 23	*	119 - 48	1	
	25-58088- 25	*	36 - 37	6	
			119 - 50		
			120 - 53		
			121 - 23		
	25-58088- 27	*	119 - 51	1	
	25-58088- 29	*		1	
	25-58088-301	*		1	
R82MDA-	25-58089- 3	P1	122 - 11	2	G-231
	25-58089- 3C	X1		2	
	25-58090- 3		36 - 29	4	
	25-58090- 5		36 -	4	
	25-58090- 7			4	
	25-58090- 9			4	
	25-58091- 3	M1	120 - 61	3	B-671
			121 - 33		
	25-58091- 5	M1	119 - 61	1	
R82MDA-	25-58093- 3	P	119 - 4	9	A-465
			119 - 80		
			120 - 63		
			120 - 96		
			120 -135		
			121 - 34		
			121 - 39		
R82MDA-	25-58094- 1	P1	119 - 14	1	G-232
	25-58094-301		119 - 14	1	
	25-58095- 1		36 - 50	2	
	25-58095- 3			2	
	25-58096- 3			2	
	25-58097- 1	M1	120 - 93	1	G-233
	25-58097- 3	M1		1	
	25-58098- 1	M1	120 -130	1	G-234
	25-58098- 3	M1	120 -139	1	
	25-58100- 3	M1	36 - 12	2	
	25-58101- 5	M	120 -109	1	
	25-58101-301	A	120 -101	1	
	25-58102- 3			1	
	25-58103- 5	M	120 - 89	1	
	25-58103-301	A	120 - 84	1	
	25-58104- 5	M	120 - 47	1	
	25-58104-301	A	120 -	1	
	25-58105- 3	M1	120 - 75	1	B-675
R82MDA-	25-58107- 3	P	120 -100	2	B-676
			120 -133		
	25-58108- 3		36 - 19	6	
R82MDA-	25-58109- 1	P1	119 - 1	2	
	25-58109- 3	X1		2	
	25-58109- 3C	X1		2	
	25-58111- 1	M1	121 - 36	1	
	25-58111- 3	M1		1	
	25-58112- 1	M1	119 - 75	1	G-237
	25-58112- 3	M1		1	
	25-58113- 1	M1	121 - 52	1	B-677
	25-58113- 3	M1	119 - 11	1	
	25-58113- 5			1	
	25-58113- 7			1	
	25-58113- 11			2	
	25-58113- 13			2	
	25-58114- 1	M1	141 - 28	1	
	25-58114- 3	M1		1	
	25-58114- 5	M1		1	
	25-58115- 3	X1		2	
	25-58115- 3C	X1		2	
R82MDA-	25-58116- 3	P1		1	
	25-58116- 3C	X1		1	
	25-58117- 3			1	
	25-58117- 3C			1	
	25-58117- 4			1	
	25-58117- 4C			1	
R82MDA-	25-58118- 1	P1	35 - 62	2	D-26
	25-58118- 3	X1		4	
	25-58118- 3C	X1		4	
R82MDA-	25-58119- 1	P1	35 - 68	2	D-27
	25-58119- 3	X1		4	
	25-58119- 3C	X1		4	
	25-58120- 5	M	119 - 27	1	A-467
	25-58120- 11	M	119 - 31	1	
	25-58120- 13	M	121 - 17	1	
	25-58120- 15		119 - 29	1	
	25-58120- 17		119 - 28	1	
	25-58120-1005	M		1	
	25-58120-1011	M		1	
	25-58120-1013	M		1	
	25-58120-1015			1	
	25-58120-1017			1	
	25-58121- 1	M1		1	XA-72
	25-58121- 3	M1		1	
	25-58122- 3	M1	121 - 49	1	A-468
	25-58123- 1	M1		1	
R82MDA-	25-58124- 1	P1	121 - 60	2	D-28
R82MDA-	25-58124- 2	P1	121 - 61	2	
	25-58124- 3	X1		2	
	25-58124- 3C	X1		2	
	25-58124- 4	X1		2	
	25-58124- 4C	X1		2	
R82MDA-	25-58125- 1	P1	121 - 1	2	XA-116
R82MDA-	25-58125- 2	P1	121 - 2	2	
	25-58125- 3	X1		2	
	25-58125- 3C	X1		2	
	25-58125- 4	X1		2	
	25-58125- 4C	X1		2	
R82MDA-	25-58126- 1	P1	120 - 23	2	D-30
R82MDA-	25-58126- 2	P1	120 - 24	2	
	25-58126- 3	X1		2	
	25-58126- 3C	X1		2	
	25-58126- 4	X1		2	
	25-58126- 4C	X1		2	
R82MDA-	25-58127- 1	P1	119 - 18	4	D-31
			120 - 1		
R82MDA-	25-58127- 2	P1	120 - 2	2	
	25-58127- 3	X1		4	
	25-58127- 3C	X1		4	
	25-58127- 4	X1		2	
	25-58127- 4C	X1		2	
	25-58128- 3C	X1		4	D-32
R82MDA-	25-58128- 5	P1	120 - 3	4	
			121 - 3		
	25-58129- 3	X1	122 - 53	8	D-33
	25-58129- 3C	X1		8	
	25-58131- 3	X1	122 - 46	2	D-34
	25-58131- 3C	X1		2	
	25-58132- 9	M	122 - 6	2	B-678
	25-58132- 11	M	122 - 23	2	
	25-58132-301	A	122 -	2	
	25-58132-303	A	122 -	2	
	25-58133- 3	M		1	
	25-58133- 5	M	122 - 35	2	
	25-58133-301	A	122 -	2	
	25-58134- 1			1	
	25-58134- 3			1	
	25-58134- 5	M	122 - 63	3	

STOCK	PART NUMBER	SOURCE CODE	FIGURE & INDEX NO.	QTY. PER A/C	MICROFILM INDEX
	25-58134-301	A	122 -	3	
R82MDA-	25-58135- 3	P1	36 - 34	2	
	25-58135- 3C	X1		2	G-238
	25-58137- 3			1	
	25-58137- 4			1	
	25-58138- 5	M	122 - 47	2	
	25-58138-301	A	122 -	2	
	25-58139- 5	M	122 - 56	4	B-680
	25-58139-301	A	122 -	4	
	25-58142- 13	X1		2	G-240
	25-58142- 17		163 - 1	2	
	25-58142- 19		163 - 2	2	
	25-58142- 21			1	
	25-58142- 23			1	
	25-58142- 25			1	
	25-58142- 27			1	
	25-58142- 29			1	
	25-58142- 31			1	
	25-58143- 3	P1	36 - 1	1	XA-117
	25-58143- 3C	X1		1	
	25-58143- 4	P1	36 - 1	1	
	25-58143- 4C	X1		1	
R82MDA-	25-58144- 1	P1	36 - 8	2	
	25-58144- 3	X1		2	D-38
	25-58144- 3C	X1		2	
	25-58144- 11	M1		2	
	25-58144- 13	M1		2	
	25-58145- 3	M1	119 - 6	1	A-470
	25-58146- 3	M1	119 - 9	2	A-471
			121 - 56		
	25-58147- 3	M1	119 - 7	2	A-472
			121 - 50		
	25-58148- 5	M	119 - 64	1	
	25-58148-301	A	119 -	1	
	25-58149- 9	M	119 - 42	1	
	25-58149- 11	M	120 - 32	1	
	25-58149-301	A	119 -	1	
	25-58149-303	A	120 -	1	
R82MDA-	25-58151- 1	P1	35 - 65	1	D-40
R82MDA-	25-58151- 2	P1	35 - 65	1	
	25-58151- 3			1	
	25-58151- 3C	X1		1	
	25-58151- 4			1	
	25-58151- 4C			1	
R82MDA-	25-58152- 1	P1	35 - 71	2	
	25-58152- 3			2	
	25-58152- 3C			2	
R82MDA-	25-58153- 3	P	18 - 26	12	
	25-58154- 1	M1	107 - 5	1	D-42
	25-58154- 3	M1		1	
	25-58154- 7			1	
	25-58155- 3	X1	163 - 17	1	D-43
	25-58155- 3C	X1		1	
	25-58156- 3C	X1		1	D-44
	25-58156- 5		163 - 21	1	
	25-58157- 3		163 - 16	1	
	25-58158- 1	A	120 -	1	D-45
	25-58158- 3	X1		1	
R82MDA-	25-58158- 11	P1	120 - 41	1	
	25-58158- 13			2	
	25-58159- 5	X1		1	B-685
R82MDA-	25-58160- 5	P1	161 - 15	1	G-241
	25-58160- 5C	X1		1	
R82MDA-	25-58161- 1	P1	36 - 60	1	G-242
R82MDA-	25-58161- 2	P1	36 - 60	1	
	25-58161- 3	X1		1	
	25-58161- 3C	X1		1	
	25-58161- 4	X1		1	
	25-58161- 4C	X1		1	
	25-58161- 7	X1		2	
	25-58163- 3	M	163 - 4	1	B-686
			163 - 11		
	25-58165- 1	M1	163 - 15	1	B-688
	25-58165- 3	M1		1	
	25-58165- 5	M1		1	
	25-58167- 3	M1		1	G-244
	25-58167- 4	M1		1	
	25-58167- 7	M1		1	
	25-58167- 8	M1		1	
	25-58167-301	M1	118 - 27	1	
	25-58167-302	M1	118 - 28	1	
	25-58168- 1	M1	118 - 31	1	B-689
	25-58168- 3	M1		1	
	25-58168- 5	M1		2	
	25-58169- 1	M1	118 - 9	1	D-46
	25-58169- 2	M1	118 - 10	1	
	25-58169- 3	M1		2	
	25-58169- 5	M1		1	
	25-58169- 6	M1		1	
	25-58169- 7	M1		2	
	25-58170- 1	M1	118 - 41	1	D-47
	25-58170- 3	M1		1	
	25-58170- 5	M1		1	
	25-58170- 7	M1		1	
	25-58171- 1	M1	118 - 36	1	D-48
	25-58171- 3	M1		1	
	25-58171- 5	M1		1	
	25-58171- 7	M1		1	
	25-58172- 5	M1	118 - 40	1	B-690
	25-58172- 7	M1	118 - 30	1	
	25-58172- 9	M1	118 - 29	1	
	25-58172- 11	M1	118 - 25	1	
	25-58172- 13	M1	118 - 24	1	
	25-58172- 15	M1	118 - 23	1	
	25-58172- 17	M1	118 - 26	1	
	25-58172- 19	M1	118 - 12	1	
	25-58172- 21	M1	118 - 11	1	
	25-58172- 23	M1	118 - 14	1	
	25-58172- 25	M1	118 - 13	1	
	25-58172- 27	M1	118 - 16	1	
	25-58172- 29	M1	118 - 15	1	
	25-58172- 31	M1	118 - 18	1	
	25-58172- 33	M1	118 - 17	1	
	25-58172- 35	M1	118 - 5	1	
	25-58172- 37	M1	118 - 6	1	
	25-58172- 39	M1	163 - 25	1	
	25-58172- 41	M1	163 - 24	1	
	25-58172- 43	M1	118 - 45	1	
	25-58172-1043	M1		1	
	25-58173- 3	M1		4	A-473
	25-58174- 3	M	122 - 73	1	
	25-58174- 5	M	122 - 51	1	A-474
	25-58175- 3	M1	122 - 38	2	B-691
	25-58175- 5	M1	122 - 40	2	
	25-58176- 1	M1		1	
	25-58177- 1	X2	163 - 5	1	
	25-58177- 2	X2	163 - 6	1	
	25-58177- 3	X1		1	G-245
	25-58177- 3C			1	
	25-58177- 4			1	
	25-58177- 4C			1	
	25-58178- 1	M1		1	A-475
	25-58178- 3			1	
	25-58178- 5			1	
	25-58178- 7			1	
R82MDA-	25-58179- 3	P1	36 - 15	3	D-49
			120 -196		
	25-58179- 3C	X1		3	
	25-58180- 3	M	161 - 3	1	A-476
	25-58180- 5	M	161 - 2	1	
	25-58180- 7	M	161 - 7	1	
	25-58180- 9	M	161 - 5	2	
			162 - 5		
	25-58180- 11	M	162 - 9	1	
	25-58180- 13	M	162 - 11	1	
	25-58180- 15	M	162 - 1	1	
	25-58180-1003	M		1	
	25-58180-1005	M		1	
	25-58180-1007	M		1	
	25-58180-1009	M		2	
	25-58180-1011	M		1	
	25-58180-1013	M		1	
	25-58180-1015	M		1	
R82MDA-	25-58181- 3	P1	15 - 25	174	A-477
			18 -		
			18 - 70		
			18 -		
			18 -		
			18 -100		
			18 -		
			20 - 76		
			107 - 25		
	25-58181- 3C	X1		174	
	25-58182- 1	M1	17 - 9	1	G-246
	25-58182- 2	M1	17 - 9	1	
	25-58182- 3	M1	35 - 35	1	
	25-58182- 4	M1	35 - 35	1	
	25-58182- 5	X1		1	
	25-58182- 6	X1		1	
	25-58182- 7	X1		1	
	25-58182- 8	X1		1	
	25-58182- 9	X1		1	
	25-58182- 10	X1		1	
	25-58182- 11	X1		1	
	25-58182- 12	X1		1	
	25-58182- 15	M	17 -	2	
	25-58182- 17	X1		1	
	25-58182- 18	X1		1	
	25-58182- 19	X1		1	
	25-58182- 20	X1		1	
	25-58182- 21			2	
	25-58184- 1	P1	35 - 1	1	G-248
	25-58184- 2	P1	35 - 1	1	
	25-58184- 3			2	
	25-58184- 5			2	
	25-58184- 6			2	
	25-58184- 7			1	
	25-58184- 8			1	
	25-58184- 9			1	
	25-58184- 10			1	
R82MDA-	25-58186- 3	P1	141 - 27	1	
	25-58186- 3C	X1		1	D-50

STOCK	PART NUMBER	SOURCE CODE	FIGURE & INDEX NO.	QTY. PER A/C	MICROFILM INDEX
	25-58187- 3	M	119 - 74	2	A-478
	25-58188- 1	M1	119 - 71	12	A-479
			120 - 91		
	25-58188- 3	M1		12	
R82MDA-	25-58189- 3	P1	119 - 73	2	B-692
	25-58189- 3C	X1		2	
	25-58191- 3	M	141 - 27	1	A-57
	25-58192- 3	M1	107 - 4	2	
	25-58193- 3	M1		2	A-480
	25-58193- 5	M1		2	
	25-58194- 3	M		2	
	25-58194- 5	M		2	
	25-58194- 11	M		2	
	25-58195- 3	M1	36 - 28	2	
	25-58195- 4	M1	36 - 29	2	
	25-58196- 5	M1	35 - 2	2	B-695
	25-58197- 3	M1		4	
	25-58198- 3	M1	119 - 69	1	
	25-58199- 3	M1	36 - 23	2	D-55
	25-58199- 5	M1	36 - 40	1	
	25-58199- 7	M1	36 - 40	1	
	25-58199- 9	M	35 - 48	1	
	25-58199- 11	M	35 - 48	1	
	25-58199- 13	M	35 - 46	1	
	25-58199- 15	M	35 - 46	1	
	25-58199- 17	M	35 - 40	1	
	25-58199- 19	M	35 - 40	1	
	25-58199- 21	M	35 - 21	2	
	25-58199- 23	M	35 - 15	1	
	25-58199- 25	M	35 - 15	1	
	25-58199- 27	M	35 - 13	1	
	25-58199- 29	M	35 - 13	1	
	25-58199- 31	M	35 - 10	1	
	25-58199- 33	M	35 - 10	1	
	25-58199- 35	M	35 - 54	1	
	25-58199- 37	M	35 - 60	1	
	25-58199- 39	M	35 - 50	1	
	25-58199- 41	M	35 - 56	1	
	25-58199- 43	M	35 - 47	1	
	25-58199- 45	M	35 - 47	1	
	25-58199- 47	M	35 - 45	1	
	25-58199- 49	M	35 - 45	1	
	25-58199- 51	M	35 - 37	1	
	25-58199- 53	M	35 - 37	1	
	25-58199- 55	M	35 - 58	1	
	25-58199- 57	M	36 - 59	1	
	25-58199- 59	M	36 - 59	1	
	25-58199- 61			1	
	25-58199- 63			1	
	25-58199- 65			1	
	25-58199- 67			1	
	25-58199- 69		36 -	4	
	25-58199- 71			1	
	25-58199- 73			1	
	25-58199-1003	M1		2	
	25-58199-1005	M1		1	
	25-58199-1007	M1		1	
	25-58199-1009	M		1	
	25-58199-1011	M		1	
	25-58199-1013	M		1	
	25-58199-1015	M		1	
	25-58199-1017	M		1	
	25-58199-1019	M		1	
	25-58199-1021	M		2	
	25-58199-1023	M		1	
	25-58199-1025	M		1	
	25-58199-1027	M		1	
	25-58199-1029	M		1	
	25-58199-1035	M		1	
	25-58199-1037	M		1	
	25-58199-1039	M		1	
	25-58199-1041	M		1	
	25-58199-1043	M		1	
	25-58199-1045	M		1	
	25-58199-1047	M		1	
	25-58199-1049	M		1	
	25-58199-1051	M		1	
	25-58199-1053	M		1	
	25-58199-1055	M		1	
	25-58199-1057	M		1	
	25-58199-1059	M		1	
	25-58199-1061			1	
	25-58199-1063			1	
	25-58199-1065			1	
	25-58199-1067			1	
	25-58199-1069			4	
	25-58199-1071			1	
	25-58199-1073			1	
	25-58200- 5	M	35 - 32	2	A-484
	25-58200-301	A	35 -	2	
	25-58200-303			2	
	25-58201- 1	P1		4	
	25-58201- 3	M1		4	
	25-58201- 5	M1		4	
	25-58202- 3	M1	119 - 67	3	A-485
			121 - 35		

STOCK	PART NUMBER	SOURCE CODE	FIGURE & INDEX NO.	QTY. PER A/C	MICROFILM INDEX
	25-58203- 3	M1	120 -140	1	B-698
	25-58203- 5	M1	120 -141	2	
R82MDA-	25-58205- 3	P1	17 - 8	6	A-487
	25-58206- 3	M1	35 - 36	2	A-488
	25-58207- 1	M1	108 -	7	B-699
			109 -		
			112 -		
			114 -		
			114 -		
	25-58207- 3	M1		7	
	25-58208- 1	M1		1	
	25-58208- 3	M1		2	
	25-58208- 5			2	
	25-58208-301			2	
	25-58210- 1	M1		1	
	25-58210- 3	M1		1	
	25-58210- 7	M1		1	
	25-58210- 9	M1		1	
	25-58211- 7	M	123 - 9	1	C-2
	25-58211- 9	M	123 - 6	1	
	25-58211- 11	M	123 - 17	1	
	25-58211- 13	M	123 - 15	1	
	25-58211- 15	M	123 - 12	1	
	25-58211- 19	M	123 - 19	1	
	25-58211- 21	M	191 - 82	3	
	25-58211- 23	M1	123 - 10	1	
	25-58211- 25	M	123 - 20	1	
	25-58211- 27	M1	191 - 25	3	
	25-58211- 31		191 - 89	2	
	25-58211- 33		191 - 86	2	
	25-58211- 35		191 - 88	2	
	25-58211- 37		191 - 94	2	
	25-58211- 39		123 - 26	1	
	25-58211- 41		123 - 28	1	
	25-58211- 43		123 - 22	1	
	25-58211-1007	M		1	
	25-58211-1009	M		1	
	25-58211-1011	M		1	
	25-58211-1013	M		1	
	25-58211-1015	M		1	
	25-58211-1021	M		3	
	25-58211-1023	M1		1	
	25-58211-1025	M		1	
	25-58211-1027	M1		3	
	25-58211-1031			2	
	25-58211-1033			2	
	25-58211-1035			2	
	25-58211-1037			2	
	25-58211-1039			1	
	25-58211-1041			1	
	25-58211-1043			1	
	25-58212- 1	M1	118 - 35	1	G-250
	25-58212- 3	M1		1	
	25-58212- 5	M1		1	
	25-58213- 3	M1	118 - 39	1	A-489
	25-58213- 5	M1	118 - 34	1	
	25-58213- 7	M1	118 - 21	1	
	25-58213- 9	M1	118 - 22	1	
	25-58213-1003	M1		1	
	25-58213-1005	M1		1	
	25-58214- 1	M1		1	C-3
	25-58214- 3	M1		1	
	25-58215- 1	M1	163 - 26	1	G-291
	25-58215- 2	M1	163 - 27	1	
	25-58215- 3	M1		2	
	25-58215- 7	M1		1	
	25-58215- 8	M1		1	
	25-58216- 3	M1	119 - 33	1	A-490
R82MDA-	25-58217- 3	P1		1	
	25-58217- 3C	X1		1	
	25-58218- 1	M1	36 - 18	4	
	25-58218- 3		120 - 22	1	
	25-58218- 5	M1	36 - 30	2	
	25-58218- 7	M1	121 - 29	1	
	25-58218- 9	M1		2	
	25-58218- 11			1	
	25-58218- 13	M1		2	
	25-58218- 15	M1		1	
	25-58218- 17			2	
	25-58218-301			2	
	25-58219- 3	P1		1	
	25-58219- 3C	X1		1	
	25-58220- 1	P1		1	
	25-58220-1-3			1	
	25-58220-1-3C			1	
	25-58221- 1	A		1	
	25-58222- 1	*		1	
	25-58223- 3			2	
	25-58223- 3C			2	
R82MDA-	25-58224- 3	P1		2	
	25-58224- 3C	X1		2	
R82MDA-	25-58226- 1	P1		2	
	25-58226- 3	X1		2	
	25-58228- 1			1	
	25-58230			1	
	25-58231			2	

STOCK	PART NUMBER	SOURCE CODE	FIGURE & INDEX NO.	QTY. PER A/C	MICROFILM INDEX
	25-58233- 1	M1		2	
	25-58233- 3	M1		2	
	25-58236- 3	X2	162 - 14	1	
	25-58236- 3C	X1		1	
	25-58237- 1	M1		1	
	25-58238- 1	*	138 - 6 162 -	1	
	25-58239- 3	M1		1	
	25-58240- 3	M1		1	
	25-58241- 3	M		1	
	25-58242- 3	M1		1	
	25-58243- 3	P		1	
	25-58248- 3			1	
	25-58248- 3C			1	
	25-58249- 3			1	
	25-58249- 5			1	
	25-58249- 7			1	
	25-58249- 9			1	
	25-58249- 11			1	
	25-58249- 13			1	
	25-58249- 15			1	
	25-58249- 17			1	
	25-58249- 19			1	
	25-58249- 21			1	
	25-58249- 23			1	
	25-58249- 25			1	
	25-58249- 27			1	
	25-58249- 29			1	
	25-58249- 31			1	
	25-58249- 33			1	
	25-58249- 35			1	
	25-58249- 37			1	
	25-58249- 39			1	
	25-58249- 41			1	
	25-58249- 43			1	
	25-58249- 45			1	
	25-58249- 47			1	
	25-58249- 49			1	
	25-58249- 51			1	
	25-58249- 53			1	
	25-58249- 55			1	
	25-58249- 57			1	
	25-58249- 59			1	
	25-58249- 61			1	
	25-58249-1003			1	
	25-58249-1005			1	
	25-58249-1007			1	
	25-58249-1009			1	
	25-58249-1011			1	
	25-58249-1013			1	
	25-58249-1015			1	
	25-58249-1017			1	
	25-58249-1019			1	
	25-58249-1021			1	
	25-58249-1023			1	
	25-58249-1025			1	
	25-58249-1027			1	
	25-58249-1029			1	
	25-58249-1031			1	
	25-58249-1033			1	
	25-58249-1035			1	
	25-58249-1037			1	
	25-58249-1039			1	
	25-58249-1041			1	
	25-58249-1043			1	
	25-58249-1045			1	
	25-58249-1047			1	
	25-58249-1049			1	
	25-58249-1051			1	
	25-58249-1053			1	
	25-58249-1055			1	
	25-58249-1057			1	
	25-58249-1059			1	
	25-58249-1061			1	
	25-58250- 1			1	
	25-58250- 2			1	
	25-58251- 1	M1	35 - 7	1	
	25-58251- 2	M1	35 - 7	1	
	25-58251- 3			1	
	25-58251- 4			1	
	25-58251- 5			2	
	25-58253- 1			1	
	25-58254- 3		120 -117	1	
	25-58254- 3C			1	
	25-58255- 1			1	
	25-58255- 2			1	
	25-58255-1-3			1	
	25-58255-1-3C			1	
	25-58255-2-4			1	
	25-58255-2-4C			1	
	25-58256- 3			1	
	25-58257- 3			1	
	25-58260- 1			1	
	25-58260- 3			1	
	25-58260- 5			2	
	25-58260- 7			2	
	25-58260- 9			1	
	25-58260- 11			1	
	25-58260- 13			1	
	25-58260- 15			2	
	25-58262- 3			2	
	25-58263- 3			2	
	25-58276- 1			1	
	25-58276- 2			1	
	25-58276- 3			1	
	25-58276- 4			1	
	25-58276- 5			1	
	25-58276- 6			1	
	25-58276- 7			1	
	25-58276- 8			1	
	25-58276- 9			1	
	25-58276- 10			1	
	25-58276- 11			1	
	25-58276- 12			1	
	25-58276- 13			2	
	25-58276- 15			1	
	25-58276- 16			1	
	25-58276- 17			1	
	25-58276- 18			1	
	25-58277- 1		141 - 57	1	
	25-58277- 5			1	
	25-58277- 7			1	
	25-58279- 1		108 - 61	1	
	25-58279- 3			1	
	25-58279- 5			1	
	25-58279- 7			1	
	25-58279- 9			1	
	25-58279- 11			1	
	25-58280- 1		107 - 34	1	
	25-58280- 3			1	
	25-58280- 5			1	
	25-58280- 7			1	
	25-58281- 1			1	
	25-58281- 2			1	
	25-58281- 3			1	
	25-58281- 4			1	
	25-58281- 5			2	
	25-58283- 1			1	
	25-58283- 2			1	
	25-58283- 3			1	
	25-58283- 4			1	
	25-58283- 5			2	
	25-58283- 6			2	
	25-58283- 7			1	
	25-58283- 8			1	
	25-58283- 11			1	
	25-58283- 12			1	
	25-58283- 13			2	
	25-58283- 14			2	
	25-58284- 3		36 -	2	
	25-58284- 3C			2	
	25-58288- 3			1	
	25-58288- 5			1	
	25-58288- 7			1	
	25-58288- 9			1	
	25-58288- 11			1	
	25-58288- 13			1	
	25-58288-1003			1	
	25-58288-1005			1	
	25-58288-1007			1	
	25-58288-1009			1	
	25-58288-1011			1	
	25-58288-1013			1	
	25-59000- 9	X1		1	G-252 G-253 G-254
	25-59000- 10	X1		1	
	25-59000- 11	X1		4	
	25-59000- 37	M	127 - 9	2	
	25-59000- 39	M	127 - 4	2	
	25-59000- 43	M1	127 - 1	2	
	25-59000- 45	X1		4	
	25-59000- 47	X1		1	
	25-59000- 48	X1		1	
	25-59000- 49	X1		1	
	25-59000- 50	X1		1	
	25-59000- 51	X1		1	
	25-59000- 52	X1		1	
	25-59000- 55	M1		2	
	25-59000- 57	M1		2	
	25-59000- 59	M1		2	
	25-59000- 61	M1		2	
	25-59000- 63	M	127 - 8	2	
	25-59000- 65			1	
	25-59000- 66			1	
	25-59000- 67			1	
	25-59000- 68			1	
	25-59000- 69			1	
	25-59000- 70			1	
	25-59000- 71			1	
	25-59000- 72			1	
	25-59000- 73			1	
	25-59000- 74			1	

STOCK	PART NUMBER	SOURCE CODE	FIGURE & INDEX NO.	QTY. PER A/C	MICROFILM INDEX
	25-59000- 75			1	
	25-59000- 76			1	
	25-59000- 77			1	
	25-59000- 78			1	
	25-59000- 79			1	
	25-59000- 80			1	
	25-59000- 81			1	
	25-59000- 82			1	
	25-59000- 83			1	
	25-59000- 84			1	
	25-59000- 85			1	
	25-59000- 86			1	
	25-59000- 87			1	
	25-59000- 88			1	
	25-59000- 89			1	
	25-59000- 90			1	
	25-59000-301		127 -	1	
	25-59000-302		127 -	1	
	25-59000-303		127 - 5	1	
	25-59000-304		127 - 5	1	
	25-59001- 1	P1	190 - 24	6	G-255
	25-59001- 3	M1		12	
	25-59001- 5	M1		6	
	25-59001- 7	M1		6	
	25-59051- 3	M1		4	A-491
	25-59052- 3	M1		12	A-492
	25-59053- 3	X2		4	
	25-59053- 3C	X1		4	
	25-60000- 15	P1		1	G-256 THRU G-259
	25-60000- 23	M1		1	
	25-60000- 25	M1		1	
	25-60000- 27	M1		1	
	25-60000- 29	M		1	
R82MDA-	25-60000- 33	P1	81 - 67	1	
	25-60000- 35	M1		1	
R82MDA-	25-60000- 39	P1	81 - 69	2	
R82MDA-	25-60000- 41	P1	81 - 70	1	
	25-60000- 45		81 -	1	
	25-60000- 47		81 -	1	
	25-60000- 49		81 -	1	
	25-60000- 51		81 - 72	1	
	25-60000- 53		81 - 71	1	
	25-60000- 55		81 - 68	1	
	25-60000- 57		81 - 39	1	
	25-60000- 59			1	
	25-60000- 61		81 -	4	
	25-60000- 63			1	
	25-60000-303		73 - 49	1	
			81 -		
	25-60000-305		73 - 49	1	
			81 -		
	25-60002- 1			1	
	25-60003- 1	A1	73 - 50	1	G-260 G-261
			82 -		
	25-60003- 3			1	
	25-60003- 5			1	
	25-60003- 7	M1		1	
	25-60003- 9			1	
	25-60003- 11	M1	82 -	1	
	25-60003- 13	M1		2	
	25-60003- 15	M1	82 - 36	1	
	25-60003- 19	M1	82 -	1	
	25-60003- 21	M1		1	
	25-60003- 25	M1		1	
	25-60003- 27	M1		2	
	25-60003- 29	M1	82 - 35	2	
	25-60003- 31	M1	82 - 34	2	
	25-60004- 1			1	
	25-60005- 1	M1	81 - 7	1	G-262
	25-60005- 3	M1		1	
	25-60005- 5	M1		1	
	25-60006- 1	*	73 - 37	1	G-263
			93 -		
	25-60006-301	*	73 - 37	1	
			93 -		
	25-60008- 1		44 - 17	1	G-264
		*	68 -		
	25-60008-301		44 - 17	11	
			68 -		
	25-60009- 3	*	42 - 11	2	
			95 - 46		
	25-60009- 5	*	95 - 22	1	
	25-60009- 7	M	81 - 25	1	
	25-60009- 9	*	95 - 21	1	
	25-60009- 11	*		1	
	25-60009- 13			2	
	25-60012- 1		83 - 22	1	G-265
R82MDA-	25-60050- 3	P1	81 - 35	2	C-4
			81 -		
R82MDA-	25-60050- 5	P1	81 - 33	5	
			81 -		
			81 -		
			81 -		
R82MDA-	25-60052- 3		81 - 61	1	C-6
	25-60053- 3			1	

STOCK	PART NUMBER	SOURCE CODE	FIGURE & INDEX NO.	QTY. PER A/C	MICROFILM INDEX
	25-60053- 5			1	
	25-60053-3-5C			2	
	25-60057- 1		68 -	1	G-266
R82MDA-	25-60057- 3	P1	68 - 4	1	
	25-60058- 9			1	G-267
	25-60058- 10	X1		1	
	25-60058- 11	X1		1	
	25-60058- 12	X1		1	
	25-60058-10-12	X1		1	
	25-60058-301	X1	68 - 12	1	
	25-60058-303	X1	68 - 13	1	
	25-60058-9-11			1	
R82MDA-	25-60060- 3		81 - 43	1	C-7
	25-60061- 21		68 - 73	1	D-52
	25-60061- 37	M	68 - 29	1	
	25-60061- 39	M	68 - 33	1	
	25-60061- 41	M	68 - 41	1	
	25-60061- 43	M	68 - 56	1	
	25-60061- 45	M	68 - 59	1	
	25-60061- 47	M	68 - 61	1	
	25-60061- 49	M	68 - 64	1	
	25-60061- 53	M	68 - 26	1	
	25-60061- 59	M	68 - 37	1	
	25-60061- 61	M	68 - 35	1	
	25-60061- 63	M	68 - 31	1	
	25-60061- 65	M	68 - 28	1	
	25-60061- 67	M	68 - 39	1	
	25-60061- 69	M	68 - 55	1	
	25-60061- 71	M	68 - 58	1	
	25-60061- 73	M	68 - 63	1	
	25-60061- 75	M	68 - 71	1	
	25-60061- 79	M	68 - 24	1	
	25-60061- 81	M	68 - 69	1	
	25-60061- 83	M		1	
	25-60061-1021	M		1	
	25-60061-1037	M		1	
	25-60061-1039	M		1	
	25-60061-1041	M		1	
	25-60061-1043	M		1	
	25-60061-1045	M		1	
	25-60061-1047	M		1	
	25-60061-1049	M		1	
	25-60061-1053	M		1	
	25-60061-1059	M		1	
	25-60061-1061	M		1	
	25-60061-1063	M		1	
	25-60061-1065	M		1	
	25-60061-1067	M		1	
	25-60061-1069	M		1	
	25-60061-1071	M		1	
	25-60061-1073	M		1	
	25-60061-1075	M		1	
	25-60061-1079	M		1	
	25-60061-1081	M		1	
	25-60061-1083	M		1	
	25-60062- 1		93 - 9	1	D-53
	25-60062-301	A	93 - 9	1	
	25-60063- 3		93 - 12	1	A-493
	25-60064- 3		68 -	1	C-8
	25-60064- 3C			1	
	25-60065- 1		68 - 11	1	D-54
	25-60065- 3	X1		1	
	25-60065- 7	X1		1	
	25-60067- 5		68 - 10	1	C-9
R82MDA-	25-60068- 3		82 - 24	6	C-10
	25-60068- 3C	X1		8	
	25-60069- 3		82 - 3	4	A-58
R82MDA-	25-60070- 3	P1	76 - 12	2	C-11
			82 - 20		
R82MDA-	25-60070- 5	P1	82 - 8	1	
R82MDA-	25-60071- 3	P1	76 - 5	10	C-12
			80 - 4		
			81 - 26		
			81 -		
			81 -		
			82 - 30		
	25-60072- 1		81 - 73	1	C-13
	25-60072- 2	M1	81 - 74	1	
	25-60072- 3	M1		1	
	25-60072- 4	M1		1	
	25-60073- 3		45 - 32	2	C-14
	25-60073- 3C	X1		2	
	25-60074- 7		81 - 29	1	A-494
	25-60075- 3		81 - 31	1	A-495
	25-60076- 3		81 - 75	1	C-15
	25-60077- 3		94 - 24	1	C-16
	25-60077- 5	M	94 - 22	1	
	25-60077- 7	M	81 - 14	1	
	25-60077- 9	M	93 - 19	1	
	25-60077- 11	M	93 - 24	1	
	25-60077- 13	M	93 - 26	1	
	25-60077- 15	M	93 - 7	1	
	25-60077- 17	M	93 - 5	1	
	25-60077- 19	M	93 - 8	1	
	25-60077- 23	M1	93 - 21	1	
	25-60077- 25	M1	93 - 20	1	

STOCK	PART NUMBER	SOURCE CODE	FIGURE & INDEX NO.	QTY. PER A/C	MICROFILM INDEX
	25-60077- 27		81 - 16	1	
	25-60077-1003	M		1	
	25-60077-1005	M		1	
	25-60077-1007	M		1	
	25-60077-1009	M		1	
	25-60077-1011	M		1	
	25-60077-1013	M		1	
	25-60077-1015	M		1	
	25-60077-1017	M		1	
	25-60077-1019	M		1	
	25-60077-1023	M1		1	
	25-60077-1025	M1		1	
	25-60077-1027			1	
	25-60078- 1		81 - 18	1	A-496
	25-60078- 3	M1		1	
	25-60079- 1		81 -	1	A-497
	25-60080- 1		81 -	1	A-498
	25-60081			1	C-17
	25-60084- 1	A	81 -	1	C-18
R16MDA-	25-60085- 1		81 - 27	1	C-19
	25-60085- 3	X1		1	
	25-60087- 1		82 -	1	A-501
	25-60089- 1		82 -	1	A-502
	25-60090- 1		68 -	1	C-20
	25-60091- 1		81 - 44	1	
	25-60091- 3		81 -	1	
	25-60094- 3			1	C-21
	25-60094- 7	M		1	
	25-60094- 9	M	81 - 58	1	
	25-60094- 11	M	81 - 59	1	
	25-60094- 13	A1	81 - 57	1	
	25-60094- 15	M1	81 -	1	
	25-60095- 1	A1	82 - 9	1	
	25-60095- 3	A1	82 - 19	1	
	25-60096- 1		73 - 47	1	G-268
	25-60096- 3	X1		1	
R82MDA-	25-60097- 1		81 - 44	1	A-503
	25-60097- 5	M1	81 -	1	
	25-60098- 3	X1	82 - 13	1	
	25-60098- 3C	X1		1	
R82MDA-	25-60099- 1		82 - 11	1	A-505
	25-60099- 3	M1	82 - 15	1	
	25-60100- 3			1	A-506
	25-60100- 3C	X1		2	
	25-60100- 5			1	
	25-60101- 5		83 - 25	1	A-507
	25-60102- 1		83 - 1	1	C-23
	25-60103- 3	M	85 -	1	A-508
			85 - 15		
	25-60104- 1		39 - 5	1	C-24
	25-60104- 3	M1		1	
	25-60105- 1		68 - 51	1	A-509
	25-60105- 3	M1		1	
	25-60106- 3		68 - 44	1	A-510
	25-60107- 3			1	A-511
	25-60108- 3		68 - 5	1	A-512
	25-60109- 3		68 - 6	1	A-513
	25-60110- 1		81 -	1	C-25
	25-60110- 3	M1	81 - 64	1	
	25-60111- 3		73 - 51	1	D-55
	25-60111- 5		73 - 51	1	
	25-60112- 3		93 - 13	1	A-514
	25-60115- 1			1	
	25-60116- 1			1	
	25-60116- 3			1	
	25-60117- 3			1	
R82MDA-	25-61001- 1		55 - 30	1	D-56
	25-61001- 3	X1		1	
	25-61001- 3F	X1		1	
R82MDA-	25-61002- 1		55 - 40	1	D-57
	25-61002- 3	X1		1	
	25-61002- 3F	X1		1	
R82MDA-	25-61003- 1		55 - 52	1	D-58
	25-61003- 3	X1		1	
	25-61003- 3F	X1		1	
R82MDA-	25-61005- 1		55 -121	1	D-60
	25-61005- 3F	X1		1	
	25-61005- 7			1	
R82MDA-	25-61006- 1		55 -133	1	C-26
R82MDA-	25-61007- 1		55 -131	1	C-27
R82MDA-	25-61008- 1		55 - 75	1	D-61
	25-61008- 3	X1		1	
	25-61008- 3F	X1		1	
R82MDA-	25-61009- 1	P1	55 - 73	2	D-62
			61 - 24		
	25-61009- 3	X1		2	
	25-61009- 3F	X1		2	
	25-61010- 1	A1	55 -151	1	G-269
			57 -		
R82MDA-	25-61011- 1		55 - 17	1	D-63
	25-61011- 3	X1		1	
	25-61011- 3F	X1		1	
R82MDA-	25-61012- 1		57 - 35	1	D-64
R82MDA-	25-61012- 2	P1	57 - 36	1	
	25-61012- 3	X1		1	
	25-61012- 3F	X1		1	

STOCK	PART NUMBER	SOURCE CODE	FIGURE & INDEX NO.	QTY. PER A/C	MICROFILM INDEX
	25-61012- 4	X1		1	
	25-61012- 4F	X1		1	
R82MDA-	25-61013- 3		57 - 46	1	D-65
	25-61013- 3F	X1		1	
R82MDA-	25-61014- 3		57 - 39	1	D-66
	25-61014- 3F	X1		1	
R82MDA-	25-61015- 1		56 - 22	1	G-270
	25-61015- 3	X1		1	
	25-61015- 3F	X1		1	
R82MDA-	25-61016- 1		55 - 62	1	G-271
	25-61016- 3	X1		1	
	25-61016- 3F			1	
R82MDA-	25-61018- 1		55 -135	2	C-28
	25-61018- 3	X1		2	
	25-61019- 3			2	D-67
	25-61019- 3F	X1		2	
	25-61020- 1	*	55 -150	1	G-272
			56 -		
R82MDA-	25-61021- 1		56 - 45	1	D-68
	25-61021- 3	X1		1	
	25-61021- 3F	X1		1	
R82MDA-	25-61022- 1		56 - 38	1	G-273
	25-61022- 3	X1		1	
	25-61022- 3F	X1		1	
	25-61023- 3			1	D-69
	25-61023- 3F	X1		1	
R82MDA-	25-61024- 3		47 - 88	1	D-385
	25-61024- 3C	X1		1	
	25-61025- 3			1	D-70
	25-61025- 3F	X1		1	
R82MDA-	25-61026- 1		55 - 50	1	D-71
	25-61026- 3	X1		1	
	25-61026- 3F	X1		1	
R82MDA-	25-61027- 1		45 - 39	1	G-274
	25-61027- 3	X1		1	
	25-61027- 3F	X1		1	
	25-61029- 1		57 - 48	1	XA-263
	25-61029- 3	X1		1	
	25-61029- 3C	X1		1	
	25-61030- 1		57 - 7	1	G-276
	25-61030- 2	X2	57 - 8	1	
	25-61030- 3	X1		1	
	25-61030- 4	X1		1	
	25-61030- 5	M1		2	
	25-61030- 7	M1		2	
	25-61030- 9			2	
	25-61030-3-4C	X1		2	
	25-61031- 1		57 - 30	2	D-72
	25-61031- 3	X1	57 - 34	2	
	25-61031- 3C	X1		2	
R82MDA-	25-61033- 5		56 - 32	1	G-277
	25-61033- 7	X1		1	
	25-61033- 7C	X1		1	
R82MDA-	25-61034- 3		56 - 36	1	G-278
	25-61034- 3F	X1		1	
	25-61035- 1		57 - 23	2	A-516
	25-61035- 3	M1		2	
	25-61037- 3		55 - 65	1	G-279
	25-61037- 7	M1	55 - 42	1	
	25-61037- 9	M1	55 - 1	1	
	25-61037- 11	M1	55 - 9	1	
	25-61037- 13	M1		1	
	25-61037- 15	M1	55 - 32	1	
	25-61037- 19	M1	55 - 85	1	
	25-61037- 21	M1	55 -104	1	
	25-61037- 23	M1	55 -123	1	
	25-61037- 25	M1	61 - 1	1	
	25-61037- 27	M1	61 - 19	1	
	25-61037- 29	M1	61 - 26	1	
	25-61037- 31	P	117 - 1	1	
	25-61037- 33	M1	117 - 11	1	
	25-61037- 35	M1	117 - 20	1	
	25-61037- 37	M1	116 - 14	1	
	25-61037- 39	M1	116 - 23	2	
	25-61037- 41	M1	116 - 32	2	
	25-61037- 43	M1	116 - 39	1	
	25-61037- 45	M1	116 - 47	3	
	25-61037- 47	M1	116 - 56	2	
	25-61037- 49	M1	116 - 65	1	
	25-61037- 51	M1	146 - 2	2	
	25-61037- 53	M1	146 - 9	2	
	25-61037- 55	M1	146 - 18	1	
	25-61037- 57	M1	146 - 24	1	
	25-61037- 59	M1	146 - 33	1	
	25-61037- 61	M1	26 - 1	4	
	25-61037- 63	M1	26 - 8	2	
	25-61037- 67	M1	10 -	2	
	25-61037- 69	M1	57 - 10	2	
	25-61037- 75	M1	55 - 53	1	
	25-61037- 77	M1	55 - 78	1	
	25-61037- 79		10 - 26	4	
	25-61037- 81	M1	10 - 16	4	
	25-61037- 83	M1	146 - 43	1	
	25-61037- 87	M1		2	
	25-61037- 89	M1		2	
	25-61037- 91	M1	55 - 19	1	

STOCK	PART NUMBER	SOURCE CODE	FIGURE & INDEX NO.	QTY. PER A/C	MICROFILM INDEX
	25-61037- 93			2	
	25-61037- 95			4	
	25-61037- 97		146 - 95	1	
	25-61037-103	M1	55 -	1	
	25-61037-107	M1	55 -	1	
	25-61037-109	M1	55 -	1	
	25-61037-111	M1	55 -	1	
	25-61037-113	M1		1	
	25-61037-115	M1	55 -	1	
	25-61037-119	M1	55 -	1	
	25-61037-121	M1	55 -	1	
	25-61037-123	M1	55 -	1	
	25-61037-125	M1	61 -	1	
	25-61037-127	M1	61 -	1	
	25-61037-129	M1	61 -	1	
	25-61037-131	M1	117 -	1	
	25-61037-133	M1	117 -	1	
	25-61037-135	M1	117 -	1	
	25-61037-137	M1	116 -	1	
	25-61037-139	M1	116 -	2	
	25-61037-141	M1	116 -	2	
	25-61037-143	M1	116 -	1	
	25-61037-145	M1	116 -	3	
	25-61037-147	M1	116 -	2	
	25-61037-149	M1	116 -	1	
	25-61037-151	M1	146 -	2	
	25-61037-153	M1	146 -	2	
	25-61037-155	M1	146 -	1	
	25-61037-157	M1	146 -	1	
	25-61037-159	M1	146 -	1	
	25-61037-161	M1	26 -	4	
	25-61037-163	M1	26 -	2	
	25-61037-167	M1	10 -	2	
	25-61037-169	M1	57 -	2	
	25-61037-175	M1	55 -	1	
	25-61037-177	M1	55 -	1	
	25-61037-179		10 -	4	
	25-61037-181	M1	10 -	4	
	25-61037-183	M1	146 -	1	
	25-61037-187	M1		2	
	25-61037-189	M1		2	
	25-61037-191	M1	55 -	1	
	25-61037-193			2	
	25-61037-195			4	
	25-61037-197		146 -	1	
	25-61037-203	M1	55 - 72	1	
	25-61037-207	M1	55 - 49	1	
	25-61037-209	M1	55 - 8	1	
	25-61037-211	M1	55 - 16	1	
	25-61037-213	M1		1	
	25-61037-215	M1	55 - 39	1	
	25-61037-219	M1	55 - 92	1	
	25-61037-221	M1	55 -111	1	
	25-61037-223	M1	55 -130	1	
	25-61037-225	M1	61 - 8	1	
	25-61037-227	M1	61 - 23	1	
	25-61037-229	M1	61 - 34	1	
	25-61037-231	M1	117 -	1	
	25-61037-233	M1	117 -	1	
	25-61037-235	M1	117 -	1	
	25-61037-237	M1	116 - 22	1	
	25-61037-239	M1	116 - 31	2	
	25-61037-241	M1	116 - 38	2	
	25-61037-243	M1	116 - 46	1	
	25-61037-245	M1	116 - 55	3	
	25-61037-247	M1	116 - 64	2	
	25-61037-249	M1	116 - 72	1	
	25-61037-251	M1		2	
	25-61037-253	M1		2	
	25-61037-255	M1		1	
	25-61037-257	M1		1	
	25-61037-259	M1		1	
	25-61037-261	M1		4	
	25-61037-263	M1		2	
	25-61037-267	M1		2	
	25-61037-269	M1	57 - 15	2	
	25-61037-275	M1	55 - 61	1	
	25-61037-277	M1	55 - 84	1	
	25-61037-279			4	
	25-61037-281	M1		4	
	25-61037-283	M1		1	
	25-61037-287	M1		2	
	25-61037-289	M1		2	
	25-61037-291	M1	55 - 26	1	
	25-61037-293			2	
	25-61037-295			4	
	25-61037-297			1	
R82MDA-	25-61038- 1		55 - 29	1	A-517
	25-61038- 3	X1		1	
	25-61038- 5	M1		13	
R82MDA-	25-61039- 1	P1	56 - 27	1	
	25-61039- 3			1	A-518
	25-61039- 5	M1		13	
R82MDA-	25-61040- 1		61 - 11	1	A-519
	25-61040- 3	X1		1	
	25-61040- 5	M1		1	

STOCK	PART NUMBER	SOURCE CODE	FIGURE & INDEX NO.	QTY. PER A/C	MICROFILM INDEX
	25-61041- 1		56 - 52	1	C-29
	25-61041- 3	M1		1	
	25-61043- 3		57 - 44	1	A-520
	25-61046- 3		57 - 37	1	A-521
	25-61047- 3		57 - 38	1	D-73
	25-61048- 1		56 - 9	1	D-74
	25-61048- 3	M1	56 - 18	1	
	25-61048-301			1	
	25-61049- 1		56 - 28	1	C-30
	25-61049- 3	M1		1	
	25-61050- 5		57 - 16	2	A-522
	25-61050- 7	M1	150 - 14	1	
	25-61050- 11		154 - 7	4	
	25-61050- 13		154 - 24	2	
	25-61052- 1		55 -112	1	C-32
	25-61052- 3	M1		1	
	25-61052- 5	M1		1	
	25-61052- 7	M1		1	
	25-61053- 3		55 -115	1	A-523
	25-61066- 3	M1	10 - 40	10	A-532
			26 - 13		
			50 - 19		
			116 - 37		
			148 - 9		
	25-61067- 3	M1	55 - 38	10	A-533
			55 - 48		
			55 - 71		
			55 - 91		
			56 - 31		
			117 - 8		
			146 - 15		
			146 - 28		
			146 - 38		
	25-61068- 3	M1	116 - 50	4	A-534
			116 - 68		
	25-61069- 3		116 - 20	1	A-535
	25-61069- 5	M1	116 - 29	2	
	25-61070- 3	M1	10 - 31	26	A-536
			26 - 6		
			55 - 14		
			55 - 59		
			55 -109		
			55 -128		
			61 - 7		
			61 - 22		
			61 - 33		
			116 - 19		
			116 - 28		
			116 - 44		
			146 - 7		
			148 - 5		
	25-61070- 5	M1	55 - 6	1	
	25-61071- 3	M1	55 - 37	9	A-537
			55 - 47		
			55 - 70		
			55 - 90		
			117 - 7		
			146 - 14		
			146 - 27		
			146 - 37		
	25-61072- 1			1	C-33
	25-61072- 3	M1		1	
	25-61072- 5	M1		1	
	25-61073- 3	M1	10 - 32	24	A-538
			26 - 5		
			55 - 7		
			55 - 15		
			55 - 60		
			55 -110		
			55 -129		
			61 - 5		
			61 - 20		
			61 - 31		
			116 - 45		
			146 - 8		
			148 - 14		
	25-61074- 1	M1	116 - 62	4	A-539
			116 - 70		
			146 - 20		
	25-61074- 3	M1		4	
	25-61075- 1			1	A-540
	25-61075- 3	M1		1	
	25-61075- 5	M1		1	
	25-61076- 3		61 - 9	2	A-59
	25-61077- 3			1	A-541
	25-61078- 3			1	A-542
R82MDA-	25-61079- 3			1	D-75
	25-61079- 3F	X1[9]		1	
	25-61080- 1		55 - 95	1	D-76
	25-61080- 3	M1		1	
	25-61081- 3			1	C-34
	25-61082- 3			1	C-35
R82MDA-	25-61083- 1		55 -149	1	G-280
	25-61083- 9	M		1	
	25-61084- 3		56 - 29	1	A-543
	25-61085- 3		56 - 19	1	D-77

STOCK	PART NUMBER	SOURCE CODE	FIGURE & INDEX NO.	QTY. PER A/C	MICROFILM INDEX
	25-61086- 3		116 - 1	1	A-544
	25-61086- 4	M1	116 - 2	1	
	25-61087- 1		116 - 6	1	A-545
	25-61087- 2	M1	116 - 7	2	
	25-61087- 3	M1		1	
	25-61087- 4	M1		2	
	25-61088- 1	M1	116 - 12	1	D-78
	25-61088- 2	M1	116 - 13	1	
	25-61088- 3			4	
	25-61088- 5	M1		4	
	25-61088- 7	M1		2	
	25-61088- 9	M1		2	
	25-61088- 11	M1		2	
	25-61088- 13	M1		2	
	25-61089- 3		116 - 30	4	A-546
		M1	116 - 63		
			116 - 71		
	25-61089- 5	M1	55 - 25	4	
			116 - 21		
			146 - 21		
			146 - 47		
	25-61089- 7	M1	116 - 54	4	
	25-61090- 3	M1	55 - 24	5	A-547
			116 - 53		
			146 - 46		
	25-61091- 3	M1	55 - 21	4	A-548
			116 - 16		
			146 - 22		
			146 - 48		
	25-61092- 3	M1	117 - 15	2	A-549
			146 -100		
	25-61093- 3		58 - 1	1	A-60
	25-61094- 1		55 -140	2	D-79
	25-61094- 3	M1		2	
	25-61094- 5	M1		2	
	25-61094- 7	M1		2	
	25-61095- 3		55 -147	2	C-36
	25-61096- 3			1	A-550
	25-61097- 3		57 - 3	1	A-551
	25-61098- 3			1	A-552
	25-61099- 3		57 - 17	2	A-553
	25-61099- 7	M1	146 -121	1	
	25-61099- 9	M1	147 - 13	2	
	25-61100- 1		44 - 11	1	G-281
		*	55 -		
	25-61100-301	*	44 - 11	1	
			55 -		
	25-61101- 3		56 - 20	1	C-37
	25-61101- 3C	M1		1	
	25-61101- 4	M1	56 - 21	1	
	25-61101- 4C	M1		1	
R82MDA-	25-61102- 1		55 - 93	1	D-80
	25-61102-1-3	X1		1	
	25-61102-1-3F	X1		1	
	25-61103- 3		55 - 99	1	C-38
			58 -		
	25-61104- 1		58 - 11	1	A-554
	25-61104- 3	X1		1	
	25-61105- 3		58 - 13	1	A-555
R83MDA-	25-61106- 3		58 - 6	1	A-556
	25-61107- 3		58 - 3	1	A-557
	25-61108- 3		58 - 10	1	A-558
	25-61109- 1		58 - 9	1	A-559
	25-61109- 3	X1		1	
	25-61111- 3		58 - 8	1	A-561
	25-61112- 1			1	
	25-61112- 3		55 -116	1	
	25-61112- 5			1	
	25-61112- 7			1	
	25-61112- 9			2	
	25-61113- 3		55 -120	1	
	25-61114- 3		58 - 7	1	
	25-61160- 3		146 - 89	2	
	25-61161- 1		146 -	2	
	25-61161- 3			1	
	25-61163- 3		146 -128	2	
	25-61200- 1		106 - 23	1	G-282
		*	116 -		
R82MDA-	25-61201- 1		116 - 73	2	D-81
	25-61201- 3	X1		2	
	25-61201- 3F	X1		2	
R82MDA-	25-61202- 1		116 - 77	2	D-82
	25-61202- 3	X1		2	
	25-61202- 3F	X1		2	
R82MDA-	25-61203- 1		116 - 80	1	D-83
	25-61203- 3	X1		1	
	25-61203- 3F	X1		1	
R82MDA-	25-61204- 1		116 - 81	2	D-84
	25-61204- 3	X1		2	
	25-61204- 3F	X1		2	
R82MDA-	25-61205- 1		116 - 87	2	D-85
	25-61205- 3	X1		2	
	25-61205-3-4F	X1		2	
R82MDA-	25-61206- 1		116 - 84	2	D-86
	25-61206- 3	X1		2	
	25-61206- 3F	X1		2	

STOCK	PART NUMBER	SOURCE CODE	FIGURE & INDEX NO.	QTY. PER A/C	MICROFILM INDEX
R82MDA-	25-61208- 1		116 - 76	1	D-87
	25-61208- 3	X1		1	
	25-61208- 3F	X1		1	
R82MDA-	25-61209- 5		109 - 81	1	G-283
	25-61209- 5C	X1		1	
R82MDA-	25-61210- 1		109 - 72	1	D-88
	25-61210- 3	X1		1	
	25-61210- 3F	X1		1	
R82MDA-	25-61211- 3		108 - 73	1	D-89
	25-61211- 3F	X1		1	
R82MDA-	25-61212- 3		108 - 94	1	G-284
	25-61212- 3F	X1		1	
	25-61213- 1		109 -	1	D-90
	25-61214- 3		109 - 73	1	A-562
	25-61214- 4	M1	109 - 71	1	
	25-61215- 1		108 - 76	1	C-39
	25-61215- 3	M1		1	
	25-61215- 5	M1		1	
	25-61216- 4		109 - 74	1	D-91
	25-61216- 5	M1	108 - 77	1	
	25-61217- 1		108 -	1	G-285
R82MDA-	25-61218- 1	P1	146 - 83	2	
	25-61218-1-3			2	
	25-61218-1-3F			2	
	25-61219- 3	P1	146 - 61	1	
	25-61219- 3F			1	
	25-61220			1	
	25-61220- 3			2	
	25-61220- 3C			2	
	25-61220- 5	M1	146 - 92	3	
	25-61220- 5C	M1		3	
	25-61221- 3	M1	146 - 90	2	
	25-61222- 3			1	
	25-61223- 1		146 -122	1	
	25-61223- 3			2	
	25-61223- 5			1	
	25-61225- 3		146 -124	2	
	25-61226- 3	M1	146 - 87	4	
	25-61227- 3	M1	146 - 88	4	
	25-61230- 5		146 - 86	1	
	25-61230- 7			1	
	25-61231- 3		154 - 32	1	
	25-61231- 3F			1	
	25-61232- 3		154 - 30	1	
	25-61232- 3F			1	
	25-61233- 1		154 - 25	2	
	25-61233- 3			2	
	25-61233- 5			2	
	25-61234- 3		148 - 1	1	
	25-61235- 3		148 - 17	1	
	25-61236- 1		154 -	1	
	25-61238- 1		154 - 23	1	
	25-61238-1-3			1	
	25-61238-1-3F			1	
	25-61250- 1	*	15 - 6	1	D-386
			26 -		
	25-61250- 2	*	15 - 6	1	
			26 -		
	25-61250-301			1	
	25-61250-302			1	
R82MDA-	25-61251- 1	P1	26 - 16	1	G-286
R82MDA-	25-61251- 2		26 - 16	1	
	25-61251- 3	X1		1	
	25-61251- 3F	X1		1	
	25-61251- 4	X1		1	
	25-61251- 4F	X1		1	
	25-61252- 5	M1	20 - 77	4	
R82MDA-	25-61253- 1		26 - 32	2	D-92
R82MDA-	25-61253- 3	P1	10 - 12	7	
			26 - 34		
	25-61253- 5	X1		2	
	25-61253- 7	X1		7	
	25-61253- 9			2	
	25-61253- 11			1	
	25-61253-5-7F	X1		9	
	25-61254- 3	M1	148 - 15	1	
	25-61255- 1	M1	147 - 50	1	
	25-61255- 3	M1		1	
	25-61256- 3	M1	147 -	1	
	25-61257- 3	M1	147 - 7	1	
R82MDA-	25-61258- 1	P1	26 - 18	2	
	25-61259- 1	A1	26 - 24	2	
	25-61260- 1	X1	26 - 30	2	C-42
	25-61260- 3			2	
	25-61261- 5		26 - 21	2	A-563
	25-61262- 5		26 - 20	2	A-564
	25-61263- 3		26 - 29	2	A-565
R82MDA-	25-61264- 3	P1	26 - 28	2	
	25-61265- 3	M1	26 - 27	4	
	25-61266- 3	M1	10 - 38	6	
			26 - 23		
	25-61267- 3	M1		2	
	25-61268- 3	M1	26 - 25	2	
	25-61269- 3	M1	20 - 75	8	
	25-61270- 1	P	147 - 15	1	
			148 -		

STOCK	PART NUMBER	SOURCE CODE	FIGURE & INDEX NO.	QTY. PER A/C	MICROFILM INDEX
	25-61272- 3	M1	148 - 19	1	
R82MDA-	25-61273- 3	P1	146 - 94	1	
	25-61273- 3F	X1		1	
	25-61274- 1	M1	148 -	1	
	25-61274- 3	M1	148 -	1	
	25-61274- 5	M1	148 - 20	1	
	25-61274- 7	M1	148 - 16	1	
	25-61275- 3	M1		1	
	25-61275- 5		146 -	1	
	25-61275- 7			1	
	25-61276- 3	M1	146 - 94	1	
	25-61278- 1	M1	146 - 83	2	
	25-61278- 3	M1		2	
	25-61279- 3	M1	146 - 61	1	
	25-61280- 1	*	138 - 3	1	
			146 -		
	25-61280- 3	*	138 - 46	1	
			146 -		
	25-61281- 1		146 - 55	1	
	25-61281- 3	M1	146 - 63	1	
	25-61281- 5	M1	146 - 63	1	
	25-61281-301	A1	146 - 55	1	
	25-61283- 1	P1	147 - 12	1	
			148 -		
	25-61283- 3		148 - 2	2	
	25-61284- 3	M1	148 - 4	1	
	25-61285- 1	X1	148 -	1	
	25-61285- 3	M1	148 -	1	
	25-61285- 5	X1	148 - 6	1	
	25-61285- 7	M1	148 - 10	1	
R82MDA-	25-61287- 1		140 - 7	1	D-94
	25-61287- 3	X1	140 -	1	
	25-61287- 5	X1	140 -	1	
	25-61288- 3		140 - 16	1	C-44
	25-61289- 3		140 - 18	1	D-95
	25-61289- 3F	X1		1	
	25-61291- 3	X1	140 - 14	1	G-287
	25-61291- 3F			1	
	25-61292-			1	G-288
	25-61292- 3F	X1		1	
	25-61303- 3		147 - 43	1	A-572
R82MDA-	25-61304- 5		146 - 50	1	D-97
R82MDA-	25-61304- 7	P1	146 - 51	1	
	25-61304- 9	X1		1	
	25-61304- 11	X1		1	
	25-61304-9-11F	X1		2	
R82MDA-	25-61305- 1	P1	154 - 1	1	
			155 -		
R82MDA-	25-61306- 3	P1	147 - 36	1	
	25-61306- 3F			1	D-98
R82MDA-	25-61307- 3		147 - 38	1	D-99
	25-61307- 3F	X1		1	
R82MDA-	25-61308- 1		150 - 6	1	D-100
R82MDA-	25-61308- 2	M1	150 - 7	1	
	25-61308- 3	X1		1	
	25-61308- 3C	X1		1	
	25-61308- 4	X1		1	
	25-61308- 4C	X1		1	
R82MDA-	25-61309- 1	P1	147 - 18	2	C-47
	25-61309- 3			2	
	25-61309- 3F	X1		2	
	25-61310- 1	*	146 - 1	1	G-292
			147 -		
R82MDA-	25-61311- 1	P1	147 - 45	2	D-101
	25-61311- 3			2	
	25-61311- 3F	X1		2	
	25-61312- 3		150 - 15	1	A-573
	25-61313- 3		147 - 10	2	A-574
	25-61314- 5		150 - 20	1	C-48
R82MDA-	25-61315- 1	P1	147 - 1	1	
			149 -		
	25-61316- 1		146 - 80	1	A-575
	25-61316- 3	M1		1	
R82MDA-	25-61317- 1	P1	150 - 23	1	D-102
	25-61317- 3			1	
	25-61317- 7	M1	150 - 24	1	
	25-61318- 3		150 - 11	1	A-576
	25-61320- 1		147 - 48	1	G-295
		A	150 -		
	25-61321- 3		147 - 3		C-49
	25-61321- 5			1	
R83MDA-	25-61322- 1	P	153 - 1	1	C-50
	25-61322- 3			1	
R83MDA-	25-61323- 3		153 - 2	1	C-51
	25-61324- 3F			2	D-103
	25-61324- 5	P1	146 - 56	2	
R82MDA-	25-61328- 1		146 - 31	1	D-106
	25-61328- 3	X1		1	
	25-61328- 3F	X1		1	
R82MDA-	25-61329- 3	P1	146 - 81	1	G-297
	25-61329- 3F			1	
	25-61331- 1		146 - 73	1	D-107
R82MDA-	25-61332- 1		146 - 16	2	D-108
	25-61332- 3	X1		2	
	25-61332- 3F	X1		2	
R82MDA-	25-61333- 1	P1	146 - 41	1	D-109
	25-61333- 3			1	
	25-61333- 3F	X1		1	
	25-61334- 3F			1	G-299
	25-61334- 5			1	
	25-61334-301		146 -105	1	
R82MDA-	25-61340- 1		147 - 29	1	D-112
	25-61340- 3	X1		1	
	25-61340- 3F	X1		1	
	25-61341- 1		150 - 17	1	A-577
	25-61341- 3	M1		1	
R82MDA-	25-61342- 1	P1	150 - 21	1	
	25-61342- 3	X1		1	
	25-61342- 7	M1	150 - 22	1	
R82MDA-	25-61343- 1	P1	147 - 32	1	D-113
	25-61343- 3			1	
	25-61343- 3F	X1		1	
	25-61344- 3F			1	D-387
	25-61344- 9	P1	146 - 59	1	
	25-61346- 3		147 - 49	2	A-578
	25-61347- 1		147 - 34	1	D-114
	25-61347- 3	M1	147 - 40	1	
	25-61347- 5	M	147 - 41	1	
	25-61347- 7	M	147 - 42	1	
R82MDA-	25-61348- 3	P1	140 - 49	2	G-302
	25-61348- 7	X1	140 - 57	2	
	25-61348-5-7F			2	
R82MDA-	25-61350- 3		147 - 21	1	C-55
R82MDA-	25-61350- 4	P1	147 - 22	1	
	25-61350-3-4C	X1		2	
R82MDA-	25-61351- 3		146 - 77	1	G-303
	25-61351- 3F	X1		1	
R82MDA-	25-61352- 3	P1	146 - 75	1	
	25-61352- 3F	X1		1	
	25-61353- 5		146 - 79	1	
R82MDA-	25-61354- 1	P1	146 - 69	2	
R82MDA-	25-61356- 1	P1	150 - 4	2	C-56
	25-61356- 3			2	
	25-61356- 3F	X1		2	
R82MDA-	25-61357- 1	P	154 - 28	1	A-580
	25-61357- 3			1	
	25-61358- 3	M1	146 - 72	2	
	25-61359- 3	X1	149 - 12	1	G-304
	25-61359- 3C			1	
	25-61360- 1		149 - 21	1	D-118
	25-61360- 3	X1		1	
	25-61360- 5	X1		1	
	25-61360- 7	X1	149 - 6	1	
	25-61362- 3		149 - 14	1	A-581
	25-61363- 1			1	D-120
	25-61363- 3	M1		1	
	25-61363- 5	M1		1	
	25-61363- 7	M1		4	
	25-61363- 9	M1		2	
	25-61363- 11			1	
	25-61363- 13			1	
	25-61363- 15			2	
	25-61363-301		149 - 20	1	
	25-61364- 3		149 - 11	1	A-582
	25-61365- 1		149 - 10	1	C-57
	25-61365- 3	M1		1	
	25-61367- 3	M1	147 - 27	1	
	25-61371- 3	M1	147 - 9	2	
	25-61376- 3	M1	155 - 7	2	
R82MDA-	25-61377- 3	P	155 - 8	1	
R82MDA-	25-61378- 3		155 - 9	1	A-590
	25-61379- 3	M1	155 - 6	1	
R82MDA-	25-61380- 1	P1	155 - 11	1	C-60
	25-61380- 3			1	
R82MDA-	25-61381- 1		155 - 10	1	B-2
	25-61381- 3	M1		1	
	25-61382- 3	M1	155 - 14	1	
	25-61386- 1	M1	146 -115	1	B-7
	25-61386- 3			1	
	25-61387- 3		146 -112	2	B-8
	25-61388- 1		146 -107	1	C-61
	25-61388- 3	M1		1	
R82MDA-	25-61391- 3	P	155 - 13	1	
	25-61392- 3		150 - 19	5	A-63
R82MDA-	25-61393- 1		155 - 2	1	B-11
	25-61393- 3	M1		1	
R82MDA-	25-61395- 1	P1	146 -113	1	D-122
	25-61395- 3	X1		1	
	25-61395-1-3F			1	
	25-61396- 11		140 - 19	1	G-306
	25-61396- 13		140 - 21	1	
	25-61396- 15		140 - 22	1	
	25-61396- 17			1	
	25-61396- 19			1	
	25-61396-3-5F			2	
	25-61397- 3	M1	149 - 8	1	
R82MDA-	25-61398- 3	P	147 - 11	2	
	25-61400- 1	*	2 - 16	1	XA-264
			10 -		
	25-61400- 2	*	2 - 16	1	
			10 -		
	25-61400- 3	*	2 -	1	

STOCK	PART NUMBER	SOURCE CODE	FIGURE & INDEX NO.	QTY. PER A/C	MICROFILM INDEX
	25-61400- 4	*	2 -	1	
	25-61401- 1	M1	4 - 26	9	
	25-61401- 3	M1	4 -	9	
	25-61401- 5			4	
	25-61401-301			4	
	25-61402- 1	M1	10 - 14	4	B-15
	25-61402- 3			4	
	25-61403- 1		10 - 35	4	C-64
	25-61403- 3	M1		4	
	25-61404- 1	M1	10 - 46	4	
	25-61404- 3	M1		4	
	25-61405- 3	M1	10 - 45	4	
R82MDA-	25-61407- 1		10 - 47	4	D-124
	25-61407- 3	X1		4	
	25-61407- 3F	X1		4	
	25-61408			1	
R82MDA-	25-61415- 1	P1	10 - 22	1	
R82MDA-	25-61415- 2	P1	10 - 22	1	
	25-61415- 3	X1		1	
	25-61415- 3F	X1		2	
	25-61415- 4	X1		1	
R82MDA-	25-61416- 1	P1	10 - 33	4	
	25-61416-1-3	X1		4	
	25-61416-1-3F	X1		4	
	25-61417- 3		4 -	8	
	25-61451- 1		10 - 1	2	
	25-61451- 3			2	
	25-61452- 3		10 - 4	6	
	25-61453- 3		10 - 3	6	
	25-61475- 1			1	
	25-61475- 2			1	
	25-61475- 3			1	
	25-61475- 4			1	
	25-61475- 5			1	
	25-61475- 6			1	
	25-61476- 1			1	
	25-61476- 2			1	
	25-61476- 3			1	
	25-61476- 3F			2	
	25-61476- 4			1	
	25-61477- 3			2	
	25-61477- 5			2	
	25-61478- 3			4	
	25-61479- 3			4	
	25-61480- 3			4	
	25-61481- 1			2	
	25-61481- 3			2	
	25-61481- 5			2	
	25-61481- 7			2	
	25-61482- 1			2	
	25-61482- 3			2	
	25-61483- 3			2	
	25-61483- 3F			2	
	25-61484- 3			4	
	25-61486- 1			2	
	25-61486- 3			2	
	25-61487- 1			2	
	25-61487- 3			2	
	25-61488- 3			2	
	25-61488- 5			2	
	25-61490- 3			2	
	25-61491- 1			2	
	25-61491- 3			2	
	25-61493- 3			1	
	25-61494- 3			1	
	25-61494- 3C			1	
R83MDA-	25-67010- 3		28 - 63	1	G-308
		P1	31 -		
R83MDA-	25-67010- 5	P1	28 - 63	1	
			31 -		
	25-67011- 1	P1	31 - 16	6	D-126
	25-67011- 3			6	
	25-67013- 3		31 - 8	6	D-127
	25-67014- 3		31 - 20	5	C-66
	25-67015- 5	P1	31 - 13	5	
	25-67016- 1		31 - 1	5	C-67
	25-67016- 3	X1		5	
	25-67017- 3		31 - 19	6	B-18
	25-67301- 1		44 - 12	1	G-309
		*	60 -		
	25-67302- 1		15 - 5	1	G-310
		*	25 -		
	25-67302- 2	*	15 - 5	1	
			25 -		
	25-67303- 1		2 - 15	1	G-311
		*	8 -		
	25-67303- 2	*	2 - 15	1	
			8 -		
	25-67303-601			1	
	25-67303-602			1	
R82MDA-	25-67304- 3		8 - 1	4	C-70 G-312
			9 -		
			25 - 7		
	25-67304- 4		8 - 1	4	
			9 -		
			25 - 7		

STOCK	PART NUMBER	SOURCE CODE	FIGURE & INDEX NO.	QTY. PER A/C	MICROFILM INDEX
	25-67304-301			4	
	25-67304-302			4	
	25-67307- 5		9 - 20	8	G-313
	25-67307- 5C			8	
	25-67307- 6		9 - 20	8	
	25-67307- 6C			8	
R82MDA-	25-67308- 1	P1	9 - 14	16	C-71
	25-67308- 3			16	
	25-67308- 5	X1		16	
R82MDA-	25-67309- 5		9 - 19	8	B-20
R82MDA-	25-67309- 6	P1	9 - 19	8	
R82MDA-	25-67312- 3		9 - 11	8	C-72
R82MDA-	25-67312- 4	P1	9 - 11	8	
	25-67313- 5		9 - 15	32	B-21
R82MDA-	25-67314- 5		9 - 4	16	D-129
	25-67314- 7	X1		16	
	25-67315- 3		9 - 13	16	B-22
	25-67316- 3		9 - 12	16	B-23
R82MDA-	25-67317- 3		9 - 1	8	C-73
	25-67318- 5		8 - 23	16	C-74
			25 - 16		
	25-67320- 3	M1	25 - 20	5	B-24
			60 - 12		
	25-67321- 3			1	C-75
	25-67321- 5	M1	25 - 17	2	
	25-67321- 11			2	
	25-67321- 13			1	
	25-67321- 19	M1	8 - 35	1	
	25-67321- 23	M1	60 - 7	1	
	25-67321- 29	M1	25 - 4	2	
	25-67321- 31	M1	25 - 4	2	
	25-67321- 33	M1	25 - 25	2	
	25-67321- 35	M1	8 - 28	2	
	25-67321- 37	M1	25 - 24	2	
	25-67321- 39	M1	8 - 14	2	
	25-67321- 41	M1	25 - 23	2	
	25-67321- 43		60 - 6	1	
	25-67321- 45			1	
	25-67321- 47			1	
	25-67321- 49			1	
	25-67321- 51			1	
	25-67321- 53			2	
	25-67321- 55			2	
	25-67321- 57			2	
	25-67321- 59			4	
	25-67321-603			2	
	25-67324-__3		8 - 31	31	B-25
		M1	25 - 1		
			60 - 1		
	25-67324- 5	M1	25 - 2	10	
	25-67325- 3		8 - 15	14	B-26
		M1	25 - 21		
			60 - 4		
	25-67326- 1			2	
	25-67326- 2			2	
R82MDA-	25-67327- 3	P1	8 - 11	8	
			25 - 31		
	25-67328- 3		25 - 26	4	C-76
	25-67328- 5	M1	8 -	2	
	25-67328-301			2	
	25-67330- 3		8 - 18	40	B-28
		M	8 - 33		
			25 - 5		
			60 - 3		
			60 - 8		
	25-67331- 3	M	25 - 18	7	B-29
			60 - 18		
	25-67331- 5	M	8 - 29	5	
			60 - 10		
R82MDA-	25-67332- 1	P1	8 - 19	8	
			25 - 15		
	25-67332- 3	X1		16	
	25-67332- 5			16	
	25-67332-301			8	
R82MDA-	25-67333- 1	P1	8 - 27	8	
			25 - 12		
R82MDA-	25-67333- 2	P1	8 - 27	8	
			25 - 12		
	25-67333- 5	X1		8	
	25-67333- 6	X1		8	
	25-67333-3-4F	X1		8	
	25-67334- 3	M1	8 - 24	16	A-66
			25 - 14		
R82MDA-	25-67335- 3	P	8 - 25	16	
			25 - 13		
	25-67336- 3	M1	8 -	16	A-67
			25 -		
	25-67338- 3		9 - 7	32	B-30
R82MDA-	25-67339- 3	P1	8 - 26	16	
			25 - 8		
	25-67341- 3	M1	60 - 16	1	
	25-67342- 3	M1	60 - 14	1	
	25-67343- 1	M1	8 -	2	
	25-67344- 3	M1	8 - 34	2	
R82MDA-	25-67351- 3		25 - 35	4	B-34
	25-67352- 3		8 - 8	2	B-35

STOCK	PART NUMBER	SOURCE CODE	FIGURE & INDEX NO.	QTY. PER A/C	MICROFILM INDEX
	25-67352- 5			2	
R82MDA-	25-67353- 3	P1	8 - 10	8	B-36
			25 - 37		
	25-67354- 3	M1	8 - 13	8	B-37
			25 - 28		
	25-67355- 3	M1	8 - 9	8	A-68
			25 - 36		
	25-67356- 3	M1	8 - 7	16	A-69
			25 - 34		
	25-67357- 3	M1	8 - 6	8	A-70
			25 - 33		
	25-67358- 3	M1	8 - 17	2	
	25-67358- 5			2	B-38
	25-67359- 1		60 - 24	1	D-131
	25-67359- 3	M1		1	
	25-67359- 5	M1		1	
	25-67359- 7	M1		1	
	25-67359- 9	M1		1	
	25-67365- 3		9 - 9	16	B-39
R82MDA-	25-67366- 3		9 - 17	16	A-71
	25-67375- 1			1	
	25-67375- 2			1	
	25-67376- 1			1	
	25-67376- 2			1	
	25-67377- 9			2	
	25-67377- 17			2	
	25-67377- 19			2	
	25-67377- 21			1	
	25-67377- 23			1	
	25-67377- 25			2	
	25-67377- 27			2	
	25-67377- 29			2	
	25-67377- 31			2	
	25-67378- 3			8	
	25-68006- 1	*	73 - 27	1	XA-265
			85 -		
	25-68006-301	*	73 - 27	1	
			85 -		
	25-68007- 1		74 -	1	G-315
	25-68007-301		74 -	1	
	25-68050- 1		74 - 31	1	
	25-68050- 3			1	
	25-68050- 5			1	
	25-68051- 1		85 - 26	1	D-132
	25-68053- 3		85 - 20	1	B-41
	25-68054- 1		85 - 4	1	G-316
	25-68054- 3	M1		1	
	25-68054- 5	M1		1	
	25-68054- 7	M1		1	
	25-68055- 3		85 - 8	1	B-42
	25-68056- 3		85 - 10	1	B-43
R82MDA-	25-68057- 3		85 - 31	1	C-77
	25-68057- 3C	X1		1	
	25-68058- 3		85 - 33	1	C-78
	25-68058- 3C	X1		1	
R82MDA-	25-68059- 1		85 - 23	1	C-79
	25-68059- 3C	X1		1	
	25-68059- 5	X1		1	
	25-68060- 3		85 - 13	4	B-44
	25-68062- 3		85 - 7	1	B-45
	25-68063- 1		74 - 29	1	D-133
	25-68063- 3	X1	*	1	
	25-68063-1-3C	X1		1	
	25-68063-301			1	
	25-68064- 3		74 - 26	1	B-46
	25-68065- 3		74 - 31	1	C-80
	25-68066- 3		85 - 17	1	XA-31
	25-68100- 1	*	44 - 7	1	G-317
			59 -		
	25-68100- 3	M1		1	
	25-68100- 5			1	
	25-68102- 1	*	106 - 24	1	XA-266
			115 -		
	25-68103- 1		138 -	1	G-319
	25-68106- 3			2	C-81
	25-68108- 3			2	C-82
	25-68109- 3			1	C-83
	25-68109- 4	M1		1	
	25-68110- 3			1	C-84
	25-68110- 4	M1		1	
	25-68111- 3			1	C-85
	25-68111- 4	M1		1	
	25-68112- 3			1	C-86
	25-68113- 1			1	D-134
	25-68113- 3	M1		1	
	25-68114- 3			1	B-47
R82MDA-	25-68115- 1		115 - 21	1	D-135
	25-68115- 3	X1		1	
	25-68115- 3F	X1		1	
	25-68116- 3		115 - 19	1	B-48
	25-68117- 1			1	D-136
	25-68117- 2	M1		1	
	25-68117- 3	M1		1	
	25-68117- 4	M1		1	
	25-68117- 5	M1		1	
	25-68117- 6	M1		1	

STOCK	PART NUMBER	SOURCE CODE	FIGURE & INDEX NO.	QTY. PER A/C	MICROFILM INDEX
	25-68118- 3			1	C-87
	25-68119- 3			1	C-88
	25-68120- 3			1	C-89
	25-68121- 3		115 - 23	1	C-90
	25-68122- 3		108 - 78	1	C-91
	25-68124- 3		115 - 18	1	B-49
	25-68125- 3		108 - 79	1	C-93
	25-68126- 3		109 - 70	1	C-94
	25-68129- 3		115 - 3	5	A-72
	25-68130- 3		115 - 3	5	A-73
	25-68131- 3		115 - 4	1	A-74
	25-68132- 3		115 - 4	1	A-75
	25-68133- 1		115 - 6	1	B-50
	25-68133- 3	M1	138 - 17	1	
	25-68133- 5	M1	115 -	1	
	25-68133- 7	M1	138 -	1	
	25-68134- 3		138 - 19	1	C-95
	25-68135- 3			1	C-96
	25-68136- 1		115 - 26	1	D-137
	25-68136- 3	M1		1	
	25-68136- 5	M1		2	
	25-68137- 1		107 - 14	1	D-138
	25-68137- 3	M1		1	
	25-68137- 3F	M1		1	
	25-68138- 3		115 - 25	1	C-97
	25-68139- 3		115 - 24	1	C-98
	25-68140- 1		115 -	1	G-320
	25-68140- 3	M1		1	
	25-68140- 5	M1		1	
	25-68140- 7	M1		1	
	25-68140- 9	M1		1	
	25-68140- 11	M1	115 - 32	1	
	25-68140- 13	M1	115 - 35	1	
	25-68140- 15	M1		1	
	25-68140- 17	M1	115 - 31	1	
	25-68140-301	M1	115 -	1	
R82MDA-	25-68141- 1		115 - 36	1	XA-32
	25-68141- 3	M1		1	
	25-68142- 3		59 - 8	2	
	25-68143- 3			1	
	25-68144- 3			1	
	25-68145- 3			1	
	25-69001- 3	*	130 - 33	2	
			135 - 54		
	25-69002- 1	*	190 - 5	1	
	25-69003- 1	*	138 - 5	1	
			158 -		
			159 -		
	25-69003- 3		39 -	1	
	25-69006- 1	*	15 - 1	1	XA-276 THRU XA-279
			27 -		
			28 -		
	25-69006- 2	*	15 - 1	1	
			27 -		
			28 -		
	25-69006- 3	*	15 - 4	1	
			27 -		
			28 -		
	25-69006- 4	*	15 - 4	1	
			27 -		
			28 -		
	25-69006- 5		15 - 4	1	
			27 -		
			28 -		
	25-69006- 6		15 - 4	1	
			27 -		
			28 -		
	25-69007- 1	*	2 - 17	1	
			11 -		
	25-69007- 2	*	2 - 17	1	
			11 -		
	25-69007-301		2 - 17	1	
			11 -		
	25-69007-302		2 - 17	1	
			11 -		
	25-69008- 18	*	158 - 68	3	
			158 - 71		
			158 - 72		
	25-69008- 38	*	28 -113	4	
			71 - 45		
			132 - 48		
	25-69008- 58	*	132 - 4	1	
			158 - 70		
	25-69008- 78	*	28 -108	2	
	25-69009- 1			1	
	25-69011- 5			1	
	25-69012- 3	*	129 - 71	1	
	25-69013- 1			1	
	25-69015- 2	*	153 - 7	1	
	25-69016- 1	*	88 - 8	1	
	25-69018-307		28 - 41	4	H-7
			29 -		
	25-69019-301		184 - 5	1	D-139
			186 -		
	25-69020- 1	P1	28 - 33	4	D-140

STOCK	PART NUMBER	SOURCE CODE	FIGURE & INDEX NO.	QTY. PER A/C	MICROFILM INDEX
	25-69020- 1		30 -		
	25-69022-301		28 - 86	3	
			29 -		
	25-69022-302		28 - 86	3	
			29 -		
	25-69025-301		145 - 1	1	
	25-69025-302		145 - 1	1	
	25-69026-305		156 - 18	2	H-9
			157 -		
R83MDA-	25-69028- 1	P1	144 - 1	1	D-142
	25-69029- 3		57 - 25	2	
	25-69030- 1	*	158 - 69	1	
	25-69031- 5		135 - 5	1	
	25-69031- 7		133 - 17	2	
			158 - 73		
	25-69031- 9			2	
	25-69033- 1	P1	130 - 59	1	H-10
			134 -		
	25-69033-301		130 - 59	2	
			134 -		
	25-69035-301		54 -	1	D-144
	25-69036- 1	P1	131 - 89	1	H-11
			134 -		
	25-69036-301		131 - 89	2	
			134 -		
	25-69037- 5		10 - 5	2	
	25-69038- 1	X1	57 - 29	2	
R82MDA-	25-69040- 1	P1	184 - 34	1	D-145
			187 -		
R83MDA-	25-69041- 1	P1	23 - 1	4	D-146
			24 -		
	25-69042- 1	X1	24 - 15	4	
	25-69042- 3	X1		4	C-99
	25-69043- 3	P1	24 - 18	4	C-100
	25-69044- 3	X1	24 - 7	4	C-101
	25-69046- 1	P	24 - 1	4	C-102
	25-69046- 3	X1		4	
R83MDA-	25-69047- 3	P	24 - 14	4	B-51
	25-69048- 1	*	132 - 29	1	
	25-69049- 1	*	28 -129	2	
	25-69051- 1	*	122 - 66	2	
	25-69055- 3	M1	29 - 10	4	B-52
	25-69056-301		28 - 26	4	XA-33
	25-69056-303			2	
	25-69057- 3	M1		4	
	25-69059- 1	*	150 - 13	1	
	25-69060- 1		55 -102	1	
	25-69060- 3		55 -102	1	
	25-69061- 3		154 - 26	1	
	25-69062- 3	M1	135 - 10	2	
	25-69062- 5	M1	135 - 37	2	
	25-69062- 7	M1	135 - 40	2	
	25-69062- 9	M1	135 - 39	2	
	25-69062- 11	M1	135 - 16	2	
	25-69062- 15	M1	135 - 13	2	
	25-69062- 17	M1	135 - 12	2	
	25-69062- 29	M1	128 - 17	1	
			129 - 9		
	25-69062- 31	M1	135 - 4	2	
	25-69062- 33	M1	135 - 7	2	
	25-69062- 35	M1	132 - 24	2	
	25-69062- 37	M1	132 - 19	2	
	25-69062- 39	M1	132 - 18	1	
	25-69062- 43	M1	132 - 1	2	
	25-69062- 47	M1	132 - 25	2	
	25-69062- 53	M1	132 - 27	2	
	25-69062- 55	M1		1	
	25-69062- 57		130 - 9	2	
	25-69062- 59		130 - 12	2	
	25-69062- 63		130 - 1	2	
	25-69062- 65		130 - 15	2	
	25-69062- 67		130 - 22	2	
	25-69062- 69		130 - 23	2	
	25-69062- 71			1	
	25-69062- 73		130 - 64	2	
	25-69062- 75		130 - 63	2	
	25-69062- 77		130 - 16	2	
	25-69062- 79		130 - 62	1	
	25-69062- 81		130 - 61	1	
	25-69062- 83		135 - 14	2	
	25-69062- 85		131 - 87	1	
	25-69062- 87		132 - 9	1	
	25-69062- 89		131 - 41	2	
	25-69062- 91		132 - 11	2	
	25-69062- 95			1	
	25-69062- 97			1	
	25-69062- 99			1	
	25-69062-1003	M1		2	
	25-69062-1005	M1		2	
	25-69062-1007	M1		2	
	25-69062-1009	M1		2	
	25-69062-101			1	
	25-69062-1011	M1		2	
	25-69062-1015	M1		2	
	25-69062-1017	M1		2	
	25-69062-1029	M1		1	

STOCK	PART NUMBER	SOURCE CODE	FIGURE & INDEX NO.	QTY. PER A/C	MICROFILM INDEX
	25-69062-103		130 - 31	2	
	25-69062-1031	M1		2	
	25-69062-1033	M1		2	
	25-69062-1035	M1		2	
	25-69062-1037	M1		2	
	25-69062-1039	M1		1	
	25-69062-1043	M1		2	
	25-69062-1047	M1		2	
	25-69062-1053	M1		2	
	25-69062-1055	M1		1	
	25-69062-1057			2	
	25-69062-1059			2	
	25-69062-1062			1	
	25-69062-1063			1	
	25-69062-1065			2	
	25-69062-1067			2	
	25-69062-1069			2	
	25-69062-1071			1	
	25-69062-1073			2	
	25-69062-1075			2	
	25-69062-1077			2	
	25-69062-1079			2	
	25-69062-1081			1	
	25-69062-1083			2	
	25-69062-1085			1	
	25-69062-1087			2	
	25-69062-1089			2	
	25-69062-109		130 - 50	2	
	25-69062-1091			2	
	25-69062-1095			1	
	25-69062-1097			1	
	25-69062-1099			1	
	25-69062-1101			1	
	25-69062-1103			2	
	25-69062-1109			2	
	25-69062-111		135 - 79	2	
	25-69062-1111			2	
	25-69062-1113			2	
	25-69062-1115			2	
	25-69062-1117			1	
	25-69062-1119			2	
	25-69062-113		135 - 80	2	
	25-69062-115		135 - 81	2	
	25-69062-117		135 - 82	1	
	25-69062-119		135 - 83	2	
	25-69062-1903			1	
	25-69063- 3	M1		4	
	25-69064- 3	M1	157 - 28	2	
	25-69065- 3	M	28 -	8	
	25-69068- 1	*	110 -	2	H-12
			130 - 27		
	25-69068- 2	M	110 -	2	
			130 - 28		
	25-69076- 3	M1	157 - 29	2	
	25-69077- 1	X1	157 - 36	2	H-13
	25-69077- 3			2	
	25-69077- 3F			2	
	25-69083- 1		11 - 17	32	
	25-69083- 3			32	
	25-69085- 3			32	
	25-69087- 5		186 - 23	1	H-20
	25-69087- 5F			1	
R83MDA-	25-69088- 3	P1	186 - 25	1	
	25-69089- 7	X1		1	D-149
	25-69089- 11			1	
	25-69089- 13			1	
	25-69089- 15		186 - 18	1	
	25-69089- 17			1	
R83MDA-	25-69090- 3	P1	186 - 15	1	
R83MDA-	25-69091- 3	P1	186 - 24	4	
	25-69092- 5			1	C-104
	25-69092- 7		186 - 6	1	
	25-69093- 7		27 - 24	2	
	25-69093- 9		27 - 21	2	
	25-69093- 11		27 - 11	2	
	25-69093- 13		27 - 8	2	
	25-69093- 15		28 - 56	8	
	25-69093-107			2	
	25-69093-109			2	
	25-69093-111			2	
	25-69093-113			2	
	25-69093-115			8	
	25-69094- 3			16	
R83MDA-	25-69095- 3	P1	186 - 9	1	
	25-69096- 3	M1	186 - 14	1	B-56
	25-69098- 1	*	106 -	1	
			129 -		
	25-69098-301		106 - 28	1	H-21
			129 -		
	25-69098-901		106 -	1	
			128 -		
	25-69099- 1	*	106 - 27	1	XA-287 THRU XA-293
			130 -		
			131 -		
			132 -		

STOCK	PART NUMBER	SOURCE CODE	FIGURE & INDEX NO.	QTY. PER A/C	MICROFILM INDEX
	25-69099- 1		133 -		
			135 -		
	25-69099-301		106 - 27	1	
			130 -		
			131 -		
			132 -		
			133 -		
			135 -		
	25-69101- 1	*	37 - 4	1	
			38 - 4		
	25-69101- 3			1	
	25-69111- 3	P1		2	C-105
	25-69111- 5		157 - 13	4	
R83MDA-	25-69112- 3	P1	157 - 5	2	
R83MDA-	25-69113- 1	P1	157 - 14	2	XA-73
	25-69113- 3	X1		2	
	25-69113- 5	X1		2	
	25-69113- 7	X1		2	
	25-69113- 9	X1		2	
	25-69113- 11	X1		2	
	25-69113- 13	X1		2	
	25-69114- 5	M1	157 - 27	2	B-59
	25-69115- 3	M1	157 - 25	2	B-60
	25-69116- 5	M1	157 - 26	2	
R83MDA-	25-69118- 5	P1	157 - 32	2	
R83MDA-	25-69119- 1	P1	157 - 22	2	C-107
	25-69119- 3	X1		2	
	25-69119- 5	X1		2	
R83MDA-	25-69120- 1	P1	145 - 19	2	D-151
	25-69120- 3	M1		2	
	25-69122- 3	X1		1	D-152
	25-69122- 5		186 - 1	1	
	25-69123- 5			2	C-108
	25-69123-301		145 - 4	2	
R83MDA-	25-69124- 3	P1	145 - 9	2	
	25-69126			2	
	25-69128- 11	M1	158 - 22	1	
	25-69128- 15	M1	158 - 24	1	
	25-69128- 19	M1	158 - 23	1	
	25-69128- 23	M1	158 - 25	1	
	25-69128- 29	M1	159 - 2	1	
	25-69128- 53	M1	159 - 5	1	
	25-69128- 85			1	
	25-69128- 87	M1	158 - 26	1	
	25-69128- 89	M1	158 - 27	1	
	25-69128- 95	M1	158 - 63	1	
	25-69128- 97	M1	158 - 57	1	
	25-69128- 99		159 - 9	1	
	25-69128-1011	M1		1	
	25-69128-1015	M1		1	
	25-69128-1019	M1		1	
	25-69128-1023	M1		1	
	25-69128-1029	M1		1	
	25-69128-1053	M1		1	
	25-69128-1087	M1		1	
	25-69128-1089	M1		1	
	25-69128-1095	M1		1	
	25-69128-1097	M1		1	
	25-69128-1099			1	
	25-69128-111		39 - 43	1	
	25-69128-113		39 - 41	1	
	25-69129- 3			1	
	25-69130- 3			1	
R83MDA-	25-69132- 3	P1	29 - 39	4	B-62
	25-69133- 7		29 - 40	6	XA-74
	25-69133- 9			6	
R83MDA-	25-69134- 5	P1	29 - 36	4	
	25-69135- 3	P1		2	C-111
	25-69135- 5		29 - 31	6	
	25-69136- 3	M1	29 - 27	4	
	25-69137- 3	M1		2	A-113
R83MDA-	25-69138- 3	P1	145 - 25	2	
	25-69141- 9	X1		2	C-113
	25-69141- 11			2	
	25-69141-301		145 - 24	2	
R83MDA-	25-69142- 3	P	145 - 10	4	
	25-69143- 1	*	57 -	1	
R82AIR3	25-69143- 3	*	57 - 19	2	
R82AIR2	25-69143- 5	*	57 - 20	1	
R82AIR2	25-69143- 7	*	57 - 21	1	
R82AIR3	25-69143- 9	*	57 - 22	1	
R82AIR2	25-69143- 13	*	57 - 18	1	
	25-69144- 3	M	70 -	1	B-66
	25-69145- 3	M1	69 - 39	2	B-67
R82MDA-	25-69146- 3	P	69 - 44	1	C-114
R82MDA-	25-69147- 3	P	69 - 49	1	C-115
	25-69148- 3	M		1	B-68
R82MDA-	25-69149- 3	P1	187 - 27	1	
	25-69150- 1	M1	187 - 26	1	
	25-69150- 3	M1		1	
R83MDA-	25-69151- 1	P1	12 - 14	2	C-116
	25-69151- 3	X1		2	
	25-69151- 5			2	
	25-69151- 7			2	
R83MDA-	25-69152- 3	P	12 - 17	8	B-71
R83MDA-	25-69153- 3	P1	12 - 18	4	C-117
R83MDA-	25-69154- 3	P1	12 - 19	4	C-118
R83MDA-	25-69155- 3	P1	12 - 28	4	C-119
R83MDA-	25-69156- 3	P1	12 - 27	4	C-120
R82MDA-	25-69157- 1	P1	187 - 31	1	C-121
	25-69157- 3	X1		1	
R82MDA-	25-69158- 3	P1	187 - 8	1	
	25-69159- 1	M1	70 - 72	1	C-122
	25-69159- 3	X1		2	
	25-69159- 5	X1		2	
	25-69159- 7	M1		2	
R83MDA-	25-69161- 1	P1	12 - 3	2	C-124
	25-69161- 3	M1		2	
	25-69161- 5			2	
	25-69161- 7			2	
R83MDA-	25-69162- 3	P1	12 - 8	4	
	25-69163- 3	M1	12 - 31	4	
	25-69164- 3			1	
R82MDA-	25-69165- 1	P1	11 - 1	2	H-29
			12 -		
	25-69165- 3			2	
	25-69167- 3	M	69 - 59	1	B-74
	25-69167- 5	M	69 - 52	1	
	25-69167- 7	M	63 - 80	3	
			63 - 82		
			68 - 34		
			70 - 34		
	25-69167- 9	M	63 - 6	1	
	25-69167- 11		69 - 57	2	
	25-69167- 13		69 - 12	3	
	25-69168- 17	M1	158 - 31	1	
	25-69168- 23	M1	158 - 34	1	
	25-69168- 29	M1	158 - 32	1	
	25-69168- 33	M1	158 - 38	1	
	25-69168- 39	M1	158 - 48	1	
	25-69168- 41	M1	158 - 47	1	
	25-69168- 43	M1	158 - 6	1	
	25-69168- 45	M1	158 - 7	1	
	25-69168- 47	M1	158 - 8	1	
	25-69168- 49	M1	158 - 12	1	
	25-69168- 51	M1	158 - 11	1	
	25-69168- 53	M1	158 - 10	1	
	25-69168- 55	M1	158 - 56	1	
	25-69168- 73	M1	158 - 43	1	
	25-69168- 75	M1	158 - 46	2	
	25-69168- 77	M1	158 - 42	1	
	25-69168- 79	M1	158 - 35	1	
	25-69168- 81	M1	158 - 49	1	
	25-69168- 83	M1	158 - 36	1	
	25-69168- 85	M1	159 - 34	1	
	25-69168- 87	M1	158 - 9	1	
	25-69168- 93	M1	158 - 54	1	
	25-69168- 95	M1	158 - 50	1	
	25-69168- 97	M1	158 - 58	1	
	25-69168-1017	M1		1	
	25-69168-1023	M1		1	
	25-69168-1029	M1		1	
	25-69168-1033	M1		1	
	25-69168-1039	M1		1	
	25-69168-1041	M1		1	
	25-69168-1043	M1		1	
	25-69168-1045	M1		1	
	25-69168-1047	M1		1	
	25-69168-1049	M1		1	
	25-69168-1051	M1		1	
	25-69168-1053	M1		1	
	25-69168-1055	M1		1	
	25-69168-1073	M1		1	
	25-69168-1075	M1		2	
	25-69168-1077	M1		1	
	25-69168-1079	M1		1	
	25-69168-1081	M1		1	
	25-69168-1083	M1		1	
	25-69168-1085	M1		1	
	25-69168-1087	M1		1	
	25-69168-1093	M1		1	
	25-69168-1095	M1		1	
	25-69168-1097	M1		1	
	25-69169- 1	A	146 -101	1	
			193 -		
	25-69170- 3F	X1		8	C-126
R83MDA-	25-69171- 3	P1	30 - 8	4	D-157
R83MDA-	25-69171- 5	P1	30 - 16	4	
R83MDA-	25-69172- 3	P1	30 - 18	5	
R83MDA-	25-69173- 3	P1	30 - 13	5	C-128
	25-69174- 3	M1	30 - 17	10	
R83MDA-	25-69175- 1	P1	30 - 1	5	
	25-69175- 3			5	
	25-69176- 3F			4	
R83MDA-	25-69176- 5	P1	29 - 14	4	
	25-69178- 9		29 - 26	6	
	25-69179- 3	P1	29 - 25	8	B-77
	25-69180- 3	X1		4	D-160
	25-69180- 5	X1		4	
	25-69180- 7	X1		4	
R83MDA-	25-69180-301	P1	29 - 19	4	
R83MDA-	25-69183- 3	P	29 - 9	4	

STOCK	PART NUMBER	SOURCE CODE	FIGURE & INDEX NO.	QTY. PER A/C	MICROFILM INDEX
R82MDA-	25-69185- 3	P1		2	C-131
	25-69185- 5		27 - 7	2	
			27 - 25		
	25-69186- 1		44 - 14	1	
			69 -		
			70 -		
			71 -		
R82MDA-	25-69187- 3	P1	27 - 20	18	
			28 - 59		
	25-69189- 3		154 - 21	1	
	25-69190- 3F	X1		4	
	25-69190- 5	X1		4	
R83MDA-	25-69190-301	P1	29 - 22	4	
	25-69191- 1		154 - 8	1	
	25-69191- 3			1	
	25-69195- 1		158 - 33	2	
	25-69195- 3		158 - 39	2	
	25-69195- 39		28 -117	2	
	25-69195- 41		28 - 84	2	
	25-69195- 43		28 -120	2	
	25-69195- 45			2	
	25-69195- 47		28 -154	2	
	25-69195- 59		69 - 54	2	
	25-69195- 61		69 - 47	2	
	25-69195- 63		69 - 46	2	
	25-69195- 65		69 - 65	1	
	25-69195- 79		132 - 17	4	
	25-69195- 81		131 - 21	1	
	25-69195- 83		64 - 55	1	
	25-69195- 87		64 - 30	1	
	25-69195- 91			2	
	25-69195- 93			2	
	25-69195- 95		130 - 20	2	
	25-69195- 97		130 - 19	2	
	25-69195- 99		130 - 24	2	
	25-69195-101		130 - 25	2	
	25-69195-107	M1	129 - 27	1	
	25-69195-109	M1	129 - 38	1	
	25-69195-111	M1	129 - 43	1	
	25-69195-113	M1	129 - 26	1	
	25-69195-115			1	
	25-69195-117			1	
	25-69195-119		28 - 36	2	
	25-69195-125			1	
	25-69195-129		154 - 4	1	
	25-69195-131		28 - 46	2	
	25-69195-133		28 - 45	2	
	25-69195-135		28 - 21	2	
	25-69195-137		64 - 35	2	
	25-69195-139		131 - 9	2	
	25-69195-141		131 - 54	2	
	25-69195-143		158 - 52	2	
	25-69195-145		158 - 59	1	
	25-69195-147		158 - 60	1	
	25-69195-149		128 - 10	1	
	25-69195-151		128 - 4	1	
	25-69195-153		28 - 39	2	
	25-69195-155		28 - 80	2	
	25-69195-157		28 -150	2	
	25-69195-159		69 - 67	1	
	25-69195-161		132 - 22	2	
	25-69195-163		132 - 20	2	
	25-69195-165		135 - 36	1	
	25-69195-167		132 - 16	2	
	25-69195-169		135 - 66	2	
	25-69195-171			1	
	25-69195-175		159 - 21	1	
	25-69195-177		158 - 51	2	
	25-69195-179		159 - 24	1	
	25-69195-183		39 - 49	1	
	25-69195-185		39 - 51	1	
	25-69195-187		39 - 50	1	
	25-69195-189		39 - 52	1	
	25-69195-191		27 - 39	2	
	25-69195-193		27 - 40	2	
	25-69195-195		27 - 39	2	
	25-69195-197		27 - 40	2	
	25-69196- 1		154 - 5	1	
	25-69197- 3		154 - 22	1	
	25-69198- 3		154 - 14	1	
	25-69199- 1		154 - 12	1	
	25-69199- 3			1	
	25-69201- 3			5	
	25-69202- 5			4	
	25-69202-301		29 - 1	4	
	25-69203- 3		71 - 42	1	
	25-69203- 5		71 - 44	1	
	25-69203- 7		70 - 57	1	
	25-69203- 9		71 - 39	1	
	25-69203- 11		71 - 41	1	
	25-69203- 13		70 - 55	1	
	25-69203- 15		70 - 67	1	
	25-69203- 17		70 - 69	1	
	25-69203- 19		70 - 58	1	
	25-69203- 21		71 - 34	1	
	25-69203- 23			1	
	25-69203- 25			1	
	25-69203- 27			1	
	25-69203- 29			1	
	25-69203- 31			2	
	25-69203- 33			1	
	25-69203- 35			1	
	25-69203- 37			1	
	25-69203- 39			1	
	25-69203- 41			2	
	25-69203- 43			1	
	25-69203- 45			1	
	25-69203- 47			1	
	25-69203- 49			1	
	25-69203- 51			2	
	25-69203- 53			2	
	25-69203- 55			2	
	25-69203- 57			2	
	25-69203- 59			1	
	25-69203- 61			1	
	25-69203-1003			1	
	25-69203-1005			1	
	25-69203-1007			1	
	25-69203-1009			1	
	25-69203-1011			1	
	25-69203-1013			1	
	25-69203-1015			1	
	25-69203-1017			1	
	25-69203-1019			1	
	25-69203-1021			1	
	25-69203-1023			1	
	25-69203-1025			1	
	25-69203-1027			1	
	25-69203-1029			1	
	25-69203-1031			2	
	25-69203-1033			1	
	25-69203-1035			1	
	25-69203-1037			1	
	25-69203-1039			1	
	25-69203-1041			2	
	25-69203-1043			1	
	25-69203-1045			1	
	25-69203-1051			2	
	25-69203-1053			2	
	25-69203-1055			2	
	25-69203-1057			2	
	25-69203-1059			1	
	25-69203-1061			1	
	25-69204- 3		71 - 18	1	
	25-69204- 5		71 - 20	1	
	25-69204- 7		70 - 26	1	
	25-69204- 9		70 - 24	1	
	25-69204- 11		69 - 61	1	
	25-69204- 13		69 - 60	1	
	25-69204- 15		71 - 21	1	
	25-69204- 17		71 - 22	1	
	25-69204- 19		70 - 29	1	
	25-69204- 21		70 - 28	1	
	25-69204- 23		69 - 58	1	
	25-69204- 25		69 - 56	1	
	25-69204- 27		71 - 14	2	
	25-69204- 29		71 - 17	1	
	25-69204- 31		71 - 16	1	
	25-69204- 35		70 - 15	1	
	25-69204- 37		69 - 31	1	
	25-69204- 39		69 - 34	1	
	25-69204- 41		69 - 42	1	
	25-69204- 43		69 - 43	1	
	25-69204- 45		71 - 8	2	
	25-69204- 47		71 - 12	1	
	25-69204- 49		71 - 11	1	
	25-69204- 51		70 - 21	1	
	25-69204- 53		70 - 19	1	
	25-69204- 55		69 - 53	1	
	25-69204- 57		69 - 51	1	
	25-69204- 59		71 - 23	1	
	25-69204- 61		71 - 25	1	
	25-69204- 63		71 - 26	1	
	25-69204- 65		71 - 57	1	
	25-69204- 67		71 - 58	1	
	25-69204- 69		71 - 55	1	
	25-69204- 71		71 - 54	1	
	25-69204- 73		71 - 27	1	
	25-69204- 75		71 - 28	1	
	25-69204- 77		71 - 29	1	
	25-69204- 79		71 - 51	1	
	25-69204- 81		71 - 53	1	
	25-69204- 83		71 - 49	1	
	25-69204- 85		71 - 47	1	
	25-69204- 87		71 - 35	1	
	25-69204- 89		71 - 36	1	
	25-69204- 91		70 - 39	1	
	25-69204- 93		70 - 38	1	
	25-69204- 95		70 - 36	1	
	25-69204- 97		69 - 63	1	
	25-69204- 99		71 - 37	1	
	25-69204-1003			1	

STOCK	PART NUMBER	SOURCE CODE	FIGURE & INDEX NO.	QTY. PER A/C	MICROFILM INDEX
	25-69204-1005			1	
	25-69204-1007			1	
	25-69204-1009			1	
	25-69204-101		71 - 38	1	
	25-69204-1011			1	
	25-69204-1013			1	
	25-69204-1015			1	
	25-69204-1017			1	
	25-69204-1019			1	
	25-69204-1021			1	
	25-69204-1023			1	
	25-69204-1025			1	
	25-69204-1027			2	
	25-69204-1029			1	
	25-69204-103		70 - 33	1	
	25-69204-1031			1	
	25-69204-1035			1	
	25-69204-1037			1	
	25-69204-1039			1	
	25-69204-1041			1	
	25-69204-1043			1	
	25-69204-1045			2	
	25-69204-1047			1	
	25-69204-1049			1	
	25-69204-105		70 - 32	1	
	25-69204-1051			1	
	25-69204-1053			1	
	25-69204-1055			1	
	25-69204-1057			1	
	25-69204-1059			1	
	25-69204-1061			1	
	25-69204-1063			1	
	25-69204-1065			1	
	25-69204-1067			1	
	25-69204-1069			1	
	25-69204-107		71 - 30	1	
	25-69204-1071			1	
	25-69204-1073			1	
	25-69204-1075			1	
	25-69204-1077			1	
	25-69204-1079			1	
	25-69204-1081			1	
	25-69204-1083			1	
	25-69204-1084			1	
	25-69204-1085			1	
	25-69204-1087			1	
	25-69204-109		71 - 32	1	
	25-69204-1091			1	
	25-69204-1093			1	
	25-69204-1095			1	
	25-69204-1097			1	
	25-69204-1099			1	
	25-69204-1101			1	
	25-69204-1103			1	
	25-69204-1105			1	
	25-69204-1107			1	
	25-69204-1109			1	
	25-69204-111		70 - 16	1	
	25-69204-1111			1	
	25-69205- 3			4	
	25-69207- 3		159 - 29	1	
	25-69207- 5		159 - 26	1	
	25-69207- 7		159 - 27	1	
	25-69207- 9		159 - 7	1	
	25-69207- 11		158 - 15	1	
	25-69207- 13		158 - 17	1	
	25-69207- 15		158 - 16	1	
	25-69207- 17		158 - 14	1	
	25-69207- 19		158 - 13	1	
	25-69207- 21		158 - 5	1	
	25-69207- 23		158 - 4	1	
	25-69207- 25		158 - 3	1	
	25-69207- 27		158 - 2	1	
	25-69207- 29		158 - 18	1	
	25-69207- 31		158 - 64	1	
	25-69207- 33		158 - 65	1	
	25-69207- 35		159 - 40	1	
	25-69207- 39		159 - 43	1	
	25-69207- 45		158 - 67	1	
	25-69207- 47		158 - 66	1	
	25-69207- 49		159 - 53	1	
	25-69207- 55		159 - 49	1	
	25-69207- 57		159 - 47	1	
	25-69207- 59		158 - 19	1	
	25-69207- 61		159 - 33	1	
	25-69207- 69		39 - 47	2	
	25-69207- 71		39 - 48	2	
	25-69207- 73		159 - 44	1	
	25-69207- 75		159 - 46	1	
	25-69207- 77			1	
	25-69207- 79			1	
	25-69207- 81			1	
	25-69207- 83			1	
	25-69207- 85		159 - 35	1	
	25-69207- 87		159 - 36	1	
	25-69207- 89		159 - 3	1	

STOCK	PART NUMBER	SOURCE CODE	FIGURE & INDEX NO.	QTY. PER A/C	MICROFILM INDEX
	25-69207- 91		159 - 4	1	
	25-69207- 93		159 - 16	1	
	25-69207- 95		159 - 17	1	
	25-69207- 97		159 - 32	1	
	25-69207- 99		159 - 31	1	
	25-69207-1003			1	
	25-69207-1005			1	
	25-69207-1007			2	
	25-69207-101		159 - 30	1	
	25-69207-1011			1	
	25-69207-1013			1	
	25-69207-1015			1	
	25-69207-1017			1	
	25-69207-1019			1	
	25-69207-1021			1	
	25-69207-1023			1	
	25-69207-1025			1	
	25-69207-1027			1	
	25-69207-1029			1	
	25-69207-103		159 - 41	1	
	25-69207-1031			1	
	25-69207-1033			1	
	25-69207-1035			1	
	25-69207-1039			1	
	25-69207-1045			1	
	25-69207-1047			1	
	25-69207-1049			1	
	25-69207-105		159 - 42	1	
	25-69207-1055			1	
	25-69207-1057			1	
	25-69207-1059			1	
	25-69207-1061			1	
	25-69207-1067			2	
	25-69207-1069			2	
	25-69207-107		159 - 52	1	
	25-69207-1071			2	
	25-69207-1073			1	
	25-69207-1075			1	
	25-69207-1077			1	
	25-69207-1079			1	
	25-69207-1081			1	
	25-69207-1083			1	
	25-69207-1085			1	
	25-69207-1087			1	
	25-69207-1089			1	
	25-69207-109		159 - 51	1	
	25-69207-1091			1	
	25-69207-1093			1	
	25-69207-1095			1	
	25-69207-1097			1	
	25-69207-1099			1	
	25-69207-1101			1	
	25-69207-1103			1	
	25-69207-1105			1	
	25-69207-1107			1	
	25-69207-1109			1	
	25-69207-111		159 - 50	1	
	25-69207-1111			1	
	25-69207-1113			1	
	25-69207-113		159 - 38	1	
	25-69207-1603			1	
	25-69207-1605			1	
	25-69207-603			1	
	25-69207-605			1	
	25-69207-607			1	
	25-69208- 3		131 - 23	2	
	25-69208- 5		131 - 22	2	
	25-69208- 7		131 - 16	2	
	25-69208- 9		131 - 12	2	
	25-69208- 11		135 - 44	2	
	25-69208- 13		129 - 8	2	
	25-69208- 15		131 - 24	2	
	25-69208- 17		133 - 9	2	
	25-69208- 19		133 - 10	1	
	25-69208- 21		133 - 11	1	
	25-69208- 23		133 - 12	1	
	25-69208- 25		131 - 67	1	
			133 - 21		
	25-69208- 27		133 - 20	2	
	25-69208- 29		133 - 19	1	
	25-69208- 31		133 - 18	1	
	25-69208- 33		132 - 64	1	
	25-69208- 37		131 - 94	2	
	25-69208- 39		133 - 15	1	
	25-69208- 41		131 - 51	2	
	25-69208- 43		131 - 50	2	
	25-69208- 45		131 - 52	2	
	25-69208- 47		131 - 7	2	
	25-69208- 49		135 - 62	2	
	25-69208- 51		131 - 6	2	
	25-69208- 53		135 - 46	2	
	25-69208- 55		128 - 21	1	
			129 - 21		
	25-69208- 57		135 - 45	2	
	25-69208- 59		135 - 64	2	
	25-69208- 61		130 - 42	1	

STOCK	PART NUMBER	SOURCE CODE	FIGURE & INDEX NO.	QTY. PER A/C	MICROFILM INDEX
	25-69208- 63		130 - 44	1	
	25-69208- 65		130 - 41	1	
	25-69208- 69		130 - 37	2	
	25-69208- 71		130 - 36	2	
	25-69208- 73		135 - 59	1	
	25-69208- 75		135 - 57	1	
	25-69208- 77		131 - 42	2	
	25-69208- 79		131 - 61	2	
	25-69208- 81		135 - 55	2	
	25-69208- 85		132 - 76	2	
	25-69208- 87		135 - 58	1	
	25-69208- 89			1	
	25-69208- 91		135 - 49	1	
	25-69208- 93		131 - 66	2	
	25-69208- 95		131 - 86	1	
	25-69208- 97		132 - 65	2	
	25-69208- 99		132 - 55	1	
	25-69208-1009			2	
	25-69208-101		132 - 42	2	
	25-69208-1011			2	
	25-69208-1013			2	
	25-69208-1015			2	
	25-69208-1017			2	
	25-69208-1019			1	
	25-69208-1021			1	
	25-69208-1023			1	
	25-69208-1025			1	
	25-69208-1027			2	
	25-69208-1029			1	
	25-69208-103		132 - 47	3	
	25-69208-1031			1	
	25-69208-1033			1	
	25-69208-1037			2	
	25-69208-1039			1	
	25-69208-1041			2	
	25-69208-1043			2	
	25-69208-1045			2	
	25-69208-1047			2	
	25-69208-1049			2	
	25-69208-105		135 - 28	4	
	25-69208-1051			2	
	25-69208-1053			2	
	25-69208-1055			1	
	25-69208-1057			2	
	25-69208-1059			2	
	25-69208-1061			1	
	25-69208-1063			1	
	25-69208-1065			1	
	25-69208-1069			2	
	25-69208-107		132 - 45	4	
	25-69208-1071			2	
	25-69208-1073			1	
	25-69208-1075			1	
	25-69208-1077			2	
	25-69208-1079			2	
	25-69208-1081			2	
	25-69208-1085			2	
	25-69208-1087			1	
	25-69208-1089			1	
	25-69208-109		135 - 29	2	
	25-69208-1091			1	
	25-69208-1093			2	
	25-69208-1095			1	
	25-69208-1097			2	
	25-69208-1099			1	
	25-69208-1101			2	
	25-69208-1103			1	
	25-69208-1105			2	
	25-69208-1107			2	
	25-69208-1109			2	
	25-69208-111		132 - 46	2	
	25-69208-1111			2	
	25-69208-1113			2	
	25-69208-1115			2	
	25-69208-1117			2	
	25-69208-1119			1	
	25-69208-113		132 - 26	2	
	25-69208-115		132 - 44	2	
	25-69208-117		131 - 40	2	
	25-69208-119		130 - 8	1	
	25-69210- 1		131 - 11	2	
	25-69210- 3			4	
	25-69210- 5		131 - 55	2	
	25-69211- 1			1	
	25-69211- 3			1	
	25-69214- 3			2	
	25-69215- 1	X1		1	
	25-69215- 3	X1		2	
	25-69215- 3C	X1		1	
	25-69215- 5			1	
	25-69215- 3C			2	
	25-69215-301		134 - 60	2	
	25-69216- 3	X2	134 - 17	3	H-32
			134 - 41		
	25-69216- 3C	X1		4	
	25-69216- 5			2	
	25-69217- 3	X1		8	B-79
R83MDA-	25-69218- 1	P1	134 - 19	4	H-33
			134 - 43		
	25-69218- 3	X1		4	
	25-69218- 5	X1		4	
	25-69218- 7	X1		4	
	25-69218- 9	X1		4	
	25-69219- 3	X1		4	B-80
	25-69220- 3	M1	134 - 29	4	B-81
			134 - 53		
	25-69222- 3	M1	134 - 21	12	
			134 - 45		
	25-69224- 3	M1	134 - 33	4	
			134 - 57		
R83MDA-	25-69225- 3	P	134 - 34	4	B-83
			134 - 58		
	25-69225-1603			1	
	25-69226- 1	M1	130 - 60	4	C-136
	25-69226- 3	M1		4	
	25-69226- 5	M1		4	
	25-69226- 7	M1		4	
	25-69226- 9	M1		4	
	25-69226- 11	M1		4	
	25-69226- 13	M1		4	
	25-69226- 15	M1		8	
R82MDA-	25-69228- 1	P1	27 - 5	34	C-137
			27 - 17		
			28 - 52		
	25-69228- 3	X1		34	
	25-69229- 3	X1		36	A-79
	25-69235- 1	X1		1	H-34
	25-69235- 3	X1		1	
	25-69235- 3C	X1		2	
	25-69235- 5			2	
	25-69235-301		134 - 36	2	
R83MDA-	25-69237- 1	P1	172 - 11	4	B-88
	25-69237- 5	X1		4	
R83MDA-	25-69238- 3	P1	172 - 17	4	C-140
	25-69239- 3			2	
	25-69239- 5	P1	172 - 15	2	C-141
R83MDA-	25-69240- 1	P1	172 - 5	4	C-142
	25-69240- 3	X1		4	
	25-69241- 5			1	
	25-69241- 9			1	
R83MDA-	25-69242- 3	P	172 - 8	4	
R83MDA-	25-69243- 3	P	172 - 9	4	
	25-69244- 3	X1	134 - 13	4	H-35
	25-69244- 3C	X1		2	
	25-69245- 3	X2	134 - 2	4	D-162
	25-69245- 3C	X1		4	
	25-69246- 3	X1		4	
	25-69247- 3	X1		4	C-144
R83MDA-	25-69248- 1	P1	134 - 6	4	
	25-69249- 3	M1	134 - 3	4	
	25-69250- 3	M1	134 - 5	4	
	25-69251- 3	M1	134 - 4	4	B-93
R82MDA-	25-69252- 3	P1	27 - 12	2	C-146
	25-69253- 1	A	135 - 20	2	XA-76
	25-69253- 3	M1		2	
	25-69254-301		130 - 57	4	D-163
			131 - 88		
			134 -		
	25-69255- 51	M1	158 - 20	1	
	25-69255- 55	M1	158 - 1	1	
	25-69255- 59	M1	158 - 21	1	D-164
	25-69255- 73	M1	158 - 28	1	
	25-69255- 77	M1	158 - 62	1	
	25-69255- 79	M1	158 - 30	1	
	25-69255- 83	M1	158 - 29	1	
	25-69255- 87	M1	158 - 41	1	
	25-69255- 89	M1	158 - 40	1	
	25-69255- 91	M1	158 - 44	1	
	25-69255- 93	M1	158 - 45	1	
	25-69255- 95	M1	158 - 55	1	
	25-69255- 97	M1	158 - 53	1	
	25-69255-101	M1	158 - 37	1	
	25-69255-1051	M1		1	
	25-69255-1055	M1		1	
	25-69255-1073	M1		1	
	25-69255-1077	M1		1	
	25-69255-1079	M1		1	
	25-69255-1083	M1		1	
	25-69255-1087	M1		1	
	25-69255-1089	M1		1	
	25-69255-1091	M1		1	
	25-69255-1093	M1		1	
	25-69255-1095	M1		1	
	25-69255-1097	M1		1	
	25-69255-1101	M1		1	
	25-69255-1115	M1		1	
	25-69255-115	M1	158 - 61	1	
	25-69255-603			1	
	25-69256- 1		135 - 48	4	
	25-69256- 3			4	
	25-69257- 1	*	60 - 30	1	
	25-69258- 1	*	60 - 20	1	

STOCK	PART NUMBER	SOURCE CODE	FIGURE & INDEX NO.	QTY. PER A/C	MICROFILM INDEX
	25-69258- 3	*	60 - 22	1	
	25-69259- 1			1	
	25-69259- 3			1	
R82MDA-	25-69260- 3	P	135 - 56	4	
			158 - 75		
R82MDA-	25-69261- 3	P	135 - 42	2	
	25-69262- 1	M1	132 -	4	
	25-69262- 3	M1		4	
	25-69262- 5		131 -	4	
	25-69262- 7			4	
R82MDA-	25-69263- 3	P1	28 - 11	22	
			28 - 13		
R82MDA-	25-69264- 3	P1	28 - 10	4	B-95
R82MDA-	25-69265- 3	P1	28 - 12	8	B-96
			28 - 14		
R82MDA-	25-69266- 1	P1	27 - 18	2	
	25-69266- 3	X1		2	
	25-69267-301		27 - 1	2	
	25-69268- 3		27 - 13	2	
R83MDA-	25-69269- 3	P1	144 - 11	1	
	25-69270- 1	X1	144 - 23	1	
	25-69270- 3	X1		1	
R83MDA-	25-69271- 1	P1	144 - 16	1	
	25-69271- 5			2	
	25-69271- 7			2	
R83MDA-	25-69272- 1	P1	144 - 5	1	
	25-69272- 3	X1		1	
	25-69272- 3F	X1		1	
R83MDA-	25-69274- 3	P1	144 - 22	1	
	25-69275- 5	M1	144 - 19	1	
	25-69276- 3	M1	144 - 18	1	
	25-69277- 3F	X1		1	D-170
	25-69278- 1			1	
	25-69278- 3			1	
	25-69278- 5			1	
	25-69278- 13			1	
	25-69278- 15			1	
	25-69278- 17			1	
	25-69278- 19			1	
	25-69278- 21			1	
	25-69278- 23			1	
	25-69278- 25			1	
	25-69278- 27			1	
	25-69278- 29			1	
	25-69278- 31			1	
	25-69278- 33			1	
	25-69278- 35			1	
	25-69278- 37			1	
	25-69278- 39			1	
	25-69278- 41			1	
	25-69278- 43			1	
	25-69278- 45			1	
	25-69278- 47			1	
	25-69278- 49			1	
	25-69278- 51			1	
	25-69278- 53			1	
	25-69278- 55			1	
	25-69278- 57			1	
	25-69278- 59			1	
	25-69278- 61			1	
	25-69278- 63			1	
	25-69278- 65			1	
	25-69278- 67			1	
	25-69278- 69			1	
	25-69278- 71		129 - 36	1	
	25-69278- 73			1	
	25-69278- 75			1	
	25-69278- 77			1	
	25-69278- 79			1	
	25-69278- 81			1	
	25-69278-1003			1	
	25-69278-1005			1	
	25-69278-1013			1	
	25-69278-1015			1	
	25-69278-1017			1	
	25-69278-1019			1	
	25-69278-1021			1	
	25-69278-1023			1	
	25-69278-1025			1	
	25-69278-1027			1	
	25-69278-1029			1	
	25-69278-1031			1	
	25-69278-1033			1	
	25-69278-1035			1	
	25-69278-1037			1	
	25-69278-1039			1	
	25-69278-1041			1	
	25-69278-1043			1	
	25-69278-1045			1	
	25-69278-1047			1	
	25-69278-1049			1	
	25-69278-1051			1	
	25-69278-1053			1	
	25-69278-1055			1	
	25-69278-1057			1	
	25-69278-1059			1	
	25-69278-1061			1	
	25-69278-1063			1	
	25-69278-1065			1	
	25-69278-1067			1	
	25-69278-1069			1	
	25-69278-1071			1	
	25-69278-1073			1	
	25-69278-1075			1	
	25-69278-1077			1	
	25-69278-1079			1	
	25-69278-1081			1	
	25-69278-1901			1	
R82MDA-	25-69279- 1	P1	152 - 28	2	D-171
	25-69279- 3	X1		2	
	25-69279- 5	M1	152 - 29	4	
	25-69279- 7		152 - 30	4	
	25-69279-301		152 - 28	2	
	25-69280- 5	P1	152 - 23	2	XA-120
	25-69280- 7	X1		3	
R82MDA-	25-69281- 3	P1	152 - 20	2	C-152
	25-69282- 1	M1	152 - 1	1	
	25-69282- 3	M1		1	
	25-69283- 3	M1	152 - 11	2	B-101
R82MDA-	25-69284- 3	P1	152 - 13	2	
	25-69285- 3	M1	152 - 7	2	
R82MDA-	25-69286- 3	P1	152 - 6	2	B-104
R82MDA-	25-69287- 3	P1	152 - 12	2	
	25-69290- 3	M1	152 - 5	2	
	25-69310- 1	M1	131 - 90	2	C-159
	25-69310- 3	M1		2	
	25-69310- 5	M1		2	
	25-69310- 7	M1		4	
	25-69310- 9	M1		2	
	25-69310- 11	M1		2	
	25-69310- 13	M1		2	
	25-69310- 15	M1		2	
	25-69313- 1	M1	131 - 91	2	C-161
	25-69313- 3	M1		4	
	25-69313- 5	M1		4	
	25-69313- 7	M1		4	
	25-69314- 1	M1	131 - 92	4	C-162
			132 - 80		
	25-69314- 3	M1		8	
	25-69314- 5	M1		3	
	25-69314- 7	X1		3	
	25-69314- 9	X1		3	
	25-69314- 11	X1		3	
	25-69314- 13	X1		3	
	25-69314- 15	X1		3	
	25-69314- 17	X1		3	
	25-69314- 19	X1		3	
	25-69315- 3	M1		2	D-177
	25-69316- 3	M1		2	D-178
	25-69317- 1	M1	131 -	2	
	25-69318- 1	M1	131 -	2	
R82MDA-	25-69319- 1	P1	150 - 2	1	XA-121
			152 -		
	25-69319- 7		146 -120	1	
			152 -		
R83MDA-	25-69320- 1	P	152 - 4	1	C-165
	25-69320- 3	M1		1	
R82MDA-	25-69321- 3	P	152 - 25	2	B-113
	25-69322- 3	M1	152 - 26	2	
	25-69323- 3		151 - 6	1	
	25-69324- 3		151 - 8	2	
	25-69325- 3		151 - 18	1	
	25-69326- 1		151 - 27	1	
	25-69326- 3			1	
	25-69326- 5			1	
	25-69326- 7			1	
	25-69327- 3		129 - 34	1	
	25-69327- 5		129 - 36	1	
	25-69327- 7		131 - 25	2	
	25-69327- 9		131 - 93	2	
			132 - 81		
	25-69327- 11		132 - 7	2	
	25-69327- 13		132 - 13	2	
	25-69327- 15		132 - 3	2	
	25-69327- 17		132 - 6	2	
	25-69327- 19		132 - 10	2	
	25-69327- 21		132 - 15	2	
	25-69327- 27		131 - 76	2	
	25-69327- 29		132 - 39	2	
	25-69327- 31		132 - 41	2	
	25-69327- 33		135 - 52	1	
	25-69327- 35		135 - 53	2	
	25-69327- 37		135 - 84	1	
	25-69327- 39		130 - 39	2	
	25-69327- 41		130 - 38	2	
	25-69327- 43		130 - 47	2	
	25-69327- 45		130 - 46	2	
	25-69327- 47		130 - 49	2	
	25-69327- 49			2	
	25-69327- 53			2	
	25-69327- 55		129 - 31	1	
	25-69327- 57			1	

STOCK	PART NUMBER	SOURCE CODE	FIGURE & INDEX NO.	QTY. PER A/C	MICROFILM INDEX
	25-69327- 59			1	
	25-69327- 61			1	
	25-69327- 63			1	
	25-69327- 87			1	
	25-69327- 89			1	
	25-69327- 91			1	
	25-69327- 93			1	
	25-69327-1003			1	
	25-69327-1005			2	
	25-69327-1007			3	
	25-69327-1009			2	
	25-69327-1011			2	
	25-69327-1013			2	
	25-69327-1015			1	
	25-69327-1017			1	
	25-69327-1019			2	
	25-69327-1021			2	
	25-69327-1027			2	
	25-69327-1029			2	
	25-69327-1031			2	
	25-69327-1033			1	
	25-69327-1035			2	
	25-69327-1037			1	
	25-69327-1039			2	
	25-69327-1041			2	
	25-69327-1043			2	
	25-69327-1045			2	
	25-69327-1047			2	
	25-69327-1049			2	
	25-69327-1053			2	
	25-69327-1055			1	
	25-69327-1057			1	
	25-69327-1059			1	
	25-69327-1061			1	
	25-69327-1063			1	
	25-69327-1087			1	
	25-69327-1089			1	
	25-69327-1091			1	
	25-69327-1093			1	
	25-69328- 3		29 - 7	8	
R82MDA-	25-69329- 3	P1	129 - 69	1	
	25-69330- 1	M1	28 - 78	4	B-115
	25-69330- 3	M1		8	
	25-69330- 5	M1		8	
	25-69330- 7	M1		8	
	25-69332- 3	X1		16	A-81
R82MDA-	25-69334- 1	P1	11 - 11	16	B-116
	25-69334- 3	X1		16	
R82MDA-	25-69336- 5	P1	11 - 13	16	B-118
R82MDA-	25-69337- 3	P1	11 - 14	16	B-119
	25-69338-301		11 - 7	16	C-166
	25-69339- 1	M1	28 - 18	4	
	25-69339- 3	M1		8	
	25-69339- 5	M1		8	
	25-69339- 7	M1		8	
	25-69340- 3		28 - 48	8	D-181
	25-69341- 1	A	28 - 58	8	B-121
	25-69343- 3			1	
R82MDA-	25-69344- 3	P	110 - 18	4	B-123
	25-69345- 3	*	63 - 71	1	XA-77
			135 - 70		
R83MDA-	25-69346- 1	P1	110 -	2	D-182
R83MDA-	25-69346- 3	P1	110 - 25	2	
	25-69347- 1	X1	110 - 32	4	C-168
	25-69347- 3	X1		4	
	25-69348- 3	X1	110 - 44	4	C-169
R83MDA-	25-69349- 3	P	110 - 36	4	
R83MDA-	25-69350- 1	P	110 - 27	4	C-171
	25-69350- 3	M1		4	
	25-69351- 3	M1	110 - 35	4	B-124
	25-69352- 3	M1	134 - 22	8	B-125
			134 - 46		
	25-69353- 3	M1	134 - 25	4	B-126
			134 - 49		
	25-69354- 3	M1	134 - 27	4	
			134 - 51		
	25-69355- 3	M1	134 - 26	4	
			134 - 50		
R82MDA-	25-69356- 3	P	135 -111	2	
R82MDA-	25-69357- 3	P1	28 - 57	16	XA-78
	25-69358- 1	A	135 - 21	2	
	25-69358- 5	M1		2	XA-79
	25-69359- 3	M1	130 - 2	2	D-183
	25-69359- 5	M1	130 - 29	2	
	25-69359- 15	M1	130 - 53	2	
	25-69359- 17	M1	130 - 34	2	
	25-69359- 21	M1	130 - 35	2	
	25-69359- 29	M1	131 - 56	2	
	25-69359- 53	M1	131 - 3	2	
	25-69359- 55	M1	131 - 17	2	
	25-69359- 61	M1	131 - 1	2	
	25-69359- 69	M1	131 - 5	2	
	25-69359- 71	M1	131 - 4	2	
	25-69359- 73	M1	135 - 27	2	
	25-69359- 79	M1	130 - 6	1	
	25-69359- 81	M1	130 - 5	1	

STOCK	PART NUMBER	SOURCE CODE	FIGURE & INDEX NO.	QTY. PER A/C	MICROFILM INDEX
	25-69359- 83	M1	130 - 30	1	
	25-69359- 85	M1	130 - 7	1	
	25-69359- 89	M1	130 - 32	2	
	25-69359- 91	M1	132 - 57	1	
	25-69359- 93	M1	132 - 50	2	
	25-69359- 95	M1	132 - 51	1	
	25-69359- 97	M1	131 - 35	2	
	25-69359-1003	M1		2	
	25-69359-1005	M1		2	
	25-69359-101	M1	131 - 32	2	
	25-69359-1015	M1		2	
	25-69359-1017	M1		2	
	25-69359-1021	M1		2	
	25-69359-1029	M1		2	
	25-69359-103	M1	132 - 54	2	
	25-69359-1053	M1		2	
	25-69359-1055	M1		2	
	25-69359-1061			2	
	25-69359-1069	M1		2	
	25-69359-1071	M1		2	
	25-69359-1073	M1		2	
	25-69359-1079	M1		1	
	25-69359-1081	M1		1	
	25-69359-1083	M1		1	
	25-69359-1085	M1		1	
	25-69359-1089	M1		2	
	25-69359-1091	M1		1	
	25-69359-1093	M1		2	
	25-69359-1095	M1		1	
	25-69359-1097	M1		2	
	25-69359-1101	M1		2	
	25-69359-1103	M1		2	
	25-69359-111	M1	132 - 35	1	
	25-69359-1111	M1		1	
	25-69359-1113	M1		1	
	25-69359-1115	M1		2	
	25-69359-113	M1	132 - 33	1	
	25-69359-115	M1	132 - 32	2	
	25-69360- 3	M1	131 - 27	2	D-184
	25-69360- 7	M1	132 - 75	2	
	25-69360- 9	M1	132 - 30	2	
	25-69360- 17	M1	132 - 72	1	
	25-69360- 35	M1	135 - 31	2	
	25-69360- 45	M1	132 - 31	2	
	25-69360- 49	M1	132 - 37	2	
	25-69360- 51	M1	132 - 38	2	
	25-69360- 53	M1	132 - 58	1	
	25-69360- 57	M1	132 - 74	2	
	25-69360- 59	M1	132 - 61	1	
	25-69360- 69	M1	132 - 28	1	
	25-69360- 71	M1	132 - 60	1	
	25-69360- 73	M1	132 - 59	1	
	25-69360- 75	M1	132 - 52	2	
	25-69360- 77	M1	132 - 53	2	
	25-69360- 81	M1	130 - 3	1	
	25-69360- 83	M1	132 - 12	2	
	25-69360- 85	M1	132 - 8	2	
	25-69360- 87	M1	131 - 81	2	
	25-69360- 89	M1	131 - 84	2	
	25-69360- 91	M1	131 - 59	2	
	25-69360- 93	M1	132 - 79	2	
	25-69360- 95	M1	131 - 74	2	
	25-69360- 97	M1	131 - 33	2	
	25-69360- 99	M1	131 - 36	2	
	25-69360-1003	M1		2	
	25-69360-1007	M1		2	
	25-69360-1009	M1		2	
	25-69360-101	M1	131 - 37	2	
	25-69360-1017	M1		1	
	25-69360-103	M1	131 - 34	2	
	25-69360-1035	M1		2	
	25-69360-1045	M1		2	
	25-69360-1049	M1		2	
	25-69360-105	M1	131 - 14	2	
	25-69360-1051	M1		2	
	25-69360-1053	M1		1	
	25-69360-1057	M1		2	
	25-69360-1059	M1		1	
	25-69360-1069	M1		1	
	25-69360-1071	M1		1	
	25-69360-1073	M1		1	
	25-69360-1075	M1		2	
	25-69360-1077	M1		2	
	25-69360-1081	M1		1	
	25-69360-1083	M1		2	
	25-69360-1085	M1		2	
	25-69360-1087	M1		2	
	25-69360-1089	M1		2	
	25-69360-109	M1	131 - 82	1	
	25-69360-1091	M1		2	
	25-69360-1093	M1		2	
	25-69360-1095	M1		2	
	25-69360-1097	M1		2	
	25-69360-1099	M1		2	
	25-69360-1101	M1		2	
	25-69360-1103	M1		2	

STOCK	PART NUMBER	SOURCE CODE	FIGURE & INDEX NO.	QTY. PER A/C	MICROFILM INDEX
	25-69360-1105	M1		2	
	25-69360-1109	M1		1	
	25-69360-111	M1	131 - 79	1	
	25-69360-1111	M1		1	
	25-69360-1115	M1		2	
	25-69360-1117	M1		2	
	25-69360-1119	M1		1	
	25-69360-115	M1	131 - 77	2	
	25-69360-117	M1	131 - 57	2	
	25-69360-119	M1	131 - 75	1	
	25-69361- 3	M1	133 - 2	2	XA-122
	25-69361- 5	M1	133 - 5	2	
	25-69361- 7	M1	133 - 3	2	
	25-69361- 9	M1	133 - 4	2	
	25-69361- 11	M1	133 - 7	2	
	25-69361- 15	M1	133 - 8	2	
	25-69361- 23	M1	135 - 60	2	
	25-69361- 29	M1	131 - 2	2	
	25-69361- 35	M1	131 - 48	2	
	25-69361- 37	M1	131 - 13	2	
	25-69361- 39	M1	131 - 49	2	
	25-69361- 41	M1	131 - 70	2	
	25-69361- 43	M1	131 - 39	2	
	25-69361- 45	M1	131 - 46	2	
	25-69361- 49			1	
	25-69361- 55			1	
	25-69361- 69			1	
	25-69361- 73	M1	131 - 60	1	
	25-69361- 77	M1		1	
	25-69361- 81	M1		1	
	25-69361- 83	M1	128 - 15	2	
			129 - 2		
	25-69361- 85	M1	129 - 67	1	
	25-69361- 95	M1		1	
	25-69361- 97	M1	131 - 28	2	
	25-69361- 99	M1	135 - 32	1	
	25-69361-1003	M1		2	
	25-69361-1005	M1		2	
	25-69361-1007	M1		2	
	25-69361-1009	M1		2	
	25-69361-101	M1	131 - 58	1	
	25-69361-1011	M1		2	
	25-69361-1015	M1		2	
	25-69361-1023	M1		2	
	25-69361-1029	M1		2	
	25-69361-103	M1	131 - 73	1	
	25-69361-1035	M1		2	
	25-69361-1037	M1		2	
	25-69361-1039	M1		2	
	25-69361-1041	M1		2	
	25-69361-1043	M1		2	
	25-69361-1045	M1		2	
	25-69361-1049	M1		1	
	25-69361-105	M1	131 - 83	1	
	25-69361-1055	M1		1	
	25-69361-1069	M1		1	
	25-69361-107	M1	131 - 80	1	
	25-69361-1073	M1		1	
	25-69361-1077	M1		1	
	25-69361-1081	M1		1	
	25-69361-1083	M1		2	
	25-69361-1085	M1		1	
	25-69361-109	M1	130 - 54	2	
	25-69361-1095	M1		1	
	25-69361-1097	M1		2	
	25-69361-1099	M1		1	
	25-69361-1101	M1		1	
	25-69361-1103	M1		1	
	25-69361-1105	M1		1	
	25-69361-1107	M1		1	
	25-69361-1109	M1		2	
	25-69361-111	M1		1	
	25-69361-1111	M1		1	
	25-69361-1117	M1		2	
	25-69361-117	M1	131 - 85	2	
	25-69361-901		128 - 28	1	
	25-69362- 15	M1		1	D-186
	25-69362- 17	M1	131 - 72	2	
	25-69362- 19	M1	131 - 68	1	
	25-69362- 23	M1	132 - 71	1	
	25-69362- 29	M1	132 - 56	2	
	25-69362- 31	M1	131 - 69	2	
	25-69362- 33	M1	135 - 47	2	
	25-69362- 45	M1	130 - 21	2	
	25-69362- 49	M1	130 - 26	2	
	25-69362- 51	M1	130 - 18	2	
	25-69362- 55	M1	135 - 30	2	
	25-69362- 57	M1	132 - 73	2	
	25-69362- 59	M1	131 - 15	2	
	25-69362- 61		135 - 33	2	
	25-69362- 65	M1		1	
	25-69362- 67	M1	135 - 61	2	
	25-69362- 69	M1	131 - 30	2	
	25-69362- 71	M1	129 - 64	1	
	25-69362- 75	71	130 - 10	2	
	25-69362- 77	M1	130 - 11	2	
	25-69362- 81	M1	130 - 14	2	
	25-69362- 83	M1	130 - 13	2	
	25-69362- 87	M1	135 - 68	2	
	25-69362- 89	M1	135 - 69	2	
	25-69362- 91	M1	135 - 77	1	
	25-69362- 93	M1	135 - 76	1	
	25-69362- 95	M1	135 - 74	2	
	25-69362- 97	M1	135 - 71	1	
	25-69362- 99	M1	135 - 72	1	
	25-69362-101	M1	131 - 31	3	
	25-69362-1015	M1		1	
	25-69362-1017	M1		2	
	25-69362-1019	M1		1	
	25-69362-1023	M1		1	
	25-69362-1029	M1		2	
	25-69362-1031	M1		2	
	25-69362-1033	M1		2	
	25-69362-1045	M1		2	
	25-69362-1049	M1		2	
	25-69362-105	M1	131 - 29	2	
	25-69362-1051			2	
	25-69362-1055			2	
	25-69362-1057			2	
	25-69362-1059			2	
	25-69362-1061			2	
	25-69362-1065			1	
	25-69362-1067			2	
	25-69362-1069			2	
	25-69362-107	M1	131 - 78	2	
	25-69362-1071	M1		1	
	25-69362-1075	M1		2	
	25-69362-1077	M1		2	
	25-69362-1081	M1		2	
	25-69362-1083	M1		2	
	25-69362-1087	M1		2	
	25-69362-1089	M1		2	
	25-69362-1091	M1		1	
	25-69362-1093	M1		1	
	25-69362-1095	M1		2	
	25-69362-1097	M1		1	
	25-69362-1099	M1		1	
	25-69362-1101	M1		3	
	25-69362-1105	M1		2	
	25-69362-1107	M1		2	
	25-69362-1119	M1		2	
	25-69362-119	M1	135 - 9	2	
	25-69363- 1	M1	131 - 19	1	XA-34
	25-69363- 3		191 - 62	2	
	25-69363- 5			1	
	25-69363- 7			2	
	25-69364- 3	M1	134 - 40	2	
	25-69365- 1			1	
	25-69366- 1			1	
	25-69366-1-3			1	
	25-69366-1-3F			1	
	25-69368- 1			1	
	25-69368- 3			1	
	25-69369- 3			1	
	25-69381- 1		146 -129	1	
			151 -		
	25-69382- 1		151 - 7	1	
	25-69382- 3			1	
	25-69383- 3		151 - 34	3	
	25-69384- 3		151 - 28	2	
	25-69385- 3		151 - 14	1	
	25-69386- 1		151 - 1	1	
	25-69386- 3			1	
	25-69387- 3		151 - 17	1	
	25-69388- 3	M	11 - 19	1	D-187
	25-69388- 5	M	11 - 19	1	
	25-69388- 7	M	11 - 21	1	
	25-69388- 9	M	11 - 21	1	
	25-69388- 11	M	11 - 23	1	
	25-69388- 13	M	11 - 23	1	
	25-69388- 15	M	11 - 24	1	
	25-69388- 17	M	11 - 24	1	
	25-69388- 23	M	11 - 38	1	
	25-69388- 25	M	11 - 38	1	
	25-69388- 27	M1	11 - 36	1	
	25-69388- 29	M1	11 - 36	1	
	25-69388- 31	M1	11 - 34	1	
	25-69388- 33	M1	11 - 34	1	
	25-69388- 35	M1	11 - 33	1	
	25-69388- 37	M1	11 - 33	1	
	25-69388- 39	M1	11 - 31	1	
	25-69388- 41	M1	11 - 31	1	
	25-69388- 43	M1	11 - 29	1	
	25-69388- 45	M1	11 - 29	1	
	25-69388- 47	M1	11 - 26	1	
	25-69388- 49	M1	11 - 26	1	
	25-69388- 51	M1	11 - 43	1	
	25-69388- 53	M1	11 - 43	1	
	25-69388- 55	M1	11 - 45	1	
	25-69388- 57	M1	11 - 45	1	
	25-69388- 59	M1	11 - 46	1	
	25-69388- 61	M1	11 - 46	1	

STOCK	PART NUMBER	SOURCE CODE	FIGURE & INDEX NO.	QTY. PER A/C	MICROFILM INDEX
	25-69388- 63		11 - 40	1	
	25-69388- 65		11 - 40	1	
	25-69388- 67		11 - 21	1	
	25-69388- 69		11 - 21	1	
	25-69388- 71		11 - 33	1	
	25-69388- 73		11 - 33	1	
	25-69388-1003	M		1	
	25-69388-1005	M		1	
	25-69388-1007	M		1	
	25-69388-1009	M		1	
	25-69388-1011	M		1	
	25-69388-1013	M		1	
	25-69388-1015	M		1	
	25-69388-1017	M		1	
	25-69388-1023	M		1	
	25-69388-1025	M		1	
	25-69388-1027	M1		1	
	25-69388-1029	M1		1	
	25-69388-1031	M1		1	
	25-69388-1033	M1		1	
	25-69388-1035	M1		1	
	25-69388-1037	M1		1	
	25-69388-1039	M1		1	
	25-69388-1041	M1		1	
	25-69388-1043	M1		1	
	25-69388-1045	M1		1	
	25-69388-1047	M1		1	
	25-69388-1049	M1		1	
	25-69388-1051	M1		1	
	25-69388-1053	M1		1	
	25-69388-1055	M1		1	
	25-69388-1057	M1		1	
	25-69388-1059	M1		1	
	25-69388-1061	M1		1	
	25-69388-1063			1	
	25-69388-1065			1	
	25-69388-1067			1	
	25-69388-1069			1	
	25-69388-1071			1	
	25-69388-1073			1	
	25-69389- 1		151 -	1	
	25-69390- 3		151 - 26	1	
	25-69391- 3		151 - 21	1	
	25-69392- 3		151 - 22	1	
	25-69393- 3		151 - 25	1	
	25-69395- 3		151 - 33	1	
	25-69396- 1			1	
	25-69400- 1			1	
	25-69400- 2			1	
	25-69401- 1			1	
	25-69401- 2			1	
	25-69401- 3			1	
	25-69401- 4			1	
	25-69402- 1			1	
	25-69402- 2			1	
	25-69403- 1			2	
	25-69403- 3			2	
	25-69404- 3			2	
	25-69405- 3			2	
	25-69406- 3			1	
	25-69406- 4			1	
	25-69408- 3			1	
	25-69408- 5			1	
	25-69408- 7			1	
	25-69408- 9			1	
	25-69408- 11			1	
	25-69408- 13			2	
	25-69408- 15			1	
	25-69408- 17			1	
	25-69408- 19			1	
	25-69408- 21			1	
	25-69408- 23			1	
	25-69408- 25			1	
	25-69408- 27			1	
	25-69408- 29			1	
	25-69408- 31			1	
	25-69408- 33			1	
	25-69408- 35			1	
	25-69408- 37			1	
	25-69408- 39			1	
	25-69408- 41			1	
	25-69408- 43			1	
	25-69408- 45			1	
	25-69408- 47			1	
	25-69408- 49			1	
	25-69408- 51			1	
	25-69408- 53			1	
	25-69408- 55			1	
	25-69408- 57			1	
	25-69408- 63			1	
	25-69408- 65			1	
	25-69408- 67			1	
	25-69408- 69			1	
	25-69408- 71			1	
	25-69408- 73			1	
	25-69408- 75			1	

STOCK	PART NUMBER	SOURCE CODE	FIGURE & INDEX NO.	QTY. PER A/C	MICROFILM INDEX
	25-69408- 77			1	
	25-69408- 79			1	
	25-69408- 81			1	
	25-69408- 83			1	
	25-69408- 85			1	
	25-69408- 87			1	
	25-69408- 89			1	
	25-69408- 91			1	
	25-69408- 93			1	
	25-69408- 95			1	
	25-69408- 97			1	
	25-69408- 99			1	
	25-69408-1003			1	
	25-69408-1005			1	
	25-69408-1007			1	
	25-69408-1009			1	
	25-69408-101			1	
	25-69408-1011			1	
	25-69408-1013			1	
	25-69408-1015			1	
	25-69408-1017			1	
	25-69408-1019			1	
	25-69408-1021			1	
	25-69408-1023			1	
	25-69408-1025			1	
	25-69408-1027			1	
	25-69408-1029			1	
	25-69408-103			1	
	25-69408-1031			1	
	25-69408-1033			1	
	25-69408-1035			1	
	25-69408-1037			1	
	25-69408-1039			1	
	25-69408-1041			1	
	25-69408-1043			1	
	25-69408-1045			1	
	25-69408-1047			1	
	25-69408-1049			1	
	25-69408-105			1	
	25-69408-1051			1	
	25-69408-1053			1	
	25-69408-1055			1	
	25-69408-1057			1	
	25-69408-1063			1	
	25-69408-1065			1	
	25-69408-1067			1	
	25-69408-1069			1	
	25-69408-107			1	
	25-69408-1071			1	
	25-69408-1073			1	
	25-69408-1075			1	
	25-69408-1077			1	
	25-69408-1079			1	
	25-69408-1081			1	
	25-69408-1083			1	
	25-69408-1085			1	
	25-69408-1087			1	
	25-69408-1089			1	
	25-69408-109			1	
	25-69408-1091			1	
	25-69408-1093			1	
	25-69408-1095			1	
	25-69408-1097			1	
	25-69408-1099			1	
	25-69408-1101			1	
	25-69408-1103			1	
	25-69408-1105			1	
	25-69408-1107			1	
	25-69408-1109			1	
	25-69408-111			1	
	25-69408-1111			1	
	25-69408-1113			1	
	25-69408-1115			1	
	25-69408-1117			1	
	25-69408-1119			1	
	25-69408-1121			1	
	25-69408-113			1	
	25-69408-115			1	
	25-69408-117			1	
	25-69408-119			1	
	25-69408-121			1	
	25-69409- 3			2	
	25-69410- 3			1	
	25-69410- 5			1	
	25-69410- 7			1	
	25-69410- 9			1	
	25-69410- 11			1	
	25-69410- 13			1	
	25-69410- 15			1	
	25-69410- 17			1	
	25-69410- 19			1	
	25-69410- 21			1	
	25-69410- 23			1	
	25-69410- 25			1	
	25-69410- 27			1	
	25-69410- 29			1	

STOCK	PART NUMBER	SOURCE CODE	FIGURE & INDEX NO.	QTY. PER A/C	MICROFILM INDEX
	25-69410- 31			1	
	25-69410- 33			1	
	25-69410- 35			1	
	25-69410- 37			1	
	25-69410- 39			1	
	25-69410- 41			1	
	25-69410- 43			1	
	25-69410- 45			1	
	25-69410- 47			1	
	25-69410- 49			1	
	25-69410- 51			1	
	25-69410- 53			1	
	25-69410- 55			1	
	25-69410- 57			1	
	25-69410- 59			1	
	25-69410- 61			1	
	25-69410- 63			1	
	25-69410- 65			1	
	25-69410- 67			1	
	25-69410- 69			1	
	25-69410- 71			1	
	25-69410- 73			1	
	25-69410- 75			1	
	25-69410- 77			1	
	25-69410- 79			1	
	25-69410- 81			1	
	25-69410- 83			1	
	25-69410- 85			1	
	25-69410- 87			1	
	25-69410- 89			1	
	25-69410- 91			1	
	25-69410- 93			1	
	25-69410- 95			1	
	25-69410- 97			1	
	25-69410- 99			1	
	25-69410-1003			1	
	25-69410-1005			1	
	25-69410-1007			1	
	25-69410-1009			1	
	25-69410-101			1	
	25-69410-1011			1	
	25-69410-1013			1	
	25-69410-1015			1	
	25-69410-1017			1	
	25-69410-1019			1	
	25-69410-1021			1	
	25-69410-1023			1	
	25-69410-1025			1	
	25-69410-1027			1	
	25-69410-1029			1	
	25-69410-103			1	
	25-69410-1031			1	
	25-69410-1033			1	
	25-69410-1035			1	
	25-69410-1037			1	
	25-69410-1039			1	
	25-69410-1041			1	
	25-69410-1043			1	
	25-69410-1045			1	
	25-69410-1047			1	
	25-69410-1049			1	
	25-69410-105			1	
	25-69410-1051			1	
	25-69410-1053			1	
	25-69410-1055			1	
	25-69410-1057			1	
	25-69410-1059			1	
	25-69410-1061			1	
	25-69410-1063			1	
	25-69410-1065			1	
	25-69410-1067			1	
	25-69410-1069			1	
	25-69410-107			1	
	25-69410-1071			1	
	25-69410-1073			1	
	25-69410-1075			1	
	25-69410-1077			1	
	25-69410-1079			1	
	25-69410-1081			1	
	25-69410-1083			1	
	25-69410-1085			1	
	25-69410-1087			1	
	25-69410-1089			1	
	25-69410-109			1	
	25-69410-1091			1	
	25-69410-1093			1	
	25-69410-1095			1	
	25-69410-1097			1	
	25-69410-1099			1	
	25-69410-1101			1	
	25-69410-1103			1	
	25-69410-1105			1	
	25-69410-1107			1	
	25-69410-1109			1	
	25-69410-111			1	
	25-69410-1111			1	

STOCK	PART NUMBER	SOURCE CODE	FIGURE & INDEX NO.	QTY. PER A/C	MICROFILM INDEX
	25-69410-1113			1	
	25-69410-1115			1	
	25-69410-1117			1	
	25-69410-1119			1	
	25-69410-1121			1	
	25-69410-113			1	
	25-69410-115			1	
	25-69410-117			1	
	25-69410-119			1	
	25-69410-121			1	
	25-69411- 3			1	
	25-69411- 5			1	
	25-69411- 7			1	
	25-69411- 9			1	
	25-69411- 11			1	
	25-69411- 13			1	
	25-69411- 15			1	
	25-69411- 17			1	
	25-69411- 19			1	
	25-69411- 21			1	
	25-69411- 23			1	
	25-69411- 25			1	
	25-69411- 27			1	
	25-69411- 29			1	
	25-69411- 31			1	
	25-69411- 33			1	
	25-69411- 35			1	
	25-69411- 37			1	
	25-69411- 39			1	
	25-69411- 41			1	
	25-69411- 43			1	
	25-69411- 45			1	
	25-69411- 47			1	
	25-69411- 49			1	
	25-69411- 51			1	
	25-69411- 53			1	
	25-69411- 55			1	
	25-69411- 57			1	
	25-69411- 59			1	
	25-69411- 61			1	
	25-69411- 63			1	
	25-69411- 65			1	
	25-69411- 67			1	
	25-69411- 69			1	
	25-69411-1003			1	
	25-69411-1005			1	
	25-69411-1007			1	
	25-69411-1009			1	
	25-69411-1011			1	
	25-69411-1013			1	
	25-69411-1015			1	
	25-69411-1017			1	
	25-69411-1019			1	
	25-69411-1021			1	
	25-69411-1023			1	
	25-69411-1025			1	
	25-69411-1027			1	
	25-69411-1029			1	
	25-69411-1031			1	
	25-69411-1033			1	
	25-69411-1035			1	
	25-69411-1037			1	
	25-69411-1039			1	
	25-69411-1041			1	
	25-69411-1043			1	
	25-69411-1045			1	
	25-69411-1047			1	
	25-69411-1049			1	
	25-69411-1051			1	
	25-69411-1053			1	
	25-69411-1055			1	
	25-69411-1057			1	
	25-69411-1059			1	
	25-69411-1061			1	
	25-69411-1063			1	
	25-69411-1065			1	
	25-69411-1067			1	
	25-69411-1069			1	
	25-69412- 3			1	
	25-69412- 5			1	
	25-69412- 7			1	
	25-69412- 9			1	
	25-69412- 11			1	
	25-69412- 13			1	
	25-69412- 15			1	
	25-69412- 17			1	
	25-69412- 19			1	
	25-69412- 21			1	
	25-69412- 23			1	
	25-69412- 25			1	
	25-69412- 27			1	
	25-69412- 29			1	
	25-69412- 31			1	
	25-69412- 33			1	
	25-69412- 35			1	
	25-69412- 37			1	

STOCK	PART NUMBER	SOURCE CODE	FIGURE & INDEX NO.	QTY. PER A/C	MICROFILM INDEX
	25-69412- 39			1	
	25-69412- 41			1	
	25-69412- 43			1	
	25-69412- 45			1	
	25-69412- 47			1	
	25-69412- 49			1	
	25-69412- 51			1	
	25-69412- 53			1	
	25-69412- 55			1	
	25-69412- 57			1	
	25-69412- 59			1	
	25-69412- 61			1	
	25-69412- 63			1	
	25-69412- 65			1	
	25-69412- 67			1	
	25-69412- 69			1	
	25-69412- 71			1	
	25-69412- 73			1	
	25-69412- 75			1	
	25-69412- 77			1	
	25-69412- 79			1	
	25-69412- 81			1	
	25-69412- 87			1	
	25-69412- 89			1	
	25-69412- 91			1	
	25-69412- 93			1	
	25-69412-1003			1	
	25-69412-1005			1	
	25-69412-1007			1	
	25-69412-1009			1	
	25-69412-1011			1	
	25-69412-1013			1	
	25-69412-1015			1	
	25-69412-1017			1	
	25-69412-1019			1	
	25-69412-1021			1	
	25-69412-1023			1	
	25-69412-1025			1	
	25-69412-1027			1	
	25-69412-1029			1	
	25-69412-1031			1	
	25-69412-1033			1	
	25-69412-1035			1	
	25-69412-1037			1	
	25-69412-1039			1	
	25-69412-1041			1	
	25-69412-1043			1	
	25-69412-1045			1	
	25-69412-1047			1	
	25-69412-1049			1	
	25-69412-1051			1	
	25-69412-1053			1	
	25-69412-1055			1	
	25-69412-1057			1	
	25-69412-1059			1	
	25-69412-1061			1	
	25-69412-1063			1	
	25-69412-1065			1	
	25-69412-1067			1	
	25-69412-1069			1	
	25-69412-1071			1	
	25-69412-1073			1	
	25-69412-1075			1	
	25-69412-1077			1	
	25-69412-1079			1	
	25-69412-1081			1	
	25-69412-1087			1	
	25-69412-1089			1	
	25-69412-1091			1	
	25-69412-1093			1	
	25-69413- 3			8	
	25-69426- 1			1	
	25-69427- 3		28 -138	1	
	25-69427- 5		28 -138	1	
	25-69427- 7		28 -107	1	
	25-69427- 9		28 -107	1	
	25-69427-1003			1	
	25-69427-1005			1	
	25-69427-1007			1	
	25-69427-1009			1	
	25-69428- 3		27 - 35	1	
	25-69428- 5		27 - 35	1	
	25-69428- 7		27 - 34	1	
	25-69428- 9		27 - 34	1	
	25-69428- 11		27 - 44	1	
	25-69428- 13		27 - 44	1	
	25-69428- 15		27 - 45	1	
	25-69428- 17		27 - 45	1	
	25-69428- 27		28 -161	1	
	25-69428- 29		28 -161	1	
	25-69428- 43		28 -106	1	
	25-69428- 45		28 -106	1	
	25-69428- 47		28 -118	1	
	25-69428- 49		28 -118	1	
	25-69428- 51		28 -102	1	
	25-69428- 53		28 -102	1	
	25-69428- 55		28 -119	1	
	25-69428- 57		28 -119	1	
	25-69428- 59		28 -130	1	
	25-69428- 61		28 -130	1	
	25-69428- 63		28 -125	1	
	25-69428- 65		28 -125	1	
	25-69428- 71		28 -126	1	
	25-69428- 73		28 -126	1	
	25-69428- 75		27 - 55	1	
	25-69428- 77		27 - 55	1	
	25-69428- 83		27 - 33	1	
	25-69428- 85		27 - 33	1	
	25-69428- 87		28 -122	2	
	25-69428- 89		28 -122	2	
	25-69428- 91		28 -123	1	
	25-69428- 93		28 -123	1	
	25-69428- 95		28 - 99	1	
	25-69428- 97		28 - 99	1	
	25-69428- 99		28 -100	1	
	25-69428-1003			1	
	25-69428-1005			1	
	25-69428-1007			1	
	25-69428-1009			1	
	25-69428-101		28 -100	1	
	25-69428-1011			1	
	25-69428-1013			1	
	25-69428-1015			1	
	25-69428-1017			1	
	25-69428-1027			1	
	25-69428-1029			1	
	25-69428-103		28 -101	1	
	25-69428-1043			1	
	25-69428-1045			1	
	25-69428-1047			1	
	25-69428-1049			1	
	25-69428-105		28 -101	1	
	25-69428-1051			1	
	25-69428-1053			1	
	25-69428-1055			1	
	25-69428-1057			1	
	25-69428-1059			1	
	25-69428-1061			1	
	25-69428-1063			1	
	25-69428-1065			1	
	25-69428-107		28 - 91	1	
	25-69428-1071			1	
	25-69428-1073			1	
	25-69428-1075			1	
	25-69428-1077			1	
	25-69428-1083			1	
	25-69428-1085			1	
	25-69428-1087			2	
	25-69428-1089			2	
	25-69428-109		28 - 91	1	
	25-69428-1091			1	
	25-69428-1093			1	
	25-69428-1095			1	
	25-69428-1097			1	
	25-69428-1099			1	
	25-69428-1101			1	
	25-69428-1103			1	
	25-69428-1105			1	
	25-69428-1107			1	
	25-69428-1109			1	
	25-69428-111		28 - 93	1	
	25-69428-1111			1	
	25-69428-1113			1	
	25-69428-1115			1	
	25-69428-1117			1	
	25-69428-1119			1	
	25-69428-1121			1	
	25-69428-113		28 - 93	1	
	25-69428-115		27 - 38	1	
	25-69428-117		27 - 38	1	
	25-69428-119		27 - 41	1	
	25-69428-121		27 - 41	1	
	25-69429- 11	M1	27 - 37	1	XA-123
	25-69429- 13	M1	27 - 37	1	
	25-69429- 15	M1	27 - 36	1	
	25-69429- 17	M1	27 - 36	1	
	25-69429- 19	M1	27 - 35	1	
	25-69429- 21	M1	27 - 35	1	
	25-69429- 23	M1	27 - 34	1	
	25-69429- 25	M1	27 - 34	1	
	25-69429- 43	M1	27 - 42	1	
	25-69429- 45	M1	27 - 42	1	
	25-69429- 47	M1	27 - 43	1	
	25-69429- 49	M1	27 - 43	1	
	25-69429- 51	M1	27 - 44	1	
	25-69429- 53	M1	27 - 44	1	
	25-69429- 55	M1	27 - 45	1	
	25-69429- 57	M1	27 - 45	1	
	25-69429- 59	M1	27 - 48	1	
	25-69429- 61	M1	27 - 48	1	
	25-69429- 91	M1	28 -156	1	
	25-69429- 93	M1	28 -158	1	

STOCK	PART NUMBER	SOURCE CODE	FIGURE & INDEX NO.	QTY. PER A/C	MICROFILM INDEX
	25-69429- 95	M1	28 -158	1	
	25-69429- 97	M1	28 -160	1	
	25-69429- 99	M1	28 -160	1	
	25-69429-101	M1	28 -164	1	
	25-69429-1011	M1		1	
	25-69429-1013	M1		1	
	25-69429-1015	M1		1	
	25-69429-1017	M1		1	
	25-69429-1019	M1		1	
	25-69429-1021	M1		1	
	25-69429-1023	M1		1	
	25-69429-1025	M1		1	
	25-69429-103	M1	28 -164	1	
	25-69429-1043	M1		1	
	25-69429-1045	M1		1	
	25-69429-1047	M1		1	
	25-69429-1049	M1		1	
	25-69429-105	M1	28 - 60	8	
	25-69429-1051	M1		1	
	25-69429-1053	M1		1	
	25-69429-1055	M1		1	
	25-69429-1057	M1		1	
	25-69429-1059	M1		1	
	25-69429-1061	M1		1	
	25-69429-1091	M1		1	
	25-69429-1093	M1		1	
	25-69429-1095	M1		1	
	25-69429-1097	M1		1	
	25-69429-1099	M1		1	
	25-69429-1101	M1		1	
	25-69429-1103	M1		1	
	25-69429-1105	M1		8	
	25-69429-1119			1	
	25-69429-1121			1	
	25-69429-119		27 - 53	1	
	25-69429-121		27 - 53	1	
	25-69430- 3	M1	28 - 5	1	XA-124
	25-69430- 5	M1	28 - 5	1	
	25-69430- 7	M1	28 -136	1	
	25-69430- 9	M1	28 -136	1	
	25-69430- 31	M1	28 - 17	1	
	25-69430- 33	M1	28 - 17	1	
	25-69430- 35	M1	28 - 71	1	
	25-69430- 37	M1	28 - 71	1	
	25-69430- 39	M1	28 - 89	1	
	25-69430- 41	M1	28 - 89	1	
	25-69430- 51	M1	28 - 37	1	
	25-69430- 53	M1	28 - 37	1	
	25-69430- 55	M1	28 - 15	1	
	25-69430- 57	M1	28 - 15	1	
	25-69430- 59	M1	28 - 70	1	
	25-69430- 61	M1	28 - 70	1	
	25-69430- 63	M1	28 - 16	1	
	25-69430- 65	M1	28 - 16	1	
	25-69430- 67	M1	28 -135	1	
	25-69430- 69	M1	28 -135	1	
	25-69430- 75	M1	28 -133	1	
	25-69430- 77	M1	28 -133	1	
	25-69430- 87	M1	28 - 7	1	
	25-69430- 89	M1	28 - 7	1	
	25-69430- 91	M1	28 -152	1	
	25-69430- 93	M1	28 -152	1	
	25-69430- 95	M1	28 - 6	1	
	25-69430- 97	M1	28 - 6	1	
	25-69430- 99	M1	28 -149	1	
	25-69430-1003	M1		1	
	25-69430-1005	M1		1	
	25-69430-1007	M1		1	
	25-69430-1009	M1		1	
	25-69430-101	M1	28 -149	1	
	25-69430-103	M1	28 - 9	1	
	25-69430-1031	M1		1	
	25-69430-1033	M1		1	
	25-69430-1035	M1		1	
	25-69430-1037	M1		1	
	25-69430-1039	M1		1	
	25-69430-1041	M1		1	
	25-69430-105	M1	28 - 9	1	
	25-69430-1051	M1		1	
	25-69430-1053	M1		1	
	25-69430-1055	M1		1	
	25-69430-1057	M1		1	
	25-69430-1059	M1		1	
	25-69430-1061	M1		1	
	25-69430-1063	M1		1	
	25-69430-1065	M1		1	
	25-69430-1067	M1		1	
	25-69430-1069	M1		1	
	25-69430-1075	M1		1	
	25-69430-1077	M1		1	
	25-69430-1087	M1		1	
	25-69430-1089	M1		1	
	25-69430-1091	M1		1	
	25-69430-1093	M1		1	
	25-69430-1095	M1		1	
	25-69430-1097	M1		1	

STOCK	PART NUMBER	SOURCE CODE	FIGURE & INDEX NO.	QTY. PER A/C	MICROFILM INDEX
	25-69430-1099	M1		1	
	25-69430-1101	M1		1	
	25-69430-1103	M1		1	
	25-69430-1105	M1		1	
	25-69430-111	M1	28 -162	1	
	25-69430-1111	M1		1	
	25-69430-1113	M1		1	
	25-69430-1115	M1		1	
	25-69430-1117	M1		1	
	25-69430-1119	M1		1	
	25-69430-113	M1	28 -162	1	
	25-69430-115	M1	28 - 8	1	
	25-69430-117	M1	28 - 8	1	
	25-69430-119	M1	28 -156	1	
	25-69431- 7		28 - 94	1	XA-125
	25-69431- 9	M1	28 - 94	1	
	25-69431- 11	M1	28 -153	1	
	25-69431- 13	M1	28 -153	1	
	25-69431- 15	M1	28 -134	1	
	25-69431- 17	M1	28 -134	1	
	25-69431- 19	M1	28 -131	1	
	25-69431- 21	M1	28 -131	1	
	25-69431- 23	M1	28 -115	1	
	25-69431- 25	M1	28 -115	1	
	25-69431- 31	M1	28 - 62	1	
	25-69431- 33	M1	28 - 62	1	
	25-69431- 35	M1	28 - 61	1	
	25-69431- 37	M1	28 - 61	1	
	25-69431- 43	M1	28 - 73	1	
	25-69431- 45	M1	28 - 73	1	
	25-69431- 47	M1	28 - 72	1	
	25-69431- 49	M1	28 - 72	1	
	25-69431- 55	M1	28 - 76	1	
	25-69431- 57	M1	28 - 76	1	
	25-69431- 59	M1	28 - 75	1	
	25-69431- 61	M1	28 - 75	1	
	25-69431- 67	M1	28 - 74	1	
	25-69431- 69	M1	28 - 74	1	
	25-69431- 71	M1	28 -141	1	
	25-69431- 73	M1	28 -141	1	
	25-69431- 75	M1	28 -142	1	
	25-69431- 77	M1	28 -142	1	
	25-69431- 79	M1	28 - 97	1	
	25-69431- 81	M1	28 - 97	1	
	25-69431- 87	M1	28 -104	1	
	25-69431- 89	M1	28 -104	1	
	25-69431- 99	M1	28 -114	1	
	25-69431-1007			1	
	25-69431-1009	M1		1	
	25-69431-101	M1	28 -114	1	
	25-69431-1011	M1		1	
	25-69431-1013	M1		1	
	25-69431-1015	M1		1	
	25-69431-1017	M1		1	
	25-69431-1019	M1		1	
	25-69431-1021	M1		1	
	25-69431-1023	M1		1	
	25-69431-1025	M1		1	
	25-69431-103	M1	28 -121	1	
	25-69431-1031	M1		1	
	25-69431-1033	M1		1	
	25-69431-1035	M1		1	
	25-69431-1037	M1		1	
	25-69431-1043	M1		1	
	25-69431-1045	M1		1	
	25-69431-1047	M1		1	
	25-69431-1049	M1		1	
	25-69431-105	M1	28 -121	1	
	25-69431-1055	M1		1	
	25-69431-1057	M1		1	
	25-69431-1059	M1		1	
	25-69431-1061	M1		1	
	25-69431-1067	M1		1	
	25-69431-1069	M1		1	
	25-69431-107	M1	28 - 96	1	
	25-69431-1071	M1		1	
	25-69431-1073	M1		1	
	25-69431-1079	M1		1	
	25-69431-1081	M1		1	
	25-69431-1087	M1		1	
	25-69431-1089	M1		1	
	25-69431-109	M1	28 - 96	1	
	25-69431-1099	M1		1	
	25-69431-1101	M1		1	
	25-69431-1103	M1		1	
	25-69431-1105	M1		1	
	25-69431-1107	M1		1	
	25-69431-1109	M1		1	
	25-69431-1115	M1		1	
	25-69431-1117	M1		1	
	25-69431-1119			6	
	25-69431-1121			6	
	25-69431-115	M1	28 -127	1	
	25-69431-117	M1	28 -127	1	
	25-69431-119		28 - 31	6	
	25-69431-121		28 - 32	6	

STOCK	PART NUMBER	SOURCE CODE	FIGURE & INDEX NO.	QTY. PER A/C	MICROFILM INDEX
	25-69438- 3		110 - 24	4	
	25-69444- 3		28 - 64	4	
	25-69449- 3			2	
	25-69450- 3			2	
	25-70000- 3	X2	45 - 13	1	H-37
	25-70000- 5		45 - 13	1	
	25-70000- 7			2	
	25-70001- 3	X2	87 - 19	1	H-38
	25-70001- 5	X2	87 - 19	1	
	25-70002	*		1	
	25-70002- 1	A	195 -	1	
	25-70003	*		1	
	25-70003- 1	A	195 -	1	
	25-70004- 5	M1	45 - 27	2	XA-126
	25-70005- 7	M1	45 - 33	2	XA-294
	25-70005- 9	M1	45 - 34	2	
	25-70006- 5	M1	45 - 15	1	XA-295
	25-70006- 7			2	
	25-70007- 5	M1	45 - 16	1	XA-296
	25-70007- 7			2	
	25-70008- 5	M1	45 - 28	2	XA-127
	25-70009- 5	M1	195 - 1	1	XA-297
	25-70010- 3	M1		51	
	25-70011- 1	M1	195 - 8	1	XA-298
	25-70011- 3	M1	195 -	1	
	25-70011- 5	M1	195 - 15	1	
	25-70011- 7	M1	195 - 14	1	
	25-70011- 9	M1	195 - 13	2	
	25-70011- 11	M1	195 - 12	2	
	25-70011- 13	M1	195 - 11	1	
	25-70011- 15	M1	195 - 10	1	
	25-70012- 1	M1	195 - 16	1	XA-299
	25-70012- 3	M1	195 -	1	
	25-70012- 5	M1	195 - 25	2	
	25-70012- 7	M1	195 - 24	2	
	25-70012- 9	M1	195 - 23	2	
	25-70012- 11	M1	195 - 22	1	
	25-70012- 13	M1	195 - 21	1	
	25-70012- 15	M1	195 - 20	2	
	25-70012- 17	M1	195 - 19	2	
	25-70012- 19	M1	195 - 18	2	
	25-70014- 1	M1	195 - 26	1	XA-128
	25-70014- 3	M1	195 -	1	
	25-70014- 5	M1	195 - 30	2	
	25-70014- 7	M1	195 - 29	1	
	25-70014- 9	M1	195 - 28	1	
	25-70015- 1	M1	195 - 31	1	
	25-70015- 2	M1	195 - 32	1	
	25-70015- 9	M1	195 - 39	4	
	25-70015- 11	M1	195 - 37	1	
	25-70015- 13	M1	195 - 38	1	
	25-70015- 17		195 - 41	2	
	25-70015- 18		195 - 42	2	
	25-70015- 19		195 -	1	
	25-70015- 20		195 -	1	
	25-70015- 21		195 -	1	
	25-70015- 22		195 -	1	
	25-70015- 23		195 - 40	4	
	25-70015- 25		195 - 45	2	
	25-70015- 27		195 - 46	4	
	25-70016- 1	M1	195 - 56	1	XA-300
	25-70016- 3	M1	195 -	1	
	25-70016- 5	M1	195 - 60	1	
	25-70016- 7	M1	195 - 59	1	
	25-70016- 9	M1	195 - 58	2	
	25-70017- 1	M1	195 - 61	1	
	25-70017- 3	M1	195 -	1	
	25-70017- 5	M1	195 - 68	1	
	25-70017- 7	M1	195 - 67	1	
	25-70017- 9	M1	195 - 66	1	
	25-70017- 11	M1	195 - 65	1	
	25-70017- 13	M1	195 - 64	1	
	25-70017- 15	M1	195 - 63	1	
	25-70018- 1	M1	195 - 47	1	
	25-70018- 3	M1	195 - 48	1	
	25-70018- 5	M1	195 -	1	
	25-70018- 7	M1	195 -	1	
	25-70018- 9	M1	195 - 55	2	
	25-70018- 11	M1	195 - 54	2	
	25-70018- 13	M1	195 - 52	3	
			195 - 53		
	25-70018- 19		195 - 51	2	
	25-70018- 21		195 - 50	1	
	25-70019- 1	M1	195 - 69	1	
	25-70019- 3	M1	195 -	1	
	25-70019- 5	M1	195 - 73	2	
	25-70019- 7	M1	195 - 71	1	
	25-70019- 9	M1	195 - 74	2	
	25-70019- 11	M1	195 - 75	2	
	25-70019- 15	M1	195 - 76	1	
	25-70019- 17	M1	195 - 72	2	
	25-70020- 1	M1	195 - 77	1	XA-129
	25-70020- 3	M1	195 -	1	
	25-70020- 5	M1	195 - 81	2	
	25-70020- 7	M1	195 - 80	1	
	25-70020- 9	M1	195 - 79	2	
	25-70021- 1	M1	195 - 82	1	XA-301
	25-70021- 3	M1	195 -	1	
	25-70021- 5	M1	195 - 88	3	
	25-70021- 7	M1	195 - 87	2	
	25-70021- 9	M1	195 - 86	1	
	25-70021- 11	M1	195 - 85	2	
	25-70021- 13	M1	195 - 84	2	
	25-70023- 3	M1	195 - 4	1	
	25-70025- 3	M1	195 - 6	1	
	25-70027- 3			14	
	25-71000- 1	*	165 -	1	C-173
	25-71001- 1	*	165 - 1	1	XB-30
			166 -		
	25-71002- 1	A	166 - 3	1	D-190
			173 -		
	25-71002- 2	A	166 - 4	1	
			173 -		
	25-71002- 3	A	166 - 5	1	
			173 -		
	25-71002- 4	A	166 - 6	1	
			173 -		
	25-71007- 1	*	44 - 18	2	H-39
			72 -		
	25-71012- 1	A	83 - 11	1	H-211
R94MDA-	25-71013- 1	P1	83 - 17	1	H-40
	25-71013- 3	X1		1	
	25-71013- 3C	X1		1	
R82MDA-	25-71014- 1	P1	83 - 35	1	H-41
	25-71014- 3C	X1		1	
	25-71014- 5	M1		1	
R94MDA-	25-71015- 3	P1	83 - 16	1	C-174
	25-71016- 1	M1	83 - 27	1	C-175
	25-71016- 3	M1		1	
	25-71021- 3	M1	173 - 42	16	B-129
R94MDA-	25-71022- 3	P1	173 - 55	2	H-42
	25-71022- 3F	X1		2	
R94MDA-	25-71022- 4	P1	173 - 55	2	
	25-71022- 4F			2	
	25-71023- 3	M1	173 - 50	6	
R94MDA-	25-71024- 3	P1	173 - 49	2	
	25-71024- 3F			2	
R94MDA-	25-71024- 4	P1	173 - 49	2	
	25-71024- 4F	X1		2	
R94MDA-	25-71025- 3	P1	173 - 47	16	D-191
			173 - 53		
	25-71025- 3F	X1		16	
	25-71026- 3	M1	173 - 56	8	C-177
	25-71027- 3F	X1		8	D-192
R94MDA-	25-71027- 5	P1	173 - 44	8	
	25-71028- 3	M1	173 - 35	8	
R94MDA-	25-71029- 5	P1	173 - 33	8	
	25-71030- 1	A	166 - 8	2	H-44
			173 -		
	25-71030- 2	A	166 - 8	2	
			173 -		
	25-71030- 3	A	166 - 9	2	
			173 -		
	25-71030- 4	A	166 - 9	2	
			173 -		
R94MDA-	25-71031- 3	P1	173 - 48	8	C-180
			173 - 54		
R94MDA-	25-71032- 3	P	173 - 46	16	C-181
			173 - 52		
	25-71033- 3	M1	173 - 36	8	B-130
	25-71034- 3	M1	173 - 34	8	C-182
	25-71043- 1	M1	166 -	2	
	25-71043- 2	M1	166 -	2	
	25-71043- 5	M1	166 - 38	4	H-46
	25-71043- 9			4	
	25-71043- 13			2	
	25-71043- 14			2	
	25-71043- 19			4	
	25-71043- 33			8	
	25-71043- 35			4	
	25-71043- 37			4	
	25-71043- 39			2	
	25-71043- 40			2	
	25-71043- 45			2	
	25-71043- 46			2	
	25-71043- 47			2	
	25-71043- 48			2	
	25-71043- 51			4	
	25-71043- 53			4	
	25-71043- 57	M1	166 - 35	2	
	25-71043- 58	M1	166 - 35	2	
	25-71043- 59	M1		2	
	25-71043- 60	M1		2	
	25-71043- 61	M1	166 - 37	2	
	25-71043- 62	M1	166 - 37	2	
	25-71043- 63	M1		2	
	25-71043- 64	M1		2	
	25-71043- 65	M1		4	
	25-71044- 1	M1	166 -	2	XA-302
	25-71044- 2	M1	166 -	2	
	25-71044- 5	M1	166 - 42	4	
	25-71044- 7	M1	166 - 40	4	

STOCK	PART NUMBER	SOURCE CODE	FIGURE & INDEX NO.	QTY. PER A/C	MICROFILM INDEX
	25-71044- 11	M1		2	
	25-71044- 12	M1		2	
	25-71044- 15	M1		4	
	25-71044- 17	M1		4	
	25-71044- 19	M1		8	
	25-71044- 21	M1		4	
	25-71044- 23	M1		4	
	25-71044- 25	M1		6	
	25-71044- 27	M1		4	
	25-71044- 29	M1	166 -	2	
	25-71044- 31	M1	166 -	2	
	25-71044- 33	M1	166 -	4	
	25-71044- 36	M1	166 -	4	
	25-71044- 37	M1		2	
	25-71044- 38	M1		2	
	25-71044- 39	M1		2	
	25-71044- 40	M1		2	
	25-71044- 41	M1	166 - 41	2	
	25-71044- 42	M1	166 - 41	2	
	25-71044- 43			4	
	25-71044- 47			4	
	25-71045- 5	X1		2	D-194
	25-71045- 9			2	
	25-71045- 11			2	
	25-71045-301		46 - 93	3	
			47 - 84		
	25-71046- 1		46 - 94	2	B-131
			47 - 83		
	25-71046- 7			2	
	25-71046- 9			2	
	25-71049- 1	A	166 - 7	8	H-48
			173 -		
	25-71049* 3			16	
R94MDA-	25-71050- 5	P1	173 - 43	16	
R94MDA-	25-71051- 3	P1	173 - 37	16	C-183
	25-71051- 3C	X1		16	
	25-71052- 1	A1	173 - 32	8	
	25-71053- 1	M1	171 - 1	2	B-133
	25-71053- 2	M1	171 - 1	2	
	25-71053- 3	M1		4	
	25-71053- 5			4	
	25-71054- 3	M1	171 - 8	2	
	25-71054- 5	M1	171 - 9	2	
	25-71055- 3	X1		1	H-51 XA-303
					XA-304
	25-71055- 4			1	
	25-71055- 5C			1	
	25-71055- 6C			1	
	25-71057- 3		168 - 12	1	
R82MDA-	25-71066- 1	P1	166 - 16	1	H-56 THRU H-58
			167 -		
	25-71066- 3	M1		2	
	25-71066- 5	M1		2	
	25-71066- 6	M1		2	
	25-71066- 7	M1		4	
	25-71066- 9	M1		1	
	25-71066- 11	M1		4	
	25-71066- 17	M1		1	
	25-71066- 21	M1		1	
	25-71066- 23	M1		1	
	25-71066- 25	M1		1	
	25-71066- 27	M1		1	
	25-71066- 31	M1		1	
	25-71066- 33	M1		1	
	25-71066- 35	M1		4	
	25-71066- 43	M1		1	
	25-71066- 45	M1		1	
	25-71066- 47	M1		1	
	25-71066- 49	M1		1	
	25-71066- 51	M1		1	
	25-71066- 53	M1		1	
	25-71066- 55	M1		1	
	25-71066- 57	M1		1	
	25-71066- 59			1	
	25-71066- 61			1	
	25-71068- 1	*	167 -	1	H-59
	25-71069- 1	*	166 - 17	1	H-60
			167 -		
	25-71070- 3	A	167 - 41	1	H-61
			168 -		
	25-71071- 1	A1	167 - 67	2	H-62
			168 -		
	25-71071- 3	M	168 - 38	2	
	25-71071- 5	M	168 - 39	2	
	25-71071- 7	M	168 - 43	2	
	25-71071- 9	M	168 - 44	2	
	25-71072- 1	*	166 - 10	1	H-63
			171 -		
	25-71072- 2	*	166 - 11	1	
			171 -		
R82MDA-	25-71073- 1	P1	172 - 18	1	
R82MDA-	25-71073- 2	P1	172 - 18	1	
	25-71074- 3	M1	168 - 33	2	
	25-71075- 3	M1	168 - 55	2	
R94MDA-	25-71077- 1	P1	167 - 60	1	C-184
	25-71077- 1C	X1		2	
	25-71077- 3	X1		1	
	25-71077- 5	X1		1	
	25-71079- 3	M1	168 - 56	2	
	25-71085- 1	M1	167 - 64	1	C-187
	25-71085- 2	M1	167 - 65	1	
	25-71085- 3	M1		2	
	25-71085- 5	M1		3	
	25-71085- 7	M1		2	
	25-71086- 1	A	167 - 54	1	
	25-71087- 1	A	167 - 43	1	
	25-71088- 3	M	83 - 13	1	B-136
	25-71089- 3	M	83 - 15	1	B-137
	25-71090- 3			1	H-64 H-65
	25-71090- 3C			1	
	25-71090- 4			1	
	25-71090- 4C			1	
R82MDA-	25-71090- 7	P1	46 - 86	1	
	25-71090- 7C	X1		1	
R82MDA-	25-71090- 8	P1	47 - 79	1	
	25-71090- 8C	X1		1	
	25-71091- 3			1	H-66 H-67
	25-71091- 3C			1	
	25-71091- 4			1	
	25-71091- 4C			1	
R82MDA-	25-71091- 5	P1	46 - 90	1	
	25-71091- 5C	X1		1	
R82MDA-	25-71091- 6	P1	47 - 76	1	
	25-71091- 6C	X1		1	
	25-71092- 3	M1	167 - 53	1	B-138
R94MDA-	25-71093- 3	P1	167 - 59	1	B-139
	25-71093- 3C	X1		1	
	25-71094- 3	M1	167 - 50	1	B-140
	25-71095- 5		167 - 46	1	B-141
	25-71096- 3	*	167 - 47	2	B-142
			167 - 56		
	25-71097- 3	M	167 - 49	2	A-83
			167 - 58		
	25-71098- 3	M1	167 - 52	1	
	25-71100- 1	A	168 -	1	D-198
	25-71102- 3	M1	168 - 7	1	B-143
R94MDA-	25-71103- 3	P	168 - 5	1	
	25-71104- 5	M1	168 - 8	1	B-145
	25-71105- 3	M1	168 - 30	2	B-146
R94MDA-	25-71107- 3	P1	168 - 25	1	D-199
	25-71108- 3C	X1		1	D-200
	25-71108- 5	X1		1	
	25-71109- 5	M1	168 - 26	1	B-148
	25-71110- 3			1	
R94MDA-	25-71111- 1	P1	168 - 20	1	B-149
	25-71112- 7	X1		1	B-150
	25-71113- 1	X1		1	B-151
	25-71114- 3	X1		1	B-152
	25-71115- 3	X1		1	B-153
R94MDA-	25-71116- 1	P1	168 - 16	1	
	25-71117- 3	X1		1	B-154
	25-71117- 3C	X1		1	
	25-71118- 5			2	B-155
R94MDA-	25-71118- 11	P1	168 - 21	1	
	25-71119- 5	M1	168 - 22	1	
	25-71120- 3	M1	168 - 1	1	B-157
	25-71121- 5	M1	168 - 10	1	B-158
R94MDA-	25-71122- 3	P1	168 - 24	1	C-192
R94MDA-	25-71123- 1	P1	168 - 18	1	
R94MDA-	25-71124- 3	P1	168 - 53	2	
	25-71125- 3	M1	168 - 52	2	B-160
	25-71126- 3	M1	168 - 54	4	B-161
	25-71129- 1	A	168 -	2	C-194
	25-71130- 1	M1	169 - 8	8	C-195
			169 - 15		
			169 - 22		
			169 - 29		
	25-71130- 3	M1		8	
	25-71130- 5	M1		8	
	25-71131- 3	M1	169 - 6	8	B-163
			169 -		
			169 -		
			169 -		
	25-71132- 3	M1	169 - 7	8	C-196
			169 - 14		
			169 - 21		
			169 - 28		
	25-71143- 3	M1	168 - 34	2	B-170
	25-71144- 3	M1		15	C-199
	25-71144- 4	M1		15	
	25-71145- 1	A	166 - 12	2	
			169 -		
R94MDA-	25-71145- 3	P1	169 - 3	2	
	25-71146- 1	A	166 - 13	2	XB-21
			169 -		
R94MDA-	25-71146- 3	P1	169 - 11	2	
	25-71147- 1	A	166 - 14	2	XB-22
			169 -		
R94MDA-	25-71147- 3	P1	169 - 18	2	
	25-71148- 1	A	166 - 15	2	XB-23
			169 -		
R94MDA-	25-71148- 3	P1	169 - 25	2	

STOCK	PART NUMBER	SOURCE CODE	FIGURE & INDEX NO.	QTY. PER A/C	MICROFILM INDEX
	25-71149- 3	M1		8	A-87
	25-71151- 3	M1	172 - 22	1	XA-35
	25-71151- 4	M1	172 - 22	1	
R82MDA-	25-71152- 3	P1	167 - 18	1	C-200
	25-71152- 3C	X1		1	
	25-71153- 3	M1	167 - 16	1	B-172
	25-71154- 3	M1	168 - 17	1	B-173
	25-71155- 3	M1	167 - 14	1	B-174
R94MDA-	25-71156- 3	P1	171 - 4	2	
R94MDA-	25-71156- 5	P1	171 - 5	2	
	25-71158- 3	M1	168 - 15	1	
	25-71159- 3	X1		1	C-201
	25-71160- 3	M1	168 - 11	1	A-88
	25-71161- 3	M1	168 - 4	2	
	25-71162- 3	M1	166 -	6	
			166 -		
	25-71163- 5		168 - 9	2	C-202
	25-71163- 5C			2	
	25-71171- 3	M1		4	C-204
R82MDA-	25-71172- 3	P	167 - 19	4	B-179
	25-71173- 3	M1	167 - 12	1	
	25-71173- 5			1	
	25-71173- 7			1	
	25-71174- 5			1	
	25-71174-301			1	
	25-71175- 3	M1	168 - 51	2	
	25-71176- 5	M1	168 - 50	2	
R94MDA-	25-71177- 1	P1	166 - 29	4	D-205
	25-71177- 3	X1		4	
	25-71177- 3C	X1		4	
	25-71178- 1	M1		1	C-205
	25-71179- 1	M1		1	C-206
	25-71179- 3	M1		1	
	25-71180- 3	M1	167 - 9	2	C-207
	25-71180- 3F	X1		2	
R94MDA-	25-71181- 3	P1	166 - 45	1	
	25-71182- 1	*	166 - 1	1	D-206
			172 -		
	25-71182- 2	*	166 - 2	1	
			172 -		
	25-71182- 3			8	
	25-71184- 3	M1	167 - 10	1	
	25-71184- 5	M1	167 - 1	54	
			167 - 4		
	25-71186- 3	M1	167 - 13	1	B-182
	25-71187- 3	M1	167 - 32	1	B-183
	25-71187- 4	M1	167 - 33	1	
	25-71188- 1		169 - 12	4	
			169 - 26		
			170 -		
	25-71188- 3		169 - 4	4	
			169 - 19		
			170 -		
	25-71188- 5		170 - 6	15	
	25-71188-301		169 - 12	2	
			169 - 26		
			170 -		
	25-71188-303		169 - 4	2	
			169 - 19		
			170 -		
	25-71189- 5	M1	167 - 7	4	D-207
	25-71189- 5F	M1		8	
	25-71189- 6	M1	167 - 8	4	
	25-71190- 3	M1	167 - 26	2	B-184
	25-71191- 3	M1	167 - 23	2	B-185
	25-71191- 5	M1	167 - 21	2	
R94MDA-	25-71192- 3	M1	166 - 49	1	
R82MDA-	25-71193- 3	P	172 - 3	2	B-186
	25-71194- 5			1	H-69
	25-71194-301			1	
	25-71195- 3	M1		1	H-70
	25-71195- 4	M1		1	
	25-71196- 3	M1	167 - 6	3	
	25-71196- 5			3	D-208
	25-71197- 3	M1	167 - 3	1	D-209
	25-71197- 5			1	
	25-71198- 3	M1	166 - 53	1	
	25-71199- 7		167 - 30	1	B-188
	25-71200- 3	M1	167 - 36	2	
R94MDA-	25-71201- 3	P1	168 - 45	2	D-210
	25-71201- 3C	X1		2	
R94MDA-	25-71202- 3	P1	168 - 40	2	D-211
	25-71202- 3C	X1		2	
	25-71203- 1		72 - 5	1	
	25-71204- 1		72 - 11	1	
	25-71204-1-3			1	
	25-71204-1-3C			1	
	25-71205- 3		72 - 16	1	
	25-71206- 1		72 - 7	1	
	25-71206- 3			1	
	25-71206- 5			2	
	25-71206- 7			2	
	25-71207- 1		166 - 43	1	
	25-71207- 2		166 - 43	1	
	25-71207- 3			1	
	25-71207- 4			1	
	25-71207- 5			1	
	25-71207- 6			1	
	25-71207- 7			1	
	25-71207- 8			1	
	25-71207- 9			1	
	25-71207- 10			1	
	25-71207- 11			1	
	25-71207- 12			1	
	25-71207- 13			1	
	25-71207- 14			1	
	25-71207- 15			1	
	25-71207- 16			1	
	25-71208- 3	M1	108 -116	1	B-190
R94MDA-	25-71209- 3	P	173 - 5	8	B-191
			173 -		
			173 - 20		
			173 -		
	25-71210- 1	X1		8	XB-31 XB-32
	25-71210- 3	X1		8	
	25-71210- 4	X1		8	
	25-71210- 5	M1		8	
	25-71210- 9	M1		16	
	25-71210- 11	M1		32	
	25-71210- 13	M1		32	
	25-71210- 15	M1		32	
	25-71210- 17	X1		8	
	25-71210- 18	X1		8	
	25-71210- 25	X1		16	
	25-71210- 26	X1		16	
	25-71210- 27	M1		8	
	25-71210- 28	M1		8	
	25-71210- 31	M1		8	
	25-71210- 33	M1		8	
	25-71210- 37	M1		8	
	25-71210- 39	M1		8	
	25-71210- 41			8	
	25-71210- 43			8	
	25-71210- 45	M1		8	
	25-71210- 49			14	
	25-71210- 50			2	
	25-71211- 1		166 - 33	1	
	25-71211- 2		166 - 33	1	
	25-71211- 3			4	
	25-71211- 5			1	
	25-71211- 6			1	
	25-71211- 7			1	
	25-71211- 8			1	
	25-71212- 1		166 - 34	1	
	25-71212- 2		166 - 34	1	
	25-71212- 3			1	
	25-71212- 4			1	
	25-71212- 5			1	
	25-71212- 6			1	
	25-71212- 7			2	
	25-71212- 9			2	
	25-71213- 1		166 - 44	1	
	25-71213- 2		166 - 44	1	
	25-71213- 3			1	
	25-71213- 4			1	
	25-71213- 5			1	
	25-71213- 6			1	
	25-71213- 7			1	
	25-71213- 8			1	
	25-71213- 9			1	
	25-71213- 10			1	
	25-71213- 11			1	
	25-71213- 12			1	
	25-71213- 13			1	
	25-71213- 14			1	
	25-71213- 15			1	
	25-71213- 16			1	
R94MDA-	25-71218- 3	P	173 - 1	12	B-192
			173 - 10		
			173 -		
			173 -		
	25-71223- 1	M1	166 - 20	2	H-71
	25-71223- 3	M1		2	
	25-71223- 5	M1		2	
	25-71223- 7	M1		2	
	25-71223- 9	M1		2	
	25-71223- 11	M1		2	
	25-71223- 13	M1		2	
	25-71223- 15	M1		2	
	25-71223- 17	M1		2	
	25-71223- 19	M1		2	
	25-71223- 21	M1		2	
	25-71223- 23	M		2	
	25-71224- 1	M1	166 - 26	2	H-72
	25-71224- 3	M1		2	
	25-71224- 5	M1		2	
	25-71224- 7	M1		2	
	25-71224- 9	M1		2	
	25-71224- 11	M1		2	
	25-71224- 13	M1		2	
	25-71224- 15	M1		2	
	25-71224- 17	M1		2	

STOCK	PART NUMBER	SOURCE CODE	FIGURE & INDEX NO.	QTY. PER A/C	MICROFILM INDEX
	25-71224- 18	M1		2	
	25-71224- 19	M1		2	
	25-71224- 21	M1		4	
	25-71224- 23			1	
	25-71224- 25			2	
	25-71224- 28			1	
	25-71224- 29			1	
	25-71225- 3		167 - 29	1	
	25-71226- 3	M	167 - 63	1	B-193
	25-71227- 3	M1	168 - 48	2	
	25-71228- 3C	X1		8	C-211
	25-71228- 5			8	
	25-71228- 9			4	
	25-71228- 9C			4	
	25-71229- 5	M1		8	C-212
	25-71229- 7			4	
	25-71230- 3C	X1		4	D-213
	25-71230- 4C			4	
R94MDA-	25-71230- 5	P1	170 - 10	4	
R94MDA-	25-71230- 6	P1	170 - 10	4	
	25-71231- 5	M1	170 - 5	8	B-195
	25-71232- 5	M1	170 - 7	8	B-196
	25-71234- 5	M1	170 - 2	8	
	25-71235- 1	M1	170 - 8	8	
	25-71235-301		170 - 9	4	
	25-71236- 1	X1	170 - 3	8	B-214
	25-71236-301		170 - 4	4	
R82MDA-	25-71240- 3	P	50 - 9	2	B-199
	25-71241- 3	M1	50 -	2	C-215
	25-71242- 3			1	
	25-71243- 5	X1	50 - 10	2	
	25-71243- 5C	X1		2	H-73 H-74
R82MDA-	25-71246- 1	P1	50 - 26	2	C-216
	25-71246- 3	X1		2	
	25-71246-1-3C	X1		1	
R82MDA-	25-71247- 3	P1	72 - 4	1	C-217
	25-71248- 3	M1	72 - 2	2	B-200
	25-71250- 3	M	168 - 23	1	
	25-71251- 3	M1	166 - 21	14	
	25-71251- 5	M1	166 - 23	4	
	25-72001- 1		135 - 78	1	
	25-72002- 1	*	62 - 14	7	
			64 - 13		
			69 - 2		
			135 - 23		
	25-72003- 1	*	44 - 13	1	XA-305 THRU XA-310
			63 -		
			64 -		
	25-72004- 59	M1		1	XA-133
	25-72005- 5	M1	63 - 3	1	XA-134
	25-72005- 7	M1	63 - 5	1	
	25-72005- 9	M1	63 - 7	1	
	25-72005- 29	M1	63 - 25	1	
	25-72005- 39	M1	63 - 36	1	
	25-72005- 73	M1	63 - 57	1	
	25-72005- 77	M1	63 - 1	1	
	25-72005- 79	M1	63 - 35	1	
	25-72005- 87	M1	63 - 44	1	
	25-72005- 91	M1	63 - 9	1	
	25-72005-1005	M1		1	
	25-72005-1007	M1		1	
	25-72005-1009	M1		1	
	25-72005-101	M1	63 - 22	1	
	25-72005-1029	M1		1	
	25-72005-103	M1	63 - 27	1	
	25-72005-1039	M1		1	
	25-72005-107	M1	63 - 50	1	
	25-72005-1073	M1		1	
	25-72005-1077	M1		1	
	25-72005-1079	M1		1	
	25-72005-1087	M1		1	
	25-72005-109	M1	63 - 52	1	
	25-72005-1091	M1		1	
	25-72005-1101	M1		1	
	25-72005-1103	M1		1	
	25-72005-1107	M1		1	
	25-72005-1109	M1		1	
	25-72005-111		63 - 37	1	
	25-72005-1111			1	
	25-72005-1113			1	
	25-72005-1115			1	
	25-72005-1117			1	
	25-72005-1119			1	
	25-72005-1121			1	
	25-72005-113		63 - 14	1	
	25-72005-115		63 - 18	1	
	25-72005-117		63 - 16	1	
	25-72005-119			1	
	25-72005-121		63 - 20	1	
	25-72007- 1	*	135 - 63	1	
	25-72008- 5	M1	64 - 5	1	
	25-72008- 7	M1	64 - 9	1	
	25-72008- 9	M1	64 - 53	1	
	25-72008- 13	M1	64 - 51	1	
	25-72008- 15	M1	64 - 50	1	
	25-72008- 17	M1	64 - 49	1	
	25-72008- 19	M1	64 - 56	1	
	25-72008- 23	M1	64 - 47	1	
	25-72008- 25	M1	64 - 45	1	
	25-72008- 27	M1	64 - 44	1	
	25-72008- 31	M1	64 - 12	1	
	25-72008- 33	M1	64 - 15	1	
	25-72008- 35	M1	64 - 22	1	
	25-72008- 37	M1	64 - 33	1	
	25-72008- 41	M1	64 - 37	1	
	25-72003- 43	M1	64 - 39	1	
	25-72008- 45	M1	64 - 42	1	
	25-72008- 47	M1	63 - 74	1	
	25-72008- 53	M1	63 - 81	1	
	25-72008- 55	M1	63 - 83	1	
	25-72008- 57	M1	63 - 87	1	
	25-72008- 59	M1	63 - 89	1	
	25-72008- 61	M1	63 - 90	1	
	25-72008- 63		64 - 54	1	
	25-72008- 65		64 - 27	1	
	25-72008- 67		64 - 1	1	
	25-72008- 69		63 - 78	1	
	25-72008- 71		63 - 76	1	
	25-72008- 73		64 - 3	1	
	25-72008-1005	M1		1	
	25-72008-1007	M1		1	
	25-72008-1009	M1		1	
	25-72008-1013	M1		1	
	25-72008-1015	M1		1	
	25-72008-1017	M1		1	
	25-72008-1019	M1		1	
	25-72008-1023	M1		1	
	25-72008-1025	M1		1	
	25-72008-1027	M1		1	
	25-72008-1031	M1		1	
	25-72008-1033	M1		1	
	25-72008-1035	M1		1	
	25-72008-1037	M1		1	
	25-72008-1041	M1		1	
	25-72008-1043	M1		1	
	25-72008-1045	M1		1	
	25-72008-1047	M1		1	
	25-72008-1053	M1		1	
	25-72008-1055	M1		1	
	25-72008-1057	M1		1	
	25-72008-1059	M1		1	
	25-72008-1061	M1		1	
	25-72008-1063			1	
	25-72008-1065			1	
	25-72008-1067			1	
	25-72008-1069			1	
	25-72008-1071			1	
	25-72008-1073			1	
R82MDA-	25-72009- 3	P1	64 - 48	1	
R82MDA-	25-72009- 4	P1	64 - 25	1	
	25-72014- 1	*	44 - 8	1	H-81
			62 -		
	25-72016- 5	M1	62 - 4	1	XA-36
	25-72016- 7	M1	62 - 12	1	
	25-72016- 9	M1	62 - 18	1	
	25-72016- 11	M1	62 - 20	1	
	25-72016- 17		62 - 22	1	
	25-72016- 19		62 - 17	1	
	25-72016- 21		62 - 1	1	
	25-72016-1005	M1		1	
	25-72016-1007	M1		1	
	25-72016-1009	M1		1	
	25-72016-1011	M1		1	
	25-72016-1017			1	
	25-72016-1019			1	
	25-72016-1021			1	
	25-72017- 1	M1	62 - 7	2	C-219
	25-72017- 5	M1	62 - 8	2	
R837DA-	25-72018- 1	P1	172 - 1	4	D-217
	25-72019- 5	M1	130 - 52	2	D-218
	25-72019- 7	M1	130 - 51	2	
	25-72019- 11	M1	135 - 18	2	
	25-72019- 13	M1	135 - 22	2	
	25-72019- 21	M1	135 - 24	2	
	25-72019- 23	M1	135 - 26	2	
	25-72019- 27	M1	135 - 1	2	
	25-72019- 31	M1	135 - 25	2	
	25-72019- 35	M1	135 - 3	2	
	25-72019- 37	M1	135 - 2	2	
	25-72019-1005	M1		2	
	25-72019-1007	M1		2	
	25-72019-1011	M1		2	
	25-72019-1013	M1		2	
	25-72019-1021	M1		2	
	25-72019-1023	M1		2	
	25-72019-1027	M1		2	
	25-72019-1031	M1		2	
	25-72019-1035	M1		2	
	25-72019-1037	M1		2	
R82MDA-	25-72021- 1	P1	129 - 44	1	D-219
R82MDA-	25-72022- 3	P1	129 - 51	1	C-220

STOCK	PART NUMBER	SOURCE CODE	FIGURE & INDEX NO.	QTY. PER A/C	MICROFILM INDEX
R82MDA-	25-72023- 3	P1	129 - 58	1	C-221
R82MDA-	25-72024- 1	P1	129 - 48	1	C-222
	25-72024- 7			1	
R82MDA-	25-72025- 3	P	129 - 52	1	
R82MDA-	25-72026- 1	P1	129 - 55	1	C-223
	25-72026- 3	X1		1	
	25-72026- 5	X1		2	
R82MDA-	25-72027- 3	P1	129 - 47	1	B-203
	25-72028- 1	M1	62 - 24	5	B-204
			63 - 39		
			135 - 34		
	25-72029- 3	M1	62 - 26	5	A-90
			63 -		
			69 - 25		
	25-72030- 1	M1		4	XA-81
	25-72030- 3	M1		6	
	25-72031- 3	M1	64 -	2	
	25-72031- 7	M	63 -	1	
	25-72035- 3		71 - 5	1	
	25-72035- 5		71 - 6	1	
	25-72035- 9		70 - 13	1	
	25-72035- 11		70 - 11	1	
	25-72035- 13		69 - 1	1	
	25-72035- 15		69 - 9	1	
	25-72035- 17		69 - 11	1	
	25-72035- 19		69 - 13	1	
	25-72035- 21		69 - 15	1	
	25-72035- 23		69 - 28	1	
	25-72035- 25		69 - 29	1	
	25-72035- 27		69 - 30	1	
	25-72035- 29		70 - 2	1	
	25-72035- 31		70 - 4	1	
	25-72035- 33		70 - 7	1	
	25-72035- 37		71 - 3	1	
	25-72035- 39		71 - 1	1	
	25-72035- 41		69 - 20	1	
	25-72035- 43		69 - 22	1	
	25-72035- 45		69 - 23	1	
	25-72035- 47		69 - 68	1	
	25-72035- 49		70 - 40	1	
	25-72035- 53		70 - 47	1	
	25-72035- 55		70 - 52	1	
	25-72035- 57		70 - 53	1	
	25-72035- 59		70 - 70	1	
	25-72035- 61		70 - 64	1	
	25-72035- 63		70 - 61	1	
	25-72035- 65		70 - 63	1	
	25-72035- 67		70 - 46	1	
	25-72035- 69		70 - 45	1	
	25-72035- 71		69 - 17	1	
	25-72035- 73		70 - 44	1	
	25-72035- 75		70 - 42	1	
	25-72035- 77		70 - 14	1	
	25-72035- 79		70 - 9	1	
	25-72035- 81			1	
	25-72035- 83			1	
	25-72035- 85			1	
	25-72035- 87			1	
	25-72035- 89			1	
	25-72035-1003			1	
	25-72035-1005			1	
	25-72035-1009			1	
	25-72035-1011			1	
	25-72035-1013			1	
	25-72035-1017			1	
	25-72035-1019			1	
	25-72035-1021			1	
	25-72035-1023			1	
	25-72035-1025			1	
	25-72035-1027			1	
	25-72035-1029			1	
	25-72035-1031			1	
	25-72035-1033			1	
	25-72035-1035			1	
	25-72035-1037			1	
	25-72035-1039			1	
	25-72035-1041			1	
	25-72035-1043			1	
	25-72035-1045			1	
	25-72035-1047			1	
	25-72035-1049			1	
	25-72035-1053			1	
	25-72035-1055			1	
	25-72035-1057			1	
	25-72035-1059			1	
	25-72035-1061			1	
	25-72035-1063			1	
	25-72035-1065			1	
	25-72035-1067			1	
	25-72035-1069			1	
	25-72035-1071			1	
	25-72035-1073			1	
	25-72035-1075			1	
	25-72035-1077			1	
	25-72035-1079			1	
	25-72035-1081			1	

STOCK	PART NUMBER	SOURCE CODE	FIGURE & INDEX NO.	QTY. PER A/C	MICROFILM INDEX
	25-72035-1083			1	
	25-72035-1085			1	
	25-72035-1087			1	
	25-72035-1089			1	
	25-72036- 3		63 - 42	1	
	25-72036- 5		63 - 45	1	
	25-72036- 7		63 - 46	1	
	25-72036- 9		63 - 47	1	
	25-72036- 11		63 - 49	1	
	25-72036- 13		63 - 31	1	
	25-72036- 15		63 - 30	1	
	25-72036- 17		63 - 28	1	
	25-72036- 19		63 - 55	1	
	25-72036- 21		63 - 53	1	
	25-72036- 23		63 - 56	1	
	25-72036-1003			1	
	25-72036-1005			1	
	25-72036-1007			1	
	25-72036-1009			1	
	25-72036-1011			1	
	25-72036-1013			1	
	25-72036-1015			1	
	25-72036-1017			1	
	25-72036-1019			1	
	25-72036-1021			1	
	25-72036-1023			1	
	25-72050- 1	M1	63 - 65	1	
	25-72050- 3	M1		1	
	25-72051- 1	M1	63 - 68	1	B-205
	25-72051- 3	M1		1	
	25-72052- 1	M1	63 - 60	1	B-206
	25-72052- 2	M1	63 - 58	1	
	25-72052- 3	M1	63 -	1	
	25-72052- 5	M1	63 -	1	
	25-72053- 1	M1	63 - 63	1	
	25-72053- 3	M1		1	
	25-72053- 4	M1		1	
	25-72054- 3	M1	188 - 14	1	
	25-72056- 3		173 - 6	4	
			173 - 14		
			173 - 21		
			173 - 28		
	25-72056-1003			4	
	25-73001- 1		165 -	1	
	25-73001- 3			1	
	25-73001- 5			1	
	25-73001- 7			1	
	25-73001- 9			1	
	25-73001- 11			1	
	25-73001- 13			1	
	25-73056- 3		165 - 6	6	
	25-73056- 7		165 - 5	6	
	25-74000- 1	*	2 - 18	1	H-82
			13 -		
	25-74000- 2	*	2 - 18	1	
			13 -		
	25-74001- 1	*	7 -	1	D-220
	25-74001- 2	*	7 -	1	
	25-74002- 1			1	
	25-74002- 2			1	
	25-74003- 1			1	
	25-74003- 2			1	
	25-74051- 3	M1	7 - 48	4	
	25-74052- 3	*	4 -	1	D-221
	25-74052- 7	M1	4 - 31	1	
	25-74052- 9	M1	4 - 32	1	
	25-74053- 1	*	7 -	1	C-224
	25-74053- 2	*	7 -	1	
	25-74053- 3	M1	7 -	2	
	25-74054- 1	M1	13 - 26	2	
	25-74054- 3	M1	13 - 11	2	
	25-74055- 3	M1	13 - 25	2	
	25-74055- 5	M1	13 - 39	2	
	25-74055- 7	M1	13 - 38	2	
	25-74056- 1	M1	13 -	1	
	25-74056- 3		13 - 7	1	
	25-74057- 1	A1	4 -	1	
	25-74057- 3			1	
	25-74057- 5			2	
	25-74057- 7			2	
	25-74057-301		4 -	1	
	25-74058- 1	M1	4 - 53	1	
	25-74058- 3	M1		1	
	25-74059- 3	M1	4 - 54	1	
	25-74060- 3		4 - 56	1	
	25-74061- 3		4 - 53	2	
	25-74062- 1		13 - 10	2	
	25-74062- 3			2	
	25-74062- 5			2	
	25-74063- 1			1	
	25-74063- 3			1	
	25-75000- 1	*	15 - 7	2	XA-313
			34 -		
	25-75000- 2	*	15 - 7	2	
			34 -		
	25-75000-301		15 - 7	1	

STOCK	PART NUMBER	SOURCE CODE	FIGURE & INDEX NO.	QTY. PER A/C	MICROFILM INDEX
	25-75000-301		34 -		
	25-75000-302		15 - 7	1	
			34 -		
	25-75001- 1			1	
	25-75001- 2			1	
	25-75002- 1		178 -	1	
	25-75002- 2		178 -	1	
	25-75013- 1	*	35 - 53	2	
	25-75050- 1	*	15 -	2	H-84
	25-75050- 3	M1	15 -	2	
R82MDA-	25-75051- 3	P1	15 - 18	2	D-222
	25-75052- 3	M1	15 - 13	4	
	25-75053- 3	M1	33 - 10	2	
	25-75054- 3	M1	15 - 16	2	
	25-75055- 1	M1		1	
	25-75055- 3	M1		1	
	25-75055- 5			1	
	25-75055-301		33 -	1	
	25-75057- 3	M1	15 - 11	2	
	25-75058- 3	M1	15 - 20	2	
	25-75059- 3	M1	33 - 7	2	A-93
	25-75061- 3	M1	34 - 12	2	A-94
	25-75062- 1	M1	14 - 98	2	
	25-75062- 2	M1	14 - 98	2	
	25-75062- 3	M1		2	
	25-75062- 4	M1		2	
	25-75063- 3	M1	34 - 26	1	
	25-75065- 3	M1	179 - 9	2	
	25-75065- 5		179 - 10	4	
	25-75067- 1			1	
	25-75068- 1		14 -106	1	
			33 -		
	25-75069- 3			1	
	25-75070- 3			2	
	25-75071- 1			1	
	25-75071- 3			1	
	25-75072- 1			1	
	25-75072- 2			1	
	25-75072- 3			2	
	25-75072- 5			1	
	25-76000- 1	*	44 - 5	1	H-86 H-87
			95 -		
	25-76000-301		44 - 5	1	
			95 -		
	25-76001- 1	*	44 - 6	1	XA-314 THRU XA-318
			101 -		
			102 -		
			103 -		
			104 -		
	25-76001-301	*	44 - 6	1	
			101 -		
			102 -		
			103 -		
			104 -		
	25-76001-303	*	44 - 6	1	
			101 -		
			102 -		
			103 -		
			104 -		
	25-76001-305			1	
	25-76002- 1	*	88 - 1	1	
			89 -		
	25-76002-301			1	
	25-76012- 1	*	79 - 48	1	
	25-76013- 1	*	100 - 35	1	
	25-76013- 3	*	100 - 36	1	
	25-76013- 5			1	
	25-76016- 1	*	95 - 56	1	
	25-76018- 1	*	95 - 39	1	
			96 -		
	25-76018- 3	M	96 - 1	1	
	25-76020- 1	*	95 - 91	1	
	25-76020- 3	*	94 - 1	1	
	25-76020- 5	*	95 - 92	1	
	25-76021- 1	*	74 - 55	2	XA-37
	25-76022- 1	M1	101 - 45	2	
			105 -		
	25-76023- 3			1	
	25-76050- 17	M1	84 -	1	XA-319
	25-76050- 27		84 - 9	1	
	25-76050- 29		84 -	1	
	25-76050- 31		84 -	1	
	25-76050- 33		84 -	1	
	25-76050-307		73 - 7	1	
			84 -		
	25-76050-309		73 - 7	1	
			84 -		
	25-76053- 1	M1		1	XA-136
	25-76053- 2	M1		1	
	25-76053- 3	M1		1	
	25-76053- 4	M1		1	
	25-76053- 5	M1		1	
	25-76053- 6	M1		1	
	25-76053-301	M1	84 - 20	1	
	25-76053-302	M1	84 - 38	1	

STOCK	PART NUMBER	SOURCE CODE	FIGURE & INDEX NO.	QTY. PER A/C	MICROFILM INDEX
	25-76054- 1	M1	84 - 30	2	D-224
	25-76054- 2	M1	84 - 44	2	
	25-76054- 3	M1		2	
	25-76054- 4	M1		2	
	25-76055- 1	M1	95 - 68	1	D-225
	25-76055- 3	M1		1	
	25-76056- 1	M1	105 - 26	1	C-226
	25-76056- 3	M1		1	
	25-76056- 5	M1		1	
	25-76057- 1	M1	105 - 13	1	D-226
	25-76057- 3	M1		1	
	25-76057- 5	M1		1	
	25-76057- 7	M1		4	
	25-76057- 9	M1		1	
	25-76057- 11			2	
	25-76057-301		105 - 13	1	
	25-76057-303			1	
	25-76058- 1	M1	105 - 76	1	D-227
	25-76058- 3	M1		1	
	25-76058- 5	M1		2	
	25-76058- 7	M1		1	
	25-76058- 9	M1		1	
	25-76058- 11		105 - 79	1	
	25-76058-301		105 - 76	1	
	25-76059- 3	M	97 - 14	1	D-228
	25-76059-301		95 - 58	1	
			97 -		
	25-76059-303			1	
	25-76060- 1	M1	97 - 18	1	C-227
	25-76060- 3	M1		1	
	25-76060- 5	M	97 - 19	1	
	25-76061-303			1	H-95
	25-76061-305		95 - 59	1	
			97 -		
	25-76061-307		95 - 59	1	
			97 -		
	25-76062- 7	M1	97 - 30	1	D-229
	25-76065- 5	M1		2	H-96
	25-76065- 7	M1		1	
	25-76065- 9	M1		1	
	25-76065- 11	M1		1	
	25-76065- 13	M1		1	
	25-76065- 15	M1	105 - 66	1	
	25-76065- 17	M1		1	
	25-76066- 1	*	101 - 24	1	H-97
			105 -		
	25-76066- 3	M1	105 -	1	
	25-76066-301		101 - 24	1	
			105 -		
	25-76066-303		105 -	1	
	25-76067- 1			1	
	25-76067- 3			1	
	25-76068- 3			1	
	25-76069- 1			1	
	25-76070- 5	M1	100 - 8	1	C-229
	25-76071- 1	A1	101 - 28	1	H-98
			105 -		
	25-76071- 3	A1	105 -	1	
	25-76071- 5	A1	105 -	1	
	25-76071- 7	A1	105 -	1	
	25-76071- 9	M1	105 -	1	
	25-76071- 11	M1	105 -	1	
	25-76071- 13		105 -	1	
	25-76071-301	A1	101 - 28	1	
			105 -		
	25-76071-303	A1	101 - 28	1	
			105 -		
	25-76072- 1	M1	95 - 60	1	H-99
	25-76073- 1	*	101 - 50	1	D-231
			105 -		
	25-76073- 3	M1	105 -	1	
	25-76075- 5	M1	105 - 87	1	C-230
	25-76076- 3	M1	105 - 84	2	
	25-76077- 5	M1	105 - 86	2	
	25-76081- 3	M1	97 - 15	1	
	25-76083- 1		101 - 52	1	C-232
	25-76083- 3	M1		1	
	25-76084- 1		73 - 7	1	
			84 -		
	25-76084- 3		84 - 9	1	
	25-76084- 5		84 -	1	
	25-76084- 7		84 - 9	1	
	25-76084- 9		84 -	1	
	25-76084-301		73 - 7	1	
			84 -		
	25-76085- 1		73 - 7	1	
			84 -		
	25-76085- 3		84 -	1	
	25-76085- 5		84 -	1	
	25-76086- 1	X2	47 - 41	1	D-234
	25-76086-1-3	P1		1	
	25-76086-1-3C	X1		1	
	25-76087- 3			1	
	25-76088- 3	M1	96 - 14	2	
	25-76089- 1	A	96 - 18	1	
	25-76089- 3	P1	96 - 21	1	

STOCK	PART NUMBER	SOURCE CODE	FIGURE & INDEX NO.	QTY. PER A/C	MICROFILM INDEX
R827DA-	25-76089- 5	P1	96 - 19	1	
	25-76089- 7	X1		3	
	25-76089- 9	X1		1	
	25-76089- 11	X1		1	
	25-76089- 13	X1		1	
	25-76089- 15	X1		3	
	25-76091- 3	M1	101 - 47	1	C-233
	25-76092- 1	M1	99 - 29	1	C-234
	25-76092- 3	M1		1	
	25-76094- 1	M1	53 - 76	2	
			98 -		
	25-76095- 1	M1	95 - 28	1	H-101
	25-76095- 3	M1		1	
R82MDA-	25-76096- 3	P1	46 - 65	1	
	25-76097- 1	*	95 -	1	D-236
	25-76098- 3	M1	95 -	3	
	25-76099- 9	M1	53 -	2	
			98 - 9		
	25-76100- 3	M1	53 -	2	
			98 - 10		
	25-76101- 1	*	46 -	1	H-102
	25-76101- 2	*	47 -	1	
	25-76101- 3	M	46 - 17	1	
	25-76101- 4	M	47 - 16	1	
	25-76101- 5	M	47 - 13	1	
	25-76101- 7	M	46 - 14	1	
	25-76102- 3	M	4 -	10	B-220
			46 - 15		
			46 - 16		
			47 - 14		
			47 - 15		
	25-76102- 5	M	46 - 13	2	
	25-76102- 7	M	47 - 12	2	
	25-76102- 9	M	7 -	6	
	25-76102- 13	M1		4	
	25-76103- 3	X1	104 -	2	B-221
			104 -		
	25-76103- 5			1	
R94MDA-	25-76104- 1	P1	104 - 63	2	B-222
			104 - 64		
	25-76104- 3			1	
	25-76105- 9	M1	102 -	1	C-235
	25-76105- 11	M1	102 - 39	1	
	25-76106- 3	M1	101 - 15	1	B-223
	25-76107- 3	M1	101 - 36	1	B-224
	25-76108- 5	M1		4	B-225
	25-76109- 3	M1	99 - 22	1	C-236
	25-76110- 1	A	99 -	1	C-237
	25-76111- 1	P1	102 - 40	1	C-238
	25-76111- 5	X1		1	
	25-76111-1-5C	X1		1	
	25-76112- 1	M1	97 - 12	1	D-237
	25-76112- 3	M1		1	
	25-76112- 5			1	
	25-76112-301			1	
	25-76113-301		95 - 57	1	H-103
			97 -		
	25-76113-307			1	
	25-76113-309			1	
	25-76113-311			1	
	25-76114- 1			1	
	25-76115- 1	M1	95 - 89	1	B-226
	25-76115- 3	M1		1	
	25-76116- 3	M	101 - 36	1	A-96
	25-76117- 3	M1	101 - 36	1	A-97
	25-76118- 1	M	101 - 11	1	B-227
	25-76119- 1	M1	100 - 41	1	C-239
	25-76119- 3	M1		1	
	25-76120- 3	M1		1	C-240
	25-76122- 1	M1		4	C-241
	25-76122- 3	M1		4	
	25-76126- 3	M1	42 - 3	1	
	25-76128- 1		95 - 33	1	
	25-76129- 1	M1	105 - 97	2	
	25-76129- 3	M1		2	
	25-76130- 3	M1	47 - 41	1	
	25-76130- 3C	X1		1	
	25-76131- 1	M1		2	
	25-76131- 3	M1		2	
	25-76131- 5			2	
	25-76131-301		95 - 49	2	
	25-76132- 1	M1	105 -	1	
	25-76132- 3	M1		1	
	25-76132- 5	M1		1	
	25-76132- 7	M1		1	
	25-76132- 9	M1		1	
	25-76132-301	M1	105 - 39	1	
	25-76133- 1	M1	84 - 24	1	
	25-76133- 3	M1		1	
	25-76134- 3			1	
	25-76135- 1	*	95 -	2	
	25-76136- 1	M1	99 - 20	1	
	25-76137- 3	M1		2	
	25-76139- 3		89 - 20	1	
	25-76140- 3			3	
	25-76141- 5			1	

STOCK	PART NUMBER	SOURCE CODE	FIGURE & INDEX NO.	QTY. PER A/C	MICROFILM INDEX
	25-76141-301		99 - 31	1	
	25-76142- 3			1	
	25-76144- 3		95 - 42	1	
	25-76145- 3			1	
	25-76146- 1			1	
	25-76147- 1		101 - 9	1	
	25-76147- 3			1	
	25-76148- 3		103 -	1	
	25-76149- 1		103 - 52	1	
	25-76150- 3			1	
	25-76150- 5			1	
	25-76151- 3			5	
	25-77000- 1	*	106 - 25	1	H-104
			136 -		
	25-77001- 1	*	106 - 26	1	XA-320 XA-321
			137 -		
	25-77001- 3	M1	137 -107	3	
	25-77001- 5	M1	137 -108	5	
	25-77002			1	
	25-77003- 1	A1	136 -	1	H-107
	25-77003-303		136 -	1	
	25-77004- 1	*	108 -	1	D-238
	25-77004- 2	*	109 -	1	
	25-77005- 1	M1	128 -	1	H-108 H-109
	25-77005- 3	M1	128 - 64	2	
	25-77005- 5	M1		2	
	25-77005- 6	M1		2	
	25-77005- 7	M1		4	
	25-77005- 9	M1		1	
	25-77005- 13	M1	128 - 58	1	
	25-77005- 15	M1		2	
	25-77005- 17	M1		2	
	25-77005- 19	M1		2	
	25-77005- 20	M1		2	
	25-77005- 21	M1	128 - 63	1	
	25-77005- 23	M1		1	
	25-77005- 29	M1		2	
	25-77005- 31	M1	128 -	8	
	25-77005- 33	M1	128 - 67	1	
	25-77005- 47	M1	128 -	1	
	25-77005- 57	M1	128 -	1	
	25-77005- 59	M1	128 -	1	
	25-77005- 73	M1	128 - 59	1	
	25-77005- 77		128 -	1	
	25-77005 81			1	
	25-77005- 83			1	
	25-77005- 85			1	
	25-77005- 87			1	
	25-77005- 89			1	
	25-77005- 91			1	
	25-77005- 93		128 -	1	
	25-77005- 95		128 - 60	1	
	25-77005- 97			1	
	25-77005-101		128 -	1	
	25-77006- 1		136 -	1	
	25-77007- 1			1	
	25-77007- 3			1	
	25-77007- 5			1	
	25-77007- 7			1	
	25-77007- 9			1	
	25-77007- 11			1	
	25-77007- 13			1	
	25-77007- 15			1	
	25-77007- 17			1	
	25-77007- 19			1	
	25-77010- 1	*	136 - 3	1	
	25-77011- 1	*	118 - 47	1	
	25-77050- 1	A	136 - 57	1	D-239
R82MDA-	25-77051- 3	P1	136 - 67	1	D-240
R82MDA-	25-77052- 1	P1	136 - 59	1	D-241
	25-77052- 3	X1		1	
	25-77053- 3	M	136 - 66	1	B-229
	25-77054- 3	M1	137 - 17	1	B-230
	25-77054- 4	M1	137 - 18	1	
	25-77054- 6			1	
	25-77058- 1	M1	136 - 47	1	H-110 H-111
	25-77058- 5	M1		1	
	25-77058- 7	M1		1	
	25-77058- 15	M1		1	
	25-77058- 17			1	
	25-77058- 19			2	
	25-77058- 23			1	
	25-77058- 25			2	
	25-77058- 27			1	
	25-77058- 29			1	
	25-77058- 31			1	
	25-77058-301		136 - 47	1	
	25-77059- 5			2	
	25-77060- 5			2	
	25-77065- 3	M	108 -	10	A-98
			108 - 5		
			109 -		
			109 - 5		
	25-77066- 3	M	136 - 1	1	
	25-77067- 5	M		1	B-234
	25-77067- 7	M		1	

STOCK	PART NUMBER	SOURCE CODE	FIGURE & INDEX NO.	QTY. PER A/C	MICROFILM INDEX
	25-77067- 9	M		1	
	25-77067-1007	M		1	
	25-77067-1009	M		1	
	25-77068- 3	M	136 - 4	1	C-243
	25-77070- 3	M	137 - 56	1	C-244
	25-77070- 5	M	137 - 57	1	
	25-77071- 3	M1	136 - 5	1	
	25-77072- 1	M1	136 - 11	1	
	25-77072- 3	M1		1	C-245
	25-77073- 3	M1	108 - 6	4	B-236
			109 - 6		
	25-77074- 3	X1		1	XA-322
	25-77075- 3	M1	128 -	4	B-237
	25-77075- 5		128 - 68	2	
	25-77076- 3	M1	136 -	2	
	25-77076- 5	M1	136 -	4	
	25-77077- 1	*	108 -	20	C-246
			108 -		
			108 -		
			108 -		
			108 -		
			109 -		
			109 -		
			109 -		
			109 -		
			109 -		
	25-77077- 3	M1	108 - 8	20	
			108 -		
			108 -		
			108 -		
			108 -		
			109 - 8		
			109 -		
			109 -		
			109 -		
			109 -		
	25-77077- 5	M1		2	
	25-77077- 7	M1		2	
	25-77077- 9	M1		1	
	25-77077- 11	M1		1	
	25-77079- 1	M1	113 - 16	1	D-246
	25-77079- 3	M1		1	
	25-77079- 5	M1		1	
	25-77079- 7	M1		1	
	25-77080- 3	M1	113 - 20	1	
	25-77081- 3	M1	113 - 23	2	A-99
	25-77082- 3	M1	113 - 21	2	B-240
	25-77083- 3	M1		2	B-241
	25-77084- 3	M1	136 - 56	1	XA-137
	25-77085- 3		137 - 96	1	
	25-77086- 1	M1		4	
	25-77086- 3	M1		7	
	25-77086- 5	M1		4	
	25-77086- 7	M1		7	
	25-77087- 3	M		1	
	25-77087- 5	M		1	
	25-77087- 7	M		1	
	25-77087- 9	M		1	
	25-77088- 3		137 - 96	1	
	25-77090- 3		177 - 56	1	
	25-77090- 5			1	
	25-77090- 9			1	
	25-77090- 11		177 - 56	1	
	25-77090- 13			1	
	25-77090- 17			1	
	25-77090- 19			1	
	25-77090- 21			1	
	25-77090- 23			1	
	25-77090- 29			1	
	25-77090- 31			1	
	25-77090- 33			1	
	25-77090- 35			1	
	25-77090- 39			1	
	25-77090- 41			1	
	25-77090- 43			1	
	25-77091- 3		108 - 5	4	
			109 - 5		
	25-77093- 1		136 -	1	
	25-77093- 3			1	
	25-77093- 5			1	
	25-77093- 7			1	
	25-77094- 3			3	
	25-77095- 3		108 - 75	1	
	25-77096- 1			1	
	25-77096- 3			1	
	25-77098- 1		136 - 9	1	
	25-77098- 3			1	
	25-78000-301	*	138 - 2	1	XA-323 XA-324
			160 -		
	25-78001- 1	*	39 -	1	
	25-78003- 1	*	142 -	2	D-247
	25-78004- 1	*	138 -	1	H-116
	25-78004- 3	*	141 -	1	
	25-78004- 5	*	140 -	1	
	25-78004- 9	M1	141 - 42	1	
	25-78004- 11	M1	140 - 59	1	

STOCK	PART NUMBER	SOURCE CODE	FIGURE & INDEX NO.	QTY. PER A/C	MICROFILM INDEX
	25-78004- 13	M1	138 - 15	1	
	25-78004- 15		138 - 15	1	
	25-78004- 17			1	
	25-78005- 3	M1	142 - 8	2	
	25-78006- 3	M		1	XA-41
	25-78007- 1	*	39 -	1	XA-82
	25-78007- 3	M	39 - 30	1	
	25-78051- 1	A	160 - 24	1	B-242
	25-78052- 3	M	160 - 28	1	B-243
	25-78053- 3	M1	160 - 29	2	A-100
	25-78054- 3	M1	160 - 30	2	A-101
R82MDA-	25-78056- 1	M1	39 - 31	2	XA-83
	25-78056- 3	M1		2	
	25-78056- 5	M1		2	
	25-78060- 3			2	
	25-79000- 2	M1	137 -	1	
	25-79000- 4	M1	137 -	1	
	25-79000- A6		104 -	1	
				1	
	25-79000- A8		104 -	1	
				1	
	25-79000- 10	M1	160 -	1	
	25-79000- 24	M1	102 -	1	
	25-79000- 26	M1	137 -	1	
	25-79000- 29	M1	102 -	1	
	25-79000- 31	M1	104 -	1	
	25-79000- 33	M1	104 -	1	
	25-79000- 40	M	34 - 1	1	
	25-79000- 42	M	34 - 1	1	
	25-79000- 45	M1	104 -	1	
	25-79000- 53	M1	104 -	1	
	25-79000- 59	M1	102 -	1	
	25-79000- 60	M1	102 -	1	
	25-79000- 61	M1	102 -	1	
	25-79000- 64	M1	102 -	1	
	25-79000- 65	M1	102 -	1	
	25-79000- 66	M1	137 -	1	
	25-79000- 67	M1	102 -	1	
	25-79000- 69	M1	104 -	1	
	25-79000- 72	M1	102 -	1	
	25-79000- 74	M1	160 -	1	
	25-79000- 78	M1	104 -	1	
	25-79000- 79	M1	103 -	1	
	25-79000- 84	M1		1	
	25-79000- 85	M1	104 -	1	
	25-79000- 89	M1	104 -	2	
	25-79000- 90	M1	102 -	2	
	25-79000- 91	M1	104 -	4	
	25-79000- 92	M1	104 -	1	
	25-79000- 97	M1	103 -	1	
	25-79000- 98	M1	104 -	1	
	25-79000- 99	M1	68 -	1	
	25-79000-A108		103 -	1	
	25-79000-A115			1	
	25-79000-A119			1	
	25-79000-A121			1	
	25-79000-A124		102 -	1	
	25-79000-A126		104 -	1	
	25-79000-A127		137 -	1	
	25-79000-A129		137 -	1	
	25-79000-A130		160 -	1	
	25-79000-A139		137 -	1	
	25-79000-A141		137 -	1	
	25-79000-A150		137 -	1	
	25-79000-A156		137 -	1	
	25-79000-A159	M1	137 -	1	
	25-79000-A165			1	
	25-79000-A167		96 - 3	1	
	25-79000-A171		34 -	1	
	25-79000-A173		34 -	1	
	25-79000-A187		34 -	1	
	25-79000-A189		34 -	1	
	25-79000-A190		102 -	1	
	25-79000-A191		34 -	1	
	25-79000-A192		104 -	1	
	25-79000-A193		34 -	1	
	25-79000-A195		102 -	1	
	25-79000-A203			1	
	25-79000-A205		13 -	1	
	25-79000-A211			2	
	25-79000-A215		137 -	1	
	25-79000-A224		102 -	1	
	25-79000-A226		104 -	1	
	25-79000-A238		103 -	1	
	25-79000-A239		103 -	1	
	25-79000-A241		103 -	1	
	25-79000-A247		103 -	1	
	25-79000-A263			1	
	25-79000-A267		103 -	1	
	25-79000-A269		34 -	1	
	25-79000-A271		34 -	1	
	25-79000-A273		34 -	2	
	25-79000-A275		34 -	2	
	25-79000-A279		13 -	1	
	25-79000-A281		13 -	1	
	25-79000-A29			2	

STOCK	PART NUMBER	SOURCE CODE	FIGURE & INDEX NO.	QTY. PER A/C	MICROFILM INDEX
	25-79000-A293			1	
	25-79000-A31		104 -	1	
	25-79000-A32		103 -	1	
	25-79000-A33		104 -	1	
	25-79000-A38		193 -	2	
	25-79000-A39		105 -	2	
	25-79000-A43		102 -	1	
	25-79000-A46			2	
	25-79000-A52		104 -	2	
	25-79000-A62		104 -	1	
	25-79000-A79		103 -	1	
	25-79000-A81		102 -	1	
	25-79000-A83		104 -	1	
	25-79000-A84		160 -	1	
	25-79000-A91		49 -	5	
	25-79000-A92			1	
	25-79000-A94		103 -	3	
	25-79000-A97		103 -	1	
	25-79000-B104			1	
	25-79000-B108			1	
	25-79000-B137			1	
	25-79000-B148		137 -	1	
	25-79000-B151			1	
	25-79000-B171			1	
	25-79000-B173			1	
	25-79000-B187		34 -	2	
	25-79000-B189		34 -	2	
	25-79000-B190			1	
	25-79000-B191			1	
	25-79000-B193			1	
	25-79000-B195		102 -	1	
	25-79000-B199		137 -	1	
	25-79000-B20			1	
	25-79000-B201			2	
	25-79000-B205			1	
	25-79000-B223		160 -	1	
	25-79000-B224			1	
	25-79000-B226			1	
	25-79000-B279			1	
	25-79000-B281			1	
	25-79000-B291		104 -	1	
	25-79000-B30		104 -	1	
	25-79000-B31			1	
	25-79000-B33			1	
	25-79000-B37		104 -	1	
	25-79000-B40			1	
	25-79000-B41		102 -	1	
	25-79000-B42			1	
	25-79000-B44		34 -	1	
	25-79000-B46		34 -	1	
	25-79000-B47			1	
	25-79000-B66		137 -	1	
	25-79000-B72		102 -	1	
	25-79000-B79		103 -	1	
	25-79000-B81		102 -	1	
	25-79000-B82		160 -	1	
	25-79000-B88			2	
	25-79000-B94		103 -	1	
	25-79000-C104		102 -	1	
	25-79000-C137		137 -	1	
	25-79000-C14			1	
	25-79000-C141		137 -	1	
	25-79000-C148			1	
	25-79000-C151		136 -	1	
	25-79000-C18			1	
	25-79000-C20		104 -	1	
	25-79000-C201			1	
	25-79000-C21		102 -	1	
	25-79000-C214		137 -	1	
	25-79000-C243		103 -	1	
	25-79000-C259		103 -	1	
	25-79000-C265		103 -	1	
	25-79000-C28		102 -	1	
	25-79000-C30			1	
	25-79000-C301		104 -	1	
	25-79000-C47		102 -	1	
	25-79000-C54			2	
	25-79000-C58		103 -	1	
	25-79000-C72			1	
	25-79000-C76		160 -	1	
	25-79000-C79			1	
	25-79000-C86		34 -	1	
	25-79000-C88		34 -	1	
	25-79000-C94			1	
	25-79000-C96		160 -	1	
	25-79000-D104		102 -	1	
	25-79000-D137		137 -	1	
	25-79000-D14		103 -	1	
	25-79000-D148		137 -	1	
	25-79000-D18		102 -	1	
	25-79000-D20		104 -	1	
	25-79000-D201		34 -	1	
	25-79000-D21			1	
	25-79000-D214		137 -	1	
	25-79000-D220			1	
	25-79000-D23		104 -	1	
	25-79000-D243		103 -	1	
	25-79000-D246		103 -	1	
	25-79000-D259		103 -	1	
	25-79000-D265		103 -	1	
	25-79000-D28		102 -	1	
	25-79000-D47		102 -	1	
	25-79000-D49		104 -	1	
	25-79000-D54		34 -	1	
	25-79000-D58		103 -	1	
	25-79000-D72		102 -	1	
	25-79000-D86		34 -	1	
	25-79000-D88		34 -	1	
	25-79000-F18		102 -	1	
	25-79000-F199		137 -	1	
	25-79000-F21			1	
	25-79000-F220		137 -	1	
	25-79000-F23			1	
	25-79000-F28		102 -	1	
	25-79000-F49		104 -	1	
	25-79000-F54		34 -	1	
	25-79000-F56			2	
	25-79000-G18		102 -	1	
	25-79000-G220		137 -	1	
	25-79000-G28			1	
	25-79000-G49			1	
	25-79000-G56		34 -	1	
	25-79000-G80		137 -	1	
	25-79000-H216		137 -	1	
	25-79000-H56		34 -	1	
	25-79000-H80		137 -	1	
	25-79000-J216		137 -	1	
	25-79000-K216		137 -	1	
	25-79000-101	M1	103 -	1	
	25-79000-102			1	
	25-79000-104	M1	102 -	1	
	25-79000-105	M1	104 -	1	
	25-79000-106	M1	104 -	1	
	25-79000-109	M1	104 -	1	
	25-79000-111	M1	103 -	1	
	25-79000-112			1	
	25-79000-113		87 -	2	
	25-79000-114			1	
	25-79000-115	M1	56 - 16	2	
	25-79000-116		104 -	1	
	25-79000-117	M1	89 -	1	
	25-79000-119	M1	89 -	2	
	25-79000-121	M1	104 -	1	
	25-79000-122			1	
	25-79000-123	M1	137 -	1	
	25-79000-125	M1	137 -	1	
	25-79000-126	M1	104 -	1	
	25-79000-127	M1	137 -	1	
	25-79000-129	M1	137 -	1	
	25-79000-134		137 -	1	
	25-79000-135	M1	137 -	1	
	25-79000-136	M1	137 -	1	
	25-79000-138		137 -	1	
	25-79000-140	M1	104 -	2	
	25-79000-142	M1	104 -	2	
	25-79000-144			2	
	25-79000-145	M1	137 -	1	
	25-79000-148	M1		1	
	25-79000-152		178 -	1	
	25-79000-153	M1	193 -	2	
	25-79000-154		178 -	1	
	25-79000-155	M1	193 -	2	
	25-79000-156		137 -	2	
	25-79000-157	M1	137 -	1	
	25-79000-160		177 -	1	
	25-79000-162		177 -	3	
	25-79000-163	M1	137 -	1	
	25-79000-164			1	
	25-79000-165	M1	13 -	1	
	25-79000-166			2	
	25-79000-168		177 -	1	
	25-79000-170		177 -	1	
	25-79000-171	M1	34 -	1	
	25-79000-172		104 -	1	
	25-79000-173	M1	34 -	1	
	25-79000-174		42 -	1	
	25-79000-176		103 -	1	
	25-79000-178			1	
	25-79000-180			1	
	25-79000-182		42 -	1	
	25-79000-191	M1	34 -	1	
	25-79000-193	M1	34 -	1	
	25-79000-194		34 - 27	1	
	25-79000-196		42 -	1	
	25-79000-198		42 -	1	
	25-79000-200		103 -	1	
	25-79000-202		103 -	1	
	25-79000-203	M1	13 -	1	
	25-79000-205	M1	13 -	1	
	25-79000-207	M1	13 -	2	
	25-79000-209	M1	13 -	1	
	25-79000-211	M1	7 -	1	

STOCK	PART NUMBER	SOURCE CODE	FIGURE & INDEX NO.	QTY. PER A/C	MICROFILM INDEX
	25-79000-213	M1	7 -	1	
	25-79000-215	M1	137 -	1	
	25-79000-217	M1	39 -	1	
	25-79000-218	M1	39 -	1	
	25-79000-224	M1	102 -	1	
	25-79000-226	M1	104 -	1	
	25-79000-227	M1	102 -	1	
	25-79000-229	M1	160 -	1	
	25-79000-230	M1	103 -	2	
	25-79000-232	M1	103 -	2	
	25-79000-235	M1	142 -	2	
	25-79000-238	M1	103 -	1	
	25-79000-246	M1	103 -	2	
	25-79000-251	M1	103 -	1	
	25-79000-252	M1	104 -	2	
	25-79000-254		42 -	1	
	25-79000-256		42 -	1	
	25-79000-257	M1	103 -	1	
	25-79000-258		103 -	2	
	25-79000-261	M1	103 -	1	
	25-79000-263	M1	102 -	1	
	25-79000-267	M1	103 -	1	
	25-79000-269	M1	34 -	1	
	25-79000-271	M1	34 -	1	
	25-79000-273	M1	34 -	1	
	25-79000-275	M1	34 -	1	
	25-79000-286		103 -	3	
	25-79000-287	M1	104 -	1	
	25-79000-289	M1	104 -	1	
	25-79000-293	M1	102 -	1	
	25-79000-297	M1	104 -	1	
	25-79000-299	M1	104 -	1	
	25-79000-303	M1	137 -	1	
	25-79000-305	M1	137 -	1	
	25-79000-307	M1	137 -	1	
	25-79000A127			1	
	25-79000A129			1	
	25-79000A150			1	
	25-79000A153			1	
	25-79000A155			1	
	25-79000A192			1	
	25-79000A215			1	
	25-79000A38			1	
	25-79000B141			1	
	25-79000B150			1	
	25-79000B199			1	
	25-79000B214			1	
	25-79000B238			1	
	25-79000B259			1	
	25-79000B265			1	
	25-79000B267			1	
	25-79000C199			1	
	25-79000C259			1	
	25-79000C265			1	
	25-79000D214			1	
	25-79000D216			1	
	25-79000D259			1	
	25-79000D265			1	
	25-79000F199			1	
	25-79000F214			1	
	25-79000F220			1	
	25-79000G214			1	
	25-79000G220			1	
	25-79000K216			2	
	25-79000L216			1	
	25-80000- 1	*	44 - 4	1	H-117
			73 -	1	
	25-80001- 1	*	73 - 8	1	H-118
			74 -	1	
	25-80002- 1	*	73 - 9	1	H-119
			79 -	1	
	25-80002-301	*	73 - 9	1	
			79 -	1	
	25-80003- 1	*	73 - 38	1	D-248
			93 -	1	
	25-80006- 1	A	65 - 28	1	C-248
	25-80052- 5	M	65 - 36	1	B-245
R82MDA-	25-80053- 3	P1	65 - 30	1	
	25-80053- 3C	X1		1	
R82MDA-	25-80054- 3	P1	93 - 1	1	B-246
R82MDA-	25-80055- 3	P1	93 - 3	1	B-247
R82MDA-	25-80055- 5	P1	89 - 19	1	
	25-80056- 1		73 -	1	
	25-80057- 1		73 - 20	1	
	25-80057- 3			1	
	25-80057- 5			1	
	25-80057- 7			1	
	25-80059- 3		73 - 17	1	
	25-80061- 3		59 - 13	1	
	25-80062- 1		59 - 15	1	
	25-80062- 3			1	
	25-80063- 1		46 -148	1	
	25-80063-1-3			1	
	25-80063-1-3C			1	
	25-80064- 3		59 - 10	1	
	25-80064- 4		59 - 11	1	
	25-80065- 3		59 - 17	1	
	25-80071- 3		46 -147	2	
	25-80072- 3		46 -142	2	
	25-80073- 1			1	
	25-80073- 3			1	
	25-80077- 1	*	73 -	1	D-250
R82MDA-	25-80078- 3	P1	73 - 14	1	
	25-80078- 3C	X1		1	
	25-81001- 1	M1	74 - 1	1	D-251
	25-81001- 3	M1		1	
	25-81002- 1	M1	74 - 3	1	D-252
	25-81002- 3	M1		1	
	25-81005- 1	A1	74 - 6	1	C-251 D-255
	25-81005- 3	M1	74 -	1	
	25-81005- 5	M1	74 -	1	
	25-81005- 7		74 - 19	1	
	25-81005- 9	M1	74 -	1	
	25-81005- 11	M1	74 - 18	1	
	25-81005- 15	M1	74 - 16	1	
	25-81006- 1		74 - 5	1	
			76 -		
	25-81006- 3		76 -	1	
	25-81006- 5		76 -	1	
	25-81006- 7		76 - 17	1	
	25-81006- 9		76 - 14	1	
	25-81006- 11		76 - 15	1	
	25-81006- 13			1	
	25-81007- 15	M1		1	C-252 D-256
	25-81007- 33		77 -	1	
	25-81007- 35		77 -	1	
	25-81007- 37		77 -	1	
	25-81007- 39		77 - 15	2	
	25-81007- 41		77 - 13	1	
	25-81007-303		74 - 23	2	
			77 -		
	25-81008- 1	A1	74 - 25	1	C-253 D-258
			78 -		
	25-81008- 3	P1	78 -	1	
	25-81008- 5	M1	78 -	1	
	25-81008- 7	M1	78 -	1	
	25-81008- 9	M1		1	
	25-81008- 11			1	
	25-81008- 13			1	
	25-81008- 17			1	
	25-81008- 19	M1	78 - 11	1	
	25-81008- 21	P1	78 - 12	1	
	25-81008- 23	M1		1	
	25-81008- 25	M1		2	
	25-81008- 27		78 - 17	1	
	25-81008- 31	M1	78 -	1	
	25-81008- 33	M1	78 -	1	
	25-81008- 35	M1	78 - 18	2	
	25-81008- 37	M1		1	
	25-81008- 39	M1	78 -	1	
	25-81008- 41		78 - 15	2	
	25-81008- 43		78 - 14	2	
	25-81008- 45			1	
	25-81008- 47			1	
	25-81008- 49		78 - 19	1	
	25-81008- 51		78 - 20	1	
	25-81008-301	A	74 - 25	1	
			78 -		
	25-81010- 1	M1	79 - 1	1	D-259
	25-81010- 3	M1		1	
	25-81011- 1	A	79 - 33	1	C-254 D-260 C-261
	25-81011- 3	M1	79 -	1	
	25-81011- 5	M1	79 -	1	
	25-81011- 7	M1	79 -	1	
R82MDA-	25-81011- 9	P1	79 - 42	1	
	25-81011- 13	M1	79 -	1	
	25-81011- 15	M1		1	
	25-81012- 1	M1	79 - 3	1	D-262
	25-81012- 3	M1		1	
	25-81013- 1	A	79 -	1	D-263 D-264
			80 -		
	25-81013- 3	M1	80 -	1	
	25-81013- 5	M1	80 -	1	
	25-81013- 7	M1	80 -	1	
	25-81013- 9	M1	80 -	1	
R82MDA-	25-81013- 11	P1	80 - 17	1	
	25-81013- 13	M1	80 - 15	1	
	25-81013- 17			1	
	25-81014- 1			1	
	25-81015- 1	A	79 -	1	C-255 D-265 D-266
	25-81015- 3	M1	79 -	1	
	25-81015- 5	M1	79 -	1	
	25-81015- 7	M1	79 -	1	
R82MDA-	25-81015- 9	P1	79 - 18	1	
	25-81015- 11	M1		1	
	25-81015- 15	M1	79 -	1	
	25-81015- 17	M1		1	
	25-81015-301	A1	79 - 9	1	
	25-81018- 1	A1	79 -	1	C-256 D-267 H-124

STOCK	PART NUMBER	SOURCE CODE	FIGURE & INDEX NO.	QTY. PER A/C	MICROFILM INDEX
	25-81018- 3	M1	79 -	1	
	25-81018- 5	P1	79 - 30	1	
	25-81018- 7	M1	79 -	1	
	25-81018- 11	M1	79 -	1	
	25-81018- 13	M1		1	
	25-81020- 1	M1	79 -	1	C-257
	25-81020- 5	M1	79 -	1	
	25-81025- 1			1	
	25-81025- 3			1	
	25-81025- 5			1	
	25-81025- 7			1	
	25-81025- 9			1	
	25-81025- 11			1	
	25-81025- 13			1	
	25-81026- 15			1	
	25-81026- 17			1	
	25-81026- 19			1	
	25-81026- 21			1	
	25-81026- 23			1	
	25-81026- 25			1	
	25-81026-301			1	
	25-81027- 1	A1	74 -	1	C-259 D-270 H-125
	25-81027- 3	M1	74 -	1	
	25-81027- 7	M1	74 - 34	1	
	25-81027- 11	M1		1	
	25-81027- 13	M1	74 -	1	
	25-81027- 15	A	74 -	1	
	25-81027- 17	M1	74 -	1	
	25-81027- 19	P1	74 - 43	1	
	25-81027- 21	A	74 -	1	
	25-81027-301	A	74 - 33	1	
	25-81028- 1	A	79 - 23	1	
	25-81028- 3	M1	79 -	1	
R82MDA-	25-81028- 5	P	79 - 30	1	
	25-81028- 7	M1	79 -	1	
	25-81028- 9	M1		1	
	25-81028- 11	M1	79 -	1	
	25-81050- 3			2	
R82MDA-	25-81054- 3	P1	79 - 44	1	D-271
	25-81054- 3C	X1		1	
	25-81055- 3	M1	79 - 38	1	B-248
	25-81060- 3	M1	79 - 40	1	B-249
	25-81061- 1	M1	74 - 62	1	C-260
	25-81061- 5	M1		1	
	25-81062- 1	M1	77 - 9	1	A-103
	25-81062- 2	M1	77 - 10	1	
	25-81062- 3	M1		1	
	25-81062- 4	M1		1	
	25-81063- 1	A	74 - 45	1	D-272 THRU D-274
	25-81063- 3	M1	74 -	1	
	25-81063- 5	M	74 -	1	
	25-81063- 7	M1	74 -	1	
	25-81063- 9	P1	74 - 60	1	
	25-81063- 11	M1		1	
	25-81063- 13	M1		1	
R82MDA-	25-81064- 3	P1	74 - 15	1	B-250
	25-81065- 1	A	74 - 11	1	C-261
R82MDA-	25-81066- 3	P1	74 - 12	1	B-251
	25-81067- 3		79 -	1	XA-84
	25-81068- 1			2	
	25-81068- 3			2	
	25-81069- 3	M1	74 - 62	1	
	25-81069- 5			2	
	25-81069-301			1	
	25-81070- 1	A	79 - 49	1	B-252 D-275 D-276
	25-81070- 3	M1	79 -	1	
	25-81070- 5	M1	79 -	1	
	25-81070- 7	M1	79 -	1	
	25-81070- 9		79 -	1	
	25-81070- 13	M1		1	
	25-81070- 15		79 -	1	
	25-81070-301		79 - 49	1	
	25-81071- 1			1	
	25-81071- 3			1	
	25-81071- 5			1	
	25-81071- 7			1	
	25-81071- 9			1	
	25-81071- 11			1	
	25-81071- 13			1	
	25-81071- 15			1	
R82MDA-	25-81084- 5	P1	84 - 3	1	XA-325
R82MDA-	25-81084- 6	P1	84 - 4	1	
	25-81084- 7	X1		2	
	25-81084- 8	X1		2	
	25-81084-303	A	73 - 5 84 -	1	
	25-81084-304	A	73 - 6 84 -	1	
	25-81085- 1	M1	73 - 2	1	D-277
	25-81085- 2	M1	73 - 3	1	
	25-81085- 3	M1		1	
	25-81085- 4	M1		1	
	25-81087- 3		76 - 9	1	
	25-81087- 3C			1	
	25-81088- 3		75 - 24	1	
	25-81090- 3			4	
	25-81091- 1			1	
	25-81091- 3			1	
	25-81091- 5			1	
	25-81091- 7			1	
	25-81091- 9			1	
	25-81091- 11			1	
	25-81092- 1			1	
	25-81092- 3			1	
	25-81092- 5			1	
	25-81092- 7			1	
	25-81092- 9			1	
	25-81092- 11			1	
	25-81093- 1			1	
	25-81093- 3			1	
	25-81093- 5			1	
	25-81093- 7			1	
	25-81093- 9			1	
	25-81093- 11			1	
	25-81095- 1			1	
	25-82000- 1	*	73 - 1 87 -	1	
	25-82001- 1	P1	87 - 8 88 -	1	
	25-82001- 5		89 - 5	1	
	25-82002- 1	A1	88 -	1	
	25-82002- 3	M1		1	
	25-82002- 5	M1		1	
	25-82002- 7			1	
	25-82002- 9	M1		1	
	25-82002- 11	M1		1	
	25-82002- 13	M1		1	
	25-82002- 15	M1		2	
	25-82002- 19	M1		1	
	25-82002- 27	M1		1	
	25-82002- 29	M1		1	
	25-82002- 30	M1		1	
	25-82002- 31	M1		1	
	25-82002- 33	M1		1	
	25-82002- 35	M1		1	
	25-82002- 36	M1		1	
	25-82002- 37	M1		1	
	25-82002- 39	M1		1	
	25-82002- 41	M1		1	
	25-82002- 43	M1		1	
	25-82002- 47	M1		2	
	25-82002- 53	M1		2	
	25-82002- 55	M1		1	
	25-82002- 57	M1		1	
	25-82002- 61			3	
	25-82002- 63			1	
	25-82002- 65			1	
	25-82002- 67			1	
	25-82002- 69			1	
	25-82002- 71			2	
	25-82002- 73			1	
	25-82002- 74			1	
	25-82002- 75			1	
	25-82002- 77			1	
	25-82002- 79			1	
	25-82002- 81			1	
	25-82002-301			1	
	25-82003- 1	A1	91 - 60 92 -	1	
	25-82004- 1	A1	88 - 32 91 -	1	H-127
	25-82006- 1	A1	87 - 9	1	
	25-82006- 3			1	
	25-82006- 5	M1		1	
	25-82006- 7	M1		1	
	25-82006- 9	M1		1	
	25-82006- 11	M1		4	
	25-82006- 13			1	
	25-82006- 15	M1		2	
	25-82006- 17	M1		1	
	25-82006- 18	M1		1	
	25-82006- 21	M1		1	
	25-82006- 23	M1		1	
	25-82006- 25	M1		1	
	25-82006- 27	M1	87 -	1	
	25-82006- 29	M1		1	
	25-82006- 31	M1		2	
	25-82006- 33	M1		1	
	25-82006- 37	M1		2	
	25-82006- 39	M1		2	
	25-82006- 41			1	
	25-82006-301			1	
	25-82008- 1	M1	92 -	1	XA-326
	25-82008- 5	M1		1	
	25-82008- 9	M1	91 -	2	
	25-82008- 11	M1		1	
	25-82008- 13	M1		1	
	25-82008- 14	M1		1	
	25-82008- 15	M1	91 -	2	

STOCK	PART NUMBER	SOURCE CODE	FIGURE & INDEX NO.	QTY. PER A/C	MICROFILM INDEX
	25-82008- 17	M1		1	
	25-82008- 19	M1		1	
	25-82008- 21	M1		1	
	25-82008- 23	M1		1	
	25-82008- 25	M1		1	
	25-82008- 27	M1		1	
	25-82008- 29	M1		1	
	25-82008- 30	M1		1	
	25-82008- 31	M1		1	
	25-82008- 33	M1		1	
	25-82008- 35	M1		1	
	25-82008- 37	M1		1	
	25-82009- 1	M1	91 - 26	1	H-129
	25-82009- 11	M1		1	
	25-82009- 13	M1		2	
	25-82009- 19	M1	91 - 50	1	
	25-82009- 20	M1	91 - 51	1	
	25-82009- 23	M1	91 - 28	1	
	25-82009- 24	M1	91 - 29	1	
	25-82009- 25	M1		1	
	25-82009- 26	M1		1	
	25-82009- 27	M1		1	
	25-82009- 29			2	
	25-82009- 30			2	
	25-82009- 31		91 - 30	1	
	25-82009- 33			1	
	25-82009-301			1	
	25-82010- 1	A1	91 - 31	1	
	25-82010-301			1	
	25-82011- 1	*	88 - 10	1	
			90 -		
	25-82012- 1	*	88 - 11	1	
			90 -		
	25-82013- 1	A1	89 - 3	1	
	25-82013-301			1	
	25-82016- 1	M1	92 - 9	1	
	25-82016- 3	M1		1	
	25-82016- 5	M1	92 - 11	1	
	25-82017- 3	M1	92 - 12	3	
	25-82018- 3	M1	92 - 21	1	
	25-82019- 1	A1	92 - 16	1	
	25-82021- 3	X1	92 -	1	C-262
	25-82023- 3	M1	90 - 1	1	
	25-82023- 7		90 - 4	1	
	25-82023- 9		59 - 1	1	
	25-82023- 11			1	
	25-82025- 3F	X1		2	
R82MDA-	25-82026- 3	P1	88 - 18	1	
R82MDA-	25-82026- 5	P1	88 - 18	1	
	25-82027- 5		89 - 12	1	
	25-82029- 3	M1	87 - 24	2	
	25-82030- 3F	X1		2	
	25-82031- 5	M1	88 - 28	1	XA-10
	25-82031- 6	M1	88 - 28	1	
R82MDA-	25-82036- 1	P	92 - 1	1	
	25-82036- 3	M		1	
	25-82036- 5	M		1	
	25-82036- 7	M		1	
	25-82037- 1	M1	92 - 3	1	
	25-82037- 3	M1		1	
	25-82040- 3	M1	87 - 22	1	
	25-82041- 3	M1	91 - 56	2	
	25-82041- 5	M1	91 - 57	11	
			91 - 57		
	25-82041- 7	M1	91 - 58	2	
	25-82042- 3	M1	91 - 59	16	
	25-82043- 3	M1	88 - 22	1	
	25-82044- 5		88 - 23	1	B-253
	25-82045- 3	M1	88 - 25	1	B-254
	25-82047- 3	M1	88 - 31	1	
	25-82049- 3	P1	91 - 45	1	B-255
	25-82049- 3C			1	
	25-82050- 3F	X1		2	
	25-82051- 3	X2	91 - 43	1	
	25-82052- 3	X2	91 - 44	1	
	25-82053- 3		45 -	1	
	25-82054- 3	M1	91 - 49	1	
	25-82054- 5			1	
	25-82056- 3	M		1	
	25-82057- 1	A1	88 - 14	1	
	25-82057- 3	A1	88 - 15	1	
	25-82057- 5	M1	88 - 21	2	
	25-82060- 3F	X1		1	H-130
R82MDA-	25-82061- 3	P1	91 - 22	1	C-263
	25-82061- 3C	X1		1	
	25-82062- 3	M1		1	
	25-82062- 4	M1		1	
	25-82063- 1	A1	91 - 54	1	
	25-82063- 3	A1	91 - 55	1	
	25-82063-301			1	
	25-82063-303			1	
	25-82064- 3	M1		1	XA-327
	25-82064- 5	M1		1	
	25-82064- 7			1	
	25-82064- 9			1	
	25-82065- 3	M1	88 - 12	2	
	25-82065- 5	M1	88 - 13	2	
	25-82066- 3	M1	91 - 47	1	B-258
	25-82067- 1	M1	91 -	1	
	25-82067- 3	M1		1	
	25-82068- 1	M	91 -	1	
	25-82068- 3	M	91 - 14	1	
	25-82068- 5	M	91 - 18	1	
	25-82068- 7	M	91 - 13	1	
	25-82069- 1	M1	91 -	1	
	25-82069- 3	M1		1	
	25-82074- 3	P1	91 - 24	1	C-265
	25-82074- 3C	X1		2	
	25-82074- 5		91 - 24	1	
	25-82075- 3	M1	87 - 27	1	
	25-82075- 5	M1	87 - 28	1	
	25-82076- 1	M1	87 - 25	2	
	25-82076- 3	M1		2	
	25-82077- 3	M1	91 - 1	1	XA-328
	25-82079- 3	M1	87 - 4	1	B-259
	25-82082- 3	M1	87 - 6	1	B-260
	25-82083- 3	M1	45 - 35	2	
	25-82084- 1	X2	91 - 52	1	
	25-82084- 3	X1		1	
	25-82085- 3	M1	91 - 46	1	
	25-82086- 3	M1	90 - 7	1	B-261
R82MDA-	25-82088- 3	P1	87 - 18	1	
	25-82088- 3C	X1		1	
R82MDA-	25-82091- 1	P1	89 - 15	1	C-266
	25-82091- 3	X1		2	
	25-82091- 3C	X1		2	
	25-82092- 1	A	89 -	1	
	25-82092- 3	M	89 -	1	C-267
	25-82092- 5	M	89 - 16	1	
	25-82093- 3	M1	90 - 19	1	XA-43
	25-82094- 1	M1	87 - 16	2	
	25-82094- 5	M1		1	
	25-82094- 7			2	
	25-82095- 3	M1	87 -	2	
	25-82096- 3	M1	87 -	1	
			87 -		
	25-82097- 1	X2	91 - 32	1	
	25-82098- 3	X1	91 - 34	1	
	25-82098- 3C	X1		1	
	25-82099- 3	X1	91 - 38	1	
	25-82099- 3C	X1		1	
	25-82100- 3	X1	91 - 41	1	
	25-82101- 3	X1	91 - 42	1	
	25-82101- 3C	X1		1	
	25-82102- 5	M1	91 - 36	1	
	25-82104- 3	X2	90 - 15	2	
	25-82104- 3F	X1		2	
	25-82105- 3	M	88 - 31	1	
	25-82107- 3		91 - 48	1	
	25-82107- 5		91 -	1	
	25-82108- 1		88 - 6	2	
	25-82108- 3			4	
	25-82108- 5			2	
	25-82109- 3			2	
	25-82109- 3C			2	
	25-82110- 3			1	
	25-82111- 1			1	
	25-82112- 1			1	
	25-82113- 1			1	
	25-82115			1	
	25-82117- 3			1	
	25-82117- 4			1	
	25-82117-3-4C			2	
	25-82118- 3			1	
	25-82118- 5			1	
	25-82119- 1			1	
	25-82119- 3			1	
	25-82119- 4			1	
	25-82119- 5			1	
	25-82119- 7			1	
	25-82119- 8			1	
	25-82119- 9			2	
	25-82119- 11			1	
	25-82119- 13			1	
	25-82119- 15			1	
	25-82119- 16			1	
	25-82119- 17			1	
	25-82119- 18			1	
	25-82120- 1			1	
	25-82120- 3			1	
	25-82121- 3			1	
	25-82122- 3			1	
	25-82123- 3			1	
	25-82124- 3			1	
	25-82125- 3			1	
	25-82126- 6			1	
	25-82128- 3			1	
	25-82128- 3F			1	
	25-82129- 1			1	
	25-82129- 3			1	
	25-82129- 5			1	
	25-82129- 7			1	

STOCK	PART NUMBER	SOURCE CODE	FIGURE & INDEX NO.	QTY. PER A/C	MICROFILM INDEX
	25-82130- 3			1	
	25-82131- 3			1	
	25-82132- 3			1	
	25-82133- 3			1	
	25-82133- 3C			1	
	25-82134- 3			1	
	25-82135- 1			1	
	25-82135- 2			1	
	25-82135- 3			1	
	25-82135- 4			1	
	25-82136- 3			1	
	25-82137- 3			1	
	25-82138- 3			1	
	25-82138- 3C			1	
	25-82139- 3			1	
	25-82140- 1			1	
	25-82140- 3			1	
	25-82141- 1			1	
	25-82141- 3			1	
	25-82141- 5			1	
	25-82142- 1			1	
	25-82142-1-3			1	
	25-82142-1-3P			1	
	25-82143- 3			1	
	25-82144- 3			1	
	25-82145- 1			1	
	25-82145- 3			1	
	25-82145- 5			1	
	25-82146- 3			1	
	25-82147- 3			1	
	25-82148- 3			1	
	25-82149- 3			1	
	25-82149- 5			1	
	25-82150- 1			1	
	25-82150- 3			1	
	25-82150- 5			1	
	25-82150- 7			1	
	25-82151- 3			1	
	25-82152- 1			1	
	25-82227- 15			1	
	25-83000- 1	*	44 - 10 65 -	1	H-132
	25-83000-301	*	44 - 10 65 -	1	
	25-83001- 1	*	66 - 9	1	
	25-83002- 1	*	66 - 8	1	
	25-83002- 3	*	65 - 15	1	
	25-83006- 3	X2	47 - 95	1	
	25-83006- 3C	X1		1	H-133 H-134
	25-83007- 3	X2	47 - 96	1	H-135 H-136
	25-83007- 3C	X1		1	
	25-83008- 1	A1	65 - 26 66 -	1	H-137
	25-83011- 1	A1	65 - 39	1	D-278
	25-83011-301	A	65 - 39	1	
	25-83015- 1	*	94 - 57	1	
	25-83016- 1	*	73 - 52 94 -	1	H-139
	25-83017- 1	M1		1	XA-329 THRU XA-332
	25-83017- 3	M1		1	
	25-83017- 5	M1		1	
	25-83017- 7	M1		1	
	25-83017- 9	M1		1	
	25-83017- 13	M1		1	
	25-83017- 15	M1		1	
	25-83017- 17	M1		1	
	25-83017- 19	M1		1	
	25-83017- 21	M1		1	
	25-83017- 23	M1		1	
	25-83017- 27	M1		1	
	25-83017- 29	M1		1	
	25-83017- 31	M1		1	
	25-83017- 33	M1		1	
	25-83017- 35	M1		1	
	25-83017- 37	M1		1	
	25-83017- 41	M1		1	
	25-83017- 43	M1		1	
	25-83017- 59	M1		1	
	25-83017- 60	M1		1	
	25-83017- 61	M1		1	
	25-83017- 63	M1		1	
	25-83017- 64	M1		1	
	25-83017- 65	M1		1	
	25-83017- 66	M1		1	
	25-83017- 67	M1		1	
	25-83017- 68	M1		1	
	25-83017- 69	M1		1	
	25-83017- 70	M1		1	
	25-83017- 71	M1		1	
	25-83017- 72	M1		1	
	25-83017- 73	M1		1	
	25-83017- 75	M1		1	
	25-83017- 77	M1		1	
	25-83017- 79	M1		1	
	25-83017- 80	M1		1	
	25-83017- 81	M1		1	
	25-83017- 82	M1		1	
	25-83017- 83	M1		1	
	25-83017- 85	M1		1	
	25-83017- 87	M1		1	
	25-83017- 89	M1		1	
	25-83017- 91	M1		1	
	25-83017- 93	M1		1	
	25-83017- 95	M1		1	
	25-83017- 97	M1		1	
	25-83017- 99	M1		1	
	25-83017-101	M1		1	
	25-83017-103	M1		1	
	25-83017-105	M1		1	
	25-83017-107	M1		1	
	25-83017-109	M1		1	
	25-83017-111	M1		1	
	25-83017-113	M1		1	
	25-83017-119	M1		1	
	25-83017-121	M1		1	
	25-83017-123	M1		1	
	25-83017-125	M1		1	
	25-83017-127	M1		1	
	25-83017-129	M1		1	
	25-83017-131	M1		1	
	25-83017-133	M1		1	
	25-83017-135	M1		1	
	25-83017-137	M1		1	
	25-83017-139	M1		1	
	25-83017-141	M1		1	
	25-83017-143	M1		1	
	25-83017-145	M1		1	
	25-83017-147	M1		1	
	25-83017-149	M1		1	
	25-83017-151	M1		1	
	25-83017-159	M1		1	
	25-83017-161	M1		1	
	25-83017-163	M1		1	
	25-83017-165	M1		1	
	25-83017-167	M1		1	
	25-83017-169	M1		1	
	25-83017-173	M1		1	
	25-83017-175	M1		1	
	25-83017-177	M1		1	
	25-83017-181	M1		1	
	25-83017-183	M1		1	
	25-83017-185	M1		1	
	25-83017-187	M1		1	
	25-83017-189	M1		1	
	25-83017-191	M1		1	
	25-83017-193	M1		1	
	25-83017-195	M1		1	
	25-83017-197	M1		1	
	25-83017-199	M1		1	
	25-83017-201	M1		1	
	25-83017-203	M1		1	
	25-83017-205	M1		1	
	25-83017-207	M1		1	
	25-83017-209	M1		1	
	25-83017-211	M1		1	
	25-83017-213	M1		1	
	25-83017-215			1	
	25-83017-216			1	
	25-83017-217			1	
	25-83017-218			1	
	25-83017-219			1	
	25-83017-220			1	
	25-83017-221			1	
	25-83017-223			1	
	25-83017-225			1	
	25-83017-226			1	
	25-83017-227			1	
	25-83017-228			1	
	25-83017-229			1	
	25-83017-230			1	
	25-83017-231			1	
	25-83017-301	M1		1	
	25-83019- 1	A1	94 - 26	1	H-144
	25-83021- 1	*	65 - 70	1	
	25-83021- 3	*	125 - 29	1	
	25-83022- 1	*	65 - 58	1	
	25-83024- 1	*	94 - 53	1	
R82MDA-	25-83052- 3	P1	65 - 22	1	C-268
R82MDA-	25-83053- 3	P1	65 - 24	1	C-269
R82MDA-	25-83054- 5	P1	65 - 7	1	C-270
	25-83054- 7	P1	65 - 8	1	
R83MDA-	25-83056- 3	P1	66 - 6	1	D-279
	25-83056- 3C	X1		1	
	25-83057- 3	M	100 - 9	1	C-272
	25-83059- 3	M1	65 - 69	1	C-273
	25-83059- 5	M1	65 - 72	1	
	25-83059- 7	M1	65 - 74	1	
	25-83059- 9	M1	65 - 75	1	
	25-83059- 11	M	65 - 66	1	
	25-83059- 13	M	65 - 64	1	
	25-83059- 15	M	65 - 38	1	

STOCK	PART NUMBER	SOURCE CODE	FIGURE & INDEX NO.	QTY. PER A/C	MICROFILM INDEX
	25-83059- 17	M	65 - 59	1	
	25-83059- 19	M	65 - 56	1	
	25-83059- 21	M	65 - 53	1	
	25-83059- 23	M	65 - 3	1	
	25-83059- 25	M	65 - 5	1	
	25-83059- 27	M	65 - 60	1	
	25-83059- 29	M	65 - 62	1	
	25-83059- 31			1	
	25-83059- 33			1	
	25-83059-1003	M1		1	
	25-83059-1005	M1		1	
	25-83059-1007	M1		1	
	25-83059-1011	M		1	
	25-83059-1013	M		1	
	25-83059-1017	M		1	
	25-83059-1019	M		1	
	25-83059-1021	M		1	
	25-83059-1023	M		1	
	25-83059-1025	M		1	
	25-83059-1027	M		1	
	25-83059-1029	M		1	
	25-83059-1031			1	
	25-83059-1033			1	
R82MDA-	25-83061- 3	P1	108 -123	1	
	25-83061- 3C	X1		1	
R83MDA-	25-83062- 3	P1	66 - 4	1	C-274
R82MDA-	25-83070- 3	P1	94 - 51	1	H-146
	25-83070- 3C	X1		1	
R82MDA-	25-83071- 3	P1	66 - 1	1	C-277
	25-83071- 3C	X1		1	
	25-83072- 3	M1	100 - 11	1	C-278
	25-83073- 3	M1	65 - 41	1	C-279
	25-83076- 3	M1	94 - 39	1	B-266
	25-83077- 3	M1	94 - 50	1	D-281
	25-83078- 3	M1	94 - 41	1	B-267
	25-83079- 3	M	94 - 35	1	B-268
R82MDA-	25-83080- 7	P1	94 - 44	1	C-280
	25-83080- 7C	X1		1	
	25-83081- 3	M1	94 - 46	1	C-281
	25-83082- 3	M1	94 - 36	1	B-269
	25-83084- 3	M1	94 - 30	1	B-271
	25-83087- 1		140 - 36	1	XA-333
	25-83087- 2		140 - 37	1	
	25-83087- 3C	X1		1	
R82MDA-	25-83087- 5	P1	94 - 55	1	
	25-83088- 3	M	94 - 52	1	C-282
	25-83089- 1	M1	94 - 12	1	C-283
	25-83089- 3	M1		1	
	25-83090- 3	M1	94 - 18	1	C-284
R82MDA-	25-83091- 3	P1	94 - 4	1	C-285
	25-83093- 3	M1	94 - 32	1	B-273
	25-83094- 1	X2	46 -105	1	D-282
	25-83094- 3	X1		1	
	25-83094- 3C	X1		1	
	25-83095- 1	M1	94 - 8	1	
	25-83095- 7	M1		2	
	25-83095- 9	M1		1	
	25-83095- 11	M1		2	
	25-83095- 13	M1		1	
	25-83095- 15	M1		1	
	25-83095- 16	M1		1	
	25-83095- 17	M1		2	
R82MDA-	25-83096- 3	P1	65 - 1	2	C-287
			94 - 6		
R82MDA-	25-83097- 3	P1	65 - 47	1	C-288
	25-83097- 3C	X1		1	
	25-83098- 3	M1	65 -	4	
			68 - 49		
	25-83099- 1	M1	65 - 54	4	B-274
			68 - 47		
	25-83100- 1	M1	65 - 17	1	B-275
	25-83101- 3	M1	65 -	1	B-276
	25-83102- 3	M1		1	B-277
	25-83103- 3	M1	108 -124	1	B-278
R82MDA-	25-83104- 3	X2	46 - 82	1	C-289
	25-83104- 3C	X1		1	
	25-83105- 3	M	94 - 53	1	C-290
R82MDA-	25-83106- 3	P1	65 - 50	1	
	25-83106- 3C	X1		1	
	25-83107- 1	M1	65 - 13	1	
	25-83107- 3	M1		1	
	25-83107- 5	M1		1	
	25-83107- 7	M1		1	
	25-83108- 3	M1	65 - 11	1	
R82MDA-	25-84003- 1	P1	138 - 29	1	D-283
	25-84003- 3	X1		1	
	25-84004- 3F	X1		1	D-284
	25-84005- 1	M1	86 - 41	1	H-150
	25-84005- 3	M1		1	
	25-84005- 5	M1		1	
	25-84005- 7	M1		1	
	25-84005- 9	M1		1	
	25-84005- 11	M1		1	
	25-84005- 13	M1		1	
	25-84005- 15	M1		1	
	25-84006- 1	*	138 -	1	

STOCK	PART NUMBER	SOURCE CODE	FIGURE & INDEX NO.	QTY. PER A/C	MICROFILM INDEX
	25-84009- 1	A	156 -	1	D-285
R82MDA-	25-84009- 3	P1	156 - 7	1	
	25-84010- 1	*	138 - 7	1	H-152
			156 -		
	25-84011- 1	X1	156 - 13	1	D-286
	25-84011- 2	X1	156 - 14	1	
	25-84011- 3	X1		1	
	25-84011- 4	X1		1	
	25-84012- 3	X1		1	H-164
	25-84012- 5		156 - 11	1	
	25-84013- 3	M1	156 - 12	2	C-291
	25-84014- 3	P1	156 - 4	2	
	25-84015- 1	*	138 - 8	1	
			156 -		
	25-84016- 3F	X1		1	D-287
	25-84016- 4F	X1		1	
	25-84017- 3F	X1		1	H-155
	25-84018- 3	M1	156 - 16	4	B-280
R82MDA-	25-84019- 3	P	156 - 3	2	
	25-84020- 3	M1	156 - 22	1	
	25-84030- 1	A1	73 - 39	1	H-156
			86 -		
	25-84051- 3	M1	138 - 26	1	
	25-84052- 3	M1	138 - 22	1	
	25-84053- 3	M1	156 - 34	1	B-284
	25-84054- 3	P1	156 - 24	1	C-293
	25-84055- 3	M1	138 - 25	2	A-106
	25-84056- 3		86 - 43	1	
	25-84057- 3		156 - 8	1	
	25-85000- 1	*	44 - 16	1	H-157
			67 -		
	25-85003- 1	*		1	
	25-85051- 3	M1	67 - 3	2	C-294
	25-85051- 5	M1	67 - 4	1	
	25-85051- 7	M1	67 - 6	2	
	25-85051- 9	M1	67 - 7	1	
	25-85051- 11	M1	67 - 8	2	
	25-85051- 13	M1	67 - 10	1	
	25-85051- 15	M1	67 - 11	1	
	25-85051- 17	M1	67 - 13	1	
	25-85051- 19	M1	67 - 16	1	
	25-85051- 27	M1		1	
	25-85051- 31	*		1	
	25-85051- 35	*		1	
	25-85051- 37			1	
	25-85051- 39			1	
	25-85051- 41			1	
	25-85051- 43			1	
	25-85051- 45			1	
	25-85051- 47			1	
	25-85051-1003	M1		2	
	25-85051-1005	M1		1	
	25-85051-1007	M1		2	
	25-85051-1009	M1		1	
	25-85051-1011	M1		2	
	25-85051-1013	M1		1	
	25-85051-1015	M1		1	
	25-85051-1017	M1		1	
	25-85051-1019	M1		1	
	25-85051-1027	M1		1	
	25-85051-1031	*		1	
	25-85051-1035	*		1	
	25-85051-1037			1	
	25-85051-1039			1	
	25-85051-1041			1	
	25-85051-1043			1	
	25-85051-1045			1	
	25-85051-1047			1	
R82MDA-	25-85052- 3	P1	67 - 14	2	B-285
	25-85053- 3	M1		1	
	25-87000	*		1	
	25-87002- 1	*	73 - 48	1	
			83 -		
	25-87004	*		1	
R82MDA-	25-87005- 1	P1	95 - 2	1	D-288
	25-87006- 1	M1	46 - 38	4	
			47 - 36		
	25-87006- 3	X1		4	H-158
	25-87006- 5	X1		4	
	25-87006- 7	X1		8	
	25-87006- 9	X1		4	
	25-87006- 11	M1	46 - 40	4	
			47 - 37		
R82MDA-	25-87007- 1	P1	39 - 8	1	
	25-87008- 1	*	95 - 79	1	H-160
			100 -		
	25-87008- 3	A1	100 -	1	
	25-87009- 1	*	95 - 76	1	H-161
			100 -		
	25-87010- 1	*	95 - 38	1	XB-1
			99 -		
	25-87011- 1		95 - 36	1	H-163
			99 -		
	25-87011-301		95 - 36	1	
			99 -		
	25-87011-303			1	

STOCK	PART NUMBER	SOURCE CODE	FIGURE & INDEX NO.	QTY. PER A/C	MICROFILM INDEX
	25-87012- 1	X2	100 - 29	1	
	25-87012- 3	X1		1	
	25-87012- 5	X1		1	
	25-87012- 7	X1		1	
	25-87012- 11	X1		1	
	25-87012- 13	X1		1	
	25-87012- 15	X1		1	
	25-87012- 16	X1		1	
	25-87013- 1	X2	100 - 45	1	H-165
	25-87013- 3	X1		1	
	25-87013- 5	X1		1	
	25-87013- 7	X1		1	
	25-87013- 9	X1		1	
	25-87013- 11	X1		1	
	25-87013- 13	X1		1	
	25-87013- 15	X1		1	
	25-87014- 1	X2	99 - 15	1	H-166
	25-87014- 3	X1		1	
	25-87014- 5	X1		1	
	25-87014- 7	X1		1	
	25-87014- 9	X1		1	
	25-87014- 11	X1		1	
	25-87014- 13	X1		1	
	25-87014- 15	X1		1	
	25-87015- 1	X2	99 - 35	1	
	25-87015- 3	X1		1	
	25-87015- 5	X1		1	
	25-87015- 7	X1		1	
	25-87015- 9	X1		1	
	25-87015- 11	X1		1	
	25-87015- 13	X1		1	
	25-87015- 15	X1		1	
	25-87015-301		99 - 35	1	
	25-87016- 1	A	99 - 1	1	B-286
	25-87017- 1	A	98 - 42	1	B-287
	25-87020- 1	A	100 -	1	B-288
	25-87021- 1	A	100 -	1	B-289
	25-87022- 1	A	95 - 82	1	B-290
	25-87027- 1	*	41 - 24	1	H-214
			42 -		
	25-87027-301	*	41 - 24	1	
			42 -		
	25-87027-303	*	41 - 24	1	
			42 -		
	25-87028- 1	*	95 - 34	1	H-168
			98 -		
	25-87028- 3	M1	98 -	1	
	25-87028- 7	M1	98 - 40	1	
	25-87028- 9	A	98 - 16	1	
	25-87028- 11	M1	98 -	1	
	25-87028- 13	M1	98 -	1	
	25-87028- 15	M1	98 -	1	
	25-87028- 17			1	
	25-87028-301	*	95 - 34	1	
			98 -		
	25-87059- 3	M1	95 - 4	2	B-292
	25-87060- 3	M1	95 - 5	1	B-293
	25-87072- 1	M1		1	D-291
	25-87072- 3	M1		1	
	25-87072- 5	M1		1	
	25-87072- 7	M1		1	
	25-87073- 1	M1		1	C-296
	25-87073- 3	M1		2	
	25-87073- 5	M1		1	
	25-87073- 7	M1		1	
	25-87075- 3	M1		4	
	25-87076- 3	M1	46 - 42	4	
			47 - 39		
	25-87077- 3		100 - 25	1	B-296
	25-87078- 1		100 -	1	B-297
	25-87079- 3		100 - 26	1	B-298
	25-87080- 1		95 - 10	1	H-172
	25-87080- 3C			1	
	25-87080- 5			1	
	25-87082- 3	M1	46 -	4	
			47 -		
R82MDA-	25-87083- 3		95 - 83	16	C-297
			98 - 43		
			99 - 4		
			100 - 18		
	25-87083- 3C			16	
R82MDA-	25-87084- 3		100 - 14	4	C-298
	25-87084- 3C			4	
	25-87086- 3		95 -	3	B-300
R82MDA-	25-87089- 1	P1	46 -138	1	D-292
	25-87089- 3	X1		1	
	25-87089- 3C	X1		1	
	25-87090- 3		95 - 9	1	B-301
	25-87091- 3		95 - 8	1	B-302
	25-87092- 5		95 - 6	1	B-303
	25-87093- 3	X1	41 -	3	H-215
	25-87094- 1		98 - 21	1	D-293
	25-87094- 3		98 - 28	1	
	25-87094- 5		98 - 25	1	
	25-87094- 7		98 - 32	1	
	25-87094- 9		98 - 26	1	
	25-87094- 11		98 - 33	1	
	25-87094- 13		98 - 26	1	
	25-87094- 15		98 - 25	1	
	25-87094- 17		98 - 21	1	
	25-87095- 3	M1	39 - 32	1	B-304
	25-87096- 3	M1		1	B-305
R82MDA-	25-87097- 3	P1		1	D-294
	25-87097- 3C	X1		1	
	25-87098- 1	A		1	D-295
R82MDA-	25-87099- 3	P1	83 - 32	1	H-173
	25-87099- 3C	X1		1	
	25-87100- 3		98 - 46	4	B-306
	25-87101- 3	M1	46 -	2	XA-44
	25-87103- 1		42 - 1	1	
	25-87103- 3			1	
	25-87103- 5			1	
	25-87104- 1		42 -	1	
	25-87105- 1		42 - 44	1	
	25-87105- 3			1	
	25-87105- 5			1	
	25-87105- 6			1	
	25-87105- 7			2	
	25-87105- 9			1	
	25-87105- 11			1	
	25-87105- 13			1	
	25-87105- 15			1	
	25-87105- 17			1	
	25-87106- 3		95 -	1	
	25-87106- 5		95 -	1	
	25-87106- 7		73 - 43	1	
	25-87106- 8		73 - 44	1	
	25-87106- 9		83 - 29	1	
	25-87106- 11		74 - 64	1	
	25-87106- 13		95 -	1	
	25-87106- 15		95 - 13	1	
	25-87106- 17			1	
	25-87106- 19			1	
	25-87106- 21			1	
	25-87106- 22			1	
	25-87106- 23			1	
	25-87106- 25			1	
	25-87106- 27			1	
	25-87106- 29			1	
	25-87106- 31			1	
	25-87106- 33			1	
	25-87106- 35			1	
	25-87106- 37			1	
	25-87106- 39			1	
	25-87106- 41		81 - 79	1	
	25-87106- 43			1	
	25-87106- 45			1	
	25-87106- 47			4	
	25-87106- 49			4	
	25-89003- 3	M1		2	
	25-89004- 3	M1		2	
	25-89005- 3	M1		2	
	25-89006- 3	M1		2	
	25-89008- 3		95 -	1	B-308
	25-89009- 3	M1	73 - 12	1	B-309
	25-89015- 13	M1		1	D-300
	25-89015- 17		97 - 28	1	
	25-89015- 21		97 - 11	1	
	25-89015- 23		97 - 28	1	
	25-89015- 25			1	
	25-89015- 27			1	
	25-89016- 17		97 - 29	1	D-301
	25-89016- 19		97 - 17	1	
	25-89016- 21			1	
	25-89017- 3			1	
	25-89017- 5			1	
	25-89017- 7			1	
	25-89017- 9			1	
	25-89017- 11			1	
	25-89017- 13			1	
	25-89017- 15			1	
	25-89017- 17			1	
	25-89017- 19	M1		1	
	25-89017- 21	M1		1	
	25-89017- 23	M1		1	
	25-89017- 25	M1	136 - 61	1	
	25-89017- 27	M1	82 -	1	
	25-89017- 29	M1		1	
	25-89017- 31	M1		1	
	25-89017- 33	M1		1	
	25-89017- 35	M1		2	
	25-89017- 37	M1		2	
	25-89017- 39	M1		2	
	25-89017- 41	M1		2	
	25-89017- 43	M1		2	
	25-89017- 45	M1		1	
	25-89017- 47	M1		2	
	25-89017- 51	M1	136 -	1	
	25-89017- 55			1	
	25-89017- 57	M1		1	
	25-89017- 59	M1		2	
	25-89017- 61			1	

STOCK	PART NUMBER	SOURCE CODE	FIGURE & INDEX NO.	QTY. PER A/C	MICROFILM INDEX
	25-89017- 63			1	
	25-89017- 67	M1		1	
	25-89017- 69			1	
	25-89017- 71			3	
	25-89017- 77	M1	97 -	1	
	25-89017- 79	M1		2	
	25-89017- 83			1	
	25-89017- 85			1	
	25-89017- 87			1	
	25-89017- 89			1	
	25-89017- 91			1	
	25-89017- 93	M1	97 -	1	
	25-89017- 95	M1	97 -	1	
	25-89017- 97			1	
	25-89017-105	M1	97 -	2	
	25-89017-107	M1		1	
	25-89017-109	M1		1	
	25-89017-111	M1		1	
	25-89017-113	M1		1	
	25-89017-115	M1		1	
	25-89017-117	M1	97 -	1	
	25-89017-119			1	
	25-89017-121	M1		1	
	25-89017-123	M1		1	
	25-89017-129	M1		1	
	25-89017-131			1	
	25-89017-133			1	
	25-89017-135			1	
	25-89017-137			1	
	25-89017-139			1	
	25-89017-141			1	
	25-89017-143			2	
	25-89017-145			1	
	25-89017-147			1	
	25-89017-149			1	
	25-89017-165			2	
	25-89017-167			2	
	25-89017-169			1	
	25-89017-171			1	
	25-89017-173			1	
	25-89017-175			1	
	25-89017-177			1	
	25-89017-179			1	
	25-89017-181			2	
	25-89017-183			1	
	25-89017-185			1	
	25-89018- 5	M1	31 -	2	XA-45
	25-89018- 7	M1	31 -	2	
	25-89019- 5			2	B-311
	25-89020- 7			3	A-114
	25-89020- 9			3	
	25-89021- 7		73 -	1	XA-46
	25-89022- 3	M1	105 - 25	1	A-107
	25-89023- 3	M1	105 - 12	1	B-313
	25-89024- 7		105 - 75	1	XA-47
	25-89025- 3			4	A-115
	25-89026- 3	M1	30 -	5	
	25-89027- 13			4	XA-11
	25-89028- 9		157 - 30	2	
	25-89030- 3	M1	92 - 26	1	
	25-89032- 3			2	B-316
	25-89034- 7		145 -	1	
	25-89034- 9		145 -	1	
	25-89035- 5	M1		1	B-318
	25-89036- 5	M1		1	B-319
	25-89037- 5	M1	136 - 33	1	B-320
	25-89039- 3	M1		1	B-321
	25-89041- 3	M1		1	
	25-89042- 3	M1		1	B-322
	25-89044- 3	M1		2	B-323
	25-89046- 3	M1		4	B-324
	25-89048- 3	M1	92 - 27	1	B-325
	25-89049- 3	M1		1	B-326
	25-89050- 5	M1	128 -	1	B-327
	25-89050- 7	M1		1	
	25-89050- 9	M1		1	
	25-89052- 5		185 -107	1	B-328
	25-89053- 3	M1	97 -	1	B-329
	25-89055- 3		84 - 19	1	
	25-89055- 5		84 - 29	1	
	25-89056- 3	M1		7	B-330
	25-89056- 5	M1		6	
	25-89056- 7	M1		26	
	25-89056- 9	M1		4	
	25-89056- 11	M1		6	
	25-89057- 3	M1		2	XA-49
	25-89057- 5	M1		2	
	25-89058- 5	M1	114 - 19	1	B-331
	25-89059- 7		114 - 20	1	C-301
	25-89059- 9		114 - 20	1	
	25-89060- 3	M1	114 - 39	1	B-332
	25-89062- 3		5 -	2	XA-50
	25-89063- 3			1	XA-51
	25-89064- 3	M1	92 -	2	B-334
	25-89065- 3	M1	92 -	2	B-335
	25-89066- 3	M1		10	B-336

STOCK	PART NUMBER	SOURCE CODE	FIGURE & INDEX NO.	QTY. PER A/C	MICROFILM INDEX
	25-89067- 9		84 - 19	2	XA-140
	25-89067- 11		84 - 29	1	
	25-89067- 13		84 - 29	1	
	25-89068- 3	M1	84 - 37	2	XA-141
	25-89068- 7		84 - 43	2	
	25-89070- 7			1	
	25-89071- 3	M1		1	
	25-89071- 7			1	
	25-89072- 9			1	
	25-89073- 9			1	
	25-89074- 5		105 -	1	
	25-89074- 53			1	
	25-89076- 3			1	
	25-89080- 3			1	
	25-89080- 5			1	
	25-89081- 3			1	
	25-89082- 3			1	
	25-89082- 5			2	
	25-89083- 3			1	
	25-89083- 5			1	
	25-89083- 9			1	
	25-89083- 11			1	
	25-89083- 13			1	
	25-89083- 15			1	
	25-89083- 17			2	
	25-89083- 19			4	
	25-89083- 23			1	
	25-89083- 25			1	
	25-89083- 27			1	
	25-89083- 29			1	
	25-89083- 33			1	
	25-89083- 35			1	
	25-89083- 37			1	
	25-89083- 39			1	
	25-89083- 43			4	
	25-89083- 45			1	
	25-89083- 47			1	
	25-89083- 49			3	
	25-89083- 53			1	
	25-89083- 55			1	
	25-89083- 57			1	
	25-89083- 61			1	
	25-89083- 63			1	
	25-89083- 65			1	
	25-89083- 67			2	
	25-89083- 69			1	
	25-89083- 71			5	
	25-89083- 73			2	
	25-89083- 75			1	
	25-89083- 77			1	
	25-89083- 81			2	
	25-89083- 83			1	
	25-89083- 85			1	
	25-89083- 87			1	
	25-89083- 89			1	
	25-89083- 91			1	
	25-89083- 95			1	
	25-89083- 97			1	
	25-89085- 3			1	
	25-89087- 3			1	
	25-89087- 5			1	
	25-89088- 3			2	
	25-89089- 3			1	
	25-89090- 3			1	
	25-89091- 3			1	
	25-89093- 3		19 - 32	2	
	25-89093- 4		19 - 32	2	
	25-89094- 3			1	
	25-89095- 3			1	
	25-90005			1	
	25-90008			1	
	25-90027			1	
	25-90800- 5			1	
	25-90800- 7			1	
	25-91001- 3			1	
	25-91002- 1			1	
	25-91002- 3			1	
	25-91003- 1		165 - 2	1	
			174 -		
	25-91003- 2		165 - 3	1	
			174 -		
	25-91003-301		165 - 2	1	
			174 -		
	25-91003-302		165 - 3	1	
			174 -		
	25-91004- 1		174 -	1	
	25-91004- 2		174 -	1	
	25-91004-301		174 -	1	
	25-91004-302		174 -	1	
	25-91005- 1		174 - 8	1	
			175 -		
	25-91005- 2		174 - 8	1	
			175 -		
	25-91005- 3		175 - 11	1	
	25-91005- 4		175 - 11	1	
	25-91005- 5		175 - 12	1	

STOCK	PART NUMBER	SOURCE CODE	FIGURE & INDEX NO.	QTY. PER A/C	MICROFILM INDEX
	25-91005- 6		175 - 12	1	
	25-91005- 9			1	
	25-91005- 10			1	
	25-91005- 13			2	
	25-91005- 15			1	
	25-91005- 16			1	
	25-91005- 25			1	
	25-91005- 27			1	
	25-91005- 28			1	
	25-91005- 29			1	
	25-91005- 30			1	
	25-91005- 35		175 - 14	1	
	25-91005- 36		175 - 14	1	
	25-91005- 37			1	
	25-91005- 38			1	
	25-91005- 39			2	
	25-91005- 41			1	
	25-91005- 42			1	
	25-91005- 43			1	
	25-91005- 44			1	
	25-91005- 45			1	
	25-91005- 46			1	
	25-91005- 47			1	
	25-91005- 48			1	
	25-91005- 49		175 - 13	4	
	25-91005- 51			2	
	25-91005- 52			2	
	25-91005- 53			2	
	25-91005- 55			2	
	25-91005- 57			1	
	25-91005- 58			1	
	25-91005- 61			1	
	25-91005- 62			1	
	25-91005- 63			1	
	25-91005- 64			1	
	25-91005- 65			1	
	25-91005- 66			1	
	25-91005- 67			1	
	25-91005- 68			1	
	25-91005- 69			1	
	25-91005- 70			1	
	25-91005- 71			1	
	25-91005- 72			1	
	25-91005- 73			1	
	25-91005- 74			1	
	25-91005- 75		175 - 1	1	
	25-91005- 76		175 - 1	1	
	25-91005- 77			1	
	25-91005- 78			1	
	25-91005- 79			1	
	25-91005- 80			1	
	25-91005- 81			1	
	25-91005- 82			1	
	25-91005- 83			1	
	25-91005- 84			1	
	25-91005- 85			1	
	25-91005- 86			1	
	25-91005- 87			1	
	25-91005- 88			1	
	25-91005- 89			1	
	25-91005- 90			1	
	25-91005- 91			1	
	25-91005- 92			1	
	25-91005- 93			1	
	25-91005- 94			1	
	25-91005- 95			1	
	25-91005- 96			1	
	25-91005- 97			1	
	25-91005- 98			1	
	25-91005- 99			1	
	25-91005-100			1	
	25-91005-301		174 - 8 175 -	1	
	25-91005-302		174 - 8 175 -	1	
	25-91006- 1			1	
	25-91006- 3			1	
	25-91006- 5			1	
	25-91006- 7			1	
	25-91006- 9			1	
	25-91006- 11			1	
	25-91006- 13			1	
	25-91006- 15			1	
	25-91006- 17			1	
	25-91006- 19			1	
	25-91006- 21			1	
	25-91006- 23			1	
	25-91006- 25			1	
	25-91006- 27			1	
	25-91006- 29			1	
	25-91006- 31			1	
	25-91006- 33			1	
	25-91006- 35			2	
	25-91006- 37			1	
	25-91006- 39			1	
	25-91006- 41			1	

STOCK	PART NUMBER	SOURCE CODE	FIGURE & INDEX NO.	QTY. PER A/C	MICROFILM INDEX
	25-91006- 43			1	
	25-91006- 45			1	
	25-91006- 47			1	
	25-91006- 49			1	
	25-91006- 51			1	
	25-91006- 53			1	
	25-91006- 55			1	
	25-91006- 57			1	
	25-91006- 59			1	
	25-91006- 61			1	
	25-91006- 63			1	
	25-91006- 65			1	
	25-91006- 67			1	
	25-91006- 69			1	
	25-91006- 70			1	
	25-91006- 71			2	
	25-91006- 73			2	
	25-91006- 75			2	
	25-91006- 77			1	
	25-91006- 79			1	
	25-91006- 81			1	
	25-91007- 1		174 - 12 176 -	1	
	25-91007- 2		174 - 12 176 -	1	
	25-91007- 3			1	
	25-91007- 4			1	
	25-91007- 5			1	
	25-91007- 6			1	
	25-91007- 7			1	
	25-91007- 8			1	
	25-91007- 9		176 - 2	1	
	25-91007- 10		176 - 2	1	
	25-91007- 11		176 - 1	1	
	25-91007- 12		176 - 1	1	
	25-91007- 13			1	
	25-91007- 14			1	
	25-91007- 15			1	
	25-91007- 16			1	
	25-91007- 17			1	
	25-91007- 18			1	
	25-91007- 19			1	
	25-91007- 20			1	
	25-91007- 21		176 - 8	2	
	25-91007- 23		176 - 9	2	
	25-91007- 25			1	
	25-91007- 26			1	
	25-91007- 27			1	
	25-91007- 28			1	
	25-91007- 29		176 - 6	2	
	25-91007- 31		176 - 7	1	
	25-91007- 32		176 - 7	1	
	25-91007- 33			2	
	25-91007- 35			2	
	25-91007- 37		176 - 10	1	
	25-91007-301		174 - 12 176 -	1	
	25-91007-302		174 - 12 176 -	1	
	25-91008- 1		174 - 15 177 -	1	
	25-91008- 2		174 - 15 177 -	1	
	25-91008-301		174 - 15 177 -	1	
	25-91008-302		174 - 15 177 -	1	
	25-91009- 1			1	
	25-91012- 1			1	
	25-91012- 3			1	
	25-91012- 5			1	
	25-91012- 7			1	
	25-91012- 9			1	
	25-91012- 11			1	
	25-91012- 13			1	
	25-91012- 15			1	
	25-91012- 17			1	
	25-91012- 19			1	
	25-91012- 21			2	
	25-91012- 23			1	
	25-91012- 25			1	
	25-91012- 27			1	
	25-91012- 29			2	
	25-91012- 31			1	
	25-91012- 33			1	
	25-91012- 35			1	
	25-91012- 37			1	
	25-91012- 38			1	
	25-91012- 39			1	
	25-91012- 41			1	
	25-91012- 43			1	
	25-91012- 45			1	
	25-91012- 47			1	
	25-91012- 49			1	
	25-91012- 51			1	
	25-91012- 53			1	

STOCK	PART NUMBER	SOURCE CODE	FIGURE & INDEX NO.	QTY. PER A/C	MICROFILM INDEX
	25-91012- 55			1	
	25-91012- 57			1	
	25-91012- 59			1	
	25-91012- 61			1	
	25-91012- 63			1	
	25-91012- 65			1	
	25-91012- 67			1	
	25-91012- 69			1	
	25-91012- 71			1	
	25-91012- 73			1	
	25-91012- 75			1	
	25-91012- 77			1	
	25-91012- 79			1	
	25-91012- 81			1	
	25-91012- 83			2	
	25-91012- 85			1	
	25-91012- 87			1	
	25-91012- 89			1	
	25-91012- 91			1	
	25-91012- 93			1	
	25-91012- 95			1	
	25-91012- 97			1	
	25-91012- 99			1	
	25-91012-101			1	
	25-91012-103			1	
	25-91012-105			2	
	25-91012-107			1	
	25-91012-109			2	
	25-91012-111			1	
	25-91012-113			1	
	25-91017- 5			1	
	25-91018- 3			2	
	25-91020- 3			1	
	25-91020- 36			1	
	25-91025- 3			8	
	25-91026- 3			8	
	25-91031- 3			1	
	25-91032- 3			1	
	25-91042- 3		175 - 9	5	
	25-91043- 3		175 - 7	5	
	25-91051- 1			2	
	25-91051- 3			2	
	25-91052- 1			2	
	25-91052- 3			2	
	25-91052- 5			2	
	25-91053- 3		177 - 8	1	
	25-91053- 4		177 - 8	1	
	25-91053- 5		177 - 12	1	
	25-91053- 6		177 - 12	1	
	25-91056- 3			12	
	25-91060- 1			1	
	25-91060- 3			1	
	25-91061- 3			1	
	25-91061- 5			1	
	25-91061-3-5F			2	
	25-91062- 1			1	
	25-91062- 3			1	
	25-91062- 5			2	
	25-91063- 3			4	
	25-91064- 3			1	
	25-91065- 3			3	
	25-91066- 3			1	
	25-91067- 3			1	
	25-91068- 1			1	
	25-91072- 3		174 - 4	24	
	25-91072- 5			2	
	25-91072- 7			1	
	25-91074- 3		177 - 46	3	
	25-91074- 3F			3	
	25-91076- 1		177 - 58	1	
	25-91076- 2		177 - 58	1	
	25-91076- 3			1	
	25-91076- 4			1	
	25-91076- 5			2	
	25-91081- 3		177 - 33	8	
	25-91081- 3F			8	
	25-91082- 3		177 - 36	8	
	25-91086- 1		177 -	1	
	25-91086- 2		177 -	1	
	25-91086- 3		177 - 27	1	
	25-91086- 4		177 - 27	1	
	25-91086- 5		177 - 30	1	
	25-91086- 6		177 - 30	1	
	25-91086- 7		177 - 31	1	
	25-91086- 8		177 - 31	1	
	25-91086- 9			1	
	25-91086- 10			1	
	25-91086- 11		177 - 32	1	
	25-91086- 12		177 - 32	1	
	25-91087- 1		177 -	1	
	25-91087- 2		177 -	1	
	25-91087- 3		177 - 4	1	
	25-91087- 4		177 - 4	1	
	25-91087- 5		177 - 18	1	
	25-91087- 6		177 - 18	1	
	25-91087- 7		177 - 20	1	
	25-91087- 8		177 - 20	1	
	25-91087- 9		177 - 16	1	
	25-91087- 10		177 - 16	1	
	25-91087- 11		177 - 7	1	
	25-91087- 12		177 - 7	1	
	25-91087- 13		177 - 10	1	
	25-91087- 14		177 - 10	1	
	25-91087- 15		177 - 19	1	
	25-91087- 16		177 - 19	1	
	25-91087- 17		177 - 22	2	
	25-91087- 19		177 - 9	1	
	25-91087- 20		177 - 9	1	
	25-91087- 21		177 - 17	2	
	25-91087- 23		177 - 21	2	
	25-91087- 25			1	
	25-91087- 26			1	
	25-91087- 27			1	
	25-91087- 28			1	
	25-91087- 29			1	
	25-91087- 30			1	
	25-91087- 31		177 - 23	1	
	25-91087- 32		177 - 23	1	
	25-91087- 33		177 - 24	1	
	25-91087- 34		177 - 24	1	
	25-91087- 35		177 - 25	1	
	25-91087- 36			1	
	25-91087- 37			2	
	25-91088- 1			1	
	25-91088- 2			2	
	25-91088- 3			1	
	25-91088- 4			2	
	25-91097- 2		176 - 16	1	
	25-91097- 3		176 - 16	1	
	25-91097- 4			1	
	25-91097-3-4F			2	
	25-91098- 3		176 - 22	1	
	25-91098- 3F			1	
	25-91098- 4		176 - 22	1	
	25-91098- 4F			1	
	25-91102- 1			1	
	25-91102- 2			1	
	25-91102-1-3			1	
	25-91102-1-3P			1	
	25-91102-2-4			1	
	25-91102-2-4P			1	
	25-91103- 3		176 - 11	1	
	25-91103- 4		176 - 11	1	
	25-91104- 1		176 - 14	1	
	25-91104- 2		176 - 14	1	
	25-91104-1-3			1	
	25-91104-1-3C			1	
	25-91104-2-4			1	
	25-91104-2-4C			1	
	25-91105- 3		176 - 15	1	
	25-91105- 3C			1	
	25-91105- 4		176 - 15	1	
	25-91105- 4C			1	
	25-91106- 1			1	
	25-91106- 2			1	
	25-91106-1-3			1	
	25-91106-1-3P			1	
	25-91106-2-4			1	
	25-91106-2-4P			1	
	25-91113- 1			1	
	25-91114- 1			1	
	25-91114- 3			1	
	25-91117- 1			1	
	25-91117- 3			1	
	25-91118- 3		177 - 48	2	
	25-91119- 3		177 - 42	2	
	25-91120- 3			1	
	25-91121- 3			1	
	25-91122- 1		177 - 37	1	
	25-91122- 2		177 - 37	1	
	25-91122- 3			2	
	25-91123- 1			1	
	25-91123- 3			1	
	25-91124- 1			2	
	25-91124- 3			2	
	25-91125- 1			2	
	25-91125- 3			2	
	25-91126- 1			1	
	25-91126- 2			1	
	25-91126- 3			1	
	25-91126- 4			1	
	25-91127- 1		177 - 39	1	
	25-91127- 2		177 - 39	1	
	25-91127- 3			1	
	25-91127- 4			1	
	25-91128- 1			1	
	25-91128- 2			1	
	25-91128- 3			1	
	25-91128- 4			1	
	25-91129- 3			1	
	25-91129- 7			1	
	25-91129-2-6P			1	

STOCK	PART NUMBER	SOURCE CODE	FIGURE & INDEX NO.	QTY. PER A/C	MICROFILM INDEX
	25-91130- 1		177 - 26	2	
	25-91130- 3			1	
	25-91130- 5			1	
	25-91130- 7			1	
	25-91131- 1			4	
	25-91131-1-3			4	
	25-91131-1-3F			4	
	25-91132- 3		177 - 45	2	
	25-91133- 1			1	
	25-91133- 2			1	
	25-91133- 3			1	
	25-91133- 4			1	
	25-91134- 1			1	
	25-91134- 2			1	
	25-91134-1-3			1	
	25-91134-1-3P			1	
	25-91134-2-4			1	
	25-91134-2-4P			1	
	25-95001	*		1	
	25-95002	*		1	
	25-95003	*		1	
	25-95004			1	
	25-95005	*		1	
	25-95006	*		1	
	25-95007	*		1	
	25-95008	*		1	
	25-95009	*		1	
	25-95010	*		1	
	25-95011	*		1	
	25-95012	*		1	
	25-95013	*		1	
	25-95014	*		1	
	25-95015	*		1	
	25-95016	*		1	
	25-95017	*		1	
	25-95018	*		1	
	25-95019	*		1	
	25-95020	*		1	
	25-95021	*		1	
	25-95022	*		1	
	25-95023	*		1	
	25-95024	*		1	
	25-95025	*		1	
	25-95026	*		1	
	25-95027	*		1	
	25-95028	*		1	
	25-95029	*		1	
	25-95030	*		1	
	25-95031	*		1	
	25-95032	*		1	
	25-95033	*		1	
	25-95034	*		1	
	25-95035	*		1	
	25-95036	*		1	
	25-95037	*		1	
	25-95038	*		1	
	25-95039	*		1	
	25-95040	*		1	
	25-95041	*		1	
	25-95042	*		1	
	25-95043	*		1	
	25-95044	*		1	
	25-95045	*		1	
	25-95046	*		1	
	25-95047	*		1	
	25-95048	*		1	
	25-95049	*		1	
	25-95050	*		1	
	25-95051	*		1	
	25-95052	*		1	
	25-95053	*		1	
	25-95054	*		1	
	25-95055	*		1	
	25-95056	*		1	
	25-95057	*		1	
	25-95058	*		1	
	25-95059	*		1	
	25-95060	*		1	
	25-95061	*		1	
	25-95062	*		1	
	25-95063	*		1	
	25-95064	*		1	
	25-95065	*		1	
	25-95066	*		1	
	25-95067	*		1	
	25-95068	*		1	
	25-95069	*		1	
	25-95070	*		1	
	25-95071	*		1	
	25-95072	*		1	
	25-95073	*		1	
	25-95074	*		1	
	25-95076	*		1	
	25-95077	*		1	
	25-95078			1	
	25-95079			1	

STOCK	PART NUMBER	SOURCE CODE	FIGURE & INDEX NO.	QTY. PER A/C	MICROFILM INDEX
	25-95080			1	
	25-95081			1	
	25-95082			1	
	25-95083			1	
	25-95084			1	
	25-95085			1	
	25-95086			1	
	25-95087			1	
	25-95088			1	
	25-95089			1	
	25-95090			1	
	25-95091			1	
	25-95092			1	
	25-95093			1	
	25-95094			1	
	25-95095			1	
	25-95096			1	
	25-95097			1	
	25-95098			1	
	25-95300			1	
	25-95301			1	
	25-95302	*		1	
	25-95303			1	
	25-95304	*		1	
	25-95305			1	
	25-95306			1	
	25-95307			1	
	25-95308			1	
	25-95309			1	
	25-95310			1	
	25-95311			1	
	25-95312			1	
	25-95313			1	
	25-95314			1	
	25-95315			1	
	25-95316			1	
	25-95317			1	
	25-95318			1	
	25-95319			1	
	25-95320			1	
	25-95321			1	
	25-95322			1	
	25-95323			1	
	25-95324			1	
	25-95325			1	
	25-95326			1	
	25-95327			1	
	25-95328	*		1	
	25-95329	*		1	
	25-95330	*		1	
	25-95331	*		1	
	25-95332	*		1	
	25-95333	*		1	
	25-95334			1	
	25-95335			1	
	25-95336			1	
	25-95337			1	
	25-95338			1	
	25-95339			1	
	25-95340			1	
	25-95341			1	
	25-95342			1	
	25-95343			1	
	25-95344			1	
	25-95345			1	
	MDE 1508- 3			1	
	MDE 1508- 5			1	
	MDE 15218- 5			1	
	MDE 15218- 7			AR	
	MDE 15218- 9			1	
	MDE 15219- 3			4	
	MDE 23100- 1			1	
	MDE 23100- 3			1	
	MDE 23100- 5			1	
	MDE 23100- 7			1	
	MDE 23100- 9			1	
	MDE 23100- 11			1	
	MDE 23100- 13			1	
	MDE 23100- 15			1	
	MDE 23101- 1			1	
	MDE 23101- 3			1	
	MDE 23101- 5			1	
	MDE 23101- 7			1	
	MDE 23101- 9			1	
	MDE 23101- 11			1	
	MDE 23101- 13			1	
	MDE 23101- 15			1	
	MDE 23102- 1			1	
	MDE 23102- 3			1	
	MDE 23102- 5			1	
	MDE 23102- 7			1	
	MDE 23102- 9			1	
	MDE 23102- 11			1	
	MDE 23102- 13			1	
	MDE 23102- 15			1	
	MDE 23102- 17			2	

STOCK	PART NUMBER	SOURCE CODE	FIGURE & INDEX NO.	QTY. PER A/C	MICROFILM INDEX
	MDE23102- 19			1	
	MDE23102- 21			1	
	MDE23102- 23			1	
	MDE23102- 25			2	
	MDE23103- 1			1	
	MDE23103- 3			1	
	MDE23103- 5			1	
	MDE23103- 7			1	
	MDE23103- 9			1	
	MDE23103- 11			1	
	MDE23103- 13			1	
	MDE23103- 15			1	
	MDE23103- 17			1	
	MDE23103- 19			1	
	MDE23103- 21			1	
	MDE23104- 1			1	
	MDE23104- 3			1	
	MDE23104- 5			1	
	MDE23104- 7			1	
	MDE23104- 9			1	
	MDE23104- 11			1	
	MDE23104- 13			1	
	MDE23104- 15			1	
	MDE23104- 17			1	
	MDE23104- 19			1	
	MDE23104- 21			1	
	MDE2359			AR	
	MDE2370- 1			1	
	MDE2370- 3			1	
	MDE2370- 5			1	
	MDE2370- 7			1	
	MDE2370- 9			1	
	MDE2370- 11			1	
	MDE2370- 13			1	
	MDE2370- 14			1	
	MDE2370- 15			2	
	MDE2371- 1			2	
	MDE2371- 3			2	
	MDE2371- 5			2	
	MDE2371- 7			2	
	MDE2371- 9			2	
	MDE2371- 11			2	
	MDE2371- 13			2	
	MDE2373- 1			1	
	MDE2373- 3			1	
	MDE2373- 5			1	
	MDE2373- 7			1	
	MDE2373- 9			1	
	MDE2373- 11			2	
	MDE2373- 13			2	
	MDE2373- 15			1	
	MDE2373- 17			1	
	MDE2373- 19			2	
	MDE2373- 21			2	
	MDE2373- 23			1	
	MDE2373- 25			2	
	MDE2373- 26			2	
	MDE2373- 27			1	
	MDE2373- 29			1	
	MDE2373- 30			1	
	MDE2373- 31			1	
	MDE2373- 32			1	
	MDE2373- 33			1	
	MDE2373- 35			1	
	MDE2373- 37			1	
	MDE2374- 1			1	
	MDE2374- 3			1	
	MDE2374- 5			1	
	MDE2374- 7			2	
	MDE2374- 9			2	
	MDE2374- 11			1	
	MDE2374- 13			1	
	MDE2374- 15			1	
	MDE2374- 16			1	
	MDE2374- 17			1	
	MDE2374- 18			1	
	MDE2374- 19			2	
	MDE2374- 21			2	
	MDE2374- 23			5	
	MDE2374- 25			1	
	MDE2374- 27			2	
	MDE2374- 29			1	
	MDE2374- 31			8	
	MDE2374- 35			2	
	MDE2374- 37			1	
	MDE2374- 39			2	
	MDE2374- 41			2	
	MDE2374- 43			2	
	MDE2374- 45			1	
	MDE2375- 3			1	
	MDE2376- 1			1	
	MDE2376- 3			1	
	MDE2376- 5			1	
	MDE2376- 7			1	
	MDE2376- 9			1	
	MDE2376- 11			1	
	MDE2376- 13			1	
	MDE2376- 14			1	
	MDE2376- 15			1	
	MDE2376- 17			1	
	MDE2377- 3			2	
	MDE2378- 3			2	
	MDE2379- 3			2	
	MDE2379- 4			2	
	MDE2380- 3			2	
	MDE2380- 4			2	
	MDE2381- 3			1	
	MDE2381- 5			3	
	MDE2381- 7			1	
	MDE2382- 3			4	
	MDE2384- 3			2	
	MDE2385- 3			1	
	MDE2386- 1			2	
	MDE2386- 3			2	
	MDE2387- 1			8	
	MDE2387- 3			8	
	MDE2388- 3			1	
	MDE2389- 1			1	
	MDE2389- 2			1	
	MDE2389- 3			1	
	MDE2389- 4			1	
	MDE2389- 5			1	
	MDE2389- 6			1	
	MDE2389- 7			1	
	MDE2389- 8			1	
	MDE2389- 9			2	
	MDE2389- 11			1	
	MDE2389- 12			1	
	MDE2389- 13			1	
	MDE2389- 14			1	
	MDE2389- 15			1	
	MDE2389- 16			1	
	MDE2390- 3			1	
	MDE2391- 1			2	
	MDE2391- 3			2	
	MDE2391- 5			2	
	MDE2391- 6			2	
	MDE2391- 7			4	
	MDE2392- 3			4	
	MDE2393- 3			1	
	MDE2394- 3			1	
	MDE2395- 1			1	
	MDE2395- 3			1	
	MDE2395- 5			2	
	MDE2395- 7			1	
	MDE2396- 3			1	
	MDE2398- 1			1	
	MDE2398- 3			1	
	MDE2398- 5			1	
	MDE2398- 7			1	
	MDE2399- 1			1	
	MDE2399- 3			1	
	MDE2399- 5			1	
	MDE2399- 7			1	
	MDE2399- 9			1	
	MDE2399- 11			1	
	MDE2399- 13			1	
	MDE2399- 15			1	
	MDE2399- 17			1	
	MDE2399- 19			2	
	MDE2399- 21			2	
	MDE2399- 23			1	
	MDE2399- 25			1	
	MDE2500			2	A-116
	MDE2502- 3F			2	C-302
	MDE2503- 3			2	
	MDE2503- 3F			1	C-303
	MDE2504- 3			1	
	MDE2504- 3F			AR	D-388
	MDE2505- 1			1	
	MDE2505- 3			2	
	MDE2505- 5			1	
	MDE2505- 7			2	
	MDE2505- 9			1	
	MDE2505- 11			2	B-337
	MDE2506- 3			2	B-338
	MDE2507- 3			2	B-339
	MDE2508- 1			AR	B-340
	MDE2509- 1			AR	
	MDE2509- 3			1	
	MDE2509- 5			1	
	MDE2509- 7			AR	D-389
	MDE2510- 1			AR	
	MDE2510- 2			2	
	MDE2510- 3			2	
	MDE2510- 5			2	
	MDE2510- 7			2	
	MDE2510- 9			2	
	MDE2510- 11			2	
	MDE2510- 13			2	
	MDE2510- 15			2	
	MDE2510- 17				

STOCK	PART NUMBER	SOURCE CODE	FIGURE & INDEX NO.	QTY. PER A/C	MICROFILM INDEX
	MDE2510- 21			2	
	MDE2510- 23			2	
	MDE2510- 25			2	
	MDE2510- 27			1	
	MDE2510- 28			1	
	MDE2510- 29			2	
	MDE2510- 31			1	
	MDE2510- 32			1	
	MDE2510- 33			2	
	MDE2510- 35			2	
	MDE2510- 37			2	
	MDE2510- 39			2	
	MDE2510- 41			2	
	MDE2510- 43			8	
	MDE2510- 45			2	
	MDE2510- 47			4	
	MDE2510- 51			8	
	MDE2510- 55			2	
	MDE2510- 57			2	
	MDE25100- 3			1	
	MDE25101- 3			2	A-146
	MDE25102- 1			1	D-402
	MDE25102- 3			1	
	MDE25102- 5			1	
	MDE25102- 6			1	
	MDE25102- 7			1	
	MDE25102- 9			1	
	MDE25102- 11			1	
	MDE25102- 13			1	
	MDE25104- 3			2	B-351
	MDE25105- 3			1	B-352
	MDE25107- 3			1	B-354
	MDE25108- 3			1	
	MDE25109- 5			1	
	MDE25110- 3			1	A-147
	MDE25111- 7			1	B-357
	MDE25112- 3			1	D-403
	MDE25113- 3			2	A-148
	MDE25115- 3			2	D-404
	MDE25115- 5			4	
	MDE25115- 7			4	
	MDE25115- 11			16	
	MDE25115- 13			4	
	MDE25115- 15			4	
	MDE25115- 19			2	
	MDE25115- 21			2	
	MDE25115- 23			2	
	MDE25115- 25			4	
	MDE25115- 27			8	
	MDE25115- 29			16	
	MDE25115- 31			4	
	MDE25115- 33			4	
	MDE25115- 35			4	
	MDE25115- 37			4	
	MDE25115- 39			4	
	MDE25115-301			AR	
	MDE25115-302			AR	
	MDE25116- 1			AR	D-405
	MDE25116- 3			1	
	MDE25116-301			AR	
	MDE25117- 1			1	C-313
	MDE25118- 3			2	A-149
	MDE25119- 3			1	A-150
	MDE2512- 3			1	
	MDE25120- 3			1	A-151
	MDE25121- 3			1	A-152
	MDE25122- 3			2	B-358
	MDE25123- 3			1	B-359
	MDE25124- 1			1	
	MDE25125- 3			1	
	MDE25126- 3			2	
	MDE25127- 3			4	A-153
	MDE25128- 3			2	A-154
	MDE25129- 3			1	A-155
	MDE2513- 3			1	A-118
	MDE25131- 1			1	
	MDE25132- 3			1	A-157
	MDE25134- 1			AR	
	MDE25135- 1			1	
	MDE25136- 1			AR	
	MDE25136- 3			1	
	MDE25136- 5			1	
	MDE25136- 7			1	
	MDE25136- 9			2	
	MDE25136- 11			1	
	MDE25136- 13			2	
	MDE25136- 15			2	
	MDE25136- 17			1	
	MDE25136- 19			1	
	MDE25138- 1			AR	
	MDE25139- 1			AR	
	MDE25140- 3			2	
	MDE25140- 5			2	
	MDE25141- 1			2	
	MDE25142- 3			2	
	MDE25143- 1			2	
	MDE25143- 3			2	
	MDE25143- 5			2	
	MDE25144- 3			2	
	MDE25144- 3C			2	
	MDE25145- 3			2	
	MDE25145- 5			2	
	MDE25146- 3			4	
	MDE25147- 1			1	
	MDE25147- 3			1	
	MDE25147- 5			1	
	MDE25147- 7			1	
	MDE25147- 9			1	
	MDE25148- 1			2	
	MDE25148- 3			2	
	MDE25148- 5			2	
	MDE25148- 7			2	
	MDE2515- 1			AR	D-390
	MDE2515- 301			AR	
	MDE25151- 1			1	
	MDE25151- 3			1	
	MDE25151- 5			1	
	MDE25151- 7			1	
	MDE25151- 9			2	
	MDE25151- 11			1	
	MDE25152- 1			1	
	MDE25152- 2			1	
	MDE25152- 3			1	
	MDE25152- 4			1	
	MDE25152- 5			2	
	MDE25152- 7			2	
	MDE25152- 9			1	
	MDE25152- 10			1	
	MDE25155- 3			1	
	MDE25156- 3			2	
	MDE25157- 3			2	
	MDE25157-3-5C			2	
	MDE25158- 3			1	
	MDE25159- 3			2	
	MDE2516- 1			AR	B-341
	MDE2516- 3			1	
	MDE2516- 3F			1	
	MDE25162- 3			1	
	MDE25163- 1			AR	
	MDE25163- 2			AR	
	MDE25163- 3			1	
	MDE25163- 3C			1	
	MDE25163- 4			1	
	MDE25163- 4C			1	
	MDE25163- 5			1	
	MDE25163- 5C			1	
	MDE25163- 6			1	
	MDE25163- 6C			1	
	MDE25163- 7			2	
	MDE25163- 13			2	
	MDE25163- 15			2	
	MDE25163- 17			2	
	MDE25163- 19			2	
	MDE25163- 21			2	
	MDE25163- 23			2	
	MDE25163- 25			2	
	MDE25163- 27			1	
	MDE25163- 27C			1	
	MDE25163- 28			1	
	MDE25163- 28C			1	
	MDE25163- 29			1	
	MDE25163- 30			1	
	MDE25163- 31			6	
	MDE25163- 33			2	
	MDE25163- 35			2	
	MDE25163- 37			2	
	MDE25163- 39			2	
	MDE25163-301			AR	
	MDE25163-302			AR	
	MDE25164- 3			1	
	MDE25164- 4			1	
	MDE25164- 5			1	
	MDE25164- 6			1	
	MDE25165- 1			AR	
	MDE25165- 2			AR	
	MDE25165- 3			1	
	MDE25165- 4			1	
	MDE25165- 5			1	
	MDE25165- 6			1	
	MDE25165- 7			1	
	MDE25165- 8			1	
	MDE25165- 9			1	
	MDE25165- 10			1	
	MDE25165- 11			1	
	MDE25165- 12			1	
	MDE25165- 13			1	
	MDE25165- 14			1	
	MDE25165- 15			1	
	MDE25165- 16			1	
	MDE25167- 1			AR	
	MDE2517- 3			2	A-119
	MDE2517- 5			2	

STOCK	PART NUMBER	SOURCE CODE	FIGURE & INDEX NO.	QTY. PER A/C	MICROFILM INDEX
	MDE2517- 7			2	
	MDE25171- 1			1	
	MDE25171- 3			2	
	MDE25171- 5			1	
	MDE25171- 7			1	
	MDE25171- 9			1	
	MDE2518- 3			1	A-120
	MDE25188- 3			2	
	MDE2519- 3			1	A-121
	MDE25199- 1			1	
	MDE25199- 3			1	
	MDE25199- 5			2	
	MDE25199- 7			2	
	MDE25199- 9			2	
	MDE25199- 11			2	
	MDE25199- 13			2	
	MDE25199- 15			1	
	MDE25199- 17			1	
	MDE25199- 19			2	
	MDE25199- 21			2	
	MDE25199- 23			2	
	MDE25199- 25			4	
	MDE25199- 27			2	
	MDE25199- 29			8	
	MDE25199- 31			4	
	MDE25199- 33			1	
	MDE25199- 35			2	
	MDE25199- 37			4	
	MDE25199- 39			2	
	MDE25199- 41			1	
	MDE25199- 43			1	
	MDE2520- 1			AR	D-391
	MDE2520- 3			1	
	MDE2520- 5			1	
	MDE2520- 7			2	
	MDE2520- 9			1	
	MDE2520- 11			1	
	MDE25200- 3			2	
	MDE25201- 3			2	
	MDE25202- 3			1	
	MDE2521- 3			1	A-122
	MDE2523- 3			2	A-123
	MDE2524- 3			1	B-342
	MDE2525- 3			1	B-343
	MDE2526- 3			1	A-124
	MDE2527- 3			1	A-125
	MDE2531- 3			1	A-126
	MDE2535- 1			AR	D-392
	MDE2535- 2			AR	
	MDE2535- 3			1	
	MDE2535- 4			1	
	MDE2535- 5			1	
	MDE2535- 6			1	
	MDE2535- 7			1	
	MDE2535- 8			1	
	MDE2536- 3			1	A-127
	MDE2537- 1			AR	C-304
	MDE2537- 3			1	
	MDE2537- 5			1	
	MDE2537- 7			1	
	MDE2538- 1			AR	XA-53
	MDE2538- 3			1	
	MDE2538- 5			1	
	MDE2539- 3			1	C-305
	MDE2539- 3F			1	
	MDE2540- 3			1	B-344
	MDE2540- 3F			1	
	MDE2541- 3			1	
	MDE2541- 3F			1	
	MDE2542- 1			AR	D-393
	MDE2542- 3			1	
	MDE2542- 4			1	
	MDE2542- 5			1	
	MDE2542- 7			1	
	MDE2542- 9			1	
	MDE2542- 11			1	
	MDE2542- 13			1	
	MDE2542- 15			2	
	MDE2542- 19			1	
	MDE2542- 21			1	
	MDE2542- 23			2	
	MDE2542- 25			2	
	MDE2542- 27			2	
	MDE2542- 29			2	
	MDE2542- 31			2	
	MDE2542- 33			2	
	MDE2542- 35			1	
	MDE2542- 37			8	
	MDE2542- 39			1	
	MDE2542- 41			1	
	MDE2542- 43			2	
	MDE2542- 45			2	
	MDE2543- 1			AR	D-394
	MDE2543- 3			1	
	MDE2544- 1			1	B-346
	MDE2544- 3			1	

STOCK	PART NUMBER	SOURCE CODE	FIGURE & INDEX NO.	QTY. PER A/C	MICROFILM INDEX
	MDE2545- 3			1	A-128
	MDE2546- 3			1	A-129
	MDE2547- 3			1	A-130
	MDE2548- 3			1	A-131
	MDE2549- 3			2	B-347
	MDE2550- 3			2	B-348
	MDE2551- 1				
	MDE2551- 3				
	MDE2551- 4				
	MDE2552- 3			2	
	MDE2553- 3			2	
	MDE2554- 1			1	D-395
	MDE2554- 3			2	
	MDE2554- 5			1	
	MDE2554- 7			2	
	MDE2554- 11			1	
	MDE2554- 13			1	
	MDE2554- 15			1	
	MDE2555- 1			AR	C-307
	MDE2555- 5			1	
	MDE2555- 7			1	
	MDE2556- 1			AR	C-308
	MDE2556- 3			1	
	MDE2556- 5			1	
	MDE2557- 3			2	A-134
	MDE2558- 1			1	A-135
	MDE2558- 3			1	
	MDE2558- 5			1	
	MDE2558- 7			1	
	MDE2560- 1			AR	D-396
	MDE2560- 3			1	
	MDE2560- 5			1	
	MDE2560- 6			1	
	MDE2560- 7			1	
	MDE2560- 8			1	
	MDE2560- 9			1	
	MDE2560- 10			1	
	MDE2560- 11			1	
	MDE2560- 12			1	
	MDE2560- 13			1	
	MDE2560- 14			1	
	MDE2560- 15			1	
	MDE2560- 16			1	
	MDE2560- 17			1	
	MDE2560- 18			1	
	MDE2560- 19			1	
	MDE2560- 20			1	
	MDE2560- 21			1	
	MDE2560- 22			1	
	MDE2560- 23			1	
	MDE2560- 24			1	
	MDE2560- 25			1	
	MDE2560- 26			1	
	MDE2560- 27			1	
	MDE2560- 28			1	
	MDE2560- 29			1	
	MDE2560- 30			1	
	MDE2560- 31			1	
	MDE2560- 32			1	
	MDE2560- 33			1	
	MDE2560- 34			1	
	MDE2560- 35			1	
	MDE2560- 36			1	
	MDE2560- 37			1	
	MDE2560- 38			1	
	MDE2560- 39			1	
	MDE2560- 41			8	
	MDE2560- 43			14	
	MDE2560- 45			2	
	MDE2560- 47			2	
	MDE2560- 49			2	
	MDE2560- 51			2	
	MDE2560- 53			2	
	MDE2560- 55			2	
	MDE2560- 57			2	
	MDE2560- 59			2	
	MDE2560- 61			2	
	MDE2560- 63			2	
	MDE2561- 1			1	D-397
	MDE2561- 3			1	
	MDE2561- 5			1	
	MDE2561- 7			2	
	MDE2561- 9			1	
	MDE2561- 11			1	
	MDE2561- 13			1	
	MDE2561- 15			2	
	MDE2561- 17			1	
	MDE2561- 19			1	
	MDE2562- 3			4	A-136
	MDE2563- 3			2	C-309
	MDE2564- 1			AR	
	MDE2566- 1			AR	D-398
	MDE2566- 3			1	
	MDE2566- 5			1	
	MDE2566- 7			3	
	MDE2566- 9			1	

STOCK	PART NUMBER	SOURCE CODE	FIGURE & INDEX NO.	QTY. PER A/C	MICROFILM INDEX
	MDE2566- 11			1	
	MDE2566- 13			2	
	MDE2566- 15			2	
	MDE2566- 17			1	
	MDE2566- 19			1	
	MDE2566- 21			1	
	MDE2567- 1			AR	
	MDE2567- 3			1	
	MDE2567- 5			1	
	MDE2567- 7			1	
	MDE2567- 9			1	
	MDE2567- 11			2	
	MDE2567- 13			2	
	MDE2567- 15			1	
	MDE2567- 17			1	
	MDE2567- 19			1	
	MDE2568- 1			AR	D-400
	MDE2568- 3			1	
	MDE2568- 9			2	
	MDE2568- 11			6	
	MDE2568- 13			4	
	MDE2568- 15			11	
	MDE2568- 17			4	
	MDE2568- 18			4	
	MDE2568- 19			1	
	MDE2568- 20			1	
	MDE2568- 21			2	
	MDE2568- 23			4	
	MDE2568- 25			2	
	MDE2568- 27			4	
	MDE2568- 29			2	
	MDE2568- 31			2	
	MDE2568- 33			2	
	MDE2568- 35			2	
	MDE2568- 43			1	
	MDE2568- 47			4	
	MDE2568- 55			2	
	MDE2568- 57			1	
	MDE2568- 59			2	
	MDE2568- 61			2	
	MDE2568- 63			2	
	MDE2568- 65			4	
	MDE2568- 71			2	
	MDE2568- 73			1	
	MDE2568- 75			2	
	MDE2568- 77			1	
	MDE2568- 79			1	
	MDE2568- 83			1	
	MDE2568- 81			1	
	MDE2569- 1			1	
	MDE2569- 3			1	
	MDE2570- 1			1	
	MDE2570- 3			1	
	MDE2570- 5			2	
	MDE2570- 7			4	
	MDE2570- 9			2	
	MDE2570- 11			2	
	MDE2570- 13			2	
	MDE2570- 15			1	
	MDE2570- 17			2	
	MDE2571- 3			1	
	MDE2572- 3			1	A-137
	MDE2573- 3			1	A-138
	MDE2574- 3			1	A-139
	MDE2574- 5			1	
	MDE2575- 9			2	D-401
	MDE2575- 11			2	
	MDE2575- 15			2	
	MDE2575- 17			1	
	MDE2575- 18			1	
	MDE2575- 21			1	
	MDE2575- 23			1	
	MDE2575- 25			1	
	MDE2575- 27			2	
	MDE2575- 29			2	
	MDE2575- 31			1	
	MDE2575- 33			1	
	MDE2575- 35			1	
	MDE2575- 37			1	
	MDE2575- 301			AR	
	MDE2576- 3			2	A-140
	MDE2577- 3			1	A-141
	MDE2580- 3			1	A-143
	MDE2582- 3			1	A-144
	MDE2583- 3			1	A-145
	MDE2584- 1			AR	C-311
	MDE2584- 3			1	
	MDE2584- 5			1	
	MDE2585- 3			AR	B-350
	MDE2585- 3F			1	
	MDE2587- 3			2	
	MDE2588- 3			2	
	MDE2589- 1			1	
	MDE2589- 3			1	
	MDE2589- 5			2	
	MDE2589- 7			2	

STOCK	PART NUMBER	SOURCE CODE	FIGURE & INDEX NO.	QTY. PER A/C	MICROFILM INDEX
	MDE2589- 9			2	
	MDE2590- 1			1	
	MDE2590- 2			1	
	MDE2590- 3			1	
	MDE2590- 4			1	
	MDE2590- 5			4	
	MDE2590- 7			4	
	MDE2590- 9			4	
	MDE2591- 1			1	
	MDE2591- 3			1	
	MDE2591- 5			2	
	MDE2591- 7			2	
	MDE2591- 9			2	
	MDE2592- 1			1	
	MDE2592- 3			1	
	MDE2592- 5			2	
	MDE2592- 7			2	
	MDE2592- 9			2	
	MDE2593- 1			1	
	MDE2593- 3			1	
	MDE2593- 5			2	
	MDE2593- 7			2	
	MDE2597- 3			1	
	MDE2598- 3			1	
	MDE2598- 3F			2	
	MDE2598- 4			1	
	MDE2599- 1			1	
	MDT2502- 1			AR	
	MDT2503- 1			1	
	MDT2503- 1-3			1	
	MDT2503- 1-3C			1	
	MDT2504- 1			1	
	MDT2504- 3			1	
	MDT2505- 3			1	
	MDT2505- 3C			1	
	MDT2506- 3			1	
	MDT2508- 3			1	
	MDT25130- 3			AR	
	MDT25130- 5			AR	
	MDT25130- 7			AR	
	MDT25130- 9			AR	
	MDT25130- 11			AR	
	MDT2515- 1			AR	
	MDT2515- 3			1	
	MDT2515- 5			1	
	MDT2515- 7			1	
	MDT2516- 3			1	
	MDT2517- 1			AR	
	MDT2517- 3			1	
	MDT2517- 5			1	
	MDT2517- 7			1	
	MDT2517- 9			1	
	MDT2517- 11			1	
	MDT2518- 3			AR	
	MDT2518- 5			AR	
	MDT2519- 1			AR	
	MDT2519- 3			1	
	MDT2519- 5			1	
	MDT2519- 7			1	
	MDT2520- 3			AR	
	MDT2524- 1			AR	
	MDT2524- 3			1	
	MDT2524- 5			1	
	MDT2524- 7			1	
	MDT2524- 9			1	
	MDT2524- 11			2	
	MDT2524- 13			1	
	MDT2524- 15			1	
	MDT2524- 17			1	
	MDT2524- 19			1	
	MDT2525- 1			AR	
	MDT2525- 3			1	
	MDT2525- 5			1	
	MDT2525- 7			1	
	MDT2525- 9			1	
	MDT2525- 11			1	
	MDT2525- 13			1	
	MDT2526- 1			AR	
	MDT2526- 3			1	
	MDT2526- 5			1	
	MDT2527- 1			1	
	MDT2527- 3			1	
	MDT2527- 5			1	
	MDT2528			1	
	MDT2529			1	
	MDT2530- 3			2	
	MDT2531- 3			1	
	MDT2532- 3			2	
	MDT2578- 1			AR	
	MDT2578- 3			1	
	MDT2579- 3			1	

PART NUMBER	STOCK NUMBER	FIGURE & INDEX NO.	QTY. PER A/C
ADAPTER, RACK		174 - 5	2
BOMB RACK		174 - 5	2
		174 - 6	
CARTRIDGE		87 - 1	1
COMPUTER		42 - 40	2
		95 - 1	
FEED MECH LH		173 -	2
		173 - 30	
FEED MECH RH		173 - 8	2
		173 - 23	
GUN		173 - 9	4
		173 - 16	
		173 - 24	
		173 - 31	
GUN SIGHT		83 - 19	1
LAUNCHER		165 - 4	6
POWER SUPPLY		95 - 26	3
		105 - 90	
REGULATOR		95 - 19	1
UNIT, RANGE		95 - 20	1
AB401		95 - 85	8
		99 - 5	
		100 - 19	
AB401SB		98 - 49	9
ACT509HT6-4	R43HKM-ACT509HT6-4		16
ACT509HT6-5	R43HKM-ACT509HT6-5		10
ACT509HT6-6	R43HKM-ACT509HT6-6		6
ACT509HT6-7	R43HKM-ACT509HT6-7		10
ACT509HT6-8			16
AERO 1B		105 - 90	2
AERO 1481		165 - 4	6
AERO 15A		165 - 4	6
AERO 2A		105 - 90	2
AERO 62A		174 - 5	2
		174 - 6	
AF216C1-12		151 - 23	1
AF216C1-14	R77B999-75014-0100	152 - 17	2
AF216C2-16		187 - 4	1
AF47A1562	R33P492-659	69 - 38	5
		132 -103	
		135 -111	
AF765-10		131 -120	2
AGS1	R17F14245	97 - 10	57
		97 - 25	
		97 - 26	
AGS2	R17F14270-50	97 - 24	1
ALPPHT6-2			254
ALPPHT6-3			164
ALPPHT6-4			18
ALPPHT6-5			2
ALPPHT6-6	R43HKM-ALPPHT6-6		5
ALPPHT6-8	R43HKM-ALPPHT6-8		10
ALPPHT8-4			2
ALPPNT8-17	R43HKM-ALPPNT8-17		1
ALPPNT8-18	R43HKM-ALPPNT8-18		1
ALSFT10-7	R43HKM-ALSFT10-7		14
ALSFT10-9	R43HKM-ALSFT10-9		12
AL1423-1		55 -102	1
AL1910	R828C-AL1910	55 -102	1
AL58D1045A11		133 - 17	4
		158 - 73	
AL58D1045A12		135 - 5	3
AM-291/APN-22	R16AN-AM291APN22	95 - 81	1
AM-608/ARA-25	R16AN-AM608ARA25	95 - 78	1
AN-N6A	E18C308-260	72 - 1	1
AN10-15A	R43B81938		4
AN10-32A	R43B82016	183 - 22	2
AN10-54A		180 - 29	2
AN115-16	R12S1306	52 - 34	1
AN155-16L	R12B1160-13	115 - 14	13
AN155-16S	R12B1160-14	59 - 25	27
AN155-32L	R12B1160-19	4 - 5	38
AN155-32S	R12B1160-20	19 - 40	35
AN155-8S	R12B1160-12	52 - 23	6
AN161-22LL	R12F1590-10	168 - 35	4
AN161-32LL	R12F1590-14	19 -	2
AN165-16LL			2
AN165-16LS	R12F633-25		32
AN165-16RL	R12F633		2
AN165-16RS	R12F634		32
AN165-22LL	R12E638-50	168 - 42	4
AN165-32LL	R12F638-200	4 -	16
AN165-32LS	R12F639-200	19 -	26
AN165-32RL	R12F639	4 -	38
AN165-32RS	R12F640	19 -	26
AN174-13A	R43B76800-110	129 - 45	1
AN174-14A	R43B76800-120	10 - 34	4
AN174-16	R43B76500-2010		1
AN174-25A	R43B76800-230		2
AN174-6A	R43B76800-49	4 -	66
AN174-7A	R43B76800-50	4 -	64
AN175-12A	R43B76810-100	184 - 36	1
AN175-20A	R43B76810-180	184 - 3	1
AN175-25A		184 - 2	2
AN175-6A			24
AN175-7A			48

PART NUMBER	STOCK NUMBER	FIGURE & INDEX NO.	QTY. PER A/C
AN175H14A		116 - 82	2
AN175H24A		116 - 83	2
AN176-16A		184 - 35	1
AN176-20A	SUB R43B76500-2476	178 - 49	2
AN176-52A		146 -114	1
AN178-17A		37 - 6	1
AN178-21	R43B76520-200	88 - 9	2
AN178-22A			4
AN178-25A		185 - 12	1
AN178-30A		37 - 5	3
AN179-20A			1
AN180-24	R43B76535-360	157 - 33	2
AN180-46A		185 - 16	1
AN180-61A		185 - 11	1
AN200KP3	R77B512-00309-0004	166 - 22	36
AN200KP4	R77B512-00417-0004	152 -	7
AN200KP5	R77B512-00509-0004	56 - 35	18
AN200KP6	R77B512-00613-0004	154 -	4
AN200KP8	R77B512-00811-0004	147 -	4
AN200KS4	R77B513-00417-0004	20 - 73	14
AN200KS5	R77B513-00509-0004	146 -	4
AN200KS8	R77B513-00811-0004	8 - 12	18
AN201KP10A	R77B512-01007-0004	168 -	3
AN201KP12A	R77B512-01207-0004	9 - 10	43
AN201KP16A	R77B512-01601-0004	16 - 22	9
AN201KP4A	R77B512-00407-0004	10 - 24	10
AN201KP5A	R77B512-00505-0004	55 -	5
AN201KP6A	R77B512-00609-0004	10 - 44	12
AN201KP8A	R77B512-00805-0004	9 - 18	33
AN202KP23B	R77B512-02301-0004	57 - 49	2
AN202KP47B	R77B512-04701-0004	56 - 43	2
AN206DSP4	R77B519-00421-8001	10 -	13
AN206DSP5	R77B519-00513-8001	153 -	1
AN206DSP6	R77B519-00617-8001	140 -	3
AN207DP3	R77B518-00315-0004	6 - 6	12
AN207DP4	R77B518-00421-0004	150 -	2
AN210-1B	R82P810100	91 -	2
AN218P4	R77B542-00430-0504	140 - 48	2
AN218P5	R77B542-00522-0504	140 - 58	2
AN219-2	R82AN-219-2	52 - 24	28
AN219-4	R82AN-219-4	115 - 16	5
AN227-1BL	R42F44005		21
AN227-10-10	R42F48410-10	192 -	234
AN227-2B	R42F44010		21
AN227-3B	R42F44020		20
AN227-5B	R42F44030		20
AN227-6	R42F48370		104
AN227-7	R42F48380		104
AN229-1AL18-1		151 -	1
AN229-1AL23-1			1
AN229-1AL45-1			1
AN23-10	R43B32774	138 - 37	2
AN23-10A	R43B32776	72 - 8	2
AN23-11	R43B32780	59 - 5	1
AN23-11A	R43B32782		1
AN23-12	R43B32786	59 - 2	5
AN23-12A	R43B32788		1
AN23-13	R43B32792	90 - 2	3
AN23-14	R43B32798	88 - 26	2
AN23-15A	R43B32806	23 - 36	6
AN23-16	R43B32810	156 - 32	1
AN23-17A	R43B32818	60 - 17	1
AN23-18A	R43B32824	8 - 3	32
AN23-19A	R43B32830	8 - 16	152
AN23-20A	R43B32836		110
AN23-21A	R43B32842	149 - 9	1
AN23-23A	R43B32854		2
AN23-24A	R43B32860	6 - 7	16
AN23-25	R43B32864	115 - 20	4
AN23-26A	R43B32872	150 - 14	1
AN23-27	R43B32876	43 - 6	2
AN23-27A	R43B32878		6
AN23-29	R43B32888	43 - 36	1
AN23-31	R43B32900	16 - 2	4
AN23-35		95 - 7	1
AN23-8A	R43B32764	149 - 18	176
AN23-9	R43B32768	138 - 39	3
AN23-9A	R43B32770		4
AN24-14	R43B33336	184 - 4	2
AN24-15	R43B33342	138 - 35	3
AN24-15A	R43B33344		18
AN24-17A	R43B33356		1
AN24-18	R43B33360	150 - 5	2
AN24-18A	R43B33362	6 - 12	11
AN24-19A	R43B33368	57 - 9	2
AN24-21A	R43B33380	6 - 10	22
AN24-24A	R43B33398	115 - 22	1
AN24-25A	R43B33404		1
AN24-31	R43B33438	43 - 8	2
AN24-44A	R43B33500	5 -	6
AN24-48A	R43B33512	20 - 21	6
AN24-8A	R43B33302		4
AN25-11	R43B33912		2
AN25-13A	R43B33926	88 -	2
AN25-23A	R43B33986	21 - 2	6
AN25-28A			8

PART NUMBER	STOCK NUMBER	FIGURE & INDEX NO.	QTY. PER A/C
AN253-2-1038	*R22W3510	105 - 14	3
AN253-2-1171	*R22W3510	50 - 34	2
AN253-2-1234	*R22W3510	182 - 43	2
AN253-2-1592	*R22W3510	182 - 44	2
AN253-2-185	*R22W3510	113 - 17	1
AN253-2-190	*R22W3510	106 - 41	1
AN253-2-1980		177 - 11	2
AN253-2-200		19 - 28	4
AN253-2-2025	*R22W3510	183 - 44	2
AN253-2-250	*R22W3510	5 -	2
AN253-2-338	*R22W3510	105 - 27	10
AN253-2-423	*R22W3510	112 - 11	1
AN253-2-425	*R22W3510	47 -	2
AN253-2-4357		177 - 5	2
AN253-2-4456		177 - 28	2
AN253-2-488	*R22W3510	7 -	2
AN253-2-493	*R22W3510	112 - 6	1
AN253-2-582	*R22W3510	7 - 4	2
AN253-2-5870		46 -	2
AN253-2-608	*R22W3510	7 -	2
AN253-2-704	*R22W3510	169 - 1	8
AN253-2-778	*R22W3510	4 -	2
AN253-2-783		176 - 3	2
AN253-2-800	*R22W3510	47 -	1
AN253-2-812	*R22W3510	114 - 6	1
AN253-2-978	*R22W3510	97 - 13	1
AN253-3-190	*R22W3513-75	180 - 12	2
AN253-3-388	*R22W3513-75	166 - 39	4
AN253-3-425	*R22W3513-75	87 - 17	1
AN253-4-3829	*R22W3560	3 - 3	2
AN253-4-5707	*R22W3560	3 - 2	2
AN253-5-1055	*R22W3617	183 - 31	8
AN253-5-110	*R22W3617	86 - 10	1
AN253-5-1331	*R22W3617	108 -	2
AN253-5-1629	*R22W3617	113 - 4	1
AN253-5-1728	*R22W3617	108 -	2
AN253-5-2800	*R22W3617	139 - 9	2
AN253-5-287	*R22W3617	18 -	4
AN253-5-328	*R22W3617	141 - 47	2
AN253-5-3445	*R22W3617	139 - 8	2
AN253-5-388	*R22W3617	20 - 7	4
AN253-5-400	*R22W3617	43 -	2
AN253-5-546	*R22W3617	141 - 31	4
AN253-5-592	*R22W3617	114 - 35	1
AN253-5-638	*R22W3617	108 - 53	1
AN253-5-7580	*R22W3617	106 - 6	2
AN253-5-7780	*R22W3617	106 - 5	2
AN253-5-828	*R22W3617	114 - 15	1
AN253-5-955		39 -	1
AN253-5-982	*R22W3617	113 - 10	1
AN2552-3A	R17R1258-190	15 - 17	2
AN256F10	R43N92245		593
AN256F6	R43N93400-100		3
AN256F8	R43N92240		1
AN257HC2-350		166 -	21
AN257HP3-1000	*R42H17153	97 - 14	1
AN257HP4-1000	*R42H15540	97 - 19	1
AN257H4-800	*R42H15540	47 -132	2
AN257XC3-400		166 -	2
AN257XP3-149	*R42H15535	113 - 18	1
AN257XP5-250		19 - 26	4
AN257YC3-400		47 - 7	2
AN257YC3-400C		46 - 8	1
AN257YC5-449		47 - 6	2
AN257YP3-200		113 - 19	1
AN257YP5-250		19 - 27	4
AN26-14	R43B34540	184 - 23	2
AN26-24A	R43B34602		8
AN26-28A	R43B34626	21 - 10	2
AN3-10	R43B77030		2
AN3-10A	R43B77032	37 - 25	276
AN3-11	R43B77036	46 -143	10
AN3-11A	R43B77038	8 - 4	132
AN3-12A	R43B77044	99 - 2	53
AN3-13A	R43B77050	19 - 15	145
AN3-14A	R43B77056	18 -	78
AN3-15	R43B77060	148 - 11	1
AN3-15A	R43B77062	18 - 92	79
AN3-16A	R43B77068	16 - 8	60
AN3-17	R43B77072	148 - 2	1
AN3-17A	R43B77074	70 -	16
AN3-20A	R43B77080	28 -	32
AN3-21A	R43B77086	4 -	52
AN3-22A	R43B77092	9 - 5	86
AN3-23	R43B77096		1
AN3-23A	R43B77098	70 -	21
AN3-24A	R43B77104	18 -	21
AN3-25A	R43B77110	18 -	20
AN3-26A	R43B77116	131 -	5
AN3-3	R43B77000		1
AN3-3A	R43B77002	132 -	48
AN3-30A	R43B77128	131 -	20
AN3-31A	R43B77134	9 - 16	29
AN3-32A	R43B77140	33 - 2	1
AN3-34A	R43B77152	131 -	8
AN3-4	R43B77006		2

* INDICATES MAKE FROM

PART NUMBER	STOCK NUMBER	FIGURE & INDEX NO.	QTY. PER A/C
AN3-4A	R43B77008	4 -	824
AN3-41A	R43B77182	168 - 3	1
AN3-44A	R43B77200	105 - 65	1
AN3-47A	R43B77218	83 - 24	1
AN3-5	R43B77012	46 -149	65
AN3-5A	R43B77014	4 -	1920
AN3-6A	R43B77020	4 -	1173
AN3-7	R43B77024	56 - 41	3
AN3-7A	R43B77026	16 - 20	417
AN3C4A	R43B300015	126 - 2	16
AN3H11A	R43B85040-17	73 - 19	1
AN3H12A	R43B85040-19		2
AN3H13A	R43B85040-22		8
AN3H17A	R43B85040-36	63 -	6
AN3H25A	R43B85040-52		2
AN3H3A	R43B85039	95 -	7
AN3H4A	R43B85039-10	35 - 17	24
AN3H5A	R43B85039-20	71 -	24
AN3H6A	R43B85040		18
AN3021-1	R17S28246-120	34 - 17	9
AN3021-2	R17S28256-10	79 - 26	4
AN3021-3	R17S28254-25	74 - 36	10
AN3021-7	R17S28256-45	73 - 10	13
AN3021-8	R17S28266-1-7	13 - 40	5
AN3022-8	R17S28266-28	101 - 51	1
AN3025-1	R86HEM-A700A	100 - 27	1
AN3027-1	R17S28226-95	74 - 51	6
AN3027-2	R17S28234-270	81 - 24	1
AN3027-3	R17S28231-105	74 - 57	7
AN3027-6	R17S28231-125	136 - 35	5
AN3028-3	R17G8850	77 - 12	3
AN3032-3	R17L11779-265	7 - 49	2
AN3032-4	R17L11779-260	7 - 49	2
AN3035-2	R17L11442	13 - 1	5
AN3049-1	R17L12932-17-30	104 - 24	1
AN3053-10	R17F1531-10	141 - 41	3
AN3053-12	R17F1531-12	138 - 16	1
AN3053-16	R17F1531-16	4 -	8
AN3053-20	R17F1531-20	46 - 13	6
AN3053-32	R17F1531-32	47 - 12	2
AN3054-10	R17N997	101 - 54	7
AN3054-12	R17N998	138 - 16	1
AN3054-16	R17N1000	4 -	8
AN3054-20	R17N1002	46 - 13	11
AN3054-3	R17N989	101 - 49	1
AN3054-32	R17N1007	47 - 12	2
AN3054-4	R17N991	89 - 1	3
AN3054-6	R17N993	102 - 49	4
AN3055-16-8	R17A2322	104 -	2
AN3057-12A	R17A2301-10	34 - 19	19
AN3057-16A	R17A2302-50		2
AN3057-20A	R17A2303-10	98 - 3	1
AN3057-4A	R17A2296-10	104 - 19	5
AN3057-6A	R17A2297-10	7 - 47	4
AN3058-10	R17C37048-5	101 - 44	9
AN3058-16	R17C37050	4 -	1
AN3058-3	R17C37044	101 - 49	1
AN3058-4	R17C37045-5	101 - 48	4
AN3058-6	R17C37046-5		2
AN3061-16	R17C37093-36	46 - 16	2
AN3061-20	R17C37093-44	46 - 13	2
AN3061-32	R17C37093-68	47 - 12	2
AN3064-10	R17C30387	141 - 41	2
AN3064-12	R17C30388	137 -104	3
AN3064-16	R17C30390	46 - 15	4
AN3064-20	R17C30393	98 - 38	10
AN3064-24	R17C30394		1
AN3066-10	R17N1036-5	101 - 44	8
AN3066-12	R17N1037	101 - 2	7
AN3066-16	R17N1038	4 -	10
AN3066-20	R17N1039-5	46 - 13	12
AN3066-3	R17N1033	101 - 49	1
AN3066-32	R17N1043	47 - 12	2
AN3066-4	R17N1034-5	101 - 43	5
AN3066-6	R17N1034-10		4
AN3066-8	R17N1035-5	13 - 5	3
AN310-10	R43N20640		6
AN310-3	R43N20605	19 - 30	18
AN310-4	R43N20610	10 - 42	27
AN310-5	R43N20615	88 - 5	12
AN310-6	R43N20620	29 - 5	10
AN310-7	R43N20625	23 - 3	8
AN310-8	R43N20630	88 - 9	5
AN310C4	R43N20710	46 -136	8
AN3100-12S3S	R17R1270-25	137 - 66	1
AN3100-14S2P	R17R1280-10	137 - 79	2
AN3100-18-1S	R17RU295-5	104 - 76	5
AN3100-20-7S	R17R1305-75	137 - 82	1
AN3100-22-14S	R17R1322-5	13 - 3	7
AN3100-22-19S	R17R1323-5	104 - 17	17
AN3100-24-28S	R17R1327-150	102 - 14	1
AN3100-28-15S	R17R1347-36	102 - 60	2
AN3100-28-21S	R17R1347-65	137 -102	1
AN3100-36-7S	R17R1406-5	137 - 55	1
AN3100-8S1S	R17R1250-5	128 - 56	1
AN3100C28-15P	R17AN-3100C28-15P	102 - 13	2

PART NUMBER	STOCK NUMBER	FIGURE & INDEX NO.	QTY. PER A/C
AN3100M14S6P		137 - 81	1
AN3100M18-13P		137 - 54	1
AN3100M20-27P		102 - 16	1
AN3100M22-14P		13 - 2	4
AN3100M24-28P		102 - 32	1
AN3100M28-12P		102 - 24	4
AN3100M28-12PW		98 - 15	2
AN3100M28-15P		102 - 36	5
AN3100M28-15PW		102 - 5	2
AN3100M28-15RX		102 - 59	2
AN3100M28-15PY		102 - 57	2
AN3100M28-22P		137 - 53	1
AN3100M32-7P		102 - 29	4
AN3100M32-7PY		103 - 56	1
AN3100M36-7P		103 - 58	1
AN3101-10SL4P	R17AN-3101-10SL4P	89 - 1	1
AN3102-14S2P	R17R1480-10	79 - 34	1
AN3102-14S5P	R17R1480-40	74 - 7	1
AN3102-16S1P	R17R1490	82 - 5	1
AN3102-18-1P	R17R1495-8	76 - 1	3
AN3102-20-27S	R17R1505-5	103 - 2	6
AN3102-20-33P		79 - 10	1
AN3102-20-7P	R17R1505-60	80 - 2	1
AN3102-22-14P	R17R1515-113	85 - 3	4
AN3102-22-4P	R17R1515-25	74 - 35	1
AN3102-24-28P	R17R1525-230	78 - 1	4
AN3102-24-28PW		79 - 50	1
AN3102-28-15P	R17R1547-59	77 - 1	2
AN3102-28-21P	R17R1547-20	74 - 46	1
AN3106-10SL3S	R17P4425-630	104 - 67	4
AN3106-22-19P	R17P4426-399	150 - 1	1
AN3106-28-12S	R17P4426-693	98 - 14	1
AN3106-28-15SX		104 - 73	1
AN3106A16-11S	R17P4425-988	104 -	2
AN3106M16S4S	R17AN-3106M16S4S	137 - 83	1
AN3106M18-1S	R17AN-3106M18-1S	137 - 50	1
AN3106M18-13S	R17AN-3106M18-13S	193 - 15	3
AN3106M20-16S		103 - 35	1
AN3106M20-27S		102 - 12	3
AN3106M20-33P		42 - 13	2
AN3106M20-33S		103 - 17	1
AN3106M22-14P	R17AN-3106M22-14P	102 - 50	1
AN3106M22-14S	R17AN-3106M22-14S	34 - 13	4
AN3106M22-14SX		102 - 44	1
AN3106M24-20S		104 - 31	1
AN3106M24-20SX		103 - 42	1
AN3106M24-28S		103 - 37	3
AN3106M28-12S	R17AN-3106M28-12S	103 - 31	6
AN3106M28-12SW	R17AN-3106M28-12SW	98 - 36	3
AN3106M28-12SX		103 - 34	1
AN3106M28-12SY		103 - 33	1
AN3106M28-15S		104 - 51	1
AN3106M28-15SW		104 - 6	2
AN3106M28-15SX		104 - 86	2
AN3106M28-15SY		104 - 70	2
AN3106M28-22S		193 - 14	3
AN3106M32-7S		103 - 6	4
AN3106M32-7SW		103 - 21	1
AN3106M32-7SX		103 - 20	1
AN3106M32-7SY		103 - 19	1
AN3106M36-7P		193 - 8	1
AN3106M36-7S		103 - 22	1
AN3107-20-27S	R17P4428-490	34 - 19	12
AN3108-16S1S	R17P4430-511	98 - 37	1
AN3108B22-14P	R17P4430-900-15	75 - 23	1
AN3108M18-4S		137 - 52	1
AN3114-1B	R17R1640-10	15 - 22	2
AN3115-1	R17R1650	68 - 8	1
AN3117-1	R82R73500	108 - 62	7
AN3124-307	R17L5100-MA-230	101 - 16	1
AN3140-327	R17L2126	79 -	7
AN315-3L	R43N53011	54 - 8	7
AN315-3R	R43N53013	33 - 8	8
AN315-4L	R43N53017	54 - 36	1
AN315-4R	R43N53019	56 - 34	7
AN315-5R	R43N53025	45 -	1
AN315-6R	R43N53031	58 - 5	1
AN3150-2	R17B6660-75	96 - 17	1
AN3151-2	R17B6650	96 - 17	1
AN3156-3	R17C9650-25	96 - 9	2
AN3158-1	R17L11779-14	142 - 7	2
AN316-10R	R43N25042	116 - 51	4
AN316-4R	R43N25006	4 -	30
AN316-5R	R43N25012	10 - 9	22
AN316-6R	R43N25018	10 - 29	59
AN316-7R	R43N25024	146 -111	6
AN316-8R	R43N25030	11 - 12	19
AN316-9R	R43N25036	155 - 4	2
AN316C7R			2
AN3160-10	R17C9202-8		2
AN3160-5	R17C9198-8		1
AN3161P10	R17C9179-60		3
AN3161P15	R17C9179-70		3
AN3161P20	R17C9179-80		7
AN3161P25	R17C9179-90		5
AN3161P5	R17C9179-50		39

PART NUMBER	STOCK NUMBER	FIGURE & INDEX NO.	QTY. PER A/C
AN3166-1	R17A98		2
AN3167-1	R17A94-85	101 - 32	1
AN3168-2	R17A94	101 - 37	1
AN3169-1	R17A92-125	94 - 47	2
AN3178-1	R17C34150	79 - 64	1
AN3198-5	R42S30120-20		2
AN320-12	R43N22650	57 - 31	9
AN320-14	R43N22655	2 - 9	2
AN320-3	R43N22610	16 - 2	25
AN320-4	R43N22615	10 - 23	75
AN320-5	R43N22620	55 -132	5
AN320-6	R43N22625	8 - 21	60
AN320-7	R43N22630	178 - 42	6
AN320-8	R43N22635	2 - 8	456
AN320C3	R43N22710		5
AN320C5	R43N22720	181 - 12	4
AN320C6		185 - 21	2
AN3200-450	R17S7135-10	137 - 58	1
AN3202-1	R17V854	80 - 5	1
AN3210-1	R17S25083	86 - 37	6
		94 - 49	
		101 - 30	
		101 - 37	
AN3211-1	R17S25885	80 - 13	1
AN3216-1	R17S25109-174	86 - 38	2
		101 - 32	
AN3220-3	R17K1726	80 - 12	3
		128 - 57	
AN3224-2	R17B23889	101 - 51	1
AN3226-1	R17S28283-70	74 - 37	5
		79 - 51	
		80 - 10	
		80 - 11	
AN3226-3	R17S28283-77	74 - 40	1
AN3227-3	R17S28242-20	77 - 8	3
AN3227-7	R17S28242-22	81 - 23	1
AN3229-1	R17G8825	77 - 11	2
AN3234-1	R17S25132-10	85 - 14	6
		85 - 16	
		104 - 23	
AN3249-1	R16J2164	79 - 6	4
		95 - 74	
		128 - 54	
AN3249-2	R16J2162	79 - 7	4
		95 - 73	
		128 - 55	
AN3303-1	R17R5899-52	101 - 22	5
		101 - 26	
		101 - 27	
AN3310-1	R17R5899-35	101 - 33	19
		101 - 34	
		101 - 55	
		101 - 56	
		136 - 30	
		136 - 31	
		136 - 32	
		160 - 19	
AN3311-1	R17R5677-172	95 - 25	17
		95 - 41	
		95 - 67	
		95 - 73	
		97 - 6	
		97 - 7	
		97 - 8	
		97 - 9	
		99 - 6	
AN3312-1	R17R5677-173	95 - 24	9
		95 - 55	
		95 - 88	
		100 - 3	
		136 - 26	
		136 - 27	
		160 - 19	
		160 - 20	
AN3320-1	R17R5882-70	97 - 5	1
AN3350-2	R17R5893-25	95 - 65	1
AN3352-1	R17R5677-120	95 - 64	3
		95 - 80	
AN3353-1	R17R5854-150	95 - 91	1
AN3354-1	R17R5673-85	95 - 69	1
AN3370-2	R17R5886-93	95 - 52	3
		128 - 51	
AN340-4	R43N41015		12
AN340-8	R43N41030	81 - 77	4
AN341-10	R43N28815		48
AN341-6	R43N28805	99 - 23	2
AN341-616	R43N28830		2
AN341-8	R43N28810		10
AN3432-10-13		13 - 18	24
AN3432-10-20	R17S2829-7	98 - 8	4
AN3432-10-22		13 - 21	14
AN3433-2-2		101 - 25	5
AN3433-4-2		95 - 90	22
AN3433-4-3		101 - 18	2
AN3434-1	R17S17005	105 - 3	4
AN3434-2	R17S16960	105 - 3	1

PART NUMBER	STOCK NUMBER	FIGURE & INDEX NO.	QTY. PER A/C
AN3436-10-2		101 - 36	1
AN3436-2-1		49 - 9	5
AN3436-2-10	R17P439-250	105 - 17	1
AN3436-2-2	R17P439-241		1
AN3436-2-3		101 - 25	1
AN3436-2-4	R17P439-243	105 - 32	2
AN3436-2-5	R17P439-244	105 - 3	2
AN3436-2-6		101 - 20	4
AN3436-2-9		105 - 48	1
AN3436-4-1		99 - 10	4
AN3436-4-8	R17P439-450		6
AN3436-6-1		137 - 96	1
AN3437-2-10		13 - 37	2
AN3437-2-11		13 - 23	2
AN345-10	R43N43532	13 - 15	45
AN350-632	R43N99200	99 - 23	2
AN362F1032	R43N96400-730		10
AN363-1018	R43N95940-2900	144 - 17	3
AN363-1032	R43N95940-1910	84 - 18	276
AN363-428	R43N95940-2200	194 - 8	24
AN363-524	R43N95940-2400	36 -	34
AN363-632	R43N95940-1890	105 - 2	18
AN363-720	R43N95940-2600	157 - 2	2
AN363C1018	R43N97525-140	194 - 13	12
AN363C1032	R43N97525-105		2
AN363C624	R43N97525-120	194 - 38	4
AN363C918	R43N97525-135	194 - 11	4
AN364-1018	R43N98215	28 - 42	51
AN364-1032	R43N98180	4 -	3066
AN364-1216	R43N98220	138 - 28	44
AN364-1414	R43N98225	39 - 2	35
AN364-1614	R43N98230	10 - 2	2
AN364-1812	R43N98235	179 - 3	2
AN364-2012	R43N98240	185 - 1	1
AN364-428	R43N98185	2 - 5	1159
AN364-524	R43N98190	20 - 17	538
AN364-624	R43N98195	15 - 12	284
AN364-628			2
AN364-632	R43N98150	65 -	340
AN364-720	R43N98200	37 - 22	124
AN364-820	R43N98205	3 - 17	159
AN364-832	R43N98155	81 - 77	66
AN364-918	R43N98210	39 - 1	49
AN364B1032	R43N98048	51 - 41	47
AN365-1018	R43N97443-10	14 - 62	35
AN365-1032	R43N97415-10	3 - 5	6371
AN365-1216	R43N97445-10	28 - 43	2
AN365-1614	R43N97449-10	178 - 56	2
AN365-416			8
AN365-426			19
AN365-428	R43N97420-10	3 -	2305
AN365-440	R43N97200	39 -	954
AN365-524	R43N97425-10	18 - 34	479
AN365-624	R43N97430-10	8 - 2	168
AN365-632	R43N97205	42 -	130
AN365-720	R43N97435-10	18 - 74	54
AN365-820	R43N97440-10	3 -	179
AN365-832	R43N97210	42 -	86
AN365-918	R43N97442-10	14 - 39	105
AN365B1032	R43N94554	53 -	17
AN365B624	R43N94566	96 -	20
AN365B632	R43N94504	81 -	5
AN365B820	R43N94574		16
AN365B832	R43N94508	39 -	9
AN366DF1032	R43N65210		15
AN366F1032	R43N93020		1135
AN366F428	R43N93030		140
AN366F524	R43N91110		29
AN366F624	R43N91120		9
AN366F632	R43N92600		21
AN366F832	R43N92605		11
AN373F1032	R43N93846		125
AN373F428	R43N93890		10
AN373F524	R43N93899-50		6
AN380-2-1	R42P5415	25 - 6	57
AN380-2-2	G42P5420	19 - 17	356
AN380-2-3	R42P5435	10 - 41	52
AN380-2-4	G42P5450	10 - 23	64
AN380-3-2	R42P5500	138 - 24	5
AN380-3-3	G42P5520	8 - 22	21
AN380-3-4	R42P5540	23 - 3	23
AN380-3-5	G42P5550	2 - 8	88
AN380-4-3			1
AN380-4-4	G42P5640	178 - 70	2
AN380-4-6	G42P5670	184 - 48	2
AN380-4-7	G42P5680	57 - 31	6
AN380-4-8	G42P5690	2 - 9	4
AN380C2-6		134 - 28	8
AN381-1-6	R42P6585	85 - 11	2
AN381-2-10	R42P6640	53 - 16	22
AN381-2-12	R42P6645	46 -136	9
AN381-2-5	R42P6628	12 - 1	6
AN381-2-6		175 - 6	2
AN381-2-7	R42P6632	45 - 18	4
AN381-2-8	R42P6635	23 - 35	36
AN381-3-12	R42P6690	185 - 21	2
AN381-3-14	R42P6692	169 - 5	32
AN381-3-16	R42P6695	7 - 53	12
AN381-3-18	R42P6695-15	180 - 19	2
AN381-4-20	R42P6740	156 - 6	1
AN381-4-22	R42P6742		2
AN392-11	R42P9104	19 - 17	4
AN392-23	R42P9116	194 - 20	5
AN392-29	R42P9122	119 - 5	2
AN392-35	R42P9128	164 - 21	4
AN392-51	R42P9144	105 - 85	2
AN392-61	R42P9154	12 - 2	4
AN392-67	R42P9160	108 -	3
AN393-11	R42P9206	52 - 33	16
AN393-13	R42P9208	19 - 19	31
AN393-15	R42P9210	54 - 20	8
AN393-17	R42P9212	54 - 29	11
AN393-19	R42P9214	48 - 3	45
AN393-21	R42P9216	54 - 75	59
AN393-23	R42P9218	156 - 29	14
AN393-25	R42P9220	25 - 6	18
AN393-27	R42P9224	85 - 32	1
AN393-29	R42P9226	45 - 18	29
AN393-31	R42P9228	52 - 16	3
AN393-33	R42P9230	45 - 48	10
AN393-35	R42P9232	84 - 7	9
AN393-37	R42P9234		1
AN393-41	R42P9238	64 -	24
AN393-43	R42P9240	54 - 5	10
AN393-45	R42P9242	62 - 11	4
AN393-47	R42P9244		2
AN393-49	R42P9246	84 - 9	4
AN393-53	R42P9250	48 - 19	8
AN393-55	R42P9252	147 - 24	3
AN393-61	R42P9258	75 - 9	1
AN393-63	R42P9260	64 -	2
AN393-69	R42P9266	64 -	2
AN393-7	R42P9202	19 - 25	16
AN393-73	R42P9270	84 - 8	4
AN393-9	R42P9204	87 - 5	4
AN394-17	R42P9356	96 - 13	4
AN394-19	R42P9358	23 - 35	5
AN394-23	R42P9362	48 - 15	23
AN394-25	R42P9364	50 - 14	2
AN394-27	R42P9366	178 - 7	2
AN394-29	R42P9368	69 -	4
AN394-31	R42P9370	53 - 16	4
AN394-33	R42P9372		4
AN394-35	R42P9374	54 - 50	1
AN394-37	R42P9376	130 -	28
AN394-39	R42P9378	167 - 2	24
AN394-43	R42P9382	91 - 23	1
AN394-51	R42P9390	167 - 5	42
AN394-59	R42P9398	53 - 51	1
AN394-61	R42P9400	53 - 57	2
AN395-35	R42P9522	19 - 13	4
AN395-49	R42P9536	138 - 24	1
AN395-81	R42P9568		2
AN395-89	R42P9576	179 - 7	2
AN396-17	R42P9702	178 - 27	2
AN396-73	R42P9758	7 - 53	12
AN397-31	R42P9916	184 - 11	2
AN4-10A	R43B77732	5 -	428
AN4-11A	R43B77738	4 - 16	161
AN4-12	R43B77742	79 - 35	7
AN4-12A	R43B77744	4 - 15	124
AN4-13A	R43B77750	18 - 44	16
AN4-14	R43B77754	46 - 25	11
AN4-14A	R43B77756	20 - 79	69
AN4-15A	R43B77762	16 - 18	43
AN4-16A	R43B77768	18 - 77	36
AN4-17A	R43B77774	32 - 43	17
AN4-20A	R43B77780	28 - 65	10
AN4-21A	R43B77786	9 - 2	25
AN4-22A	R43B77792	120 -143	14
AN4-23A	R43B77798	54 - 46	14
AN4-24	R43B77802		2
AN4-24A	R43B77804	3 -	17
AN4-25A	R43B77810	3 -	14
AN4-26A	R43B77816	6 - 2	31
AN4-27A	R43B77822	147 - 2	7
AN4-3A	R43B77702	132 -	8
AN4-30A	R43B77828	147 - 37	1
AN4-31A	R43B77834	166 - 55	2
AN4-32A	R43B77840	35 - 25	6
AN4-34	R43B77850		7
AN4-34A	R43B77852		2
AN4-35A	R43B77858	166 - 54	4
AN4-36A	R43B77864	147 - 44	3
AN4-4A	R43B77708	65 -	30
AN4-46A	R43B77912	175 - 5	2
AN4-47	R43B77916	75 - 27	1
AN4-5A	R43B77714	18 -	111
AN4-50A	R43B77924		1
AN4-51A	R43B77930	53 - 31	1
AN4-52A	R43B77936		1
AN4-53A	R43B77942	187 - 7	4

PART NUMBER	STOCK NUMBER	FIGURE & INDEX NO.	QTY. PER A/C
AN4-6A	R43B77720	5 -	340
AN4-7	R43B77724	147 - 51	1
AN4-7A	R43B77726	4 -	640
AN4CH14A		192 -	24
AN4CH16A		190 -	12
AN4H10A	R43B85055	36 -	186
AN4H11A	R43B85057	36 -	60
AN4H12A	R43B85059		48
AN4H13A	R43B85061	119 - 46	3
AN4H14A	R43B85063	119 -	2
AN4H16A	R43B85067		3
AN4H22A	R43B85077		16
AN4H3A	R43B85043-12	120 - 52	1
AN4H4A	R43B85043-15	36 -	30
AN4H5A	R43B85043-20	35 - 63	556
AN4H6A	R43B85045	18 - 8	312
AN4H7A	R43B85048	35 - 69	340
AN4047-1	R85G25710	190 - 6	10
AN4052-1	R83B752100	190 - 7	2
AN4132-1		121 - 66	1
AN4144-1	R85G35100	190 - 11	2
AN42-14A	R43B63042		1
AN42-22	R43B63064	19 - 30	2
AN42-23A			2
AN42-25A		33 - 7	2
AN42-4A	R43B63010		1
AN42-5A	R43B63014		1
AN42-6	R43B63016	88 - 24	1
AN426AD2-16			
AN426AD2-2	R43R80020		
AN426AD2-3	R43R80022		
AN426AD2-5	R43R80026		
AN426AD2-7	R43R80030		
AN426AD2-9	R43R80034		
AN426AD3			
AN426AD3-10	R43R80076		
AN426AD3-11	R43R80077		
AN426AD3-12	R43R80078		
AN426AD3-13			
AN426AD3-14	R43R80080		
AN426AD3-16	R43R80082		
AN426AD3-18	R43R80086		
AN426AD3-2	R43R80060		
AN426AD3-2.5			
AN426AD3-3.5	R43R80064		
AN426AD3-4	R43R80064		
AN426AD3-5	R43R80066		
AN426AD3-6	R43R80068		
AN426AD3-7	R43R80070		
AN426AD3-8	R43R80072		
AN426AD3-9	R43R80074		
AN426AD4-10	R43R80124		
AN426AD4-11	R43R80125		
AN426AD4-12	R43R80126		
AN426AD4-13			
AN426AD4-14	R43R80128		
AN426AD4-16	R43R80130		
AN426AD4-18	R43R80132		
AN426AD4-24	R43R80138		
AN426AD4-28	R43R80140		
AN426AD4-3	R43R80110		
AN426AD4-3.5	R43R80112		
AN426AD4-32			
AN426AD4-4	R43R80112		
AN426AD4-5	R43R80114		
AN426AD4-6	R43R80116		
AN426AD4-7	R43R80118		
AN426AD4-8	R43R80120		
AN426AD4-9	R43R80122		
AN426AD5-10	R43R80182		
AN426AD5-11	R43R80183		
AN426AD5-12	R43R80184		
AN426AD5-14	R43R80186		
AN426AD5-15			
AN426AD5-16	R43R80188		
AN426AD5-18	R43R80190		
AN426AD5-20	R43R80192		
AN426AD5-22	R43R80194		
AN426AD5-28	R43R80198		
AN426AD5-3	SUB R43R80173		
AN426AD5-32	R43R80200		
AN426AD5-4	R43R80170		
AN426AD5-5	R43R80172		
AN426AD5-6	R43R80174		
AN426AD5-7	R43R80176		
AN426AD5-8	R43R80178		
AN426AD5-9	R43R80180		
AN426AD8-8	R43R80294		
AN426A3-5	R43R26393		
AN426A3-6	R43R26397		
AN426A4-7	R43R26442		
AN426A4-8			
AN426B10-32			
AN426B3-12	R43R81078		
AN426B3-14	R43R81080		
AN426B3-16	R43R81082		

PART NUMBER	STOCK NUMBER	FIGURE & INDEX NO.	QTY. PER A/C
AN426B3-3	R43R81062		
AN426B3-4	R43R81064		
AN426B3-5	R43R81066		
AN426B3-6	R43R81068		
AN426B3-7	R43R81070		
AN426B3-8	R43R81072		
AN426B3-9	R43R81074		
AN426B4-10	R43R81124		
AN426B4-14			
AN426B4-16	R43R81130		
AN426B4-18	R43R81132		
AN426B4-20	R43R81134		
AN426B4-28	R43R81140		
AN426B4-4	R43R81112		
AN426B4-5	R43R81114		
AN426B4-6	R43R81116		
AN426B4-7	R43R81118		
AN426B4-8	R43R81120		
AN426B4-9	R43R81122		
AN426B5-10	R43R81182		
AN426B5-12	R43R81184		
AN426B5-13			
AN426B5-14	R43R81190		
AN426B5-16	R43R81188		
AN426B5-18	R43R81190		
AN426B5-20	R43R81192		
AN426B5-5	R43R81172		
AN426B5-6	R43R81174		
AN426B5-7	R43R81176		
AN426B5-8	R43R81178		
AN426B5-9	R43R81180		
AN426B6-11			
AN426B6-12	R43R81242		
AN426B6-14	R43R81244		
AN426B6-16	R43R81246		
AN426B6-18			
AN426B6-20	R43R81250		
AN426B6-22			
AN426B6-40	R43R81260		
AN426B6-6	R43R81232		
AN426B6-7	R43R81234		
AN426B6-8	R43R81236		
AN426B6-9	R43R81238		
AN426B8-10	R43R81298		
AN426B8-12	R43R81300		
AN426B8-24	R43R81312		
AN426B8-8	R43R81294		
AN426B8-9	R43R81296		
AN426DD10-10			
AN426DD10-11			
AN426DD10-12			
AN426DD10-14			
AN426DD10-18			
AN426DD10-9			
AN426DD12-10			
AN426DD12-12			
AN426DD12-16			
AN426DD12-18			
AN426DD12-19			
AN426DD12-22	R43R83416		
AN426DD6-10	R43R83240		
AN426DD6-11	SUB R43R83242		
AN426DD6-12	R43R83242		
AN426DD6-13	SUB R43R83244		
AN426DD6-14	R43R83244		
AN426DD6-17			
AN426DD6-19			
AN426DD6-20	R43R83250		
AN426DD6-22			
AN426DD6-24	R43R83254		
AN426DD6-28	R43R83256		
AN426DD6-4	SUB R43R83230		
AN426DD6-40	R43R83260		
AN426DD6-5	R43R83230		
AN426DD6-6	R43R83232		
AN426DD6-7	R43R83234		
AN426DD6-8	R43R83236		
AN426DD6-9	R43R83238		
AN426DD8-10	R43R83298		
AN426DD8-11	SUB R43R83300		
AN426DD8-12	R43R83300		
AN426DD8-13			
AN426DD8-14	R43R83302		
AN426DD8-15			
AN426DD8-16	R43R83304		
AN426DD8-18	R43R83306		
AN426DD8-20	R43R83308		
AN426DD8-40	R43R83318		
AN426DD8-6	R43R83290		
AN426DD8-7	R43R83292		
AN426DD8-8	R43R83294		
AN426DD8-9	R43R83296		
AN427-3-14			
AN427-3-3	R43R295337		
AN427-3-5	R43R295343		
AN427-3-7			

PARTS WITHOUT QUANTITIES ARE PAN STOCKED AT CONTRACTOR'S PLANT; THEREFORE, TOTALS ARE UNAVAILABLE.

PART NUMBER	STOCK NUMBER	FIGURE & INDEX NO.	QTY. PER A/C
AN427-4-10	R43R295398		
AN427-4-12	R43R295401		
AN427-4-16	R43R295407		
AN427-4-4	R43R295380		
AN427-4-6	R43R295386		
AN427-4-7	R43R295389		
AN427-4-8	R43R295392		
AN427-5-12			
AN427-5-16			
AN427-5-5	R43R295435		
AN427-5-6	R43R295438		
AN427-5-8	R43R295444		
AN427-6-10			
AN427-6-14	R43R295508		
AN427-6-24	R43R295523		
AN427-6-8	R43R295496		
AN427F10-32			
AN427F3-4	R43R343040		
AN427F3-5	R43R343043		
AN427F3-6			
AN427F3-8	R43R343052		
AN427F4-10	R43R343098		
AN427F4-12	R43R343101		
AN427F4-14	R43R343104		
AN427F4-18			
AN427F4-24			
AN427F4-4	R43R343080		
AN427F4-5	R43R343083		
AN427F4-6	R43R343086		
AN427F4-7	R43R343089		
AN427F4-8	R43R343092		
AN427F4-9	R43R343095		
AN427F5-10	R43R343150		
AN427F5-24			
AN427F5-4	R43R343132		
AN427F5-5	R43R343135		
AN427F5-6			
AN427F5-7	R43R343141		
AN427F5-8	R43R343144		
AN427F5-9			
AN427F6-10			
AN427F6-12			
AN427F6-24			
AN427F6-6	R43R343190		
AN427F6-7	R43R343193		
AN427F6-8	R43R343196		
AN427F6-9	R43R343199		
AN427F8-14			
AN427F8-22			
AN427F8-24	R43R343278		
AN427M3-5	R43R301597		
AN427M4-10	R43R301652		
AN427M4-12	R43R301655		
AN427M4-14			
AN427M4-16	R43R301661		
AN427M4-18			
AN427M4-22			
AN427M4-4	R43R301637		
AN427M4-5	R43R301640		
AN427M4-6	R43R301641		
AN427M4-7	R43R301643		
AN427M4-8	R43R301646		
AN427M4-9			
AN427M5-5	R43R301690		
AN427M5-7	R43R301696		
AN427M5-8	R43R301699		
AN427M6-6	R43R301738		
AN427M6-7	R43R301741		
AN43-17A		174 - 14	2
AN435-3-10	R43R291072		
AN435-3-10P	R43R290102		
AN435-3-16P	R43R290108		
AN435-3-3			
AN435-3-4P	R43R290092		
AN435-3-5P	R43R290094		
AN435-3-6P	R43RI90096		
AN435-3-7P	R43R290098		
AN435-3-8P	R43R290100		
AN435-4-10P	R43R290142		
AN435-4-11P			
AN435-4-12P	R43R290144		
AN435-4-18P			
AN435-4-21P			
AN435-4-3P			
AN435-4-4P	R43R290132		
AN435-4-5P	R43R290134		
AN435-4-6P	R43R290136		
AN435-4-7P	R43R290138		
AN435-5-10P	R43R290186		
AN435-5-14P	R43R290190		
AN435-5-4P			
AN435-5-5P			
AN435-5-7P	R40R290182		
AN435-5-8P	R43R290184		
AN435-6-18P			
AN435-6-4P			

PART NUMBER	STOCK NUMBER	FIGURE & INDEX NO.	QTY. PER A/C
AN435-6-5P	R43R290228		
AN435-6-6P	R43R290230		
AN435-6-7P	R43R290232		
AN435-6-8P	R43R290234		
AN435F3-3			
AN435F3-4			
AN435F3-5	R43R304405-20		
AN435F3-8			
AN435F4-10			
AN435F4-12	R43R303704		
AN435F4-20			
AN435F4-3			
AN435F4-4	R43R303694		
AN435F4-5	R43R303696		
AN435F4-6	R43R303698		
AN435F4-7			
AN435F4-8			
AN435F5-16			
AN435F5-24			
AN435F5-5	R43R304185		
AN435F5-6	R43R304190		
AN435F5-7			
AN435F6-10	R43R304265		
AN435F6-12			
AN435F6-14	R43R304430-45		
AN435F6-4			
AN435F6-6			
AN435F6-8			
AN435F8-24			
AN435M4-10	R43R304135		
AN435M4-4	R43R304110		
AN435M4-5	R43R304115		
AN435M4-6	R43R304120		
AN44-7A		41 - 22	2
AN450C12AD9			
AN450C6-8	R43R325040-25		
AN450C8-4	R43R325042		
AN450C8-5	R43R325043		
AN450C8-6	R43R325045		
AN450C8-9	R43R325045-15		
AN450C8AD10	R43R113000-26		
AN450C8AD6	R43R113000-18		
AN450C8AD7			
AN450C8AD8	R43R113000-22		
AN450D9-14	R43R306108-250		
AN450D9-16			
AN47-13	R43B65024	178 - 28	2
AN47-25	R43B65064	184 - 26	2
AN470AD3-10	R43R125004-42		
AN470AD3-11	SUB R43R125004-44		
AN470AD3-12	R43R125004-44		
AN470AD3-3	R43R125004-28		
AN470AD3-3.5			
AN470AD3-4	R43R125004-30		
AN470AD3-5	R43R125004-32		
AN470AD3-6	R43R125004-34		
AN470AD3-7	R43R125004-36		
AN470AD3-8	R43R125004-38		
AN470AD3-9	R43R125004-40		
AN470AD4-10	R43R125004-68		
AN470AD4-11	SUB R43R125004-70		
AN470AD4-12	R43R125004-70		
AN470AD4-14	R43R125004-72		
AN470AD4-16	R43R125004-74		
AN470AD4-20	R43R125004-78		
AN470AD4-22	R43R125004-80		
AN470AD4-3	R43R125004-55		
AN470AD4-4	R43R125004-56		
AN470AD4-40			
AN470AD4-5	R43R125004-58		
AN470AD4-6	R43R125004-60		
AN470AD4-7	R43R125004-62		
AN470AD4-8	R43R125004-64		
AN470AD4-9	R43R125004-66		
AN470AD5-10	R43R125004-96		
AN470AD5-11	SUB R43R125004-98		
AN470AD5-12	R43R125004-98		
AN470AD5-14	R43R125004-100		
AN470AD5-15	SUB R43R125004-102		
AN470AD5-16	R43R125004-102		
AN470AD5-18	R43R125004-104		
AN470AD5-20	R43R125004-106		
AN470AD5-3	SUB R43R125004-84		
AN470AD5-4	R43R125004-84		
AN470AD5-5	R43R125004-86		
AN470AD5-5.5			
AN470AD5-6	R43R125004-88		
AN470AD5-7	R43R125004-90		
AN470AD5-8	R43R125004-92		
AN470AD5-9	R43R125004-94		
AN470B3-14	R43R125002-105		
AN470B3-18			
AN470B3-20	R43R125002-120		
AN470B3-5	R43R125002-87		
AN470B3-6	R43R125002-89		

PARTS WITHOUT QUANTITIES ARE PAN STOCKED AT CONTRACTOR'S PLANT; THEREFORE, TOTALS ARE UNAVAILABLE.

PART NUMBER	STOCK NUMBER	FIGURE & INDEX NO.	QTY. PER A/C
AN470B3-7	R43R125002-93		
AN470B3-8	R43R125002-95		
AN470B4-10	R43R125002-163		
AN470B4-12	R43R125002-167		
AN470B4-16	R43R125002-171		
AN470B4-4	R43R125002-150		
AN470B4-5	R43RU25002-U53		
AN470B4-6	R43R125002-155		
AN470B4-7	R43R125002-158		
AN470B4-8	R43R125002-159		
AN470B4-9	R43R125002-161		
AN470B5-10	R43R125002-240		
AN470B5-12	R43R125002-245		
AN470B5-16	R43R125002-250		
AN470B5-28	R43R125002-265		
AN470B5-5	R43R125002-220		
AN470B5-6	R43R125002-225		
AN470B5-7	R43R125002-230		
AN470B5-8	R43R125002-235		
AN470B5-9	R43R125002-237		
AN470B6-10	R43R125002-315		
AN470B6-12	R43R125002-320		
AN470B6-14	R43R125002-325		
AN470B6-18			
AN470B6-32	R43R125002-360		
AN470B6-7	R43R125002-305		
AN470B6-8	R43R125002-310		
AN470B6-9	R43R125002-312		
AN470B8-16	R43R125002-415		
AN470B8-8	R43R125002-395		
AN470B8-9			
AN470DD10-10	R43R125006-449		
AN470DD10-11			
AN470DD10-12	R43R125006-451		
AN470DD10-15			
AN470DD10-20			
AN470DD10-8			
AN470DD10-9			
AN470DD12-12			
AN470DD12-16	R43R125006-610		
AN470DD12-20	R43R125006-630		
AN470DD12-24			
AN470DD12-8			
AN470DD6-10	R43R125006-320		
AN470DD6-11	SUB R43R125006-325		
AN470DD6-12	R43R125006-325		
AN470DD6-13	SUB R43R125006-330		
AN470DD6-14	R43R125006-330		
AN470DD6-15	SUB R43R125006-335		
AN470DD6-16	R43R125006-335		
AN470DD6-17	SUB R43R125006-338		
AN470DD6-19			
AN470DD6-20	R43R125006-340		
AN470DD6-24	R43R125006-345		
AN470DD6-28	R43R125006-354		
AN470DD6-4	R43R125006-296		
AN470DD6-40	R43R125006-358		
AN470DD6-5	R43R125006-298		
AN470DD6-6	R43R125006-300		
AN470DD6-7	R43R125006-305		
AN470DD6-8	R43R125006-310		
AN470DD6-9	R43R125006-315		
AN470DD8-10	R43R125006-400		
AN470DD8-11			
AN470DD8-12	R43R125006-406		
AN470DD8-15			
AN470DD8-16	R43R125006-412		
AN470DD8-18	R43R125006-416		
AN470DD8-6	R43R125006-380		
AN470DD8-7	R43R125006-385		
AN470DD8-8	R43R125006-390		
AN470DD8-9	R43R125006-395		
AN481-4P	R82C485107	33 - 6	3
AN486-1	R82C485199	96 - 12	2
AN486-4	R82C485203		1
AN490HT10P	R82AN-490HT10P	117 - 16	2
AN490HT15P		10 - 10	15
AN490HT6P	R82R690812	33 - 5	4
AN5-10	R43B78430	126 - 9	6
AN5-10A	R43B78432	20 - 17	51
AN5-11A	R43B78438	20 - 37	82
AN5-12A	R43B78444	18 - 75	51
AN5-13A	R43B78450	18 -106	38
AN5-14A	R43B78456	55 -139	6
AN5-15A	R43B78462		8
AN5-16A	R43B78468	23 - 13	12
AN5-17A	R43B78474	32 - 26	4
AN5-20A	R43B78480	53 - 62	2
AN5-21A	R43B78486	87 - 20	4
AN5-23A	R43B78498	150 - 8	2
AN5-27A	R43B78522	60 - 31	2
AN5-31A	R43B78534	60 - 29	4
AN5-37A	R43B78570		2
AN5-40A	R43B78576		2
AN5-44A	R43B78600	184 - 47	1

PART NUMBER	STOCK NUMBER	FIGURE & INDEX NO.	QTY. PER A/C
AN5-5A	R43B78414		30
AN5-51A	R43B78630		4
AN5-52A	R43B78636	87 - 11	4
AN5-6A	R43B78420	128 - 36	30
AN5-7	R43B78424	88 - 5	2
AN5-7A	R43B78426	36 -	49
AN5H10A	R43B85150-20	120 -103	12
AN5H4A	R43B85150-8		18
AN5H5A	R43B85150-10	120 - 37	20
AN5H6A	R43B85150-12	60 - 28	40
AN5H7A	R43B85150-14	120 - 76	16
AN500-10-12	R43S183668	119 - 54	18
AN500A10-5	R43S181582		3
AN500A10-6	R43S181586		3
AN500A4-6	R43S181428	192 -	16
AN500A516-7	R43S181714	95 -	3
AN500A6-10	R43S181470	83 - 14	6
AN500A6-20	R43S181488	99 - 23	2
AN500A6-22	R43S181502	65 - 31	4
AN500A6-4	R43S181450	65 - 42	9
AN500A6-7	R43S181462		4
AN500A8-12	R43S181542	54 - 92	2
AN500A8-14	R43S181546	54 - 92	2
AN500A8-5	R43S181522	99 - 21	4
AN500A8-7	R43S181530	134 - 32	8
AN500A8-8	R43S181534	91 - 2	8
AN501A6-4	R43S182460		4
AN502-10-10	R43S183182		11
AN502-10-4	R43S183170	28 -	15
AN502-10-6	R43S183174	35 -	17
AN502-10-8	R43S183178	92 - 17	5
AN502-416-16	R43S183256	180 - 11	2
AN502-516-16	R43S183318		4
AN507-440R10	R43S193850-534		4
AN507-440R12	R43S193850-538		4
AN507-440R24		7 - 50	4
AN507-440R3	R43S193850-510		8
AN507-440R6	R43S193850-522		4
AN507-440R7	R43S193850-526		12
AN507-632R10	R43S193850-934	49 - 2	20
AN507-632R14	R43S193850-942		4
AN507-632R16	R43S193850-946		1
AN507-632R20	R43S193850-954	87 - 13	4
AN507-632R28	R43S193850-970		1
AN507-632R5	R43S193850-918	79 -	4
AN507-632R6	R43S193850-922	74 -	136
AN507-632R7	R43S193850-926	77 -	28
AN507-632R8	R43S193850-930	80 -	87
AN507-832R10	R43S193900-140	42 - 6	24
AN507-832R12	R43S193900-150	95 -	28
AN507-832R18	R43S193900-175		12
AN507-832R20	R43S193900-180		4
AN507-832R7	R43S193900-115	95 -	12
AN507-832R8	R43S193900-120	75 - 7	8
AN507B632R5	R43S147056	81 -	24
AN507B632R6	R43S147059		11
AN507C632-4		191 - 17	8
AN508-6-4			2
AN508-8-6	R43S158330		10
AN509-10R10	R43S39520	3 - 5	3928
	R43S439002-22		
AN509-10R11	R43S39524	2 - 12	5563
	R43S439002-24		
AN509-10R12	R43S39528	14 - 24	2190
	R43S439002-26		
AN509-10R13	R43S39532	4 -	1546
	R43S439002-28		
AN509-10R14	R43S39536	18 - 60	277
	R43S439002-30		
AN509-10R15	R43S39538	14 -	270
	R43S439002-32		
AN509-10R16	R43S39540	41 -	186
	R43S439002-34		
AN509-10R17	R43S39545	51 - 36	60
	R43S439002-36		
AN509-10R18	R43S39550	18 - 63	53
	R43S439002-38		
AN509-10R19	R43S39552	18 - 30	86
	R43S439002-40		
AN509-10R20	R43S39554	19 - 22	45
	R43S439002-42		
AN509-10R21	R43S39565	19 - 35	27
	R43S439002-44		
AN509-10R22	R43S39570	18 - 36	54
	R43S439002-46		
AN509-10R23	R43S39575	185 - 29	44
	R43S439002-48		
AN509-10R24	R43S39580	75 - 20	6
	R43S439002-50		
AN509-10R25	R43S39583	149 - 2	1
	R43S439002-52		
AN509-10R26	R43S39585		4
	R43S439002-54		
AN509-10R27	R43S39590	166 - 47	1
	R43S439002-56		
AN509-10R28	R43S39595	173 - 38	2

PARTS WITHOUT QUANTITIES ARE PAN STOCKED AT CONTRACTOR'S PLANT; THEREFORE, TOTALS ARE UNAVAILABLE.

PART NUMBER	STOCK NUMBER	FIGURES & INDEX NO.	QTY. PER A/C
AN509-10R28	R43S439002-58		
AN509-10R29	R43S439002-60		2
AN509-10R31	R43S439002-64		16
AN509-10R32	R43S39600		1
	R43S439002-66		
AN509-10R4	R43S439002-10	18 - 25	84
AN509-10R40	R43S39620		2
	R43S439002-82		
AN509-10R5	R43S39500	108 -	22
	R43S439002-12		
AN509-10R6	R46S39504	7 - 21	112
	R43S439002-14		
AN509-10R7	R43S39508	5 -	255
	R43S439002-16		
AN509-10R8	R43S39512	3 -	357
	R43S439002-18		
AN509-10R9	R43S39516	7 - 20	348
	R43S439002-20		
AN509-416R10	R43S40010	39 - 15	112
	R43S439004-20		
AN509-416R11	R43S40015	14 - 30	134
	R43S439004-22		
AN509-416R12	R43S40020	2 - 11	470
	R43S439004-24		
AN509-416R13	R43S40025	4 -	1906
	R43S439004-26		
AN509-416R14	R43S40030	4 -	1509
	R43S439004-28		
AN509-416R15	R43S40035	14 - 12	489
	R43S439004-30		
AN509-416R16	R43S40040	18 - 49	189
AN509-416R17	R43S40045	18 - 50	64
AN509-416R18	R43S40050	22 - 35	41
	R43S439004-36		
AN509-416R19	R43S439004-38		36
AN509-416R20	R43S40060	4 -	40
	R43S439004-40		
AN509-416R21	R43S40065	18 -117	18
AN509-416R22	R43S40070	14 - 20	40
	R43S439004-44		
AN509-416R23	R43S40075	46 -118	4
AN509-416R24	R43S40080	14 - 22	60
	R43S439004-48		
AN509-416R25	R43S40082	14 - 19	10
	R43S439004-50		
AN509-416R26	R43S40085	53 - 7	2
	R43S439004-52		
AN509-416R28	R43S40090	53 - 24	10
	R43S439004-56		
AN509-416R41	R43S439004-82	185 - 39	1
AN509-416R7	R43S439004-14		12
AN509-416R8	R43S40000		1
	R43S439004-16		
AN509-416R9	R43S40005		20
	R43S439004-18		
AN509-516R12	R43S41015		48
	R43S439006-24		
AN509-516R13	R43S41020	108 -	76
	R43S439006-26		
AN509-516R14	R43S41025	14 - 25	92
	R43S439006-28		
AN509-516R15	R43S41030	14 - 15	127
	R43S439006-30		
AN509-516R16	R43S41035	4 - 46	124
	R43S439006-32		
AN509-516R17	R43S41040	14 - 11	105
	R43S439006-34		
AN509-516R18	R43S41045	14 - 7	34
	R43S439006-36		
AN509-516R19	R43S439006-38	14 - 8	24
AN509-516R20	R43S41055	14 - 9	11
	R43S439006-40		
AN509-516R21	R43S41060	18 -	2
	R43S439006-42		
AN509-516R22	R43S41065		2
	R43S439006-44		
AN509-516R23	R43S439006-46	18 - 34	4
AN509-516R24	R43S41075	18 - 33	4
	R43S439006-48		
AN509-516R30	R43S41090	91 - 25	5
	R43S439006-60		
		114 - 2	
AN509-516R33	R43S41098		2
	R43S439006-66		
AN509-516R35	R43S439006-70		1
AN509-516R37	R43S439006-74		2
AN509-516R38	R43S439006-76		1
AN509-616R15	R43S41320	4 - 45	160
	R43S439008-30		
AN509-616R16	R43S41325	4 -	16
	R43S439008-32		
AN509-616R17	R43S41330	114 - 1	4
	R43S439008-34		
AN509-616R18	R43S41335		8
	R43S439008-36		
AN509-616R20	R43S41345	18 -122	2

PART NUMBER	STOCK NUMBER	FIGURES & INDEX NO.	QTY. PER A/C
AN509-616R20	R43S439008-40		
AN509-616R23	R43S41360		4
	R43S439008-46		
AN509-616R24	R43S41365	88 -	4
	R43S439008-48		
AN509-616R34			2
AN509-616R38	R43S439008-76		2
AN509-916R14			1
AN509C10-10			19
AN509C10-11			3
AN509C10-12			146
AN509C10-13			10
AN509C10-15			8
AN509C10-6			39
AN509C10-8			12
AN509C10R11			122
AN509C416-14		46 - 88	4
AN509C416-16		46 - 89	4
AN509P10R11	R43S438905-40	81 -	2
AN509P10R13	R43S438905-50	81 -	4
AN509P10R17	R43S438905-70	51 - 43	27
AN509P10R20	R43S438905-85	51 - 41	14
AN509P10R8	R43S438905-25	53 - 11	31
AN509P10R9	R43S438905-30	39 -	30
AN510-10-16	R43S189612	95 -	4
AN515-4R10	R43S210174		41
AN515-4R12	R43S210178		6
AN515-4R14	R43S210182	46 -	20
AN515-4R20	R43S210190		2
AN515-4R24	R43S210194	7 - 51	2
AN515-4R5	R43S210158		11
AN515-4R6	R43S210162	68 -	220
AN515-4R7	R43S210166	39 -	367
AN515-4R8	R43S210170	85 - 35	207
AN515-6-18	R43S216308	94 - 48	2
AN515-6R10	R43S210326	33 - 13	17
AN515-6R12	R43S210330	190 -	1
AN515-6R14	R43S210334	42 -	5
AN515-6R16	R43S210338		6
AN515-6R18	R43S210340		2
AN515-6R20	R43S210342	46 -	8
AN515-6R24	R43S210346		4
AN515-6R28	R43S210350	115 - 30	2
AN515-6R30			3
AN515-6R32	R43S210354	86 - 39	6
AN515-6R4	R43S210304		2
AN515-6R5	R43S210310	105 - 70	14
AN515-6R6	R43S210314	65 -	277
AN515-6R7	R43S210318	68 -	121
AN515-6R8	R43S210322	136 -	4
AN515-8R10	R43S210390	42 -	27
AN515-8R12	R43S210394		3
AN515-8R14	R43S210398	42 -	73
AN515-8R16	R43S210402	74 -	8
AN515-8R18	R43S210404	99 - 7	8
AN515-8R20	R43S210406	105 -	1
AN515-8R24	R43S210410	72 - 12	4
AN515-8R4	R43S210370	95 -	2
AN515-8R5	R43S210374	160 -	18
AN515-8R6	R43S210378	81 -	60
AN515-8R7	R43S210382	42 -	61
AN515-8R8	R43S210386	95 -	22
AN515B6R10	R43S149314	81 -	3
AN515B6R12	R43S149318	81 -	2
AN515B6R14	R43S149322	81 -	2
AN515B6R16	R43S149326	81 -	12
AN515B6R18	R43S149328	76 - 4	26
AN515B6R20	R43S149330	81 -	30
AN515B6R24	R43S149334	81 -	11
AN515B6R28	R43S149338	81 - 38	2
AN515B6R40		76 - 7	6
AN515B6R6	R43S149302	81 -	4
AN515B6R7	R43S149306		1
AN515B6R8	R43S149310	84 -	3
AN515C6-6	R43S311234	131 -	24
AN515D6R8			2
AN520-3R6	R43S211062		16
AN520-3R8	R43S211070	83 -	8
AN520-6-4	R43S217390	68 - 3	2
AN526-632-5	R43S175054	81 - 8	8
AN526-832-8	R43S175146	81 - 77	4
AN526-836-12	R43S175698	74 -	1
AN530-4-4	R43S438050		18
AN530-4R6	R43S438214	142 -	4
AN535-00-2	G43S4940		2
AN535-00-3	G43S4941		4
AN5534-1	R88R0383-050-000	100 - 1	1
AN5538-1	R17T5538-1		3
AN5538-2	R17T5538-2		1
AN5544-3	R88G1320-050-000	190 - 16	1
AN5548-1	R17T5548-1		2
AN5548-2	R17T5548-2		1
AN5548-3	R17T5548-3		1
AN5548-4	R17T5548-4		2
AN565A4-3	R43S190098	81 -	2
AN565A8H3	R43S700980	82 - 17	2

PART NUMBER	STOCK NUMBER	FIGURE & INDEX NO.	QTY. PER A/C
AN565A8H4	R43S700982	56 - 14	1
AN565B8-3	R43S190050	151 - 33	1
AN565B8H4	R43S699835	78 -	1
AN565D10H7	R43S701326	134 - 16	4
AN565D8H4	R43S701308	74 -	6
AN565D8H6	R43S701312	82 - 12	3
AN5743L2	R88C583-011	81 - 30	1
AN5745L3	R88A0140-015-000	81 - 56	1
AN5760L4B	R88A0351-011-000	81 - 40	1
AN5766T3	R88C0779-525-000	73 - 40	1
AN5769-2A	R88G0615-015-000	69 - 36	9
		132 - 67	
		135 - 43	
		158 - 74	
AN5771-1A	R88G0518-010-000	135 - 48	4
AN5780T3	R88I1888-000-000	76 - 10	1
AN5785-1	R88T2650-000-000	33 - 12	4
AN5800-1	R88H0570-000-000	84 - 2	2
AN5813-1	R88T2875-000-000	68 - 2	1
AN5820T2	R88I3250-025-000	81 - 42	1
	R88I3250-000-000		
AN5823-1	R88C0195-000-000	84 - 1	2
AN5825-7	R88I0750-110-000	81 - 41	1
AN6-10A	R43B79126	37 - 23	9
AN6-11A	R43B79132	145 - 29	36
AN6-13A	R43B79144		4
AN6-14A	R43B79150	18 -107	24
AN6-15A	R43B79156		2
AN6-16	R43B79160	156 - 1	2
AN6-16A	R43B79162	18 - 79	4
AN6-17A	R43B79168	8 - 2	15
AN6-20A	R43B79174		2
AN6-21A	R43B79180	18 - 79	19
AN6-23A	R43B79192	180 - 34	2
AN6-24	R43B79196	194 - 6	2
AN6-25A	R43B79204	194 - 39	3
AN6-26A	R43B79210	54 - 2	1
AN6-30A	R43B79222	194 - 38	2
AN6-32	R43B79232	180 - 19	2
AN6-36A	R43B79258	180 - 84	2
AN6-44A	R43B79294	189 - 2	1
AN6-53A	R43B79336		16
AN6-6A	R43B79114		1
AN6-7A	R43B79120	15 - 12	5
AN6-8A			1
AN6H5A	R43B85160-10		4
AN6H56A		120 - 65	1
AN6H61A		120 -119	1
AN6016-2	R83RYY3272	67 - 9	5
	R83V90640		
AN6017-1	R83V90650	67 - 12	1
AN6018-1	R83V90660		1
AN6227B10	R33P492-655	27 - 10	160
AN6227B11	R33P492-660	152 - 8	5
AN6227B12	R33P492-665	11 - 16	138
AN6227B13	R33P492-670	12 - 5	14
AN6227B14	R33P492-675	110 - 40	9
AN6227B17	R33P492-690	30 - 15	14
AN6227B18	R33P492-695	149 - 5	2
AN6227B19	R33P492-700	24 - 16	16
AN6227B20	R33P492-705	29 - 35	6
AN6227B21	R33P492-710	154 - 16	3
AN6227B23	R33P492-720	12 - 10	17
AN6227B24	R33P492-725	30 - 12	10
AN6227B25	R33P492-730	29 - 16	17
AN6227B26	R33P492-735	24 - 12	4
AN6227B27	R33P492-740	31 - 12	15
AN6227B29	R33P492-750	29 - 21	6
AN6227B3	R33P492-620	134 - 42	1
AN6227B31	R33P492-760	186 - 17	3
AN6227B32	R33P492-765	12 - 25	7
AN6227B35	R33P492-780	144 - 21	1
AN6227B37	R33P492-790	157 - 21	4
AN6227B38	R33P492-795	145 - 17	4
AN6227B39	R33P492-800	151 - 29	1
AN6227B4	R33P492-625	154 - 20	2
AN6227B40	R33P492-805	185 - 79	1
AN6227B42	R33P492-815	151 - 31	1
AN6227B48	R33P492-845	180 - 64	2
AN6227B5	R33P492-630	180 - 61	9
AN6227B50	R33P492-855	185 - 55	1
AN6227B7	R33P492-640	110 - 42	100
AN6227B73	R33P492-967	134 - 18	2
AN6227B9	R33P492-650	12 - 7	25
AN6230B10	R33G1150-545	12 - 16	8
AN6230B13	R33G1150-560	144 - 13	1
AN6230B20	R33G1150-595	185 - 90	1
AN6230B21	R33G1150-600	180 - 58	2
AN6230B24	R33G1150-615	180 - 99	2
AN6230B25	R33G1150-620	185 - 78	1
AN6230B6	R33G1150-525	152 - 21	4
AN6230B7	R33G1150-530	29 - 18	8
AN6230B9	R33G1150-540	151 - 12	3
AN6231A1	R33S3-100	29 - 30	5
AN6231A11	R33S3-150		2
AN6231A13		12 - 13	4

PART NUMBER	STOCK NUMBER	FIGURE & INDEX NO.	QTY. PER A/C
AN6231A15	R33S3-170	29 - 13	4
AN6231A17	R33S3-180	145 - 13	3
AN6231A3	R33S3-110	24 - 6	10
AN6231A36		185 - 59	2
AN6231A39	R33S3-290	180 -102	2
AN6231A5	R33S3-120	157 - 12	2
AN6231A7	R33S3-130	31 - 7	5
AN6231A9	R33S3-140	144 - 10	1
AN6232-1	R33W620		2
AN6232C1-3/4		110 - 43	4
AN6232C1/4			1
AN6232C3-1/2		151 - 9	2
AN6232C3-15/16			2
AN6232C5		145 - 14	2
AN6232C5-1/8		186 - 22	1
AN6236-2		134 - 11	2
AN6238-1	R33G1260-105	134 - 12	8
AN6240-1	R83F300780	130 - 40	4
AN6244-10	R33G1004-28	12 - 15	8
AN6244-13	R33G1004-34	56 - 44	3
AN6244-24		180 -100	2
AN6244-7	R33G1004-22	29 - 17	8
AN6245B4		28 -124	4
AN6246-10	R33G1002-20	129 - 56	2
AN6246-11	R33G1002-22	187 - 2	1
AN6246-13	R33G1002-26	12 - 4	12
AN6246-17	R33G1002-34	129 - 49	4
AN6246-20	R33G1002-40	29 - 34	4
AN6246-23	R33G1002-46	12 - 9	16
AN6246-24	R33G1002-48	30 - 11	10
AN6246-25	R33G1002-50	157 - 7	9
AN6246-27	R33G1002-54	31 - 11	12
AN6246-29	R33G1002-58	157 - 34	2
AN6246-37	R33G1002-92	157 - 20	4
AN6246-47	R33G1003-10		2
AN6246-48	R33G1003-12	180 - 63	4
AN6246-9	R33G1002-18	12 - 6	16
AN6270-4-10		68 - 18	1
AN6270-4-10.5		68 - 16	1
AN6270-4-12.75		68 - 15	1
AN6270-4-13.5		68 - 17	1
AN6270-4-14		68 - 67	1
AN6270-4-14.25		68 - 66	1
AN6270-4-16		81 - 11	1
AN6270-4-18		81 - 12	1
AN6270-4-22		81 - 9	1
AN6270-4-23.5		68 - 14	1
AN6270-4-26		42 - 9	1
AN6270-4-32		95 - 44	1
AN6270-4-36		68 - 7	1
AN6277-4	R83KY10222-4	28 - 68	11
		28 - 82	
		70 - 6	
		135 - 38	
AN6277-8		70 - 50	1
AN6279-12CD	R83PANT-HPLVA2	131 - 71	2
		132 - 36	
AN6280-12	R45V4400-30	130 - 4	6
		131 - 47	
		132 - 34	
AN6280-4	R45V4400-15	27 - 51	17
		28 - 92	
		28 -111	
		69 - 32	
		132 - 2	
AN6280-6	R45V4400-20	131 -142	4
		132 - 40	
AN6280-8	R45V4400-25	131 -149	4
		132 - 43	
AN6285D1	R83B502900	69 - 38	3
AN6285D2	R83B503550	69 - 38	3
AN6287-1	R08V200	69 - 37	12
		132 - 66	
		135 - 41	
		158 - 94	
		180 - 44	
		185 - 73	
AN6289D10	R45N2394-30	128 - 13	2
		131 -155	
AN6289D12	R45N2394-35	130 - 92	50
AN6289D16	R45N2394-40	129 - 30	29
AN6289D4	R45N2394-10	28 - 19	438
AN6289D5	R45N2394-15	70 - 25	73
AN6289D6	R45N2394-20	27 - 28	75
AN6289D8	R45N2394-25	11 - 44	112
AN6290-10	R33G1151-180	128 - 9	5
AN6290-12	R33G1151-190	130 - 75	187
AN6290-16	R33G1151-200	129 - 30	71
AN6290-2	R33G1151-120	152 - 19	2
AN6290-20	R33G1151-210	134 - 15	4
AN6290-3	R33G1151-130	128 - 29	1
AN6290-4	R33G1151-140	24 - 9	960
AN6290-5	R33G1151-150	57 - 28	40
AN6290-6	R33G1151-160	27 - 30	173
AN6290-8	R33G1151-170	11 - 18	339
AN6291-10	R33G1105-70	128 - 13	1

PART NUMBER	STOCK NUMBER	FIGURE & INDEX NO.	QTY. PER A/C
AN6291-12	R33G1105-80	130 - 92	45
AN6291-16	R33G1105-90	129 - 30	30
AN6291-4	R33G1105-30	28 - 19	414
AN6291-5	R33G1105-40	70 - 25	9
AN6291-6	R33G1105-50	27 - 29	92
AN6291-8	R33G1105-60	11 - 44	105
AN6295-2	R83ELE720-2	128 - 26	1
		129 - 23	
AN6538-2	R83V65300	65 - 35	1
AN6538-3	R43F300535	65 - 51	1
AN658-3	R12T263	115 - 9	2
		138 -	
AN663C3	R12T193-10		2
AN664-2	R12T454-5	107 -	1
AN664-4	R12T454-15		4
AN664C2	R12T195-22	52 - 10	22
AN664C3	R12T195-30	73 -	18
AN664C4	R12T195-35	168 -	14
AN664C5	R12T195-45	147 -	1
AN665-21L	R82T120155	59 - 7	2
AN665-21R	R82T120160	94 - 9	4
AN666-2LH	R12T200	52 - 11	3
AN666-2RH	R12T201		4
AN666-3LH	R12T206	73 - 33	5
AN666-3RH	R12T207	115 - 8	6
AN666-4LH	R12T212		1
AN666-4RH	R12T213		1
AN667-2	R12T270		2
AN667-5	R12T276	147 -	1
AN668-2	R12T234		1
AN668-3	R12T236		3
AN669L4RH	R12T315	168 - 37	8
AN669S2LH	R12T300	91 - 15	1
AN669S2RH	R12T301	91 - 17	1
AN7-14A	R43B79844		8
AN7-24	R43B79890	23 - 3	4
AN7-47A		178 - 54	2
AN7-54A		23 - 31	4
AN7-7A	R43B79814		12
AN73-15	R43B48344	105 - 60	6
AN73-21	R43B48360	105 - 8	4
AN73-35	R43B48408	103 -	14
AN73-45	R43B48440	105 - 72	2
AN735D14	R42C18000-155		5
AN735D16	R42C18000-160		2
AN735D20	R42C18000-175		2
AN735D22	R42C18000-180	55 -148	3
AN735D24	R42C18000-190		2
AN735D31	R42C18000-215		2
AN735D32	R42C18000-220	35 - 8	6
AN735D44	R42C18000-245		2
AN735D48	R42C18000-250		3
AN735D8	R42C18000-130		11
AN737-107	R42C18631-280	125 - 40	2
AN737-22	R42C18631-10		9
AN737-26	R42C18631-210	96 - 2	2
AN737-30	R42C18631-215		2
AN737-34	R42C18631-220	171 - 3	8
AN737-38	R42C18631-225		2
AN737-58	*R42C18631-250	147 - 6	2
AN737-74	R42C18631-260	65 - 2	6
AN737-82	R42C18631-265	55 - 27	2
AN737-91	R42C18631-270	65 - 9	6
AN737-98	R42C18631-275	56 - 25	2
AN74A4	R43B48604	135 -	4
AN74A6	R43B48612	192 -	4
AN742-10	R42C18300-140		1
AN742-11	R42C18300-145		2
AN742-12	R42C18300-150		23
AN742-12C	R42C18200-540		4
AN742-28C	R42C18200-620	122 - 14	4
AN742-30C	R42C18200-630	122 - 18	4
AN742-32	R42C18300-250	35 - 4	2
AN742-35	R42C18300-265		1
AN742-38C	R42C18200-660	122 - 50	6
AN742-4	R42C18300-110		248
AN742-4D			2
AN742-40	R42C18300-290		3
AN742-48	R42C18300-330		2
AN742-5	R42C18300-115		1
AN742-6C	R42C18200-510		3
AN742-7C	R42C18200-515		3
AN742-9	R42C18300-135		3
AN742C42		125 - 1	1
AN742D10	R42C18205-140		2
AN742D10C	R42C18200-130		330
AN742D10CB	R42C18050-130		115
AN742D10L			2
AN742D11C	R42C18200-135		270
AN742D11CB	R42C18050-135		4
AN742D12C	R42C18200-140		120
AN742D12CB	R42C18050-140		2
AN742D13C	R42C18200-145		69
AN742D13CB	R42C18050-145		6
AN742D14	R42C18205-160		7
AN742D14C	R42C18200-150		107

* INDICATES MAKE FROM

PART NUMBER	STOCK NUMBER	FIGURE & INDEX NO.	QTY. PER A/C
AN742D14CB	R42C18050-150	28 -	39
AN742D15C	R42C18200-155		10
AN742D15CB	R42C18050-155		10
AN742D16	R42C18205-170	51 - 26	7
AN742D16C	R42C18200-160		23
AN742D17C	R42C18200-165		7
AN742D18C	R42C18200-170	171 - 6	16
AN742D18CB	R42C18050-170		48
AN742D19C	R42C18200-175		8
AN742D19CB	R42C18050-175		1
AN742D20	R42C18205-185		7
AN742D20C	R42C18200-180		5
AN742D20CB	R42C18050-180		2
AN742D21C	R42C18200-185		2
AN742D22C	R42C18200-190		22
AN742D22CB	R42C18050-190	28 -	12
AN742D22L			4
AN742D23C	R42C18200-195		12
AN742D24	R42C18205-205	90 - 24	4
AN742D24C	R42C18200-200		54
AN742D24CB	R42C18050-200		2
AN742D26C	R42C18200-210		6
AN742D26CB	R42C18050-210	35 - 9	10
AN742D27C	R42C18200-215	35 - 19	4
AN742D28C	R42C18200-220		2
AN742D30C	R42C18200-230		12
AN742D30CB	R42C18050-230		32
AN742D32	R42C18205-245	94 - 7	3
AN742D34C	R42C18200-240		1
AN742D38CB	R42C18050-270		4
AN742D4	R42C18205-110		2
AN742D4C	R42C18200-100		115
AN742D40	R42C18205-280		1
AN742D42CB	R42C18050-290	163 - 22	11
AN742D46C	R42C18200-275	94 - 3	2
AN742D5C	R42C18200-105		194
AN742D6C	R42C18200-110		112
AN742D6CB	R42C18050-110		748
AN742D7	R42C18205-125		4
AN742D7C	R42C18200-115		124
AN742D7CB	R42C18050-115		79
AN742D8	R42C18205-130		8
AN742D8C	R42C18200-120		96
AN742D8CB	R42C18050-120		263
AN742D9C	R42C18200-125		139
AN743-12	R42B22470-60	107 - 23	25
AN743-13			2
AN743-7	R42B22470-30		1
AN749-1-5	R17J2110-5		7
AN749-1-7	R17J2110-7		2
AN749-2-4	R17J2113-4		2
AN749-3-10	R17J2116-10		5
AN749-3-3	R17J2116-3		9
AN749-3-4	R17J2116-4		12
AN749-3-5	R17J2116-5		5
AN749-3-6	R17J2116-6		10
AN749-3-7	R17J2116-7		8
AN749-3-8	R17J2116-8		5
AN749-3-9	R17J2116-9		3
AN7510-2	R82P450050		79
AN756D16	R45F1020-10	35 - 28	4
AN756D20	R45F1020-20		1
AN756D24	R45F1020-30	119 - 41	10
AN756D32	R45F1020-40	120 - 87	6
AN756D40	R45F1020-50	120 -105	6
AN76A6	R43B49804	129 - 72	3
AN760D12	R45E234	35 - 16	4
AN762D20	R45F234-30	120 - 77	1
AN762D24	R45E234-50		1
AN763-12	R33G1385-300	35 - 18	4
AN763-16	R33G1385-375	35 - 27	2
AN773-4	R45C5803-20		25
AN775-4	R45B1258	126 - 25	2
AN775-5	R45B1260	181 - 1	2
AN775-8D	R45B1251	191 - 81	3
AN776-4D	R45F290	126 - 25	1
AN778-8D	R45F287-30	191 - 81	2
AN779D4	R45T205	191 - 51	2
AN781-2	R33N74-150		6
AN783D16	R45T209-740	125 - 16	1
AN783D4	R45T209-710	123 - 5	4
AN784-4D			11
AN784D16	R45T204-40	65 - 76	2
AN784D4	R45T204-10	68 - 23	1
AN795-3	R45T2757-10	67 - 5	3
AN8-12A	R43B80532	3 -	40
AN8-13A	R43B80538		10
AN8-14A	R43B80544		16
AN8-16	R43B80554	124 - 12	1
AN8-16A	R43B80556		12
AN8-21A	R43B80574		6
AN8-22A	R43B80580		6
AN8-25A	R43B80598		4
AN8-27A	R43B80610		2
AN8H10A	R43B85200-20	194 - 36	16
AN800-3	R45C2391		37

PART NUMBER	STOCK NUMBER	FIGURE & INDEX NO.	QTY. PER A/C
AN8008D1	R42I411-745	131 -	16
AN8013D1	R43W300120		8
AN804D4	R45T209-10	65 - 55	11
AN805-3	R45N2561-8		37
AN807-16D	R45N130-112	35 - 41	2
AN814-2D	R45P500		1
AN814-2DL	R45P513-301	152 - 18	3
AN814-4	R45P522		2
AN814-4D	R45P502	24 - 8	22
AN814-4DL		151 - 4	6
AN814-6D	R45P504	125 - 7	3
AN814-8D	R45P505	158 -107	4
AN815-10D	R45U77	65 - 65	8
AN815-12D	R45U77-10	35 - 22	7
AN815-16D	R45U77-20	123 - 11	11
AN815-20D	R45U78	36 - 22	4
AN815-4	R45U1420-20	173 - 7	4
AN815-4D	R45U75-20	35 - 38	90
AN815-5D	R45U76	191 - 71	2
AN815-6D	R45U76-10	65 - 16	1
AN815-8D	R45U76-20	123 - 24	13
AN816-10D	R45C2678-45	65 - 37	1
AN816-4D	R45C2678-20	68 - 42	5
AN818-10D	R45N2383	108 -	18
AN818-12D	R45N2383-10	68 - 52	26
AN818-16D	R45N2383-20	171 - 10	32
AN818-2D	R45N2381		6
AN818-20D	R45N2384		8
AN818-4	R45N2832-10		14
AN818-4D	R45N2381-20	35 -	190
AN818-5D	R45N2382		2
AN818-6D	R45N2382-10	65 -	1
AN818-8D	R45N2382-20	107 -	53
AN819-10	R45S513	108 -	5
AN819-10D	R45S491-10		12
AN819-10Z	R45S7600		1
AN819-12D	R45S491-20		16
AN819-12Z	R45S7620	68 - 52	3
AN819-16	R45S513-20		12
AN819-16D	R45S491-30	171 - 10	22
AN819-2Z	R45S7520		4
AN819-20	R45S513-30		4
AN819-20D	R45S491-40		4
AN819-4	R45S512-20	108 -	53
AN819-4D	R45S490-20	141 -	1
AN819-4Z	R45S7540		132
AN819-5Z	R45S7550		2
AN819-8	R45S512-50	107 -	44
AN819-8D	R45S491		3
AN819-8Z	R45S7580		4
AN821-10D	R45F242-35	191 - 68	2
AN821-8D	R45F242-30		3
AN822-4D	R45F239-15	68 - 19	9
AN823-4D	R45F238-10	68 - 20	5
AN824-4D	R45T283-20	35 - 57	6
AN824-8D	R45T284		1
AN826-4D	R45T318-20	81 - 15	4
AN832-4D	R45U90-10	65 - 4	18
AN832-8D	R45U90-25	123 - 27	5
AN833-10D	R45F232-78	191 - 69	2
AN833-12D	R45F232-80	35 - 14	3
AN833-16D	R45F232-82	35 - 49	6
AN833-4	R45F9536-134		1
AN833-4D	R45F232-70	35 - 55	46
AN833-6D	R45F232-74	191 - 3	4
AN833-8D	R45F232-76	161 - 8	6
AN834-16D	R45T290-40	65 - 73	1
AN834-4D	R45T290-10	35 - 51	5
AN837-10D	R45F232-65-14	119 - 30	1
AN837-12D	R45F232-65-16	35 - 11	2
AN837-16D	R45F232-65-18	125 - 19	1
AN837-4D	R45F232-65-6	35 - 61	17
AN837-8D	R45F232-65-12	123 - 29	1
AN838-4D	R45F261-700	65 - 52	1
AN867-1	R45F895	134 - 31	4
AN871-16D	R45F918		4
AN893-13D	R45B1808		2
AN893-16D	R45B1817	130 - 87	5
AN893-2D	R45B1775	64 - 17	13
AN893-20D	R45B1829	131 -154	2
AN893-3D	R45B1778	28 -	39
AN893-5D	R45B1784	130 - 86	1
AN893-8D	R45B1793	128 - 24	2
AN894D10-5		128 - 8	1
AN9-10A			2
AN9-11	R43B81218	194 - 11	4
AN9-15A			8
AN9-17A		195 - 36	12
AN9-21A	R43B81268	195 - 35	2
AN900-6	R33G545-15	94 - 1	1
AN901-10A	R33G200-60	65 - 67	1
AN901-16A	R33G200-80	125 - 14	4
AN901-4A	R33G200-20	42 - 7	18
AN901-5A	R33G200-30	181 - 2	4
AN901-6A	R33G200-40	125 - 7	1

PART NUMBER	STOCK NUMBER	FIGURE & INDEX NO.	QTY. PER A/C
AN901-8A	R33G200-50	65 - 34	9
AN919-1D	R45R1880	191 - 39	2
AN919-10D	R45R1883	65 - 33	4
AN919-11D	R45R1883-10	191 -	2
AN919-12D	R45R1883-20	129 - 5	1
AN919-2D	R45R1880-10	126 - 22	1
AN919-26D	R45R1888-10	36 -	4
AN924-10D	R45N2415	119 - 30	5
AN924-12D	R45N2415-10	35 - 12	9
AN924-16D	R45N2415-20	35 - 42	14
AN924-3	R45N2828-5	67 - 15	2
AN924-4	R45N2828-10		1
AN924-4D	R45N2413-20	27 - 54	378
AN924-5D	R45N2414	28 - 10	51
AN924-6D	R45N2414-10	11 - 20	135
AN924-8	R45N2828-25	11 - 32	2
AN924-8D	R45N2414-20	11 - 30	52
AN927-4D	R45F269	191 - 66	2
AN929-4	R45C47	95 - 17	4
AN931-10-14	R33G1716		18
AN931-10S14	SPLIT R33G1716		1
AN931-11-16	R33G1718		7
AN931-12-17	R33G1720	42 - 8	1
AN931-12-23	R33G1721-10		5
AN931-12-26	R33G1721-20	137 -107	6
AN931-12S23			12
AN931-14-20	R33G1722		3
AN931-16-22	R33G1724		6
AN931-24-28	R33G1736		2
AN931-3-5	R33G1702		22
AN931-3-9	R33G1703	102 - 49	1
AN931-3S10	SPLIT R33G1703-20		1
AN931-4-12	R33G1704-20		7
AN931-4-16	R33G1705		3
AN931-4-7	R33G1704		17
AN931-5-12	R33G1707		2
AN931-5-13	R33G1707-20		3
AN931-5-7			1
AN931-5-9	R33G1706		5
AN931-6-10	R33G1708		24
AN931-6-16	R33G1709		7
AN931-7-11	R33G1710		4
AN931-7S11	SPLIT R33G1710		7
AN931-8-13	R33G1712	11 - 6	28
AN931-8-20	R33G1713		3
AN931-9-13	R33G1714		2
AN931-9S13	SPLIT R33G1714		2
AN931A10-14	R33G1716-5		9
AN931A12S23			16
AN931A16-22	R33G1724-2		7
AN931A16S30		36 -	2
AN931A24-28	R33G1736-2	137 -108	9
AN931A3S5			6
AN931A4-7	R33G1704-2		2
AN931A5S13			2
AN931A6S10			2
AN931A7-11	R33G1710-2		1
AN931A7S11	SPLIT R33G1710-2		3
AN931A8-13	R33G1712-2		3
AN931A9-13	R33G1714-2		4
AN931A9S13			1
AN931B11-16	R33G1718-4		1
AN931B14-20	R33G1722-4		1
AN931B6-10	R33G1708-4		3
AN931B6-16	R33G1709-10		2
AN931B7-11	R33G1710-4		1
AN931B7S11	R33G1710-4		1
AN931B8-13	R33G1712-5		1
AN931C12-17	R33G1720-6		4
AN931C6-10	R33G1708-6		2
AN931C8-13	R33G1712-10	56 -	1
AN932D2	R45P710	68 - 43	2
AN932U1		186 -	1
AN935-10	R43W90326	81 -	1
AN935-3	R43W90312	83 -	16
AN935-4	R43W90314		6
AN935-6	R43W90318	68 - 3	8
AN935-616	R43W90342		2
AN935-8	R43W90322	42 -	18
AN936A10	R43W96670	13 - 16	41
AN936A10B	R43W75462		24
AN936A6	R43W96662	47 -	4
AN936B8	R43W96358	74 -	1
AN937-12			1
AN937D12	R45C5986-25	131 -138	1
AN937D4	R45C5986	191 - 92	2
AN937D8	R45C5986-15	123 - 25	2
AN938-12	R45T9805-25	131 -114	6
AN938D12		130 - 85	3
AN938D16	R45T253-30	132 -116	1
AN938D4	R45T253	28 -148	27
AN938D5		128 - 22	2
AN938D6	R45T253-10	27 - 47	25
AN938D8	R45T253-15	71 - 9	24
AN939-12		131 - 96	4
AN939D16	R45F270-30	131 - 95	2

PART NUMBER	STOCK NUMBER	FIGURE & INDEX NO.	QTY. PER A/C
AN939D4	R45E270	28 - 13	73
AN939D5	R45F270-5	70 - 25	7
AN939D6	R45F270-10	28 - 14	7
AN939D8	R45F270-15	11 - 41	15
AN941D16	R45F268-530	131 -148	2
AN941D4	R45E268-500	28 -140	2
AN941D6	R45F268-510	27 - 31	8
AN941D8	R45AN-941-8D	191 -	3
AN944-101	R45F457	18 -	68
AN944-103	R45F457-50	185 - 46	2
AN944-201	R45F461	16 - 10	10
AN944-301	R45F464-150	22 - 17	16
AN960-10	R43W225436	9 - 16	673
AN960-10L	R43W225020	9 - 16	197
AN960-1016	R43W225464	11 - 5	114
AN960-1016L	R43W225050	11 - 10	192
AN960-1216	R43W225468	28 - 43	53
AN960-1216L	R43W225055	16 - 9	57
AN960-'416	R43W225472	39 - 2	44
AN960-1416L	R43W225060	179 - 13	7
AN960-1616	R43W225476	178 - 56	4
AN960-1616L	R43W225065	179 - 12	4
AN960-1716L	R43W225070		6
AN960-2116	R43W225484	185 - 2	1
AN960-2116L	R43W225075	184 - 48	1
AN960-2616L	R43W225080	185 - 4	1
AN960-3	R43W225420		1
AN960-4	R43W225424	119 - 5	148
AN960-416	R43W225440	6 - 10	262
AN960-416C			8
AN960-416L	R43W225024	16 - 18	144
AN960-516	R43W225444	53 - 62	123
AN960-516C			1
AN960-516L	R43W225028	53 - 62	12
AN960-516R23			2
AN960-516R24			2
AN960-6	R43W225428	49 - 2	247
AN960-6L	R43W225005	105 - 70	28
AN960-616	R43W225448	18 - 79	197
AN960-616L	R43W225030	18 - 80	106
AN960-716	R43W225452	129 - 33	72
AN960-716L	R43W225035	110 - 21	28
AN960-8	R43W225432		1262
AN960-8L	R43W225010		9
AN960-816	R43W225456	11 - 2	93
AN960-816L	R43W225040	11 - 2	51
AN960-916	R43W225460	194 - 11	49
AN960-916L	R43W225045	92 - 8	53
AN960A416L	R43W14040	172 - 2	2
AN960A8	R43W14232	39 -	5
AN960A8L	R43W14032	160 -	2
AN960C10L	R43W280020		12
AN960C6	R43W280428		44
AN960D10	R43W20536	4 -	13960
AN960D10L	R43W21002	3 - 5	6139
AN960D1016	R43W20564	14 - 6	298
AN960D1016L	R43W21060	37 - 8	60
AN960D1216	R43W20568	11 - 30	60
AN960D1216L	R43W21070		2
AN960D1416	R43W20572	107 - 27	16
AN960D1416L	R43W21075	39 - 2	2
AN960D1616	R43W20576	10 - 2	14
AN960D1616L	R43W21080	10 - 2	2
AN960D1716	R43W20580	68 - 45	8
AN960D1716L	R43W21085	35 - 11	16
AN960D2116	R43W20584	65 - 71	4
AN960D2116L	R43W21090	129 - 29	1
AN960D3	R43W20520	46 -	157
AN960D3L	R43W20994		147
AN960D4	R43W20524	46 -	387
AN960D4L	R43W20996	19 - 17	545
AN960D416	R43W20540	2 - 5	7965
AN960D416L	R43W21030	2 - 5	4953
AN960D516	R43W20544	18 - 34	2101
AN960D516L	R43W21040	18 - 75	639
AN960D6	R43W20528	46 -	222
AN960D6L	R43W20998	33 - 13	463
AN960D616	R43W20548	8 - 2	643
AN960D616L	R43W21020	8 - 2	381
AN960D716	R43W20552	18 -108	410
AN960D716L	R43W21045	23 - 31	146
AN960D8	R43W20532	62 - 27	163
AN960D8L	R43W21000	42 -	153
AN960D816	R43W20556	3 - 17	599
AN960D816L	R43W21050	3 -	341
AN960D916	R43W20560	11 - 20	425
AN960D916L	R43W21055	14 - 47	66
AN960PD10	R43W10325-20		2
AN960PD10L	R43W10340		1
AN960PD4	R43W10325-5	65 -	2
AN960PD416	R43W20430	40 - 2	39
AN960PD416L	R43W10344	40 - 2	10
AN960PD516	R43W10325-30	43 - 3	16
AN960PD516L	R43W10348	43 - 3	8
AN960PD6	R43W10325-10		2
AN960PD616	R43W10325-35	182 - 32	32

PART NUMBER	STOCK NUMBER	FIGURE & INDEX NO.	QTY. PER A/C
AN961-10	R43W42175-20	13 - 13	315
AN961-4	R43W42175-5	39 -	4
AN961-416	R43W42175-25		1
AN961-516	R43W42175-30	128 - 36	4
AN961-616	R43W42175-35	15 - 12	17
AN970-3	R43W210020	46 -144	29
AN970-4	R43W210024	59 - 16	7
AN970-5	R43W210028	167 - 48	2
AN970-6	R43W210032		32
AN970D7		69 - 14	2
AN975-3	R43W2B0750		8
AN995F32	R22W2008		2
AN995NC32	R22W1423-5		24
AN995NC40	R22W1423-10		23
AN995NC51	R22W1424-12		23
AS-313/ARN-6	R16L5426	98 - 1	1
AS-578/ARA-25	R16AN-AS578/ARA25	136 - 68	1
AS12450	R17TOM-AS12450	137 -	4
AT-234/APX		42 - 5	2
		95 - 93	
AT-245/APG-30		42 - 39	1
ATS40-1		190 - 14	1
AT5	R77B368-00505-2944	32 - 49	2
AT6SDA		168 - 32	2
AV14A1111A107		158 - 68	3
		158 - 71	
		158 - 72	
AV14B1124	R83GC0-AV14B1124	132 - 4	1
AV14B1124A107		158 - 70	3
AV14C1138	R83GC0-AV14C1138	28 -113	2
		71 - 45	
		132 - 48	
AV14C1150	R83GC0-AV14C1150	28 -108	4
AV14F1105	R83GC0-AV14F1105	132 - 23	3
AV16B1139B		122 - 69	2
AV16B1160A	R83GC0-AV16B1160A	36 - 3	5
AV16B1160B		36 - 3	5
		122 - 27	
A100-455	R16DAGE-A100-455	101 - 3	2
A100-456	R16DAGE-A100-456	101 - 4	2
		103 - 26	
A1001	R42E4010	85 - 40	2
A1663-012-3		141 -	2
A1663-022-1	R43N99010-110	47 -	1
A1663-032-3		41 -	2
A1663-032-3G		143 - 13	3
A3122-14-3		89 - 18	1
A3122-18-59	R42C18989	55 -146	3
		61 - 12	
A3122-20-59		56 - 26	5
		116 - 11	
A3122-22-59		55 -114	1
A3122-24-59		55 - 28	1
A409	R42H1650-409	81 - 1	1
A411		50 - 15	3
A413	R42H1650-413	43 - 37	2
A4487	R17GMC-A4487	79 - 53	2
A4581	R17S25132-8	79 - 54	2
A4950A24		101 - 23	2
A500A10-5			2
A5374-327	R17GMC-A5374	74 - 17	82
		74 - 39	
		74 - 58	
		77 - 5	
		78 - 9	
		78 - 10	
		79 - 17	
		79 - 29	
		79 - 41	
		79 - 57	
		79 - 63	
		80 - 14	
		81 - 66	
		82 - 33	
A5395	R17GMC-A5395	81 - 5	11
		102 - 10	
		103 - 5	
		103 - 14	
A5495X		98 - 27	1
A621		194 - 1	4
A6939-632-24A		81 -	36
A708	R42H1650-708	194 - 31	3
A8580-4Z3	R43N98980-48		4
A8940-632-24A		81 -	4
		82 - 10	
A8941-632-24A		81 -	6
		82 - 7	
A8943-632-24A		81 -	10
		82 -	
BG616-201		42 - 34	3
BJ055B		42 - 14	1
BLN10003G-C	R77B600598-25	140 - 13	4
		140 - 15	
		151 -	
		186 - 7	
BLN120003G-C		108 -	2

PART NUMBER	STOCK NUMBER	FIGURE & INDEX NO.	QTY. PER A/C
BLN120003G-C		109 -	
BLN12003G-C		186 - 2	1
BLN16003G-C		10 -	2
BLN4003G-C		172 - 6	4
BLN7003G-C		152 -	1
BLN8003G-C	R77B600598-12	184 -	2
BLR12000G		144 -	1
BLR4000C	R77B600412-4	178 -	2
BLR4000G-C		172 - 12	4
BLR5000	R77B600412-5	53 - 65	1
BLR5000G-C	R77B600412-10	154 - 9	5
		154 - 13	
		183 - 8	
		185 - 42	
BLR6000A-G-C	R77B600412-15	185 - 48	1
BLR8000C-G		180 - 42	4
BL8-2			4
BL8-3			10
BNL064			982
BNL1L524		8 -	16
		25 -	
BNS1L1032			8
BN216-3600		42 - 33	1
BRE4095		178 -	2
BRE4095L		129 - 52	1
BRE6070L	R77B600511-45	183 - 4	2
BSN10003G-C		150 - 9	2
BSN8003G-C		157 - 16	2
BSR12000G-C		29 - 24	8
		140 - 56	
BSR20004G-C	R77B600599-10	4 -	8
BSR4000G-C		129 -	1
BSR5000C		145 - 31	4
		145 - 32	
BSR5000G-C	R77B600599-2	24 -	9
		30 - 2	
BSR8000G-C		12 -	12
		145 - 5	
		145 - 20	
BSSN4003		32 - 47	4
BSSN5003G	R77B600632-5	110 - 29	4
BSSN6003G		29 - 41	2
BSSR12000		138 -	1
BSSR12000G		108 - 68	2
		109 - 61	
BSSR4000G		18 -	19
		31 - 2	
		31 - 17	
		110 - 34	
BUO-736998		173 - 9	4
		173 - 16	
		173 - 24	
		173 - 31	
BUO-814281		74 - 53	1
BUO-875334		83 - 19	1
BUO-875337		83 - 10	1
BUO-875416		95 - 19	
BUO-875604		95 - 1	1
BUO-875696		95 - 26	
B1212	R77B354-01203-0004	57 -	4
B4	R77B521-00401-8001	147 -	2
B506		125 - 2	2
		191 - 29	
B88	R77B354-00802-0004	168 - 19	1
	R77B354-00802-4304		
B92-1650-02		53 - 11	31
		53 - 11	
		79 - 46	1
C-1015/ARC-27A	R16C34555-525	79 - 47	1
C-629/APX-6		79 - 60	1
C-758A/ARN-6		74 - 32	1
C-775/APG30		161 - 4	1
CCA4300		170 -	4
CF1001E0312	R16C3737-169	98 - 39	1
CG-131/ARN-6	R16C3733-275	98 - 13	1
CG-405/ARN-6		42 - 30	1
CN-112/APG-30			4
CN364-1032	R16C11382-618-50	104 - 65	1
CP53B1EF105K	R16C11712-251	104 - 66	1
CP53B1EF205K	R16C11354-25-490	104 - 66	1
CP53B4EF504K		103 - 9	1
CP63B1DG103V	R43R43293-10		10
CR116-4-10	R43R43293-4		14
CR116-4-4	R43R43293-8		20
CR116-4-8			2
CR116-5-6			16
CR116-6-12			4
CR116-6-24			62
CR117-4-6			16
CR119-5-8			44
CR148-4-4			80
CR148-4-10	R43R41000-20		344
CR148-4-14			219
CR148-4-4	R43R41000-5		2
CR148-4-5			53
CR148-4-6	R43R41000-10		2
CR148-4-8			

PART NUMBER	STOCK NUMBER	FIGURE & INDEX NO.	QTY. PER A/C
CR148-5-2			4
CR148-5-4			216
CR148-6-4	R43R41001-5		94
CR148C4-6			14
CR162-4-10			23
CR162-4-2	R43R43300		2
CR162-4-4	R43R43304		17
CR162-4-6	R43R43308		45
CR162-4-8	R43R43312		15
CR162-5-4	R43R43344		190
CR162-5-6	R43R43348		68
CR162-5-8	R43R43352		76
CR162-6-16			2
CR162-6-20	R43R43402		4
CR162-6-22			6
CR162C4-10			22
CR162C4-2	R43R43425-5		967
CR162C4-4	R43R43425-10		5022
CR162C4-6	R43R43425-15		1280
CR162C4-7			120
CR162C4-8	R43R43425-20		28
CR162C48			12
CR162C5-10	R43R43427-20		10
CR162C5-4	R43R43427-5		991
CR162C5-6	R43R43427-10		1043
CR162C5-8	R43R43427-15		196
CR162C6-10			46
CR162C6-12			6
CR162C6-14			8
CR162C6-16	R43R43429-30		2
CR162C6-4	R43R43429-5		32
CR162C6-6	R43R43429-10		135
CR162C6-8	R43R43429-15		68
CR162C8-12			4
CR162G4-6			61
CR162G4-8			16
CR163-4-10	R43R43066		6
CR163-4-4	R43R43054		28
CR163-5-12			52
CR163-5-14	R43R44150-65		28
CR163-5-4			22
CR163-6-16			20
CR163-6-18			32
CR163-6-20			100
CR163-8-6	R43R44150-180		2158
CR163-8-8	R43R44150-185		848
CR163C4-2	R43R43170		180
CR163C4-4	R43R43170-10		1218
CR163C5-2			28
CR163C5-4	R43R43172-10		303
CR163C5-6			223
CR163C5-8			8
CR163C6-4			200
CR163C6-6			274
CR163C6-8			26
CR198-4-6			50
CR198-4-8			4
CR2781F103A1A	R86GE-CR2781F103A1A	100 - 35	1
CR2781M171A1A		100 - 36	1
CR362C5-4			8
CR363-5-6			3
CR363-6-8			1
CR363C5-4			8
CR562-4-4	R43R298010-8		24
CR562-5-4			12
CR562-6-10	R43R298030-20		8
CR562-6-6	R43R298030-12		28
CR562C5-6			24
CR562C5-8	R43R299020-16		7
CR562G4-4			2
CR563-4-2	R43R296000		56
CR563-4-4	R43R296002		194
CR563-4-6	R43R296004		10
CR563-4-8	R43R296006		12
CR563-5-4			28
CR563-5-6			4
CR563-6-2			38
CR563-6-4			29
CR563-6-6			9
CR563C4-2			18
CR563C4-4			163
CR563C4-6			46
CTA9-1		53 - 89	4
CU217/U		42 - 35	1
CY-1409/APN-22		4 - 55	1
C09A008		35 - 43	6
C09A012	R45FLRE-C090A12	36 - 2	8
		118 - 19	
C09A014	R45FLRE-C090A14	118 - 7	27
C09A016		35 - 5	4
		118 - 37	
C09A020	R45FLRE-C090A020	118 - 32	10
		163 - 23	
C09A300		35 - 43	6
C09A302	R33FLRE-C090A302	36 - 2	8
		118 - 20	

PART NUMBER	STOCK NUMBER	FIGURE & INDEX NO.	QTY. PER A/C
C09A303		118 - 8	27
C09A304	R33FLRE-C09A304	35 - 6	4
		118 - 38	
C09A306	R33FLRE-C09A306	118 - 33	10
		163 - 23	
C1001-0250		170 -	8
C1006		75 - 22	1
C4391-5-2	R17T5865-102	101 - 57	1
C4391-7-15	R17T5865-101	160 - 31	1
DR134A22	R43R54038		2
DR173A26	R43R54076		5
DW4	R77B995-18001-0000	10 -	30
		26 -	
		55 -	
		57 -	
		61 -	
		115 -	
		117 -	
		146 -	
DW5	R77B995-18004-0000	55 -	18
		61 -	
		116 -	
		117 - 19	
		146 -	
		147 - 30	
DW6	R77B995-18003-0000	55 -	9
		61 -	
		116 -	
		146 -	
		147 -	
D100-542	R82DARL-D100-542	89 - 16	1
D101		42 - 10	1
D110		65 - 6	1
D4680-1-24		137 - 10	1
D4680-2-24		137 - 9	1
D6753-1	R17SPT-D6753-1	84 - 13	6
D7235-1-10	R17SPT-D7235-1-10	136 - 16	6
		136 - 17	
D7235-1-80		136 - 25	2
EB048	R43N96150		4
EB064	R43N96160	37 -	3
		38 -	
		189 - 18	
EB070	R43N96165	108 -109	1
		124 - 10	
EB080	R43N96170	9 - 8	30
		37 - 16	
		38 - 16	
		45 - 21	
		124 - 21	
		156 - 19	
		173 - 45	
		173 - 51	
		189 - 19	
EB098	R43N96175	37 - 18	32
		38 - 18	
		124 - 8	
EB108	R43N96180	14 - 6	8
		156 - 2	
EB126	R43N96185		4
EB164	R43N96195	14 - 5	10
		180 - 55	
ER6271-4-9.25		132 -	1
ER6271-6-16.25		135 -	1
ER6271-6-19.50		132 -	1
ER6292-4-10.5		28 -	2
ER6292-4-11		28 -	6
		158 -	
ER6292-4-11.25		129 -	4
		154 -	
ER6292-4-12		135 -	1
ER6292-4-12.25		28 -	3
		158 -	
ER6292-4-13		28 -	4
ER6292-4-13.25		158 -	2
ER6292-4-13.5		69 -	2
ER6292-4-14.25		158 -	2
ER6292-4-14.5		28 -	4
		39 -	
ER6292-4-15		39 -	1
ER6292-4-15.25		28 -	5
		131 -	
ER6292-4-16.50		28 -	5
		158 -	
		159 -	
ER6292-4-17.50		132 -	4
ER6292-4-18		159 -	1
ER6292-4-18.5		39 -	1
ER6292-4-18.75		28 -	
ER6292-4-19.5		28 -	1
ER6292-4-19.75		130 -	2
ER6292-4-20		131 -	2
ER6292-4-22.75		130 -	2
ER6292-4-23		129 -	1
ER6292-4-23.25		132 -	2
ER6292-4-27		130 -	2

PART NUMBER	STOCK NUMBER	FIGURE & INDEX NO.	QTY. PER A/C
ER6292-4-29.5		130 -	2
ER6292-4-35		69 -	1
ER6292-4-8		28 -	2
ER6292-4-9.25		28 -	3
ER6292-5-13.75		69 -	2
ER6292-5-14		181 - 32	2
ER6292-5-14.5		69 -	2
		128 -	
ER6292-5-21.5		181 - 19	2
ER6292-5-25.50		129 -	1
ER6292-6-15.50		27 -	4
ER6292-6-16		27 -	4
ER6292-6-25.50		64 -	1
ER6292-6-26.75		129 -	1
ER6292-6-27.25		64 -	1
ER6292-6-30.75		64 -	2
ER6292-6-35.5		69 -	1
ER816-4D	R45C2678-510	131 -120	10
		135 -115	
ER894D12-12	R45A134-240		1
ER894D16-16		132 -109	4
ER894D4-4		28 - 85	5
		63 - 84	
ER894D6-6		64 - 31	6
		131 -106	
ER894D8-8		132 -110	1
ER929-4		130 - 94	2
		135 -110	
E1002-3-160	R17P5950	102 - 49	1
E1597-1	R86EC1589-1C	100 - 33	1
E1603-1	R86GE2CM73C2	190 - 12	2
E1617-1	R1717427	95 - 27	2
		95 - 32	
E1821-1		190 - 10	1
E1821-2		100 - 31	1
E1859	R17ARBN-E1859	88 -	1
E1967		96 - 7	1
E200M19	R17ARBN-E200M19		1
E2200M1	R17M4026	88 -	1
E2220	R17B36526-27	54 -	1
E3037		95 - 81	1
FCE29801		36 - 64	1
FCE29802		36 - 64	1
FCE29805		36 - 62	1
FCE29806		36 - 62	1
FC70T	R17T4652-80		2
FC71T	R17T4652-60		2
FDT6		146 -104	1
FT3		53 - 79	2
F22229-1	R82ARN-F22229-1	94 - 20	1
F271		137 -	6
F73			2
F73U			1
GB812		32 - 48	4
GC61T	R17T4652-10	136 -	6
GC63T	R17T3630-53		6
GC71T	R17T4652-40	137 -	6
GC72T	R17T4652-30	96 -	2
GC73T	R17T4652-90	137 - 96	15
GC83T	R17T4652-95		1
GC93T	R17T4652-100		2
GRA312-10H32		18 - 24	6
GRA350-8H32	R82NEUS-GRA350-8H32	108 - 60	4
		108 - 71	
		109 - 55	
		119 - 77	
GRA4X6-12H32	R82NEUS-GRA4X6-12H32	119 - 79	4
		120 - 95	
		120 -134	
		121 - 38	
GRA400-12H32		119 - 32	1
GRA6X10-24H32	R82NEUS-GRA6X10-24H32	120 - 99	2
		120 -132	
GRA600-16H32	R82NEUS-GRA600-16H32	120 - 97	1
GRA725-16H32		18 - 27	8
		107 - 29	
		119 - 81	
		121 - 40	
GRC6227-19		152 - 22	4
G3-748		184 - 41	1
G56570		56 - 3	1
G572		128 - 40	4
		128 - 42	
		128 - 47	
G573		128 - 37	5
		128 - 41	
		128 - 43	
		128 - 48	
G573U		128 - 39	1
G673		128 - 45	5
HCM	R17P7198-10	97 - 10	65
		97 - 21	
		97 - 22	
HFL3		54 - 6	3
		54 - 26	
		54 - 68	

PART NUMBER	STOCK NUMBER	FIGURE & INDEX NO.	QTY. PER A/C
HFL4		54 - 37	1
HF3	R773600334	54 - 17	1
HF4	R77B600326	54 - 34	1
HSBG12		108 -	2
		109 -	
HSSB14-1		46 -	3
		47 -	
		146 -	
HSSB18-1		46 -	2
		47 -	
HSSB26-1		22 - 4	4
HSSB30-1		18 -	4
HS10-8-4-5			1
HS15-10	R43C20010		1196
HS15-12	R43C20015		1286
HS15-4	R43HIS-HS15-4		3243
HS15-6	R43C20000		22821
HS15-6-3			15
HS15-8	R43C20005		5064
HS30P6-10			4
HS30P6-12			4
HS30P6-13			4
HS30P6-15			8
HS30P6-17			2
HS30P6-6			4
HS30P6-7			4
HS30P6-9			4
HS32-6			15
HS37P14-16			4
HS37P14-17			4
HS37P14-18			4
HS37P14-20			4
HS37P14-21			4
HS37P14-22			4
HS37P14-23			4
HS37P14-24			4
HS37P14-25			4
HS37P14-26			4
HS37P14-27			4
HS37P14-28			6
HS37P14-29			8
HS37P14-30			4
HS37P14-31			4
HS37P14-32			8
HS37P14-33			8
HS37P14-34			4
HS37P14-35			4
HS37P14-36			8
HS37P14-37			4
HS37P14-38			8
HS37P14-39			4
HS37P14-40			8
HS37P20-16			4
HS37P20-17			4
HS38P14-10			6
HS38P14-11			8
HS38P14-13			4
HS38P14-14			8
HS38P14-18			32
HS38P14-22			8
HS38P14-7			8
HS38P14-8			2
HS38P14-9			22
HS38P16-10			2
HS38P16-14			2
HS38P16-15			4
HS38P16-9			2
HS38P18-14			4
HS38P18-15			4
HS38P18-27			4
HS38P20-12			4
HS38P20-14			4
HS38P20-23			4
HS38P20-28			4
HS47-10-11			12
HS47-10-13			6
HS47-10-14			20
HS47-10-15			12
HS47-10-16			20
HS47-10-17			48
HS47-10-18			32
HS47-10-19			16
HS47-10-20			4
HS47-10-21	R43R335292-42		8
HS47-10-22	R43R335292-44		20
HS47-10-23			8
HS47-10-5			22
HS47-10-6			12
HS47-10-7			57
HS47-10-8			12
HS47-12-10			44
HS47-12-11			26
HS47-12-12			42
HS47-12-13			30
HS47-12-14			18
HS47-12-15			

PART NUMBER	STOCK NUMBER	FIGURE & INDEX NO.	QTY. PER A/C
HS47-12-16			8
HS47-12-17			40
HS47-12-18			4
HS47-12-19			8
HS47-12-5			2
HS47-12-7			280
HS47-12-8			320
HS47-12-9			20
HS47-4-10			54
HS47-4-11			6
HS47-4-17			2
HS47-4-2			695
HS47-4-3			1136
HS47-4-4			308
HS47-4-5			31
HS47-4-6			38
HS47-4-7			18
HS47-6-10			119
HS47-6-11			105
HS47-6-12			95
HS47-6-13			42
HS47-6-14			18
HS47-6-16			10
HS47-6-2			224
HS47-6-27		166 - 22	50
HS47-6-29			4
HS47-6-3			3113
HS47-6-4	R43R335288-8		8240
HS47-6-5	R43R335288-10		2642
HS47-6-6			1151
HS47-6-7	R43R3352880-14		774
HS47-6-8	R43R335288-16		465
HS47-6-9			190
HS47-8-10			24
HS47-8-11	R43R335290-22		31
HS47-8-12			31
HS47-8-13			98
HS47-8-14			10
HS47-8-15			17
HS47-8-16			4
HS47-8-17			5
HS47-8-18			1
HS47-8-23	R43R335290-46		4
HS47-8-27	R43R335290-54		2
HS47-8-3			6
HS47-8-31			4
HS47-8-4			980
HS47-8-5			830
HS47-8-6			358
HS47-8-7	R43HIS-HS47-8-7		193
HS47-8-8	R43HIS-HS47-8-8		83
HS47-8-9	R43R335290-18		20
HS48-10-10			139
HS48-10-11			26
HS48-10-12	R43R335284-24		28
HS48-10-13			89
HS48-10-14			10
HS48-10-15			8
HS48-10-19			10
HS48-10-5			67
HS48-10-6			118
HS48-10-7			112
HS48-10-8			79
HS48-10-9			58
HS48-12-10			12
HS48-12-11			4
HS48-12-14			8
HS48-12-15			16
HS48-12-22			16
HS48-12-26			16
HS48-12-28			14
HS48-12-4			6
HS48-12-41			4
HS48-12-5			16
HS48-12-6			10
HS48-12-7			98
HS48-12-8	R43R335286-16		15
HS48-12-9			39
HS48-14-7			2
HS48-4-10			2
HS48-4-11			4
HS48-4-12			4
HS48-4-15			1
HS48-4-17			2
HS48-4-2			148
HS48-4-3			654
HS48-4-32			4
HS48-4-4			56
HS48-4-5			8
HS48-4-6			76
HS48-4-7			6
HS48-4-8	R43R335279-16		9
HS48-4-9			10
HS48-6-10	R43R335280-20		105
HS48-6-11			59
HS48-6-12			73

PART NUMBER	STOCK NUMBER	FIGURE & INDEX NO.	QTY. PER A/C
HS48-6-13			13
HS48-6-14			11
HS48-6-15			5
HS48-6-16			26
HS48-6-17			7
HS48-6-19			12
HS48-6-2			27
HS48-6-20			8
HS48-6-21			52
HS48-6-23			2
HS48-6-25			48
HS48-6-26			6
HS48-6-3			1814
HS48-6-30			2
HS48-6-4	R43R335280-8		3510
HS48-6-5	R43R335280-10		1953
HS48-6-6	R43R335280-12		1243
HS48-6-7			389
HS48-6-8			168
HS48-6-9	R43R335280-18		176
HS48-8-10			35
HS48-8-11			30
HS48-8-12	R43R335282-24		15
HS48-8-13	R43R335282-26		5
HS48-8-14			4
HS48-8-16			8
HS48-8-17			20
HS48-8-18			5
HS48-8-20			6
HS48-8-24			1
HS48-8-25			4
HS48-8-27			2
HS48-8-28			9
HS48-8-3	R43R335282-6		112
HS48-8-31			4
HS48-8-4			481
HS48-8-5			303
HS48-8-6	R43R335282-12		360
HS48-8-7	R43R335282-14		312
HS48-8-8	R43R335282-16		150
HS48-8-9	R43R335282-18		41
HS5	R17EXS-HS5	34 - 4	183
		34 - 5	
		34 - 8	
		34 - 11	
		34 - 15	
		34 - 24	
		103 - 12	
		160 - 2	
		178 - 9	
		178 - 10	
HS51P8-10			4
HS51P8-11			5
HS51P8-5			8
HS51P8-6			4
HS51P8-7			18
HS51P8-8			10
HS51P8-9			8
HS52P12-29	R43HIS-HS52P12-29		2
HS52P6-13			22
HS52P6-15			34
HS52P6-16			4
HS52P6-18			2
HS52P6-19			10
HS52P6-20			28
HS52P6-21			44
HS52P6-22			4
HS52P6-26			4
HS52P8-18			20
HS58P6-15			16
HS58P6-20			8
HS6-7			2
HS68C4			140
HS68C6			180
HS68R4-3			140
HS68R6-11			165
HS68R6-12			15
HS98477			2
HS98478			2
HS98480		177 - 2	6
H1002		81 -	3
H17835B		42 - 36	1
H203G	R17S25107-180	34 - 2	10
		34 - 16	
		104 - 56	
		160 - 9	
		160 - 12	
H3FN		63 -	4
H5SB14-1		29 - 3	4
H5000-2-051-115		106 - 42	1
H5000-2-064-102	R42L1436-100	108 - 56	2
H5000-2-064-179		141 - 34	6
		141 - 50	
H5000-2-064-312	R42L1436-125-312		1
H5000-2-072-179	R42L1436-135-20	114 - 18	2
H5000-2-072-196		114 - 38	1

PART NUMBER	STOCK NUMBER	FIGURE & INDEX NO.	QTY. PER A/C
H5000-2-091-164		112 - 12	1
H5000-2-102-132		18 - 53	4
H5000-2-115-218			2
H5000-2-125-218	R42L1436-235-218	114 - 9	2
H5100-2-125-330		108 - 16	4
		109 - 79	
H53S1032-10			20IN
H53S1032-16			14IN
H53S1032-8			4IN
H66S1032S			324
ID-250/ARN	R16AN-ID2501ARN	81 - 34	1
ID-257/APN-22	R16AN-ID257/APN22	81 - 28	1
ID-295/APG-30		81 - 78	1
JV20	R17A99-10	85 - 14	10
		85 - 16	
		101 - 46	
JV9005		128 - 62	1
J40WE22		190 - 27	1
J40WE22A		190 - 27	1
KC63T		137 -	2
LC-C10			26
LC-C6	R17T3627-440		72
LC-C8	R43C15025		4
LC-R6			112
LSS10	R77B400305-10	140 - 33	1
LS3	R77B34529	72 - 13	1
MBH2731		105 - 83	2
MC1603	R83MC1603	62 - 14	6
		64 - 13	
		69 - 2	
		135 - 23	
MDH2721		115 - 29	1
MD46-15	R77B600293	50 - 17	1
MF9-3911-30Z	R86VI-MF9-3911-30Z	60 - 27	1
MK1MOD 1		87 - 1	1
MK11MOD 1		83 - 19	1
		83 - 19	
MK12MOD 0		173 - 9	4
		173 - 16	
		173 - 24	
		173 - 31	
MK14MOD 0		95 - 19	1
		95 - 19	
MK2MOD 0		82 - 19	1
MK2MOD 2		82 - 19	1
MK25MOD 0		95 - 20	1
		95 - 20	
MK51MOD 14		174 - 5	2
		174 - 6	
MK7MOD 0		173 - 8	4
		173 -	
		173 - 23	
		173 - 30	
MK75MOD 0		95 - 26	1
		95 - 26	
MK86MOD 0		95 - 1	1
		95 - 1	
MK87MOD 0		42 - 40	1
MS15001-1	R45MS15001-1	180 - 20	13
MS15001-4	R45MS15001-4	4 -	10
MS20001PH4-240		47 -	4
MS20001PH4-250		5 - 5	4
MS20001PH5-1042		182 - 41	10
MS20001PH5-1400		182 - 53	4
MS20001PH6-1400		182 - 46	3
MS20001PH6-1888		18 - 96	4
MS20001PH6-594		7 - 3	4
MS20001PX12-825		114 - 8	1
MS20001PX16-012			2
MS20001PX3-350		105 - 28	2
MS20001PX4-1050		105 - 15	2
MS20001PX4-200		106 - 40	1
MS20001PX5-1050		105 - 78	1
MS20001PX6-2292		50 - 36	1
MS20001PX6-503		7 -	2
MS20001PX6-620		7 - 12	2
MS20001PY12-825	R42H17172-12	114 - 7	1
MS20001PY3-1050		105 - 79	2
MS20001PY3-350		105 - 29	2
MS20001PY4-1050		105 - 16	2
MS20001PY4-200		106 - 39	1
MS20001PY6-1940		183 - 49	2
MS20001PY6-2292		50 - 35	1
MS20001PY6-503		7 - 10	2
MS20001PY6-620		7 -	2
MS20002C5		178 - 6	9
MS20005-51		178 - 6	2
MS21902D10		135 - 99	2
MS21902D12		130 - 75	24
MS21902D16		130 - 82	15
MS21902D4		27 - 52	344
MS21902D5		28 - 4	28
MS21902D6		11 - 39	116
MS21902D8		11 - 27	75
MS21903D16		129 - 29	1
MS21903D4		28 -148	95

PART NUMBER	STOCK NUMBER	FIGURE & INDEX NO.	QTY. PER A/C
MS21903D5	R45MS21903D5	69 - 48	9
MS21903D6		11 - 22	78
MS21903D8		11 - 32	16
MS21904D4		28 -132	21
MS21904D5		129 - 68	3
MS21904D6		129 - 63	5
MS21905D16		131 -129	3
MS21905D4		28 - 69	56
MS21905D5		130 - 70	4
MS21905D6		63 - 21	1
MS21905D8		63 - 15	4
MS21906D4		28 - 90	3
MS21907D10		128 - 13	1
MS21907D12		131 -124	4
MS21907D4		27 - 54	93
MS21907D5	R45MS21907D5	28 -137	13
MS21907D6		11 - 20	25
MS21907D8		11 - 30	22
MS21908D10		131 -155	1
MS21908D12		130 - 92	17
MS21908D16		130 - 89	10
MS21908D4		28 - 38	230
MS21908D5	R45MS21908D5	28 -139	26
MS21908D6		27 - 46	58
MS21908D8		11 - 44	73
MS21909D12		131 -147	4
MS21909D4		28 - 67	28
MS21909D6		131 -131	3
MS21909D8		131 -151	5
MS21910D4	R45T209-810	69 - 4	1
MS21910D6		133 - 13	3
MS21910D8		131 -108	8
MS21911D16		131 -154	1
MS21911D4	R45T204-110	130 - 68	6
MS21912D12		131 - 98	4
MS21912D4		28 -144	16
MS21912D6	R45MS21912D6	63 - 32	12
MS21912D8		130 - 88	6
MS21913D4		63 - 70	1
MS21914-4	R45MS21914-4	71 - 33	6
MS21914-6		64 - 28	2
MS21914D4		135 - 95	1
MS21914D5		130 - 71	2
MS21915D12-8		131 - 97	3
MS21915D16-6		129 - 30	1
MS21915D6-4		63 - 34	9
MS21915D6-5		129 - 6	1
MS21915D8-4		63 - 17	3
MS21915D8-6		11 - 25	7
MS21916D10-4		135 - 67	4
MS21916D12-4		62 - 16	2
MS21916D12-5		131 -121	2
MS21916D12-6		131 -126	5
MS21916D12-8		131 -127	9
MS21916D4-3		128 - 29	5
MS21916D5-4		69 - 66	7
MS21916D6-4		27 - 49	48
MS21916D6-5		135 -124	2
MS21916D8-4	R45MS21916D8-4	28 -112	31
MS21916D8-5	R45MS21916D8-5	128 - 3	7
MS21916D8-6		11 - 35	46
MS21917-4			2
MS21917-6			4
MS21917-8			5
MS21917D10			11
MS21917D12			66
MS21917D16			48
MS21917D4			1203
MS21917D5	R45MS21917D5		161
MS21917D6			615
MS21917D8	R45MS21917D8		296
MS21918-10			11
MS21918-12			66
MS21918-16			48
MS21918-4			1191
MS21918-5	R45MS21918-5		161
MS21918-6			608
MS21918-8	R45MS21918-8		296
MS21919DG10			10
MS21919DG11			7
MS21919DG12			1
MS21919DG13			3
MS21919DG17			1
MS21919DG2			6
MS21919DG3			21
MS21919DG4			13
MS21919DG5			30
MS21919DG6			15
MS21919DG7			12
MS21919DG8			13
MS21919DG9			17
MS21919D617			1
MS21919G4			1
MS21919G8			8
MS21919H3			4
MS25002-6		81 - 45	1

PART NUMBER	STOCK NUMBER	FIGURE & INDEX NO.	QTY. PER A/C
MS25003-10		79 - 16	1
MS25003-5		81 - 50	1
MS25005-10		84 - 28	13
MS25005-15		84 - 16	5
MS25005-20		84 - 35	5
MS25005-25		84 - 36	7
MS25005-5		84 - 14	119
MS25010-3		76 - 13	19
MS28006-1	R8812675-025	81 - 54	1
MS28016B4		132 - 14	2
MS28720-4		159 - 23	1
MS28720-6	R83PUP38426	159 - 13	2
MS28720-8	R83SKP567603	11 - 28	8
MS28740-16		35 - 31	16
MS28740-20		36 -	21
MS28741-10-0160		191 - 70	2
MS28741-10-0270		128 -	1
MS28741-16-0120		191 - 21	2
MS28741-16-0194		191 - 65	2
MS28741-16-0262		131 -	1
MS28741-4-0050		191 - 50	1
MS28741-4-0134		122 - 74	1
MS28741-4-0160		191 - 77	1
MS28741-4-0170		191 - 56	2
MS28741-4-0175		191 - 93	2
MS28741-4-0180		191 - 88	2
MS28741-4-0200		173 - 19	1
MS28741-4-0202		191 - 95	2
MS28741-4-0220		36 - 44	3
MS28741-4-0230		123 - 7	3
MS28741-4-0240		191 - 28	4
MS28741-4-0280		123 - 3	1
MS28741-4-0300		121 - 11	2
MS28741-4-0310		173 - 3	1
MS28741-4-0320		173 - 4	1
MS28741-4-0324		173 - 12	2
MS28741-4-0350		36 - 45	2
MS28741-4-0352		191 - 9	2
MS28741-4-0356		191 - 48	2
MS28741-4-0360		191 - 40	4
MS28741-4-0440		123 - 2	1
MS28741-4-0484		191 - 43	2
MS28741-4-0520		119 - 25	2
MS28741-4-0730		120 - 10	4
MS28741-4-0900		191 - 75	2
MS28741-5-1060		191 - 74	2
MS28741-6-0256		191 - 59	4
MS28741-6-0380		191 - 7	2
MS28741-8-0126		191 - 85	2
MS28741-8-0210		36 - 14	1
MS28741-8-0300		36 - 14	1
MS28741-8-0350		120 - 21	1
MS28782-19		151 - 11	2
MS28782-32		151 - 16	2
MS28782-39		151 - 30	1
MS28782-42		151 - 32	1
MS28783-9		151 - 13	3
MS29512-12		35 - 23	2
MS29512-16		35 - 34	4
MS29512-4		35 - 39	103
MS29512-5		161 - 12	3
MS29512-8		161 - 9	8
MS29513-12	R33MS29513-12	34 - 6	50
MS29513-132	R33MS29513-132	103 - 22	6
MS29513-14	R33MS29513-14	34 - 3	78
MS29513-16	R33MS29513-16	98 - 37	28
MS29513-18	R33MS29513-18	102 - 6	17
MS29513-20	R33MS29513-20	34 - 19	28
MS29513-22	R33MS29513-22	34 - 13	28
MS29513-24	R33MS29513-24	102 - 2	13
MS29513-28	R33MS29513-28	42 - 20	42
MS29513-332	R33MS29513-332	120 - 42	3
	R33P492-2570-80		
MS29513-346	R3MS29513-346	163 - 18	1
	R33P492-2695		
MS29513-427	R33MS29513-427	36 - 56	4
MT-1042/ARA-25	R16AN-MT1042/ARA25	95 - 72	1
MT-1043/ARA-J5	R16AN-MT1043/ARA25	100 - 16	1
MT-274/ARN-6	R16M4992-500	98 - 50	
MT-362/APX-6		99 -	4
MT-707/APG-30		42 - 38	1
MT-708/APG-30		42 - 31	1
MT-739/U		42 - 42	1
MT-803/APN-22		95 - 86	1
MT-822/ARC-27		100 - 20	1
MT648		94 - 16	4
M12-917		166 - 31	1
M12-918		166 - 18	1
M12-919		166 - 32	1
M12-920		166 - 19	1
NAF1024-2	R17L11341	103 - 13	1
NAF1025-2	R82C76000	119 -	2
NAF1025-7	R82F290630		2
NAF1077-13	R17R2806	79 - 25	2
NAF1088-1A			8FT
NAF1088-1A3	*R42C16500	194 - 32	

* INDICATES MAKE FROM

PART NUMBER	STOCK NUMBER	FIGURE & INDEX NO.	QTY. PER A/C
NAF1088-1A4	*R42C16500	39 -	
NAF1088-1A5	*R42C16500	39 -	
NAF1088-1A6	*R42C16500	126 - 4	
NAF1088-1A7	*R42C16500		
NAF1088-2C			2FT
NAF1088-2C6	*R42C16750	119 -	
		121 -	
NAF1195-4AC10	R43R85008		36
NAF1195-4AC12	R43R85012		322
NAF1195-4AC14	R43R85016		16
NAF1195-4AC20	R43R85028		30
NAF1195-4AC6	R43R85000		104
NAF1195-4A10	R43R54026		50
NAF1195-4A4	R43R54020		6
NAF1195-4A6	R43R54022		4
NAF1195-4A8	R43R54024		1
NAF1195-4BC12	R43R43304		1457
NAF1195-4BC18	R43R43308		344
NAF1195-4BC25	R43R43312		55
NAF1195-4BC6	R43R43300		2530
NAF1195-4B12	R43R43054		326
NAF1195-4B18	R43R43058		176
NAF1195-4B25	R43R43062		54
NAF1195-4B6	R43R43050		5025
NAF1195-5AC10	R43R85044		1
NAF1195-5AC12	R43R85048		18
NAF1195-5AC14	R43R85052		18
NAF1195-5AC16	R43R85056		5
NAF1195-5AC18	R43R85060		38
NAF1195-5AC20	R43R85064		2
NAF1195-5A10	R43R54052		44
NAF1195-5A12	R43R54054		16
NAF1195-5A14	R43R54056		2
NAF1195-5A16	R43R54058		4
NAF1195-5A18	R43R54062		6
NAF1195-5A20	R43R54066		4
NAF1195-5A22	R43R54070		5
NAF1195-5BC12	R43R43344		2894
NAF1195-5BC18	R43R43348		1038
NAF1195-5BC25	R43R43352		80
NAF1195-5BC31	R43R43356		2
NAF1195-5B12	R43R43094		2500
NAF1195-5B18	R43R43098		468
NAF1195-5B25	R43R43102		328
NAF1195-5B31	R43R43106		200
NAF1195-5B6	R43R43090		350
NAF1195-6AC18	R43R85106		8
NAF1195-6A10			8
NAF1195-6A12	R43R54084		4
NAF1195-6A20	R43R54094		3
NAF1195-6A22	R43R54096		2
NAF1195-6BC12	R43R43380		498
NAF1195-6BC18	R43R43384		487
NAF1195-6BC25	R43R43388		310
NAF1195-6BC31	R43R43392		18
NAF1195-6BC38	R43R43396		3
NAF1195-6BC44	R43R43398		10
NAF1195-6B12	R43R43130		698
NAF1195-6B18	R43R43134		2670
NAF1195-6B25	R43R43138		550
NAF1195-6B31	R43R43142		88
NAF1195-6B38	R43R43160		18
NAF1195-6B6	R43R43126		20
NAF1201-8	R37B2783-25	88 - 4	1
NAF1225-450	R17V788-200	80 - 3	1
NAF1241-2	R88I1651-30	82 - 6	1
NAF1259-1L	R37B2974	88 - 2	1
NAF1259-1R	R37B2974	88 - 3	1
NAF1268-1	R88T1950-050	39 - 3	1
NAF1330-1	R17NAF1330-1	136 - 50	1
NAF1332-5		192 - 10	14
NAF1336-1		192 - 11	4
NAF1338-1			11
NAF312508-3	R82NAF312508-3	87 - 3	
NAF312508-6		87 - 7	
NAF312508-9		87 -	
NAF312513-1		87 - 6	
NAF602200-1	R82C35200	87 - 2	1
NAF603714		156 - 5	1
NAS121B125	R42K4880	79 - 39	1
NAS143-10	R43W220325		12
NAS143-10C	R43W176190	14 - 6	30
NAS143-12	R43W220330		2
NAS143-12C	R43W176200		4
NAS143-14C	R43W176205	39 - 2	6
NAS143-16	R43W220332	14 - 5	40
NAS143-16C	R43W176210	2 - 8	14
NAS143-4	R43W220300		12
NAS143-4C	R43W176160	17 - 6	45
NAS143-5	R43W220305		6
NAS143-5C	R43W176165	32 - 4	24
NAS143-6	R43W220310	37 -	7
NAS143-6C	R43W176170	28 - 88	16
NAS143-7	R43W220315	18 - 74	28
NAS143-7C	R43W176175	18 - 74	23
NAS143-8	R43W220318	45 - 22	3

* INDICATES MAKE FROM

PART NUMBER	STOCK NUMBER	FIGURE & INDEX NO.	QTY. PER A/C
NAS143-8C	R43W176180	37 - 15	21
NAS143-9	R43W220322	124 - 7	10
NAS143-9C	R43W176185	14 - 63	56
NAS144-14	R43B88553-50		4
NAS144-15		17 - 5	12
NAS144-16	R43B88553-60	17 - 6	18
NAS144-19	R43B88553-64	28 - 87	8
NAS144-20	R43B88553-66		8
NAS144-21	R43B88553-65		4
NAS144-23	R43B88553-80		10
NAS144-27		164 - 7	2
NAS144-31			2
NAS144-33			6
NAS144DH11			8
NAS144DH13		157 - 1	8
NAS145-17			4
NAS145-20	R43B88554-55	41 - 3	2
NAS145-21	R43B88554-60	164 - 1	2
NAS145-22			2
NAS145-26	R43B88554-85	108 -	18
NAS145-28	R43B88554-95	164 - 7	2
NAS145-32			10
NAS145-33	R43B88554-120	32 - 44	2
NAS145-36			2
NAS145-37	R43B88554-140	174 - 3	2
NAS145-39			2
NAS145-42			2
NAS145-61			2
NAS145DH59		32 - 4	4
NAS146-19		177 - 44	4
NAS146-23		7 - 38	14
NAS146-27	R43B88555-40	37 -	6
NAS146-28			2
NAS146-30	R43B88555-46		2
NAS146-42	R43B88560		1
NAS146-63		114 - 24	3
NAS146-74	R43B88560-60	189 - 18	1
NAS146A42	R43B88512-155	194 - 6	2
NAS146DH56	R43B88134-54	28 - 88	4
NAS147-22	R43B88666		4
NAS147-24	R43B88672		8
NAS147-26		17 - 39	24
NAS147-29	R43B88683	18 -108	8
NAS147-32		108 -107	2
NAS147-36		108 -109	1
NAS148-23			4
NAS148-24			4
NAS148-25		177 - 49	8
NAS148-34		177 - 43	4
NAS148-72		156 - 19	2
NAS148-91		37 - 15	2
NAS148-92	R43B88860	189 - 19	1
NAS149-29		124 - 3	2
NAS149-38	R43B88900-120	14 - 63	24
NAS149-41			4
NAS149-48			4
NAS149-54			4
NAS149-56			4
NAS149-86		37 - 17	2
NAS150-28			2
NAS150-34	R43B89056-38		4
NAS150-38	R43B89056-46	14 - 6	8
NAS150-39	R43B89056-48	14 - 62	16
NAS150-59			1
NAS150-65			1
NAS150-79	R43B89085	156 - 2	2
NAS156-58		114 - 3	4
NAS156-64			4
NAS156-67		14 - 5	8
NAS170-5	R82C485826	23 - 41	4
NAS178-4-4	R43335300-8		4
NAS178-8-17	R43R335417		4
NAS178-8-21	R43R335421		4
NAS179-14	R43C12040		242
NAS179-16	R43C12052		10
NAS179-18	R43C12060		12
NAS179-20	R43C12070		24
NAS179-4	R43C11090		187
NAS179-8	R43C12010		8
NAS201-440BC12	SUB R43S147020	86 - 21	1
NAS201-440BC6	SUB R43S147009	86 - 19	2
NAS201-832BC14			8
NAS203-832BC12	SUB R43S149394	39 -	3
NAS229-10	R43S192890-50	4 -	400
NAS229-10R10		42 - 2	4
NAS229-11	R43S192890-55	5 - 24	610
NAS229-12	R43S192900-4	4 -	318
NAS229-13	R43S192900-6	136 - 72	52
NAS229-14	R43S192900-8	18 - 40	23
NAS229-15	R43S192900-10	4 -	47
NAS229-16	R43S192900-12	95 -	82
NAS229-17	R43S192900-14	15 - 23	53
NAS229-18	R43S192900-16	15 - 15	103
NAS229-19	R43S192900-18		23
NAS229-20	R43S192900-20	193 -	9
NAS229-21	R43S192900-22	28 -	25

PART NUMBER	STOCK NUMBER	FIGURE & INDEX NO.	QTY. PER A/C
NAS229-22	R43S192900-24	88 - 20	25
NAS229-23	R43S192900-26		8
NAS229-24	R43S192900-28		6
NAS229-25	R43S192900-30		11
NAS229-26	R43S192900-32		2
NAS229-27	R43S192900-34		9
NAS229-28	R43S192900-36	88 - 16	9
NAS229-29	R43S192900-38	131 -	10
NAS229-30	R43S192900-90		1
NAS229-31	R43S192900-92	82 - 2	12
NAS229-32	R43S192900-94		1
NAS229-33	R43S192900-96		1
NAS229-34		15 - 19	6
NAS229-35	R43S192900-100	74 - 48	2
NAS229-4	R43S192890-20		1
NAS229-5	R43S192890-25	65 - 12	20
NAS229-6	R43S192890-30	95 -	135
NAS229-7	R43S192890-35	45 -	134
NAS229-8	R43S192890-40	53 -	3027
NAS229-9	R43S192890-45	15 -	600
NAS229BZP8	R43S158865-50		8
NAS229BZP9	R43S158865-55	53 -	1
NAS229BZ15			1
NAS229BZ21		39 -	2
NAS229BZ23		39 -	2
NAS229BZ8	R43S159118-16		3
NAS229DD13	R43S55001-26		2
NAS229DD14	R43S55001-28		6
NAS229DD15	R43S55001-30		8
NAS229DD17			4
NAS229DD9	R43S55001-18	47 -	28
NAS230-14	R43S192910-70	136 - 49	8
NAS230-16	R43S192910-80	18 - 43	48
NAS230-17	R43S192910-85	95 - 84	8
NAS230-24	R43S192910-115	86 - 16	2
NAS230-8	R43S192910-40		2
NAS302-02-0471		138 - 38	1
NAS302-23-0710		138 - 40	1
NAS303-01-0956		115 - 1	1
NAS303-01-1833		115 - 5	1
NAS303-13-0237		115 - 10	1
NAS303-13-0430		115 - 13	1
NAS312-20-		52 - 20	3
NAS313-20-0135		115 - 12	1
NAS313-20-0386	R82NAS-313-20-0386	115 - 15	1
NAS313-21-1201		59 - 19	1
NAS314-10-0087		146 - 65	1
NAS314-11-0234	R82NAS-314-11-0234	146 - 66	1
NAS323R22-0083		91 - 9	1
NAS323R22-0106		91 - 4	1
NAS323R23-0096		91 - 6	1
NAS324-11-0101	R82NAS-324-11-0101	147 - 8	1
NAS324-11-0276		146 - 67	1
NAS333CFA10-5			4
NAS333CFA7-5			4
NAS42-4-24	*R44T6213	160 - 35	2
NAS42-6-26		189 - 12	4
NAS42C4-17	*R44T5233-53	164 - 21	4
NAS42C5-118			3
NAS42C6-26			4
NAS42C8-22			4
NAS42DD3-16A	*R44T3349	45 - 53	2
NAS42DD3-28			2
NAS42DD3-56			1
NAS42DD4-12	*R44T3355		4
NAS42DD4-16A			2
NAS42DD4-22	*R44T3355	119 - 8	1
NAS42DD4-8			4
NAS42DD4-9			4
NAS42DD5-23	*R44T3361-5		4
NAS42DD5-59			1
NAS42DD5-73A			1
NAS42DD6-10		74 - 28	1
NAS42DD6-10A			2
NAS42DD6-11	*R44T3367-40	23 - 46	4
NAS42DD6-12	*R44T3367-40		4
NAS42DD6-13	*R44T3367-40	85 - 30	1
NAS42DD6-16A	*R44T3367-40		6
NAS42DD6-20		64 -	8
NAS42DD6-21	*R44T3367-40	85 - 29	1
NAS42DD6-28A	*R44T3367-40		4
NAS42DD6-32	*R44T3367-40		7
NAS42DD6-36	*R44T3367-40	13 - 20	12
NAS42DD6-38			1
NAS42DD6-39	*R44T3367-40	13 - 19	10
NAS42DD6-57	*R44T3367-40		2
NAS42DD6-59	*R44T3367-40	74 - 27	1
NAS42DD8-18	*R44T3372	110 - 19	4
NAS42HT10-42			2
NAS42HT10-43			2
NAS42HT10-65		87 - 21	2
NAS42HT10-66		87 - 20	2
NAS42HT4-4			136
NAS42HT4-9			4
NAS42HT6-22		166 - 21	18
NAS42HT6-51		166 - 21	18

* INDICATES MAKE FROM

PART NUMBER	STOCK NUMBER	FIGURE & INDEX NO.	QTY. PER A/C
NAS42HT6-6			4
NAS42HT6-7			4
NAS424-10D		128 - 12	1
NAS428-3-10	R43B25020		4
NAS428-3-16	R43B25032	14 -100	2
NAS428-3-7	R43B25014		1
NAS428-4-10	R43B25120	164 - 28	2
NAS428-4-7	R43B25116	140 - 38	2
NAS428-4-8			2
NAS428-416			1
NAS428-5-20	R43B25243		1
NAS428-5-40		45 -	1
NAS428H3-6	R43B28012		1
NAS428H4-10	R43B28120	4 -	8
NAS428H4-11	R43B28122	147 - 28	1
NAS428H4-12	R43B28124	57 - 47	4
NAS428H4-14		56 - 34	1
NAS428H4-16		56 - 50	2
NAS428H4-24		56 - 24	1
NAS428H4-7		140 - 38	1
NAS428H5-24		119 - 21	9
NAS428K3-10	R43B26018	85 - 25	6
NAS428K4-6	R43B26112	75 - 29	2
NAS43-10-64		26 - 26	4
NAS43-14-8		137 - 5	1
NAS43-3-10	*R44T6220		1
NAS43-3-118		161 - 16	1
NAS43-3-12	*R44T6220	53 - 33	4
NAS43-3-13	*R44T6220	167 - 11	1
NAS43-3-15	*R43T6220	85 - 21	2
NAS43-3-17		54 - 80	2
NAS43-3-18	*R44T6220	167 - 24	1
NAS43-3-19			1
NAS43-3-20	*R44T6220		4
NAS43-3-22			2
NAS43-3-24	*R44T6220		2
NAS43-3-25	*R44T6220		1
NAS43-3-26	R43S826846	183 - 40	4
NAS43-3-27	*R44T6220	167 - 11	1
NAS43-3-32	*R44T6220	100 - 44	18
NAS43-3-34	*R44T6220		1
NAS43-3-36	*R44T6220	46 -145	1
NAS43-3-38			1
NAS43-3-47	*R44T6220	54 - 74	1
NAS43-3-48	*R44T6220	105 -	12
NAS43-3-5	R43S826804	90 - 13	2
NAS43-3-61	*R44T6220	54 - 5	2
NAS43-3-64	*R44T6220		1
NAS43-3-66			3
NAS43-3-74	*R44T6220		2
NAS43-3-76	*R44T6220	108 -	10
NAS43-3-8	R43S826810	142 - 9	4
NAS43-3-83	*R44T6220	147 - 23	1
NAS43-3-96	*R44T6220		3
NAS43-4-11			1
NAS43-4-127		147 - 44	1
NAS43-4-20	*R44T6230	41 - 19	4
NAS43-4-31			2
NAS43-4-4			2
NAS43-4-87	*R44T6230	53 - 54	2
NAS43-4-9		59 - 16	1
NAS43-4-91	*R44T6230	53 - 55	1
NAS43-5-16	*R44T6234-10		1
NAS43-5-23	*R44T6234-10	54 - 74	1
NAS43-5-27	*R44T6234-10	180 - 53	2
NAS43-6-18		46 -146	1
NAS43-6-48	*R44T6239		1
NAS43-6-52	*R44T6239	183 - 39	2
NAS43-6-77	*R44T6239	54 - 4	1
NAS43-7-14		48 - 7	24
NAS43-7-36	*R44T6244-15	48 - 6	8
NAS43-7-40	*R44T6244-15		4
NAS43-8-9	*R44T6250	53 - 43	1
NAS43-9-62			1
NAS43-9-64			1
NAS43C3-32			2
NAS43C4-104		183 - 15	2
NAS43C4-12		183 - 13	2
NAS43C4-47	R46S1195-812	183 - 14	2
NAS43DD1-155	*R44T3354	152 - 15	2
NAS43DD1-39	*R44T3354	99 - 23	2
NAS43DD1-45	*R44T3354	46 -	2
NAS43DD1-8	*R44T3354		4
NAS43DD12-28		57 - 33	2
NAS43DD3-10	*R44T3360		6
NAS43DD3-11	*R44T3360		3
NAS43DD3-12			4
NAS43DD3-16	*R44T3360		33
NAS43DD3-17	*R44T3360		5
NAS43DD3-18	*R44T3360		1
NAS43DD3-19	R43S814036	166 - 22	39
NAS43DD3-20	R43S814038	63 -	11
NAS43DD3-21			1
NAS43DD3-22			2
NAS43DD3-23		84 - 8	13
NAS43DD3-24	R43S814046	63 -	17

* INDICATES MAKE FROM

PART NUMBER	STOCK NUMBER	FIGURE & INDEX NO.	QTY. PER A/C
NAS43DD3-25	*R44T3360		9
NAS43DD3-26	*R44T3360		31
NAS43DD3-26A			2
NAS43DD3-27	*R44T3360	84 - 7	3
NAS43DD3-28	*R44T3360		7
NAS43DD3-29	*R44T3360		2
NAS43DD3-29A			3
NAS43DD3-30	R43S814054		16
NAS43DD3-32	*R44T3360	28 -	75
NAS43DD3-32A			15
NAS43DD3-33	*R44T3360		3
NAS43DD3-34	*R44T3360		1
NAS43DD3-35	*R44T3360	128 - 27	7
NAS43DD3-36	*R44T3360	70 -	16
NAS43DD3-38	*R44T3360	28 -	4
NAS43DD3-4			4
NAS43DD3-40	R43S814074		8
NAS43DD3-42	*R44T3360		5
NAS43DD3-44	*R44T3360	132 -	10
NAS43DD3-47			3
NAS43DD3-48	*R44T3360	100 - 2	51
NAS43DD3-48A			4
NAS43DD3-50			3
NAS43DD3-52	*R44T3360	158 -	4
NAS43DD3-56	*R44T3360	167 - 15	4
NAS43DD3-59	*R44T3360		3
NAS43DD3-60	*R44T3360		2
NAS43DD3-64	*R44T3360	136 -	12
NAS43DD3-64A	*R44T3360		1
NAS43DD3-66	*R44T3360	82 - 4	2
NAS43DD3-72			2
NAS43DD3-8	*R44T3360		4
NAS43DD3-88	*R44T3360		1
NAS43DD3-9	R43S814016	52 - 4	3
NAS43DD3-93		143 - 12	4
NAS43DD4-130		10 - 25	4
NAS43DD4-15			2
NAS43DD4-248			2
NAS43DD4-32	*R44T3366	159 -	4
NAS43DD4-48	*R44T3366		2
NAS43DD4-53	*R44T3366		2
NAS43DD4-54		55 - 98	2
NAS43DD4-76	*R44T3366	55 -	1
NAS43DD5-13		168 - 51	1
NAS43DD5-30		138 - 24	2
NAS43DD6-20	*R44T3380	74 - 27	10
NAS43DD6-75			1
NAS43DD6-91		55 -	2
NAS43DD8-14			4
NAS43HT3-22		19 - 15	8
NAS43HT3-8	*R44T6220	156 - 32	1
NAS43HT5-10		110 - 22	4
NAS45-10-1	R17P439-442		1
NAS464-10A23	R43B75884-115	37 - 8	12
NAS464-10A29			2
NAS464-10A31			2
NAS464-10A33			2
NAS464-10A35			4
NAS464-10A39	R43B75884-195		4
NAS464-10A43			4
NAS464-10A67			4
NAS464-12-48	R43B75856-240	150 - 6	1
NAS464-12-49			1
NAS464-12A32		194 - 15	11
NAS464-12A36			4
NAS464-12A38	R43B75886-190		4
NAS464-12A42	R43B75886-210		8
NAS464-12A48		138 - 28	5
NAS464-12A52			4
NAS464-12A70			2
NAS464-12A72			2
NAS464-14-93			2
NAS464-14A39			4
NAS464-14A43			6
NAS464-14A45			2
NAS464-14A49			4
NAS464-14A53			4
NAS464-14A93		144 - 2	3
NAS464-3-24			2
NAS464-3-26	R43B75840-130		2
NAS464-3-6	R43B75840-30		3
NAS464-3A12	R43B75870-60		2
NAS464-3A16	R43B75870-80	130 -	4
NAS464-3A21	R43B75870-105	75 - 3	7
NAS464-3A24	R43B75870-120	56 - 2	1
NAS464-3A4	R43B75870-20		16
NAS464-3A5	R43B75870-25	185 - 88	30
NAS464-3A6	R43B75870-30		46
NAS464-3A7	R43B75870-35		20
NAS464-4-12	R43B75842-60		1
NAS464-4-15	R43B75842-75	116 - 59	2
NAS464-4-17	R43B75842-85		2
NAS464-4-34	R43B75842-170	55 - 94	
NAS464-4-47		10 - 23	2
NAS464-4-6	R43B75842-20		8

* INDICATES MAKE FROM

PART NUMBER	STOCK NUMBER	FIGURE & INDEX NO.	QTY. PER A/C
NAS464-4A10			3
NAS464-4A11	R43B75872-55	140 - 8	4
NAS464-4A12	R43B75872-60	57 - 26	5
NAS464-4A13	R43B75872-65	57 - 16	2
NAS464-4A14	R43B75872-70	10 - 17	58
NAS464-4A15	R43B75872-75	26 - 2	61
NAS464-4A16	R43B75872-80	2 - 5	19
NAS464-4A17	R43B75872-85	10 - 6	10
NAS464-4A18	R43B75872-90	55 - 74	3
NAS464-4A19	R43B75872-95	2 - 6	8
NAS464-4A20	R43B75872-100	10 - 48	10
NAS464-4A21	R43B75872-105	146 - 74	1
NAS464-4A23	R43B75872-115	116 - 66	3
NAS464-4A24	R43B75872-120	154 - 2	3
NAS464-4A25	R43B75872-125	140 - 11	1
NAS464-4A26	R43B75872-130	57 - 43	1
NAS464-4A31			4
NAS464-4A33	R43B75872-165	147 - 19	3
NAS464-4A34	R43B75872-170	55 - 94	1
NAS464-4A35			2
NAS464-4A36			6
NAS464-4A37			2
NAS464-4A39	R43B75872-195	146 - 58	6
NAS464-4A42	R43B75872-210	146 - 57	6
NAS464-4A49	R43B75872-245	26 - 17	2
NAS464-4A5	R43B75872-25	108 -	2
NAS464-4A6	R43B75872-30	17 - 4	13
NAS464-4A7	R43B75872-35	17 - 4	77
NAS464-4A75		146 - 82	1
NAS464-4A8	R43B75872-40		2
NAS464-4A9	R43B75872-45	23 - 49	14
NAS464-5-11	R43B75844-55		9
NAS464-5-14			2
NAS464-5-28	R43B75844-140	178 - 44	2
NAS464-5-53	R43B75844-265	55 -132	2
NAS464-5-8	R43B75844-40		8
NAS464-5A10			8
NAS464-5A11			37
NAS464-5A12			4
NAS464-5A13		154 - 6	3
NAS464-5A14			2
NAS464-5A15		183 - 3	2
NAS464-5A16			17
NAS464-5A17			12
NAS464-5A18		146 - 42	1
NAS464-5A20	R43B75874-100	55 - 31	7
NAS464-5A21		55 - 41	2
NAS464-5A22		117 - 18	2
NAS464-5A23		146 -103	8
NAS464-5A24		150 - 12	8
NAS464-5A25		55 - 18	1
NAS464-5A30		57 - 45	1
NAS464-5A31			1
NAS464-5A32		55 - 76	1
NAS464-5A33		145 - 27	5
NAS464-5A34		147 - 25	1
NAS464-5A35		146 -121	1
NAS464-5A47		56 - 10	1
NAS464-5A49		154 - 7	1
NAS464-5A5	R43B75874-25		2
NAS464-5A53			2
NAS464-5A59		116 - 79	1
NAS464-5A6			8
NAS464-5A7			14
NAS464-5A8	R43B75874-40		16
NAS464-5A9		37 - 24	9
NAS464-6-69	R43B75846-345	55 - 63	1
NAS464-6-71		55 - 51	1
NAS464-6A10		37 - 21	68
NAS464-6A12		37 - 20	12
NAS464-6A13		164 - 23	18
NAS464-6A14			8
NAS464-6A15		37 - 27	12
NAS464-6A16		182 - 47	12
NAS464-6A17			8
NAS464-6A18		108 -106	1
NAS464-6A21		108 -110	13
NAS464-6A22		108 -108	17
NAS464-6A24		116 - 74	6
NAS464-6A29	R43B75876-145	146 - 76	2
NAS464-6A31		146 - 78	1
NAS464-6A33		147 - 20	1
NAS464-6A49	R43B75876-245	154 - 24	1
NAS464-6A51		116 - 75	1
NAS464-6A6			2
NAS464-6A8			3
NAS464-6A9			1
NAS464-7-10	R43B75848-40		14
NAS464-7-14	R43B75848-60		1
NAS464-7A10		37 - 22	20
NAS464-7A12			14
NAS464-7A14			1
NAS464-7A16			12
NAS464-7A18		108 -105	20
NAS464-7A20			8
NAS464-7A22			8

PART NUMBER	STOCK NUMBER	FIGURE & INDEX NO.	QTY. PER A/C
NAS464-7A38	R43B75878-190	184 - 12	2
NAS464-7A8			2
NAS464-8-10	R43B75850-50		2
NAS464-8A14			4
NAS464-8A16			2
NAS464-8A18		108 - 49	2
NAS464-8A20		145 - 3	4
NAS464-8A24			4
NAS464-8A26		145 - 2	6
NAS464-8A32		11 - 2	4
NAS464-8A34		11 - 3	4
NAS464-8A62			2
NAS464-8A65		18 - 55	2
NAS464-9A21			4
NAS464-9A23			14
NAS464-9A25	R43B75882-125		4
NAS464-9A27			18
NAS464P10A19		146 -	1
NAS464P10A27			2
NAS464P10A31			2
NAS464P10A33			2
NAS464P12-22			4
NAS464P16A34		10 - 2	2
NAS464P3-10			8
NAS464P3-8			12
NAS464P4-21			6
NAS464P4-6			40
NAS464P4A14			8
NAS464P4A16			6
NAS464P4A17			3
NAS464P4A19		28 - 64	7
NAS464P4A20			2
NAS464P4A21			6
NAS464P4A23			6
NAS464P4A24			2
NAS464P4A38			2
NAS464P4A47			2
NAS464P4A7			2
NAS464P4A9		146 -	12
NAS464P5A10			4
NAS464P5A11			4
NAS464P5A13			12
NAS464P5A14			12
NAS464P5A28			4
NAS464P5A29			2
NAS464P5A30			4
NAS464P5A41		176 - 13	2
NAS464P5A45		176 - 12	4
NAS464P6-7			16
NAS464P6-9			16
NAS464P6A25		182 - 16	2
NAS464P6A55			1
NAS464P7A16			6
NAS464P7A18			4
NAS464P8-18		124 - 13	1
NAS464P8A20			2
NAS464P8A24		174 - 7	12
NAS464P8A26			4
NAS464P9A23			2
NAS464P9A37		177 - 35	2
NAS464P9A39		177 - 34	2
NAS497	R45F745	4 -	107
NAS50-100	R42R2900	134 - 20	10
NAS50-106	R42R2902	24 - 4	9
NAS50-118	R42R2895-250	157 - 10	2
NAS50-137	R42R2908	31 - 5	21
NAS50-150	R42R2910	144 - 8	1
NAS50-175	R42R2913	12 - 11	4
NAS50-193	R42R2916	29 - 11	4
NAS50-206	R42R2917-25	145 - 11	3
NAS50-387	R42R2929	56 - 42	1
NAS50-75	R42R2890	54 - 86	1
NAS50-81	R42R2892	187 - 25	1
NAS50-87	R42R2893	29 - 28	7
NAS500F-DD10			8
NAS500W-DD10			72
NAS500W-DD416			24
NAS500WK-C10			3
NAS500WK-DD10			8
NAS501-3H6A		96 - 8	2
NAS502-10			12
NAS502-12			4
NAS502-6	R77B368-00611-8106		24
NAS502-8			20
NAS509-10			2
NAS509-12		151 - 3	1
NAS509-14			2
NAS509-4		110 - 30	4
NAS509-5	R43NAS-509-5	154 - 11	1
NAS51-18	R42R2790	75 - 11	2
NAS51-237	R42R2885-150	185 - 84	1
NAS51-25	R42R2800	87 - 7	
NAS51-31	R42R2810	94 - 34	2
NAS51-37	R42R2820	185 - 32	1
NAS51-50	R42R2840	185 - 36	2
NAS51-56	R42R2846	92 - 6	1

PART NUMBER	STOCK NUMBER	FIGURE & INDEX NO.	QTY. PER A/C
NAS516-1		10 -	50
NAS72-10-009	R77B600394-9	185 - 16	2
NAS72-10-011	R77B600394-11	185 - 11	2
NAS72-10-014	R77B600394-14	37 - 9	2
NAS72-10-104	R77B600394-104	183 - 27	2
NAS72-10-313	R77B600394-313	180 - 33	2
NAS72-12-008	R77B600408-8	138 - 28	2
NAS72-12-015	R77B600408-15	180 - 24	4
NAS72-14-013	R77B600746-13	184 - 29	2
NAS72-3-005	R77B600359		2
~~NAS72-3-007~~	R77B600359-7	23 - 36	2
NAS72-3-011	R77B600359-11	23 - 47	4
NAS72-3-012	R77B600359-12	54 - 65	1
NAS72-4-005	R77B600360		6
NAS72-4-006	R77B600361		2
NAS72-4-007	R77B600366-7	52 - 38	1
NAS72-4-011	R77B600366-11	54 - 47	2
NAS72-4-013	R77B600366-13	54 - 48	1
NAS72-4-102	R77B600365	9 - 3	16
NAS72-4-103	R77B600366-103	194 - 26	3
NAS72-4-105	R77B600366-105	23 - 51	2
NAS72-4-107	R77B600366-107	182 - 26	2
NAS72-4-200	R77B600366-200	183 - 53	2
NAS72-4-212			2
NAS72-5-005	R77B600367	23 - 25	8
NAS72-5-006	R77B600373-6		2
NAS72-5-007	R77B600373-7	41 - 17	2
NAS72-5-008	R77B600368	182 - 10	2
NAS72-5-013	R77B600373-13	23 - 13	7
NAS72-5-014	R77B600373-14	32 - 35	8
NAS72-5-100	R77B600373-100		8
NAS72-5-103	R77B600373-103	184 - 3	2
NAS72-5-105	R77B600373-105	184 - 2	2
NAS72-5-112			2
NAS72-5-214	R77B600373-214	178 - 6	2
NAS72-6-006	R77B600342-6	73 - 24	1
NAS72-6-007	R77B600342-7	179 - 20	2
NAS72-6-009	R77B600342-9	54 - 3	1
NAS72-6-010	R77B600342-10	73 - 26	3
NAS72-6-012	R77B600342	23 - 9	6
NAS72-6-100	R77B600342-100	182 - 17	10
NAS72-6-102	R77B600342-102	180 - 25	2
NAS72-6-109	R77B600342-109	73 - 16	1
NAS72-7-007	R77B600341-7	164 - 2	2
NAS72-7-012	R77B600341-12	23 - 3	8
NAS72-7-201	R77B600341-201	23 - 31	4
NAS72-8-005	R77B600372-5		4
NAS72-8-011	R77B600372-11	184 - 30	1
NAS72-8-013	R77B600372-13	185 - 12	1
NAS72-8-206	R77B600372-206	156 - 20	2
NAS73-3-006	R77B600249-6	185 - 30	1
NAS73-3-007	R77B600249-7	85 - 27	1
NAS73-4-014	R77B600251-14	74 - 30	1
NAS73-4-102	R77B600251-102	166 - 30	4
NAS74A3-007	R77B600313-7	63 - 64	5
NAS74A3-105			4
NAS74A4-005	R77B600409-5	23 - 5	13
NAS74A4-006	R77B600409-6	23 - 23	6
NAS74A4-011	R77B600409-11-5	183 - 42	2
NAS74A4-014	R77B600409-14-5	86 - 16	2
NAS74A4-110	R77B600409-110	156 - 27	2
NAS74A5-012	R77B600426-12	32 - 5	4
NAS75-4-028	R77B600376-28	32 - 34	8
NAS75-5-016	R77B34777	194 - 30	6
NAS76A3-008	R77B600294-8	75 - 12	2
NAS76A4-010	R77B600299-10	115 - 33	1
NAS76A4-016	R77B600299-16	23 - 49	4
NAS76A4-026	R77B600299-26	115 - 33	
NAS76A6-016P	R77B600424-16	157 - 15	2
NAS76A8-012P	R77B600430-12	182 -	2
NAS77-10-22	R77B600392-22	23 - 6	8
NAS77-6-32	R77B600390-32	179 -	2
NAS77A6-21	R77B600638-21	8 - 2	16
NAS77A6-33P	R77B600323-33	28 - 88	8
NU-V5-3/46	R42F75750	96 - 20	8
PAC2391-1		65 - 70	1
PAC2393-1	R83PC-PAC2393-1	125 - 29	1
PAC2472	R83PC-PAC2472	65 - 15	1
PAC2473	R83PC-PAC2473	66 - 8	1
PC3-1/2	R42F24290-300	74 - 22	112
		74 - 44	
		74 -	
		74 - 61	
		74 - 63	
		74 -	
		76 - 16	
		77 - 14	
		78 - 16	
		79 - 21	
		79 - 31	
		79 - 43	
		79 - 59	
		79 - 62	
		80 - 18	
PF3-1/2-38	R42F24290-400	74 - 20	100
		74 - 44	

PART NUMBER	STOCK NUMBER	FIGURE & INDEX NO.	QTY. PER A/C
PF3-1/2-38		74 -	
		74 - 61	
		74 - 63	
		76 - 16	
		77 - 14	
		78 - 16	
		79 - 19	
		79 - 31	
		79 - 59	
		79 - 62	
		80 - 18	
PF3-1/2-39		79 - 43	6
PP-493/APG-30		42 - 41	1
PRA3-1/2	R42F24290-335		29
PS3-1/2	R42F24290-350	74 - 21	100
		74 - 44	
		74 -	
		74 - 61	
		74 - 63	
		76 - 16	
		77 - 14	
		78 - 16	
		79 - 20	
		79 - 31	
		79 - 43	
		79 - 59	
		79 - 62	
		80 - 18	
P1120		53 - 80	2
P116-421-14-3G	R42F59575-14	143 - 14	4
P116-447-16-24A	R42F59585-16	47 -	1
P2B375XA	R17J0MI-P2B375XA	96 - 5	1
QS200M12S		89 - 13	1
QS200M68S	R42C18632-300-68	65 - 25	2
QS200M8S		89 - 14	1
QS200M80S	R42C18632-300-80	65 - 23	2
R-101/ARN-6	R16R2036	98 - 41	1
RA20A2FD502FK		79 - 13	2
RA2000-000256		90 - 14	1
RA206-29		90 - 21	1
RA2258-3	R12C26	53 - 47	1
RA2500-3	R82ACA-RA2500-3	53 - 46	16
RC20GE201J		74 - 54	2
		98 - 20	
RD205SB7L	R43I14506-15	83 -	70
		163 - 10	
		177 - 63	
RD206SB8	R43I14508-5	57 - 50	2
RD206SB8L	R43I14508-15	177 - 41	15
RD207SB9L	R43I14510-15	119 -	36
		120 -	
		121 -	
		177 - 61	
RD208SB10L		177 - 59	4
RD210SB12L		177 - 60	28
RD312SB16L		177 - 62	4
RD7440A	R86RO-RD7440A	54 - 89	1
RE-120/ARA-25	R16AN-RE120/ARA25	95 - 71	1
REB3N	R77B5875-112	33 - 1	2
RE3H5	R77B553-00377-0004	146 -	4
RE4F5	R77B557-00465-0004	10 - 8	15
		10 - 18	
		55 - 80	
		57 - 12	
		58 - 1	
		117 - 13	
		117 - 23	
		146 - 98	
RE4H6	R77B553-00467-0004	10 - 30	49
		10 - 11	
		10 - 21	
		26 - 7	
		26 - 14	
		26 - 31	
		55 - 5	
		55 - 13	
		55 - 21	
		55 - 23	
		55 - 36	
		55 - 46	
		55 - 58	
		55 - 69	
		55 - 82	
		55 - 89	
		55 -108	
		55 -127	
		57 - 13	
		61 - 6	
		61 - 21	
		61 - 32	
		116 - 16	
		116 - 18	
		116 - 27	
		116 - 36	
		116 - 43	
		116 - 52	

PART NUMBER	STOCK NUMBER	FIGURE & INDEX NO.	QTY. PER A/C
RE4H6		117 - 6	
		117 - 15	
		117 - 25	
		146 - 6	
		146 - 13	
		146 - 22	
		146 - 26	
		146 - 36	
		146 - 45	
		146 - 48	
		148 - 3	
		148 - 18	
		155 - 3	
RE4M6	R77B995-51004-0000	10 - 28	48
		10 - 38	
		26 - 3	
		26 - 11	
		26 - 23	
		55 - 3	
		55 - 11	
		55 - 34	
		55 - 44	
		55 - 56	
		55 - 67	
		55 - 87	
		55 -106	
		55 -125	
		56 - 30	
		61 - 3	
		61 - 18	
		61 - 29	
		116 - 25	
		116 - 34	
		116 - 41	
		116 - 60	
		117 - 4	
		146 - 4	
		146 - 11	
		146 - 29	
		146 - 39	
		148 - 7	
		148 - 12	
RE4S10		55 - 21	3
		55 - 82	
		116 - 16	
		117 - 25	
		146 - 22	
		146 - 48	
RE5M7	R77B551-00555-0004	146 -110	4
		146 -118	
RL23SB7	R43L11008	163 - 10	38
RL24SB7	R43L11009-100	36 -	46
		83 -	
		177 - 63	
RL27SB8	R43L11010	57 - 50	3
RL28SB8	R43L11011	45 -	23
		140 -	
		172 - 23	
		177 - 41	
RL31SB9		119 -	36
		120 -	
		121 -	
		177 - 61	
RL38SB9	R43L11015	120 -	6
		177 - 59	
RL56SB11		177 - 60	28
RL72SB11		177 - 62	4
RRT137S		108 -	2
		109 -	
RRT143S		108 -	2
		109 -	
RRT225C		22 - 3	2
RR256C	R42R3070-256	18 -	4
RR525C		95 - 50	1
RS100		119 -	5
		121 -	
		126 - 5	
RS102		46 -	17
		47 -	
		106 -	
		139 - 28	
		139 -	
		140 -	
		141 -	
RS106A60		43 - 38	3
		130 - 94	
		135 -110	
RS108A60		50 - 16	1
RS109	R43S30600	46 -	17
		47 -	
		106 -	
		139 - 29	
		139 -	
		140 -	
		141 -	
RS98		32 - 2	8

PART NUMBER	STOCK NUMBER	FIGURE & INDEX NO.	QTY. PER A/C
RS98		32 - 16	
RT-160/APN-22		2 - 3	2
RT-178/ARC-27	R16CR505-0173-006	95 - 77	1
RT-181/APG-30		42 - 37	1
RW11G2R0	R16JAN-RW11G2R0	97 - 1	1
RW11G5R6		160 - 21	1
RW15G2R0		160 - 25	1
RW30GR80		84 - 17	1
RW30G100		105 - 55	1
RW30G111		105 - 59	1
RW30G250		105 - 56	1
RW30G351	R16MIL-RW30G351	101 - 6	1
RW30G450		105 - 57	1
RW30G630		105 - 73	1
RW30G710		105 - 58	1
RW31G100		105 - 52	1
RW31G180		105 - 51	1
RW31G220		105 - 5	1
RW31G250		105 - 7	1
RW31G310		105 - 50	1
RW31G4R0		105 - 53	1
RW31G400		105 - 49	1
RW31G560		105 - 4	3
RW31G710		105 - 6	1
RW33G140		105 - 35	1
RW33G162		103 -	3
RW33G250		105 - 9	1
RW33G450	R16JAN-RW33G450	105 - 10	1
RW33G5R3		105 - 34	1
RW33G5R6		105 - 34	1
RW34G5R3		105 - 36	1
RW34G5R6		105 - 36	1
RW34G8R0		105 - 21	1
RW35G100		105 - 71	2
RW35G120		105 - 64	1
RW40G100		105 - 23	2
		105 - 33	
RW40G2R0		105 - 62	1
RW40G280		105 - 61	1
RW40G4R0		105 - 22	1
R0000-005		90 - 23	1
R0000-0002		90 - 12	1
R144M12-2	R82ARBN-R144M12-2	150 - 13	1
R144M23-1		154 - 26	1
R16G1R0		100 - 22	1
R206SB12L		172 - 23	2
R206SB8	R43I14508	140 - 55	3
R208SB10	R43I14512	120 -	2
R534	R82ARBN-R534	88 - 8	1
R624-1	R17M3184-57	54 - 91	1
R83F300535	R83F300535	65 - 51	1
R83PR2867A1	R83PR2867A1	74 - 14	1
R83V65300	R83V65300	65 - 35	1
R88A0140-015	R88A0140-015	81 - 56	1
R88A0211-000-000	R88A0211-000-000	95 - 53	1
R88A0351-011	R88A0351-011	81 - 40	1
R88A0486-000	R88A0486-000	99 - 25	1
R88A0554-045-000	R88A0554-000	95 - 87	1
R88C0152-000		73 - 41	1
R88C0195-000	R88C0195-000	84 - 1	3
R88C0779-525	R88C0779-525	73 - 40	1
R88C1333-005	R88C133-005	136 - 48	1
R88C1333-105-000		99 - 8	1
R88C1338-005-000	R88C1338-005-000	99 - 27	1
R88C1607-015	R88C1607-015	79 - 32	1
R88C583-011	R88C583-011	81 - 30	1
R88G1320-050	R88G1320-050	190 - 16	1
R88H0500-000	R88H0500-000	73 - 42	1
R88H0570-000	R88H0570-000	84 - 2	2
R88I0474-100	R88I0474-100	81 - 32	1
R88I0625-000	R88I0625-000	81 - 55	1
R88I0750-110	R88I0750-110	81 - 41	1
R88I1208-000	R88I1208-000	81 - 65	1
R88I1332-000	R88I1332-000	81 - 37	1
R88I1651-035	R88I1651-035	82 - 6	1
R88I1888-000	R88I1888-000	76 - 10	1
R88I1931-000	R88I1931-000	82 - 31	1
R88I1937-005	R88I1937-005	82 - 27	1
R88I1937-010	R88I1937-010	82 - 25	1
R88I1937-025	R88I1937-025	82 - 23	1
R88I2600-000	R88I2600-000	81 - 52	1
R88I2675-025	R88I2675-025	81 - 54	1
R88I3250-025	R88I3250-025	81 - 42	1
R88M108	R88M108	82 - 21	1
R88M117	R88M117	82 - 26	1
R88M80	R88M80	81 - 51	4
		81 - 53	
		82 - 22	
R88R0060-000-000	R88R0060-000-000	95 - 54	1
R88S0210-010	R88S0210-010	146 -132	1
R88S0210-015	R88S0210-015	2 - 4	2
R88S0210-020	R88S0210-020	146 -130	1
R88T1950-050	R88T1950-050	39 - 3	1
R88T1985-000	R88T1985-000	190 - 17	1
R88T2070-000	R88T2070-000	190 - 18	1
R88T2574-000	R88T2574-000	190 - 19	1

PART NUMBER	STOCK NUMBER	FIGURE & INDEX NO.	QTY. PER A/C
R88T2650-000	R88T2650-000	33 - 12	2
R88T2651-230	R88T2651-230	131 - 10	4
R88T2651-240	R88T2651-240	190 - 21	1
R88T2875-000	R88T2875-000	68 - 2	1
R88U0198-005-000	R88U0198-005-000	95 - 40	2
R88U0208-005	R88U0208-005	136 - 70	1
R94BUA51A140	R94BUA51A140	105 - 88	4
R94C550077	R94C550077	105 - 88	4
SA3949-4	R82ACA-SA3949-4	94 - 15	1
SA4187-1	R82ACA-SA4187-1	54 - 70	1
SA4187-2	R82ACA-SA4187-2	54 - 25	1
SA4187-3		54 - 25	1
SA4188-1	R82ACA-SA4188-1	54 - 30	2
		90 - 11	
SA4188-2	R82ACA-SA4188-2	54 - 16	1
SA4188-3	R82ACA-SA4188-3	54 - 59	1
SA4188-5		59 - 4	1
SA4188-6		59 - 14	1
SF101-9SA18A	R43S1956-40	36 -	12
SF111-11SA12A	R43S1956-28	45 - 55	4
SK1086	R16SFW-SK1086	98 - 24	4
		98 - 31	
SK1091	R16SFW-SK1091	98 - 23	4
		98 - 30	
SK1125	R17SFW-SK1125	98 - 22	4
		98 - 29	
SK7414.2J1452		174 - 5	2
		174 - 6	
SLZ2018	R88T2798-055-000	95 - 43	1
SLZ2020	R88R0365-025-000	95 - 18	1
SLZ2023A	R88I1898-030-000	81 - 25	1
SR6144-21		154 - 15	1
SR6144-9		154 - 17	1
S10-75			25
S10B140			4
S10B190			2
S10B75			2
S10K75	R43R805050		7
S11K3	R33B7500-10	59 - 23	2
S11L31C	R42R850	59 - 21	4
S11L32C	R42R855	59 - 22	2
S1789-1177P1		13 - 9	2FT
		34 -	
		104 -	
S276-1232P2		13 - 4	2
S6K106	R43R804900		1
TA3106ES16-13S		104 - 58	1
TF27607-1		121 - 32	1
TF28707		120 - 70	2
		120 -126	
TF30487-1	R33MS-29513-12	120 - 66	2
	R33P492-2115		
	R85NSH-PK259		
		120 -120	
TF54500	R16TP-TF54500	120 - 68	1
TF55600-3	R86TP-TF55600-3	119 - 66	2
		121 - 31	
TF55886	R86TP-TF55886	120 - 64	2
		120 -118	
TF56700-1	R86TP-TF56700-1	120 - 19	1
TF56700-2	R86TP-7F56700-2	36 - 10	2
TF56800	R86TP-TF56800	120 -124	1
TF56890		120 -	1
TT70342-10		120 - 67	2
		120 -121	
UC3-11		177 - 54	7
UC3-12-002		177 - 52	2
UG160A/U	R16R2436-200	137 - 2	1
UG21B/U	R16P5020	39 - 40	12
		101 - 13	
		102 - 47	
		102 - 48	
		104 - 52	
		104 - 53	
		104 - 54	
		104 - 55	
		137 - 1	
		137 - 92	
		137 - 94	
UG212A/U	R16A409-600	95 -	5
		101 - 39	
		101 - 42	
		101 - 53	
UG23B/U	R16R2436-4	101 - 12	1
UG260/U	R16P3627-600	42 - 26	3
		42 - 27	
		42 - 28	
		42 - 29	
		103 - 24	
UG260U	R16P3627-600	42 - 26	5
UG262/U		101 - 5	2
		103 - 25	
UG27B/U	R16A509	101 - 14	6
		101 - 29	
		101 - 31	
		101 - 58	

PART NUMBER	STOCK NUMBER	FIGURE & INDEX NO.	QTY. PER A/C
UG27B/U		137 - 93	
UG274/U	R16AN-UG274/U	137 - 29	3
		137 - 39	
UG290/U		83 - 31	2
UG306/U	R16A409-450	137 - 41	2
		137 - 45	
UG496/U	R16R2436-1200	46 - 41	4
		47 - 38	
UG58/U	R16R2436-5	39 - 11	1
UG58A/U		68 - 9	1
UG59B/U		104 - 42	7
		104 - 44	
		104 - 45	
		104 - 46	
UG60A/U	R16P3627-450	104 - 43	3
UJ364	R42J938-600	8 - 18	44
		8 - 33	
		25 - 5	
		60 - 3	
		60 - 8	
W98292-11-1.110		112 - 37	1
W98292-2-.210	R42F24230-25-5	50 - 30	4
W98292-2-.220		50 - 31	11
		50 - 32	
		50 - 33	
W98292-2-.240		50 - 30	13
		50 - 32	
		50 - 33	
W98292-3-.260	R42F24230-34	50 - 27	2
W98292-3-.290	R42F24230-37	50 - 31	2
W98292-3-.330		50 - 27	2
W98292-8-.800		107 - 22	2
X121882		167 - 39	6FT
YAV2C-R		128 - 49	2
YAV2C-R1	R17T3627-170-125	128 - 44	1
0-901-4634	R83TRA-0-901-4634	122 - 66	2
01-0052		8 - 29	8
		25 - 18	
		60 - 10	
		60 - 18	
1-1045-76		35 - 33	2
1DRE1409	R33B7425	52 - 25	16
		59 - 20	
1HS1	RMS32066	105 - 81	5
		105 - 82	
		115 - 28	
		137 -103	
10-1344-75		36 - 33	4
		121 - 16	
		123 - 14	
10-40908-171		193 - 3	2
10-42617-52P		193 - 3	2
10NBF1224		21 - 1	8
		21 - 16	
1001-4		123 - 1	9
		191 - 8	
		191 - 76	
		191 - 96	
1001-5		191 - 72	2
1001-8		191 - 72	3
		191 - 84	
10018-40D			1
1002-4		123 - 18	3
		191 - 96	
1002-8		161 - 6	2
		162 - 6	
10061			4
100700	R83AEDS100700	65 - 58	1
100899	R82FAKB100899	65 - 19	1
1010-52		166 - 24	2
101023	R82FAKB101023	126 - 1	1
101024	R82FAKB101024	191 - 15	2
101025	R82FAKB101025	126 - 26	1
101026	R82FAKB101026	126 - 8	1
101027	R82FAKB101027	191 - 12	2
101028	R82FAKB101028	125 - 10	1
101029	R82FAKB101029	125 - 3	1
101030	R82FAKB101030	191 - 31	2
101031	R82FAKB101031	191 - 34	2
1012-4		191 - 54	7
		191 - 67	
		191 - 76	
1012-5		161 - 11	1
1012-8		162 - 12	1
101460			1
101650			2
1023	R16K3323-410	74 - 47	3
	R17F14420-525		
103TTR		138 - 45	1
103000-1		64 - 32	2
103000-3		64 - 32	4
		64 - 36	
103000-4		64 - 36	2
103500-3		35 - 24	2
1046	R17T3649-85	130 - 58	8
		131 -122	

PART NUMBER	STOCK NUMBER	FIGURE & INDEX NO.	QTY. PER A/C
105054	R85A1R105054	126 - 19	1
1058	R16C19576-250	74 - 49	4
10680	R83WAH10680	153 - 7	1
1083	R88H0500-000	73 - 42	1
		67 - 20	2
1084SK514		39 -	5FT
11M601	R33E1010	46 - 50	5FT
11M603	R33E1030	108 - 89	29FT
11M605		47 -127	12FT
11M607		175 - 13	15FT
11M609		45 - 11	8FT
11M710		46 - 5	8FT
11M807		132 - 21	2
1107-4-2.0		65 - 43	1
1111-517832	R83PA1111-517832	120 - 72	1
1111-518115	R83PA1111-518115	163 - 19	1
1111-518117	R83PA1111-518117	36 - 31	1
1111-526821	R83PA1111-526821	36 - 31	2
1111-526823	R83PA1111-526823	121 - 18	
		119 - 20	5
1111-526825	R83PA1111-526825	120 - 26	
		121 - 62	
1111-526828	R83PA1111-526828	120 - 79	1
1111-526829	R83PA1111-526829	120 -111	2
1111-526831	R83PA1111-526831	119 - 38	1
1111-526832	R83PA1111-526832	120 -128	4
1111-526833	R83PA1111-526833	122 - 39	1
1111-548112		36 - 66	2
11274-1		134 - 10	2
11282-1	R82KY11282-1	60 - 20	1
11283-1	R82KY11283-1	60 - 22	1
11284	R82KY11284	60 - 30	1
11520	R83MVEM11520	158 - 69	1
11631		130 - 48	4
		135 - 85	
1171	R83CDC1171	89 - 17	1
117206		41 - 4	2
117311		43 - 29	2
1185-06CX9/32		83 -	6
1185-2CX13/32		134 -	12
1191-10CNX1-1/4		177 - 38	2
1191-10CNX15/16		177 - 40	12
1191-12CNX1-1/8		4 -	2
1191-3CNX9/32	R43I12003	85 -	4
		178 -	
1191-4CNX1/2	R43I12115	119 -	20
		157 - 37	
1191-4CNX1/4	R43I12105-5	4 -	10
		140 - 38	
1191-5CNX5/8	R43I12220	32 -	4
1191-5CN5/16		176 - 21	2
1191-6CNX9/16	R43I12310-10	32 -	5
		46 -	
1195-4AC20			10
1195-4BC12			38
1195-4BC18			18
1195-4BC25			4
1195-4BC6			12
1195-5B12			276
1195-5B25			8
1195-5B6			560
12-3043-1-39		134 - 7	1
12-548-33	R83PA12-548-33	36 - 37	6
		119 - 50	
		120 - 53	
		121 - 23	
12B048	R43N96250	182 - 14	8
		182 - 14	
12B098	R43N96260	188 - 5	4
12NBF1628		21 - 9	2
12020-1		37 - 4	1
		38 - 4	
1211-517140	R83PA1211-517140	120 - 38	1
1211-518174	R83PA1211-518714	120 - 40	1
125002		177 - 57	6
12680		10 - 5	6
127001	R17C11188	100 - 23	4
		160 - 26	
130R0300-9	R83CNL130R0300-9	135 - 78	1
1321-517478	R83PA1321-517478	36 - 38	4
		120 - 51	
		121 - 21	
1321-518321	R83PA1321-518321	119 - 48	1
1323-518228	R83PA1323-518288	120 - 6	2
		121 - 6	
1323-518230	R83PA1323-518230	36 - 58	3
		119 - 22	
1327-512540	R83PA1327-512540	119 - 56	2
		120 - 57	
1327-512843		120 -	1
1327-522241		119 -	2
1327-522299	R83PA1327-522299	120 - 59	1
1327-522300	R83PA1327-522300	119 - 57	1
135D100-1	R83CNL135D100-1	135 - 65	1
1356-512457	R83PA1356-512457	69 - 41	1
1356-512465	R83PA1356-512465	131 - 62	4

PART NUMBER	STOCK NUMBER	FIGURE & INDEX NO.	QTY. PER A/C
1356-512465		132 - 68	
1360-526555	R83PA1360-526555	35 - 20	2
138-01-000	R83SELB138-01-000	163 - 13	1
140S1-16D		131 - 20	4
		191 - 64	
141D217G3	R88C1333-005	136 - 48	1
141D219G4		99 - 8	1
1427-512250	R83PA1427-512250	119 - 55	2
		120 - 58	
1429-522354	R83PA1429-522354	119 - 51	1
143D192P1	R88U0198-005-000	95 - 40	1
143001		160 - 27	2
143002	R17T4945	97 - 3	6
		100 - 24	
		160 - 23	
144D281G1	R88U0208-005	136 - 70	1
1444	R17SEAE1444	79 - 48	1
145-25-16	R45N2627-80	131 - 20	4
		191 - 64	
145S4-16D		131 - 38	6
		131 - 44	
		132 - 78	
		191 - 4	
145S7-16	R45C237-30	131 - 43	2
		132 - 77	
1452-048		14 -105	4
1452-054	R43N15022	41 - 3	2
1452-064		88 -	4
1452-126		18 - 15	4
148943		57 - 29	2
150L55		83 - 9	1
150S1-12D		131 - 18	4
		191 - 61	
150S1-6D	R45C4529-210	191 - 6	4
15151	R16S2302-350	127 - 3	4
		127 - 7	
15151-1		127 - 2	4
		127 - 6	
15183-5.3125S		94 - 54	1
15329-01.250		147 - 4	1
15329-5.250		125 - 33	1
15341		108 - 88	1
15341-1		109 - 66	1
15343		190 - 26	6
15343-1		190 - 25	6
155-25-12	R45N2627-70	131 - 18	4
		191 - 61	
155-25-8	R45N2627-60	191 - 6	4
155S4-12D	R45C4528-425	131 - 45	2
		191 - 5	
155S4-6D		131 - 26	4
155S4-8D	R45C4528-415	131 - 65	4
		132 - 63	
155S7-8	R45C237-10	131 -	4
		132 - 62	
15524-10	R42S25643-5-10	62 - 9	12
		69 - 7	
		135 -	
15524-12	R42S25643-5-12	62 - 10	12
		69 - 8	
		135 -	
15542-10	R42S25643-10	64 - 20	4
15542-12	R42S25643-12	64 - 21	4
157-01-000		132 - 29	3
15939-021-16		57 - 20	1
15939-049-25		57 - 21	1
1613-02-1	R88M0451-000-000	136 - 54	1
1616-06-128		136 - 55	1
16198-12-3.125		108 - 90	2
		109 - 69	
162-093-321	R88I2010-410-000	81 - 62	1
16274		67 - 17	5
163-010	R88C4000-000-000	137 - 30	3
		137 - 38	
163-012	R88P0861-000-000	137 - 40	2
		137 - 44	
163-0165		36 - 49	2
163-027	R88C4000-005-000	137 - 15	3
		137 - 23	
		137 - 49	
163-046	R88F0860-010-000	137 - 14	1
163-055-33	R88C0026-022-000	36 - 46	2
163-055-40	R88C0026-012-000	36 - 16	2
163-055-53	R88C0026-017-000	36 - 48	2
163-056-33	R88C0026-010-000	36 - 47	2
163-056-40	R88C0026-015-000	36 - 17	2
163-056-53	R88C0026-020-000	36 - 49	2
163-07	R88P0860-000-000	137 - 12	15
		137 - 20	
		137 - 25	
		137 - 27	
		137 - 34	
		137 - 36	
		137 - 40	
		137 - 42	
		137 - 44	

PART NUMBER	STOCK NUMBER	FIGURE & INDEX NO.	QTY. PER A/C
163-07		137 - 46	
163-088	R88P0860-005-000	137 - 13	15
		137 - 21	
		137 - 26	
		137 - 28	
		137 - 35	
		137 - 37	
		137 - 41	
		137 - 43	
		137 - 45	
		137 - 47	
163-089	R88C4000-010-000	137 - 16	3
		137 - 22	
		137 - 48	
163-095	R88C1294-197-000	36 - 42	2
1630	R17L11793-110-50	79 - 58	2
1637B		156 - 15	2
164-07	R88A0489-030-000	136 - 52	1
165-045-58[illegible]	R88U1068-250-000	119 - 58	1
165-045-582	R88U1068-252-000	121 - 42	1
165-047-581	R88U1068-254-000	120 - 11	1
165-079-578	R88U1068-256-000	36 - 21	2
165-079-579	R88U1068-258-000	36 - 57	2
165-085-577	R88U1068-260-000	36 - 20	2
165-2344		36 - 19	2
166-07-750		136 - 53	1
16893-10		69 - 72	10
		130 - 55	
		131 -135	
		131 -137	
16893-12		69 - 73	10
		130 - 56	
		131 -134	
		131 -136	
169A3		83 - 8	1
16946-10		131 - 63	7
		132 - 69	
16946-12		131 - 64	7
		132 - 70	
17-100-17-25	R83GPPI17-100-17-25	158 - 77	1
17-100-27-10	R83GPPI17-100-27-10	28 -145	4
17-100-4-10	R83GPPI17-100-4-10	28 - 98	4
		28 -105	
17-100-6-10	R83GPPI17-100-6-10	28 - 98	4
		28 -105	
17-100-6-23	R83GPPI17-100-6-23	28 - 2	4
17-100-67-10	R83GPPI17-100-67-10	70 - 37	1
178-1018-1000	R83HUG178-1018-1000	63 - 12	1
178-1018-600A		64 - 24	2
18050A02		90 - 21	1
18080-06		90 - 20	1
18090-1		90 - 23	1
18120-2		90 - 12	2
18140-2		90 - 14	1
18436-3		100 - 6	2
1963		187 - 24	1
19761-3		42 - 18	1
19762		103 - 27	1
19763		103 - 41	1
19764-8		42 - 15	1
2-1452-070		177 - 2	6
2DRE1409-4		138 - 18	1
2F1-6-17106		119 - 83	1
2F1-6-17109		120 -142	1
2F1-6-17112		121 - 65	1
2F1-6-18069-1		36 - 62	1
2F1-6-18069-2		36 - 62	1
2F1-6-18069-3		36 - 62	1
2F1-6-18069-4		36 - 62	1
2F1-6-18070-1		36 - 64	1
2F1-6-18070-2		36 - 64	1
2F1-6-18070-3		36 - 64	
2F1-6-18070-4		36 - 64	
20-100-50-10	R83GPPI20-100-50-10	71 - 40	2
200AC1/2	R33G1380-600	180 - 81	2
200AC10	R33WFRC200AC10	180 - 78	2
2003A2		167 - 73	2
201AC-3/8			1
201AC10	R33G400-250	51 - 29	137
		51 - 32	
		51 - 36	
		51 - 41	
		51 - 43	
		54 - 12	
		54 -	
201AC3/8		54 - 2	1
201AC5/16		120 - 86	4
		120 -104	
2012L6S		166 - 27	2
2012R6S		166 - 28	2
201983		178 - 19	2
202013		63 - 40	3
		63 - 86	
203-1600-3		191 - 20	1
203-1600-5		126 - 21	1
203-1600-7		126 - 15	1

PART NUMBER	STOCK NUMBER	FIGURE & INDEX NO.	QTY. PER A/C
203-1600-9		126 - 24	1
20300-102A100A1		76 - 6	1
205099	R17WK205099		248
2072	R17A2293	128 - 66	10
2088	R17YARD2088	128 - 69	16
2089	R17YARD2089	128 - 65	4
210B0 100-2			1
210B0100-1		135 - 35	1
212-16D		35 - 30	4
212-20D	R45S757-20	119 - 63	3
212-24D	R45S757-24D	119 -	22
		120 - 31	
		120 - 46	
		122 - 5	
		122 - 22	
		122 - 34	
		122 - 45	
212-32D	R45S757-30	120 - 88	20
		120 -	
		122 - 55	
212-40D	R45S757-35	122 - 62	4
21501	R82LA21501	57 - 18	1
2182-10	R17R1548	73 - 45	7
		74 - 65	
		81 - 60	
2182-11	R17R1033	73 - 46	3
		74 - 66	
2182-17	R17R1258-14	99 - 34	1
		137 -105	
2182-2		95 - 14	1
2182-5		99 - 33	1
2182-6	R17R1032	99 - 32	3
		136 - 74	
2182-7	R17R1029	20 - 19	16
		20 - 41	
		20 - 66	
		95 - 15	
		107 - 15	
2182-8	R17R1030	95 - 23	3
		136 - 73	
2182-9	R17R1031	95 - 16	2
22-1650-02	R43N95591	7 - 20	12
		7 - 21	
		59 - 18	
		113 - 22	
22A1-02			2
22A1-40			34
22A1-82			8
22A16-02	R43N68250		46
22A17-02	R43N91905		144
22A17-048	R43N91910		148
22A17-054	R43N91912		16
22A17-22-02			4
22A17-22-048			3
22A17-82	R43N91890		15
22A17A048			1
22A21-22-02	R43N94350		42
22A21-22-054	R43N67800		791
22A21-22-62	R43N94329		6
22A21-68-02	R43N94420		4
22A217-22-02	R43N94328-50		288
22A217-22-048	R43N94328-55		287
22A217-22-62	R43N94328-30		4
22A217-22-82	R43N94328-40		2
22A24-02	R43N91700-530		37
22A27-22-02	R43N94245		41
22A27-22-048			4
22A35-02	R43N70300		82
22A41-02			2647
22A41-82			22
22A47-02			136
22A5-02	R43N67850		596
22A5-048	R43N67860		87
22A5-054	R43N67870		18
22A5-070			12
22A5-62	R43N67825		1
22A5-82	R43N67835		4
22A8-040			3
22C2-02	R43N95426		4
22C3-02	R43N95428		165
22C3-62	R43N95404		1
22C302			1
22C4-02			4
22FS1032		46 -	6
22FT428		164 - 5	20
		180 - 70	
22FT524		164 - 23	2
22FT624		164 - 16	6
		164 - 23	
22FT720	R43N98200-30	164 - 2	2
22G1-02-10			32FT
22G1-02-12			6FT
22G1-02-14			52FT
22G1-02-16			20FT
22G1-02-18			3FT
22G1-02-5			2FT

PART NUMBER	STOCK NUMBER	FIGURE & INDEX NO.	QTY. PER A/C
22G1-02-6			9FT
22G1-02-7			15FT
22G1-02-8			61FT
22G1-048-10			21FT
22G1-048-14			2FT
22G1-048-16			22FT
22G1-048-7			7FT
22G1-048-8			20FT
22G1-054-8			1FT
22G1-064-10			14FT
22G12-02-10			16FT
22G12-02-12			18IN
22G12-02-6			2FT
22G12-02-7			21IN
22G12-02-8			46FT
22G5-02-10			3FT
22G5-02-12			2FT
22G5-02-14			6IN
22G5-02-6			4FT
22G5-02-7			4FT
22G5-02-8			5FT
22G5-048-12			3FT
22G5-048-8			4FT
22K1-62			2
22NA1-40	R43EN22NA1-40		107
22NG5-02J10			3FT
22NG5-02J12			2FT
22NG5-02J14			6FT
22NG5-02J6			15IN
22NG5-02J7			8IN
22NG5-02J8			16IN
22NKA1-02			200
22NKA1-048			240
22TA1-048			14
22032-2.664		66 - 5	1
22084-2.664SH		66 - 5	1
22350	R83PC22350	94 - 37	1
230-20274	R83WH230-20274	36 - 13	5
		121 - 30	
		161 - 4	
		162 - 8	
23104-3B-B		146 -126	2
2355A		185 - 85	1
2356A		180 - 71	2
2383916-500		180 - 98	2
24X5.5		184 - 42	2
		184 - 43	
24900	R83HYRM24900	28 -129	4
26205-054			4
270-8	R17P4436-898-20	102 - 30	1
295018	R43W280565	4 -	10
		18 -	
		107 - 9	
295246-10A			2
295246-12A			1
295246-12B			1
295246-14A			1
295246-16A			5
295246-16C			1
295246-20A		93 - 2	1
295246-22B			47
295246-24A			1
295246-24C			1
295246-36C	R33G1688-20		3
295246-40B			1
299A4BB		62 - 2	19
		64 - 11	
		69 - 3	
		69 - 16	
		70 - 41	
		130 - 43	
		135 - 6	
		135 - 17	
		135 - 67	
3-1549-3-26		104 - 35	3
		137 - 19	
3DRE1409		59 - 24	4
3DRE1409-4		138 - 43	2
3F5-140-3		18 - 14	4
3F5-170-8		107 - 8	1
3F7-170-4		4 -	2
3M14-4-4	R43S392879-5	79 -	20
3M20RA10		140 - 12	11
3M20RA11			4
3M20RA11-5		18 - 7	10
3M20RA5-5			12
3M20RA6			12
3M20R16		110 - 16	2
3M20SA10			60
3M20SA11			16
3M20SA12		129 - 46	3
3M20SA6			4
3M20SA7			2
3M21RA10		18 - 6	116
3M21RA11			2
3M21RA11-5			4

PART NUMBER	STOCK NUMBER	FIGURE & INDEX NO.	QTY. PER A/C
3M21RA12			8
3M21RA12-5			4
3M21RA13			8
3M21RA14			6
3M21RA14-5			12
3M21RA15			8
3M21RA15-5			8
3M21RA16-5			4
3M21RA17			4
3M21RA20			2
3M21SA10			3
3M21SA21			10
3M21SA7			8
3M21S12		88 - 7	2
3M21S12			2
3M22RA10-5			6
3M22RA11			18
3M22RA11-5		18 - 5	1108
3M22RA12			40
3M22RA13			6
3M22RA13-5			2
3M22RA14			2
3M22RA14-5		18 - 32	8
3M22RA15			2
3M22RA16			2
3M22SA11			36
3M22SA12			26
3M22SA13			2
3M22SA13-5			2
3M22SA14			2
3M22SA14-5			8
3M22SA15			2
3M22SA16			2
3M23RA12			8
3M23RA14			4
3M23RA14-5			6
3M23RA15-5			2
3M23RA22			2
3M23RA22-5			2
3M23RA30-5			2
3M23SA14-5			4
3M23SA15-5			2
3M23SA22			2
3M23SA22-5			2
3M23SA30-5			2
3M23SA42		177 - 2	6
3M24A16			4
3M24RA15-5			8
3M24RA16			4
3M24RA20			4
3M24RA23			2
3M24RA24			2
3M24RA25			4
3M24RA27			2
3M24RA30			4
3M24RA31			6
3M24RA32			4
3M24RA33			8
3M24RA34			4
3M24RA35			4
3M24RA36			8
3M24RA40			14
3M24RA41			10
3M24RA42			4
3M24RA43			2
3M24SA24		14 - 48	6
3M24SA25		14 - 38	2
3M24SA26		14 - 49	2
3M24SA27		14 - 37	4
3M24SA31		14 - 36	12
3M24SA32		14 - 35	12
3M24SA33		14 - 51	16
3M24SA34		14 - 34	8
3M24SA35		14 - 53	8
3M24SA36		14 - 33	12
3M24SA37		14 - 32	12
3M24SA40		14 - 55	6
3M24SA41		14 - 31	6
3M24SA42		14 - 66	2
3M24SA43		14 - 65	4
3M24SA47		177 - 1	4
3M25RA16			4
3M25RA20			4
3M25RA22			4
3M25RA24			2
3M25RA25			6
3M25RA26			2
3M25SA17		14 - 45	4
3M25SA20		14 - 41	4
3M25SA21		14 - 46	4
3M25SA23		14 - 40	8
3M25SA24		14 - 75	8
3M25SA25		14 - 39	1
3M25SA26		14 - 74	20
3M25SA27		14 - 81	4

PART NUMBER	STOCK NUMBER	FIGURE & INDEX NO.	QTY. PER A/C
3M25SA30		14 - 73	4
3M26RA16			8
3M26RA17			4
3M30M3-3			618
3M30M3-4			98
3M30M4-11			24
3M30M4-13			105
3M30M4-14			20
3M30M4-4			201
3M30M4-5			1003
3M30M4-6			72
3M30M4-7			4
3M30M5-5			43
3M30M5-6			267
3M30M5-7			125
3M30M5-8			6
3M30M5-9			2
3M6-3-12	R82MDA3M6-3-12	23 - 29	6
3M6-3-20		53 - 71	2
3M6-3-5		178 - 47	2
3M6-3-6		183 - 20	3
30X7.7		178 - 74	4
		178 - 75	
30548	R17T3670-278		5
30635			2
30661	R17T3627-25		9
31-100-015		63 - 85	2
310E	R17ESC0310E	136 - 62	3
		136 - 63	
		136 - 64	
3100ES20-33S		102 - 52	2
		102 - 53	
3106BS10SL3S		34 - 6	27
		34 - 7	
		34 - 22	
		102 - 17	
		102 - 18	
		102 - 56	
		104 - 5	
		104 - 19	
		104 - 20	
		137 - 31	
		137 - 32	
		137 - 51	
		137 - 61	
		137 - 62	
		137 - 72	
		160 - 5	
		160 - 8	
		160 - 10	
		160 - 15	
3106BS10SL4S		89 - 2	15
		89 - 8	
		103 - 39	
		104 - 1	
		104 - 2	
		104 - 69	
		104 - 75	
		137 - 63	
		160 - 6	
		160 - 7	
		160 - 11	
		178 - 8	
3106BS12S3P		193 - 2	6
3106BS12S3S		34 - 23	21
		137 - 11	
		137 - 24	
		137 - 33	
		137 - 64	
		137 - 89	
		193 - 7	
3106BS14S1S		104 - 3	1
3106BS14S2P		42 - 16	4
		103 - 16	
		104 - 59	
		104 - 82	
3106BS14S2S		34 - 3	32
		34 - 14	
		39 - 39	
		102 - 8	
		102 - 19	
		102 - 20	
		102 - 21	
		102 - 22	
		102 - 25	
		104 - 7	
		104 - 10	
		137 - 65	
		137 - 74	
		137 - 75	
		137 - 76	
		137 - 78	
		137 - 88	
		160 - 4	
		193 - 1	
		193 - 9	

PART NUMBER	STOCK NUMBER	FIGURE & INDEX NO.	QTY. PER A/C
3106BS14S2S		193 - 11	
3106BS14S5P		103 - 40	5
		103 - 54	
		137 - 84	
		193 - 6	
3106BS14S5S		102 - 7	7
		103 - 45	
		104 - 27	
		104 - 36	
		104 - 60	
		137 - 73	
		177 - 51	
3106BS14S5SX		42 - 19	1
3106BS14S6S		137 - 77	1
3106BS14S7P		137 - 85	1
3106BS14S7S		89 - 7	1
		160 - 1	
3106BS14S9S		104 - 13	1
3106BS16-11S		104 - 61	1
		104 - 62	
3106BS16S1P		102 - 41	5
		102 - 46	
		103 - 15	
		104 - 14	
		193 - 5	
3106BS16S1S		98 - 37	13
		102 - 23	
		102 - 35	
		103 - 57	
		104 - 4	
		104 - 8	
		104 - 34	
		104 - 83	
		137 - 90	
		193 - 10	
3106BS16S8S		104 - 32	6
		104 - 33	
		104 - 49	
		104 - 74	
		137 - 71	
3106BS16S9S		193 - 4	1
3106BS18-1P		103 - 43	6165
		104 - 15	
		104 - 37	
		104 - 57	
		177 - 53	
3106BS18-1S		102 - 6	6
		102 - 26	
		102 - 27	
		102 - 54	
		137 - 99	
3106BS18-11S		104 - 28	1
3106BS18-12S		102 - 11	1
3106BS18-9S		102 - 43	1
3106BS20-15S		42 - 21	1
3106BS20-18P		42 - 25	1
3106BS20-18S		42 - 24	1
3106BS20-27P		42 - 17	3
		103 - 46	
3106BS20-27S		102 - 37	4
		103 - 17	
		103 - 44	
		103 - 55	
		104 - 29	
		104 - 71	
3106BS20-29S		104 - 50	1
3106BS20-33S		102 - 33	1
3106BS20-4S		102 - 45	1
3106BS20-7S		102 - 31	1
3106BS22-14P		75 - 23	4
		104 - 79	
		104 - 87	
		104 - 88	
3106BS22-14PW		104 - 9	2
		104 - 77	
3106BS22-14PZ		104 - 78	1
3106BS22-14S		102 - 1	12
		102 - 15	
		102 - 55	
		102 - 58	
		102 - 61	
		103 - 50	
		104 - 38	
		137 - 95	
		137 -100	
		160 - 13	
3106BS22-14SX		103 - 48	2
		137 -101	
3106BS22-19P		150 - 1	1
3106BS24-28P		81 - 3	4
		102 - 62	
		104 - 81	
3106BS24-28S		102 - 2	8
		102 - 28	
		102 - 34	
		102 - 64	

PART NUMBER	STOCK NUMBER	FIGURE & INDEX NO.	QTY. PER A/C
3106BS24-28S		103 - 4	
		103 - 49	
		104 - 80	
3106BS24-28SW		102 - 34	2
3106BS24-5S		104 - 39	1
3106BS24-7S		104 - 40	1
3106BS28-12S		103 - 47	3
3106BS28-12SW		98 - 14	1
3106BS28-15P		81 - 4	3
		104 - 84	
3106BS28-15PW		104 - 30	1
3106BS28-15PX		104 - 89	1
3106BS28-15S		102 - 3	4
		104 - 12	
		104 - 90	
3106BS28-17P		42 - 20	1
3106BS28-21S		103 - 49	1
3106BS32-13P		42 - 23	1
3106BS32-13S		42 - 22	1
3106BS8S1P		104 - 35	2
		137 - 19	
31134	R17T3620-25		4
31136	R17T3621-25		3
312-10H32		18 - 24	12
312515		28 -143	4
312735		130 - 45	2
		135 - 51	
31878	R17T3649-37		227
31879			2
31882	R17T3649-43		1444
31884			2
31888	R17T3649-47		362
31889	R17T3610-120	86 - 25	1407
31892	R17T3570		10
31893	R17T3649-51		19
31896	R17T3580		8
31898	R17T3649-21		24
31899	R17T3649-48		30
31900	R17T3552-80		105
31904	R17T3552-60		4
31908	R17T3552-70		1
32-1452-048		119 -	12
		120 -	
32-1452-054		44 - 21	10
		87 - 11	
		178 - 6	
32-1452-064		107 - 1	6
32-1452-164		108 -121	2
321022			21
32440	R17T3662-50		18
32445	R17T4530		12
32543	R17T3552-84-10	84 -	76
32544	R17T3552-85		52
32545	R17T3552-86		3
32547	R17T3552-88		7
326-62-481S		184 - 33	2
3280		67 - 1	2
33KDD5		166 - 21	18
		166 - 23	
3300	R17E13041-100	99 - 13	1
350B1A	R83AADC350B1A	130 - 33	2
		135 - 54	
35203	R17S12116-5		1592
35206	R17S11999-25		68
35209	R17S12116-10		6
3583-526		102 - 39	1
36XP13-1		81 - 20	1
36XP13-11		77 - 2	2
36XP13-13		81 - 21	1
36XP13-2		74 - 8	1
36XP13-3		82 - 37	2
36XP13-4		76 - 2	1
36XP13-41		78 - 3	1
36XP13-5		80 - 9	1
36XP13-50		74 - 9	10
		76 - 2	
		77 - 3	
		78 - 2	
		78 - 3	
		80 - 7	
		80 - 9	
		81 - 22	
		82 - 37	
36XP13-6		80 - 8	1
36XP13-8		78 - 2	2
3600-02	R43N94345		548
3600-048			853
3600-054			268
3600-064			14
3600-2-02	R43N93030-30		4448
3600-2-048	R43-3600-2-048		2304
3600-2-82	R43N93030-20		99
3610-02			29
3610-048			106
36101-2-2		54 - 95	1
361072		53 - 66	1

PART NUMBER	STOCK NUMBER	FIGURE & INDEX NO.	QTY. PER A/C
36410XF13-313		82 - 37	1
36410XP13-313		74 - 10	5
		76 - 2	
		77 - 4	
		78 - 2	
		78 - 3	
		80 - 6	
		80 - 9	
		81 - 76	
366F1032			2
3700-02			28
3710-02			8
38000-3	R17ESSX38000-3	152 - 27	2
4AT4	R17S33047	74 - 59	2
4M23A10		50 -	156
4M23A10L			16
4M23A416			54
4M23A416L			16
4M23A516			40
4M23A516L			4
4M23A616			4
4M23A716			8
4M30-10-064			2
4M30-10-069			1
4M30-10-125			4
4M30A10-032	R82MDA4M30A10-032		170
4M30A10-064	R82MDA4M30A10-064		585
4M30A10-125	R82MDA4M30A10-125		221
4M30A416-032	R82MDA4M30A416-032		170
4M30A416-037			5
4M30A416-064	R82MDA4M30A416-064		171
4M30A416-125	R82MDA4M30A416-125		193
4M30A516-032			60
4M30A516-064			114
4M30A516-125			501
4M30A616-032			105
4M30A616-064			355
4M30A616-125	R82MDA4M30A616-125		160
4M30A816-032			37
4M30A816-125			14
4M30B10-032	R82MDA4M30B10-032		13
4M30B10-064	R82MDA4M30B10-064		75
4M30B10-125	R82MDA4M30B10-125		52
4M30B416-032	R82MDA4M30B416-032		133
4M30B416-064	R82MDA4M416-064		222
4M30B416-125	R83MDA4M30P416-125		353
4M30B516-064			4
4M30B516-125			12
4M30C10-032	R82MDA4M30C10-032		186
4M30C10-064	R82MDA4M30C10-064		251
4M30C10-125	R82MDA4M30C10-125		170
4M30C416-032	R43MDA4M30C416-032		22
4M30C416-064	R43MDA4M30C416-064		40
4M30C416-125	R82MDA4M30C416-125		32
4M30C516-125			4
4M30C616-032			6
4M30C616-125			12
4M30C716-032	R82MDA4M30C716-032		4
4M30C716-125	R82MDA4M30C716-125		27
4M30C816-125			12
4M30D10-032	R43MDA4M30D10-032		1591
4M30D10-064	R82MDA4M30D10-064		3213
4M30D10-125	R82MDA4M30D13-125		2986
4M30D416-032	R43MDA4M30D416-032		792
4M30D416-064	R43W110340-416		1273
4M30D416-125	R82MDA4M30D416-125		1326
4M30D516-032	R82MDA4M30D516-032		68
4M30D516-064	R82MDA4M30D516-064		195
4M30D516-125	R82MDA4M30D516-125		281
4M30D616-032	R43MDA4M30D616-032		253
4M30D616-064	R82MDA4M30D616-064		17
4M30D616-125	R82MDA4M30D616-125		56
4M30E10-064			4
4M30E416-032	R82MDA4M30E416-032		141
4M30E416-064	R43MDA4M30E416-064		76
4M30E416-125	R82MDA4M30E416-125		149
4M30E516-032	R82MDA4M30E516-032		6
4M30E516-064	R82MDA4M30E516-064		4
4M30E516-125	R82MDA4M30E516-125		12
4M33-10-012		189 - 31	2
4M33-14-012		140 - 42	4
4M33-14-101		179 - 18	4
4M33-14-105		189 - 24	2
4M33-18-005		25 - 14	16
4M33-18-113		185 -102	2
4M33-18-26		144 - 25	1
4M33-26-031		185 - 8	2
4M33-5-105		56 - 11	1
4M33-5-124		32 - 8	4
4M33-6-005		23 - 52	8
4M33-6-106		32 - 23	4
4M33-8-012	*R46S1232	37 - 28	2
4M33-8-018		18 -112	20
4M33A7-015		90 -	1
4M33P10-007		185 - 27	2
4M33P10-014		164 - 26	4

* INDICATES MAKE FROM

PART NUMBER	STOCK NUMBER	FIGURE & INDEX NO.	QTY. PER A/C
4M33P10-030		23 - 32	8
4M33P11-009		157 - 38	4
4M33P14-018		183 - 25	2
4M33P16-006		185 - 50	2
4M33P16-009		189 - 13	2
4M33P16-010		189 - 20	4
4M33P16-022		75 - 35	3
4M33P18-009		185 - 51	2
4M33P18-026		144 - 31	4
4M33P3-103		56 - 5	1
4M33P3-105		56 - 12	1
4M33P4-109		56 - 13	1
4M33P6-006		23 - 53	4
4M33P6-009		156 - 17	4
4M33P6-013		63 -	1
4M33P7-008		164 - 25	2
4M33P7-027		74 -	1
4M33P7-031		166 -	4
4M33P8-008		164 - 25	2
4M33P8-009		23 - 33	4
4M33P8-108		95 - 11	1
4M34-10-50		185 - 14	4
4M34-12-100		180 -105	4
4M34-12-119		18 -	4
4M34-14-60		141 -	4
4M34-14-65		189 - 4	1
4M34-14-95		189 - 23	2
4M34-18-140		185 -101	2
4M34-4-14		9 - 6	33
4M34-4-16		39 -	1
4M34-4-31		26 -	4
4M34-5-15		146 -	4
4M34-5-18		140 - 28	1
4M34-5-23		54 - 52	3
4M34-5-27		54 - 51	1
4M34-6-33		47 -	2
4M34-6-48		184 -	2
4M34-6-56		146 -	2
4M34-6-60		180 - 30	4
4M34-7-15		183 -	8
4M34-8-32		185 - 98	2
4M34-8-42		185 - 13	2
4M34-8-53		4 -	8
4M34P10-12		24 -	2
4M34P10-15		23 - 10	4
4M34P10-22		185 - 28	2
4M34P11-27		189 - 14	2
4M34P11-29		185 - 19	2
4M34P14-100		180 - 32	4
4M34P14-14		185 - 18	4
4M34P14-16		180 - 92	4
4M34P14-25		185 - 49	4
4M34P14-27		185 - 68	4
4M34P14-49		183 - 26	2
4M34P16-30		189 - 6	4
4M34P16-33		180 - 22	8
4M34P18-27		185 - 69	4
4M34P20-114		140 - 41	2
4M34P20-32		178 - 59	4
4M34P22-19		185 -103	2
4M34P24-19		185 -104	2
4M34P24-25		185 -105	2
4M34P7-14		52 - 37	2
4M34P7-50		23 - 54	4
4M34P7-62		178 - 50	4
4M34P7-88		189 - 22	4
4M34P8-100		95 - 12	2
4M34P8-23		50 -	2
4M34P8-31		23 - 14	8
4M34P8-47		188 - 2	4
4M34P8-50		182 - 7	4
4M34P8-55		188 - 4	4
4M34P9-100		188 - 10	2
4M34P9-12		23 - 11	4
4M34P9-21		178 - 60	4
4M34P9-29		23 - 15	2
4M34P9-45		180 - 23	4
4M36-01001			1
4M36-01002	R43MDA4M36-01002		2
4M36-01004			2
4M36-01005		73 - 18	3
4M36-01006		156 - 32	5
4M36-01012		128 - 34	4
4M36-01015	R43MDA4M36-01015	65 - 40	163
4M36-01016	R43MDA4M36-01016	85 - 29	3
4M36-01018		45 - 54	2
4M36-01023			4
4M36-01024			1
4M36-01027			18
4M36-01028			142
4M36-01032			94
4M36-02001		46 - 25	49
4M36-02003			12
4M36-02004		55 -101	5
4M36-02005			2
4M36-02006		21 - 3	26

PART NUMBER	STOCK NUMBER	FIGURE & INDEX NO.	QTY. PER A/C
4M36-02007		101 - 48	2
4M36-02008			16
4M36-02009		91 - 25	5
4M36-02013			24
4M36-02014	R43MDA4M36-02014	32 - 25	10
4M36-02015		43 - 8	4
4M36-02025		6 - 12	6
4M36-02026		32 - 26	8
4M36-02027		6 - 10	22
4M36-02030		55 -	1
4M36-02031		107 - 19	1
4M36-02034		55 - 98	46
4M36-02036		110 - 23	4
4M36-02037		185 - 39	1
4M36-02038			2
4M36-02039		146 -103	8
4M36-02056		46 -136	4
4M36-03002	R43MDA4M36-03002	73 - 15	9
4M36-03003	R43MDA4M36-03003	8 - 20	19
4M36-03004		73 - 25	8
4M36-03006			16
4M36-03009		23 - 3	8
4M36-03010			40
4M36-03011		21 - 11	2
4M36-03012	R43MDA4M36-03012	28 - 88	4
4M36-03015		189 - 2	2
4M36-03016			8
4M36-03017		126 - 23	1
4M36-03019	R43MDA4M36-03019	29 - 6	4
4M36-03020		184 - 8	1
4M36-04001			16
4M36-04005		11 - 2	36
4M36-04009		101 - 54	3
4M36-04013			2
4M36-04015		2 - 8	14
4M36-04016		146 - 53	12
4M36-04019		184 - 31	2
4M36-05001		184 - 30	1
4M36-05002		14 - 6	12
4M36-05005		29 - 8	7
4M36-05006		28 - 42	2
4M36-05008		29 - 29	4
4M36-05009	R43MDA4M36-05009	45 - 25	6
4M36-05010		45 - 24	12
4M36-05011			4
4M36-05016		16 - 6	20
4M36-06004		16 - 5	36
4M36-06007		24 - 5	9
4M36-06008	R43MDA4M36-06008		4
4M36-07002	R43MDA4M36-07002	184 - 48	4
4M36-07003		13 - 6	2
4M36-07005		2 - 9	4
4M36-07006		2 - 9	4
4M36-07008		13 - 6	3
4M36-07009			4
4M36-10002		14 - 5	12
4M36-10004		134 - 9	1
4M36-10006		31 - 6	6
4M36-10007		10 - 2	4
4M36-10008		10 - 2	2
4M36-1004			4
4M36-11001		179 - 3	2
4M36-11002	R43MDA4M36-11002	179 - 3	2
4M36-11004		144 - 9	1
4M36-11005			3
4M36-11006		98 - 4	5
4M36-11009		185 - 40	3
4M36-13005		12 - 12	4
4M36-13006		57 - 41	3
4M36-13007		101 - 19	3
4M36-13008			2
4M36-14003	R43MDA4M36-14003	29 - 12	4
4M36-15001		186 - 11	1
4M36-15003		145 - 12	2
4M36-16003		98 - 6	1
4M37-125	R43MDA4M37-125		37
4M44P4-11			2
400213-0	R17MAL400213-0	136 - 3	1
4010-18		136 -	
4021	R16A917-100	95 - 37	1
413001	R17F14278-44	97 - 23	2
	R17F14247		
416-12-5		36 - 53	2
416-2		36 - 52	2
416-3M		36 - 54	2
42A5-064			12
42FW428	R43N96272-5	164 - 9	4
42FW524	R43N96272-10	164 - 1	4
		164 - 9	
42FW624	R43N96272-15	164 - 17	4
42172-3.214M4		126 - 12	2
42535-1.250SH	R42C22272-20	147 - 5	1
42535-5.250S	R42C22272-75	125 - 32	1
42737-2.500		66 - 5	1
42990-2.686M4	R42MAR42990-2.686M4	125 - 5	1
42990-2.945M4		191 - 13	2

PART NUMBER	STOCK NUMBER	FIGURE & INDEX NO.	QTY. PER A/C
42990-3.187M4	R42MAR42990-3.187M4	65 - 20	11
		66 - 7	
		125 - 9	
		191 - 30	
42990-3.427M4		191 - 32	2
42990-3.535M4		191 - 10	3
42990-3.697M4		191 - 11	3
42990-4.151M4		191 - 14	2
43-100-45-10		158 - 76	2
436A10			10
436A12			4
436A13			15
436A14			1
436A15			3
436A16			3
436A26			3
436A4			1
436A5			23
436A6			9
436A7			14
436A9			9
437S12			3
437S50		65 - 21	1
438A3-12-2-10			1
438A7-14-2-8			3
43980		65 - 14	1
4426-750S		134 - 1	4
443-7-2-8			3
45202		95 - 21	1
45204	R88T2798-080-000	42 - 11	2
		95 - 46	
45206			1
45208		81 - 25	1
4521-16		191 - 73	42
		192 -	
4521-17			1
4521-22		191 - 87	44
		192 -	
4521-4			22
4521-f			27
45210		95 - 22	1
4630-8		126 - 13	2
4790		81 - 36	1
4860-2		131 - 8	2
		131 - 53	
49A233H1		174 - 5	2
		174 - 6	
49194	R16R2505	98 - 12	1
49300	R86AIR49300	128 - 30	1
49630	R86AIR49630	129 - 71	1
5M11-3			2
5M12-18			1
5M12-20			1
5M12-24			1
5M12-28			2
5M13-12	R17MDA5M13-12	103 - 28	2
5M13-16	R17MDA5M13-16	103 - 51	3
5M13-4		101 - 43	4
5M13-6			2
5M13-8		13 - 8	2
5M14-10-10		13 - 22	2
5M14-10-9		13 - 36	2
5M5-4		120 -125	2
5M5D4		120 - 7	1
5M6-1	R82MDA5M6-1	86 - 36	5
5M6-2	R82MDA5M6-2	101 - 30	1
5M6-3		85 - 18	14
5M6-4		73 - 35	1
5M7-10-1		34 - 18	6
5M7-10-10		95 - 90	4
5M7-10-11		137 - 67	1
5M7-10-14	RP439-457	101 - 1	2
5M7-10-2	R17P439-443	34 - 10	10
5M7-10-3	R17P439-444	34 - 9	10
5M7-10-4	R17P439-445	98 - 18	3
5M7-10-5			3
5M7-10-6	R17P439-447	42 - 43	8
5M7-10-7		101 - 8	3
5M7-10-8	R17P439-450	95 - 62	6
5M8-10-1		34 - 18	6
5M8-10-10		95 - 90	5
5M8-10-11		137 - 68	1
5M8-10-14		101 - 1	3
5M8-10-2	R17MDA5M8-10-2	34 - 10	10
5M8-10-3		34 - 9	6
5M8-10-4	R17MDA5M8-10-4	98 - 19	4
5M8-10-5			7
5M8-10-6		13 - 24	11
5M8-10-7		101 - 8	3
5M8-10-8		95 - 63	6
5M9-032-2		84 - 11	44
5NBC713ZP		32 - 49	8
50-1294-000	R83AS50-1294-000	122 - 71	1
50A1A3	R17BUA50A1A3	74 - 41	2
		80 - 16	
50A30B1	R88I1208-000	81 - 65	1

PART NUMBER	STOCK NUMBER	FIGURE & INDEX NO.	QTY. PER A/C
50A45A1	R88I2600-000	81 - 52	1
50A56C1	R88T1985-000	190 - 17	1
50C404	R83VCH50C404	95 - 92	1
50067	R83PUP50067	135 - 63	3
50839	R83PUP50839	126 - 14	1
51A1B23		96 - 4	1
513325	R83PC513325	94 - 53	1
5160-534024-16		130 - 86	1
5160-534024-4		130 - 83	4
		135 -126	
5160-534024-6		135 -127	2
519E840G1	R88A0554-045-000	95 - 87	1
52-022-094-0438	R42P11415-5	152 - 14	2
52-022-094-0500		18 -	22
		20 -	
52-022-094-0625		12 - 26	4
52-022-094-0750		155 - 1	1
52-022-094-0875			1
52-022-094-1125		108 -	1
52-022-094-1625		91 - 37	1
52-022-099-0875		168 - 27	1
52-028-125-0500		46 -150	1
52-028-125-0625	R42P11415-10	73 - 22	2
52-028-125-0687		167 - 28	2
52-028-125-0875		32 - 21	5
52-028-125-0938	R42P11415-15	32 - 6	4
52-028-125-1000	R42P11415-20	82 - 16	7
52-028-125-1125		167 - 17	1
52-028-125-1250		168 - 2	3
52-028-125-1375		45 -	2
52-032-156-0500		151 - 24	1
52-032-156-0562	R42P11416-156-0562	53 - 42	3
		180 -	
52-032-156-1000		91 - 39	1
52-032-156-1125		91 - 35	1
52-032-156-1250		52 - 13	4
52-032-156-1500		52 - 14	3
52-040-187-1125		180 - 47	2
52-040-187-1250	R42P11420-1250	168 - 47	4
52-040-187-1375		18 -	8
52-048-219-2000		168 - 41	8
		168 - 46	
52-048-250-1000	R42P11421-1000	43 - 15	1
52-048-250-1125	R42P11421-1125	43 - 30	4
52-048-250-1250		95 - 3	2
52-048-250-1500	R42P11421-1500	43 - 10	1
52-062-312-1500		52 - 8	3
52-094-500-0475		114 - 27	1
52-1650-02	R43N95591-1000	53 - 10	14
		75 - 20	
52A1C27-3		79 - 46	1
52A3A101		95 - 70	1
52A3A312-5		136 - 34	4
52A5-070			28
52A5-080			8
52B181-1	R17T5865-103-50	94 - 1	2
52101-1	R17GE52101-1	95 - 70	1
527A5-048			2
53C159	R83VCH53C159	95 - 91	1
550FV	R82LA550FV	57 - 19	2
55000-5.25	R83PC55000-5.25	94 - 57	1
59000-5		63 - 26	12
59000-6		173 - 2	8
		173 - 11	
		173 - 17	
		173 - 25	
598-1	R42C18252-34		2
598-3	R42C18252-37		2
6AS8	R17MCS6AS8	73 - 34	1
6NBF817		6 - 3	12
		6 - 11	
6NBK919YZP		168 - 32	1
6000	R88U0120-000-000	84 - 18	42
	R88U0121-000-000		
		101 -	
		103 -	
		105 - 8	
		105 - 11	
		105 - 38	
		105 - 54	
		105 - 60	
6001	R16W1055	105 - 24	16
		105 - 37	
		105 - 63	
		105 - 65	
		105 - 72	
6042H31		136 - 22	2
		136 - 23	
6042H38		136 - 24	1
6042H39		128 - 53	1
60924	R17ESC060924	136 - 65	6
61E480-3		190 - 8	1
6144-10		27 - 9	152
		27 - 22	
		28 - 54	
		29 - 32	

PART NUMBER	STOCK NUMBER	FIGURE & INDEX NO.	QTY. PER A/C
6144-10		187 - 29	
6144-12		11 - 15	137
		24 - 11	
		30 - 9	
6144-13		29 - 37	8
6144-14		110 - 39	10
		157 - 8	
6144-17		30 - 14	20
		31 - 9	
6144-19		24 - 17	17
		31 - 14	
		144 - 15	
		187 - 13	
6144-23		12 - 20	4
6144-25		29 - 15	12
		157 - 4	
6144-26		24 - 13	4
6144-27		145 - 15	4
		186 - 21	
6144-29		29 - 20	4
6144-31		186 - 16	2
6144-32		12 - 24	12
		145 - 22	
6144-35		144 - 20	2
6144-38		145 - 18	4
6144-7		110 - 41	28
6144-9		110 - 37	14
		181 - 15	
		181 - 27	
6256		134 - 15	4
		134 - 38	
63F567-1		190 - 9	1
6400A23A1A4	R88I1936-025-000	82 - 28	1
6550-1		72 - 14	4
66WA600-2		190 - 5	2
6600EW064			4
6600EW098			10
6610EW098			12
668-3		42 - 32	1
6732		98 - 25	3FT
		98 - 25	
6737	R17A1193-100	98 - 32	4FT
674-3FR257			4
674225		95 - 35	1
6742405		136 - 71	1
6772		98 - 26	7FT
		98 - 26	
		98 - 33	
68A5-82	R43N67535		3
6800-02	R43R1985		2
6800-048	R43N1987		12
6800-054	R43R1995		8
6800-064	R43R2000		4
6800-080			3
68000	R17ESSX68000	75 - 21	1
6810-064			4
6820-02			6
69000	R88S2280-005-000	118 - 47	1
69000-1	R88S2280-010-000	35 - 53	2
6950S06-6			8
6951S06-6			28
7M12D4		28 - 30	6
7M12D6			2
7M14D4	R82MDA7M14D4	28 - 22	24
7M14D5		181 - 31	2
7M14D6			4
7M15C4			24
7M15C6			4
7M18D4		28 - 28	12
7M18D5		181 - 9	2
7M30-4			2
7M30-4D			2
7M34-4D			4
7M7D4	R82MDA7M7D4	28 - 29	38
7M7D5	R82MDA7M7D5	57 - 28	5
7M7D6		129 - 62	1
7M8D4			47
7M8D5		181 - 17	7
7M8D6	R82MDA7M8D6		5
7M9C4			23
7M9C5		181 - 14	3
7M9C6	R82MDA7M9C6		1
70G175		99 - 18	1
70G317G2	R17GE70G317G2	99 - 24	1
70000-20		63 - 71	3
		135 - 70	
71000-1	R17ESSX71000-2	78 - 8	1
71000-2		77 - 7	3
714487-1		74 - 12	2
		74 - 14	
72-100-1-25		130 - 17	1
7201/506			546
7201/510			132
7201/514			2
7201/607			2509
7201/611			46

PART NUMBER	STOCK NUMBER	FIGURE & INDEX NO.	QTY. PER A/C
723		100 - 15	8
725-16H32			4
7400-1	R88S2250-007-200	95 - 56	1
74000-11		89 - 9	1
74000-3	R17ESSX74000-3	87 - 15	1
74000-5	R17ESSX74000-5	89 - 11	1
74000-7		87 - 14	1
74000-9		89 - 10	1
754-12-2-8AF	R42C18079-12	36 - 27	3
754-24-2-10AF	R43C18079-90-24		1
754-24-2-8AF	R42C18079-24	36 - 26	6
754-28-2-8AF	R42C18079-28		2
754-32-2-8AF			2
754-36-2-10AF	R42C18079-90-36		2
754-4-2-8AF			2
754-6-2-8AF	R42C18079-6		10
754-8-2-8AF	R42C18079-8		10
755-16-2-8AF			2
755-20-2-8AF	R42C18080-20	36 - 24	10
		36 - 25	
7600-23A5-4	R88T2651-255-000	135 - 15	2
77M1P8T	R16S6187	105 - 95	8
		105 - 96	
78RS4		76 - 8	3
789-28AF	R42C18148-28		1
79-014-062-0500	R42P11418-15	172 - 4	4
79-022-094-0625		94 - 33	1
79-022-094-0750	R42P11418-20	94 - 40	1
79-022-094-0937		73 - 29	1
79-022-094-0938		94 - 45	11
79-028-125-0438	R42P11418-30	94 - 42	1
79-028-125-1000		124 - 15	2
79-032-156-2000		172 - 10	4
79-040-187-0500	R42P11418-5-0500	53 - 78	2
79-040-187-0688		46 -	1
79-040-187-0812	R42P11418-5	73 - 30	1
79-040-187-1250		75 - 33	15
		170 - 1	
79-048-250-1500		185 - 23	1
79-048-250-2750	R42P11419-5-2750	185 - 95	1
790051		169 - 2	2
790052		169 - 10	2
790053		169 - 17	2
790054		169 - 24	2
8-1050-2	R83PA8-1050-2	119 - 53	2
		120 - 55	
8-850-22	R82PA8-850-22	119 - 52	2
		120 - 54	
8DJ50GAH1		76 - 3	1
8NBF1021		6 - 1	30
		6 - 9	
		21 - 5	
		21 - 9	
		21 - 16	
		21 - 20	
801120	R17WK801120	192 - 9	10
801616	R17WK801616	192 - 1	22
		192 - 2	
		192 - 3	
		192 - 4	
8127C	R83RYY-8127C	126 - 6	2
814024		83 - 20	1
82			2
82-100-070		70 - 49	3
		135 - 73	
		135 - 75	
82-100-113		62 - 23	1
8271K3		79 - 28	2
83020	R17AITR83020	128 - 38	5
		193 - 12	
83021	R17AITR83021	128 - 46	4
		193 - 13	
835A	R82LA835A	57 - 22	1
83760	R17AITR83760	128 - 32	2
		137 - 60	
83761	R17AITR83761	128 - 33	2
		137 - 59	
84000		120 - 35	1
840482		135 -	1
840485		135 - 8	1
840505		137 - 86	1
840542	R17WK840542	136 - 51	1
854972		83 - 2	1
854973		83 - 3	1
854976		83 - 5	1
854977		83 - 6	1
854980		83 - 7	1
855811		83 - 4	1
86225		66 - 9	1
863-1		70 - 71	3
		132 - 49	
86418-1		136 -	
870447		54 - 81	3
		70 - 43	
		85 - 1	
870468		178 - 18	2

PART NUMBER	STOCK NUMBER	FIGURE & INDEX NO.	QTY. PER A/C
870525		62 - 6	1
870533		69 - 6	1
870535		135 - 19	2
870724		135 - 11	2
870833		69 - 71	1
870838		64 - 19	2
8730-518216	R83PA8730-518216	120 - 39	1
8736		47 - 49	44
8749K11	R17S28254-47-290	79 - 14	1
875337			1
881-12S		131 -	6
		191 -	
8918K663	R17CUT8918K663	81 - 45	1
9M103-10	R82MDA9M103-10	31 - 4	7
9M103-12	R82MDA9M103-12	144 - 6	2
9M103-22	R82MDA9M103-22	145 - 8	2
9M103-4	R82MDA9M103-4	110 - 31	4
9M103-5		154 - 10	1
9M103-6	R82MDA9M103-6	30 - 4	7
9M103-8	R82MDA9M103-8	24 - 2	4
9M103-9	R82MDA9M103-9	153 - 3	2
9M104-10		31 - 3	5
9M104-12		144 - 7	1
9M104-22		145 - 7	2
9M104-6		30 - 3	7
9M104-8		24 - 3	4
9M104-9		153 - 4	2
9M22-10-12			5
9M22-14-16			8
9M22-18-20			4
9M22-6-8			7
9M26-12-0060		92 - 10	1
9M26-12-0115		92 - 11	1
9M26-4-0037		56 -	1
9M26-8-0095		152 - 24	2
9M26-8-0100		124 - 14	1
9M27HX1-604		114 - 37	1
9M27HX3A400		43 - 45	4
9M27HY1A400	*R42MDA9M27H1A7200	43 - 44	4
9M27HY2-604		114 - 36	1
9M27HY2A840		114 - 16	2
9M27HY3A400	*R42MDA9M27H1A7200	20 - 10	2
9M27H1A955		39 - 36	2
		39 - 37	
9M29-7-1	*R33G1680		2
9M31-1			2
9M34-1-1-14			2
9M34-1-1-8			1
9M34-1-9-16			1
9M34-2-1-5			1
9M34-2-1-9			1
9M34-2-10-15			1
9M34-2-16-19			1
9M34-2-6-10			1
9M34A-1-1-6			1
9M34A1-1-10			5
9M34A1-1-11			1
9M34A1-1-14			1
9M34A1-1-2			9
9M34A1-1-3			11
9M34A1-1-4			2
9M34A1-1-6			8
9M34A1-1-7			3
9M34A1-1-8			4
9M34A1-1-9			2
9M34A1-10-19			2
9M34A1-12-15			1
9M34A1-16-23			1
9M34A1-17-24			2
9M34A1-3-4			1
9M34A1-4-6			1
9M34A1-9-16			2
9M34A2-1-2			1
9M34A2-1-4			1
9M34A2-1-6			2
9M34A2-1-9			1
9M34A2-10-15			1
9M34A2-16-19			1
9M34A2-7-12			1
9M34A3-1-2			2
9M34H2-1-10			1
9M38-1			7
9M39-2			6
9M45-1		73 -	2
9M47-12ATT796		176 - 7	2
9M54-1			153
9M54-1-10			5
9M54-1-10L			92
9M54-1-10R			82
9M55-1A1400			2
9M55-1A1848			2
9M55-1A1978			1
9M55-1A2057			2
9M55-1A2260			2
9M55-1A2600			2
9M55-1A350			2

* INDICATES MAKE FROM

PART NUMBER	STOCK NUMBER	FIGURE & INDEX NO.	QTY. PER A/C
9M55-1A510			2
9M55-1A6025			1
9M55-1A690			2
9M55-1A731		4 - 4	2
9M55-1A735			2
9M55-1A740			2
9M55-1A870			2
9M55-1A981			2
9M55-1B948			2
9M55-2A1529			2
9M55-2A2260			2
9M55-2A2300			2
9M55-2A2842			2
9M55-2A3240			4
9M55-2A521			2
9M55-2A836			2
9M55-2A961			2
9M55-2B1050		46 -133	2
9M55A		5 - 3	41FT
9M55B		46 - 3	4FT
9M57HX3A311		177 - 21	2
9M57HX3A435		112 - 13	1
9M57HX3A436		177 - 22	2
9M57HX3A505		112 - 8	1
9M57HX3A796		176 - 6	2
9M57HY3A429		177 - 17	2
9M57HY3A435		112 - 14	1
9M57HY3A505		112 - 7	2
9M57HY4A790		4 - 2	2
9M57HY5A552		177 - 9	2
9M57H1A10175		37 - 45	2
9M57H2A9900		37 - 34	2
9M57H3A1993		177 - 19	2
9M57H3A4370		177 - 7	2
9M57H3A4469		177 - 30	2
9M57H5A1993		177 - 10	2
9M57H6A4469		177 - 31	2
9M58C0			AR
9M58C0A			AR
9M58C3			AR
9M58E0A			AR
9M58F			AR
9M58F0			AR
9M58F11			AR
9M58F12			AR
9M58F13			AR
9M58F14			AR
9M58F15			AR
9M58F16			AR
9M58F2			AR
9M58F26			AR
9M58F27			AR
9M58F28			AR
9M58F29			AR
9M58F3			AR
9M58F30			AR
9M58F34			AR
9M58F35			AR
9M58F36			AR
9M58F39			AR
9M58F4			AR
9M58F40			AR
9M58F43			AR
9M58F48			AR
9M58F49			AR
9M58F5			AR
9M58F50			AR
9M58F55			AR
9M58F59			AR
9M58F6			AR
9M58F60			AR
9M58F7			AR
9M58F71			AR
9M58F73			AR
9M58F74			AR
9M58F75			AR
9M58F76			AR
9M58F78			AR
9M58F79			AR
9M58F8			AR
9M58F80			AR
9M58F83			AR
9M58F84			AR
9M58F85			AR
9M58F86			AR
9M58F87			AR
9M58F9			AR
9M58F90			AR
9M58F91			AR
9M58F93			AR
9M58G1			AR
9M58G10			AR
9M58G11			AR
9M58G13			AR

PART NUMBER	STOCK NUMBER	FIGURE & INDEX NO.	QTY. PER A/C
9M58G14			AR
9M58G15			AR
9M58G18			AR
9M58G20			AR
9M58G21			AR
9M58G22			AR
9M58G23			AR
9M58G27			AR
9M58G28			AR
9M58G29			AR
9M58G3			AR
9M58G6			AR
9M58G8			AR
9M58J0			AR
9M58J0A			AR
9M58K0			AR
9M58P1			AR
9M58P10			AR
9M58P3			AR
9M58P5			AR
9M58P6			AR
9M58P7			AR
9M5868			AR
9M60B3		141 - 18	50
9M60B5		141 - 17	18
9M61B1		50 - 1	395
9M62A1	R42F1606-1	141 - 17	37
9M68B365-390		50 - 1	26
9M68B365-440		139 - 34	28
9M68B435-510		111 - 1	255
9M68B495-520		175 - 3	2
9M68B495-570		112 - 27	2
9M68B555-630		112 - 28	4
9M68B615-690		112 - 30	4
9M70-3	R42F1608-3	184 -	54
9M70B2	R42MDA9M70B2	50 - 1	106
9M70B3		111 - 2	289
9M7102-60A3348			2
9M7102-80A1060			2
9M7102-85A2961			2
9M7102-99A1080			2
9M7102A		46 - 71	20FT
9M73-1-012		112 - 3	68
9M73-1-020		50 - 1	51
9M73-1-032		111 - 5	24
9M73-1-040	R42F1615-40	138 - 34	4
9M73-1-051		112 - 2	20
9M73-1-064		111 - 1	319
9M73-2N091	R42F1616	111 - 17	192
9M78B	*R33E1000	18 - 65	3FT
9M79-25A359		114 - 11	1
9M79-25A509		114 - 12	1
9M79-31B1112		107 - 17	1
9M79-31B513		43 - 47	2
9M79-32B588		43 - 46	1
9M79-33B2014		107 - 16	1
9M79-38A370		114 - 10	1
9M79-39B518		141 - 36	4
9M79-49B547		43 - 53	4
9M79-50B1128		141 - 52	2
9M79-58A293		108 - 81	1
9M79-58B557		141 - 37	2
9M79-60B2225		45 - 60	1
9M79-65B582		43 - 52	4
9M79-88A1828		114 - 40	1
9M79-90A1610		108 - 82	1
9M79-99A1962		114 - 21	1
9M79A	R33E1000-25	108 - 83	6FT
9M79B	R33E1000-50	5 - 9	21FT
9M82H2AX5820		46 - 4	2
9M82H2A5927		48 - 1	2
9M83HX2A1923		113 - 6	1
9M83HX2A400		109 - 21	1
9M83HX4A650		108 - 54	1
9M83HY2A3915		111 - 13	2
9M83HY2A6406		138 - 11	2
9M83HY4A400		109 - 20	1
9M83HY4A650		108 - 55	1
9M83H2A2500		111 - 24	2
9M83H2A2994		111 - 19	2
9M83H2A340		141 - 48	2
9M83H2A394		111 - 25	4
9M83H2A558		141 - 32	2
9M83H3-3184		112 - 32	2
9M83H4A5247		111 - 4	1
9M83H4A558		141 - 33	2
9M84HX3A400		20 -	1
9M84HX3A424		20 -	1
9M84H4A1649		113 - 5	1
9M85HX2A300		18 - 52	4
9M85HY2A300		18 -	4
9M88H1AX1090		113 - 12	1
9M88H2AX994		113 - 11	1
9M9101-10			1

* INDICATES MAKE FROM

PART NUMBER	STOCK NUMBER	FIGURE & INDEX NO.	QTY. PER A/C
9M9102-2A	R82MDA9M9102-2A	47 -131	1
9000-2		166 -	4
900390-24		122 - 37	2
9032-48	R82RYY9032-48	126 - 7	2
9048-1	R17R5677-173	136 - 28	2
		136 - 29	
9056-24	R82RYY9056-24	134 - 14	4
		134 - 37	
9100F	R16SFW9100F	98 - 34	1
920AL900-10		177 - 55	2
920AL900-14		137 - 4	2
920AL900-19		101 - 2	4
920AL900-23		101 - 19	3
920AL900-28		98 - 7	1
920AL900-33		125 - 5	1
920AL900-37		191 - 13	2
920AL900-40		65 - 19	12
		66 - 7	
		125 - 9	
		191 - 30	
920AL900-44		191 - 32	2
920AL900-46		191 - 10	2
920AL900-50		191 - 11	3
920AL900-55		191 - 14	2
92482-0200	R83AIR92482-0200	93 - 14	1
926E8	R16BHE926E8	105 - 91	4
926622-24		119 - 43	8
		120 - 33	
		120 - 48	
		122 - 3	
		122 - 25	
926623-32		119 - 62	1
9300-80B	R17C9232-9	97 - 27	1
9531013	R82GY9531013	184 - 41	1
9531032	R82GY9531032	178 - 73	2
9540784	R82GY9540784	178 - 76	2
9565H5	R17R5901-55	95 - 66	1
9565H82	R17CUT9565H82	100 - 43	1
9565H88	R17CUT9565H88	100 - 39	1
97-18-1P		56 - 7	1
97-18-1S		56 - 17	1
9714-24D		120 - 46	7
		122 - 7	
		122 - 21	
		122 - 33	
9714-32D		120 - 88	9
		120 -108	
		122 - 54	
9714-40-32D		120 -106	2
9714-40D		122 - 61	2
9720-16D		35 - 29	2
9745-24D		119 -	14
		120 - 31	
		122 - 4	
		122 - 24	
		122 - 36	
		122 - 44	
9745-32-20D		119 - 63	1
9760-18	R17C4770-25	137 -109	2
9790-40D		122 - 64	2
98265-1-.130	R42F24075-18	176 - 5	6
98265-1-.140	R42F24075-20	5 - 4	18
		39 - 36	
98265-1-.150	R42F24075-22	111 - 10	97
		111 - 18	
		111 - 23	
		139 - 10	
98265-2-.170	R42F24075-23-110	39 - 34	6
		109 -	
98265-2-.180	R42F24075-23-120	111 - 17	8
		111 - 22	
98265-2-.190	R42F24075-23-130	43 - 51	12
		111 - 9	
98265-2-.200	R42F24075-23-140	39 - 35	1
98265-2-.220	R42F24075-23-160	43 - 43	15
		111 - 8	
98265-3-.270	R42F24075-23-300	113 - 1	14
		113 - 1	
98265-3-.290	R42F24075-23-320	177 - 29	8
98265-3-.310	R42F24075-23-340	20 - 8	10
		177 - 13	
98265-3-.340		176 - 4	6
		177 - 14	
98265-3-.390		177 - 6	4
98265-4-.420	R42F24075-23-440	113 - 2	6
98265-5-.460		177 - 15	2
98292-1-.120	R42F24125	74 - 2	25
		74 - 4	
		79 - 2	
		79 - 4	
		95 - 31	
98292-1-.130	R42F24126	73 - 4	6
98292-2-.110		95 - 29	1
98292-2-.170	R42F24130	84 - 6	6
98292-2-.230	R42F24140-25	84 - 5	4
98292-2-.250	R42F24140-50	73 -	2

PART NUMBER	STOCK NUMBER	FIGURE & INDEX NO.	QTY. PER A/C
98292-3-.260		95 - 30	1
98292-3-.270	R42F24140-70	166 - 25	2
98292-3-.330	R42F24140-121	166 -	4
98477		119 -	12
		120 -	
98479		107 - 1	2
98533		18 - 15	4
98535		108 -121	2
9860-3		73 - 41	1
99797P.130	R42F24025-505	4 -	3
99799	R42F24020-40	4 -	2
99833P.130	R42F24030-200	18 - 14	187
		43 - 43	
		43 - 51	
		50 - 27	
		50 - 30	
		50 - 31	
		50 - 32	
		50 - 33	
		74 - 2	
		74 - 4	
		79 - 2	
		79 - 4	
		84 - 5	
		84 - 6	
		96 - 20	
		107 - 8	
		141 - 14	
99836	R42F24020-100	5 - 4	268
		18 -	
		20 -	
		39 -	
		43 -	
		50 - 28	
		50 - 30	
		50 - 31	
		50 - 32	
		50 - 33	
		73 -	
		74 -	
		79 -	
		84 -	
		95 -	
		107 - 10	
		107 -	
		109 -	
		111 -	
		112 -	
		113 -	
		139 -	
		141 -	
		166 -	
		176 -	
		177 -	
99851-045			8
99851-100	R43S802220-100		6
99851-110			2
99851-115			2
99851-120	R43S802220-120		4
99851-15	R42S802220-15		8
99851-20	R43S802220-20		25
99851-30	R43S802220-30		2
99851-40	R43S802220-40		2
99851-45	R43S802220-45		4
99851-50	R43S802220-50		8
99851-55	R43S802220-55		10
99851-60	R43S802220-60		9
99851-65	R43S802220-65		14
99851-70	R43S802220-70		4
99851-75			1
99851-95			3
99947P.130	R42F24020-1100	5 - 4	578
		20 - 8	
		39 - 33	
		39 - 34	
		39 - 35	
		50 - 1	
		50 - 3	
		73 - 4	
		73 -	
		95 - 29	
		95 - 30	
		95 - 31	
		107 - 22	
		109 -	
		111 - 1	
		111 - 5	
		111 - 6	
		111 - 7	
		111 - 8	
		111 - 9	
		111 - 10	
		111 - 14	
		111 - 15	
		111 - 16	
		111 - 17	

PART NUMBER	STOCK NUMBER	FIGURE & INDEX NO.	QTY. PER A/C
9994 7P.130		111 - 18	
		111 - 20	
		111 - 21	
		111 - 22	
		111 - 23	
		112 - 2	
		112 - 3	
		112 - 4	
		112 - 5	
		112 - 18	
		112 - 19	
		112 - 20	
		112 - 21	
		112 - 22	
		112 - 23	
		112 - 24	
		112 - 25	
		112 - 26	
		112 - 27	
		112 - 28	
		112 - 29	
		112 - 30	
		112 - 31	
		113 - 2	
		138 - 10	
		138 - 34	
		138 - 35	
		138 - 36	
		138 - 37	
		138 - 41	
		138 - 42	
		138 - 43	
		166 - 25	
		166 -	
		175 - 2	
		175 - 3	
		175 - 4	
		176 - 4	
		176 - 5	
		177 - 6	
		177 - 13	
		177 - 14	
		177 - 15	
		177 - 29	

PART NUMBER	STOCK NUMBER	FIGURE & INDEX NO.	QTY. PER A/C
	53 155		
FOR DAS BELLOW			